SHOTGUN 650

ROYAL ENFIELD SERVICE MANUAL

REST OF THE WORLD

This page is intentionally left blank

Foreword

Congratulations and welcome to the Royal Enfield family.

As the manufacturer of the world's oldest motorcycle in continuous production, Royal Enfield has long been a canvas for customisation and personalisation for millions of riders across the world. The Shotgun 650 is our ode to the spirit of generations of riders who have challenged conventions and broken boundaries.

This custom-inspired roadster challenges every notion of what a Royal Enfield should be, while retaining everything that makes our machines a lesson in Pure Motorcycling. With a proven 648cc parallel twin engine and custom-inspired modular design, the Shotgun 650 is a motorcycle made for inspiration, experimentation and pure, unadulterated expression. Its low-slung riding dynamics and optimum ergonomics make it perfect for hustling down the highway and zipping through the city, so you can take your piece of art anywhere you want to go.

This manual is your friend, philosopher, and guide when it comes to taking care of your motorcycle. In the pages that follow, you will find ways of looking after your machine so that it remains a reliable partner in your travels and exploration for decades to come.

Please avail all scheduled services at your nearest Royal Enfield Authorised Service Centre, ensuring your ride gets the best care always. Do read through the terms and conditions of warranty and other useful information given in this manual before you ride.

"© Copyright 2023 Royal Enfield (a unit Eicher Motors limited). All rights reserved. No part of this service manual shall be copied, distributed or otherwise dealt without the express permission in written form the Royal Enfield who remains the sole owner of this manual.".

This page is intentionally left blank

TABLE OF CONTENTS

GENERAL INFORMATION 1

TECHNICAL SPECIFICATION 2

MAINTENANCE 3

GENERAL AND SPECIAL TOOLS 4

ENGINE 5

CHASSIS 6

FUEL SYSTEM 7

EVAPORATIVE EMISSION CONTROL SYSTEM (EVAP) 8

BRAKES AND ABS 9

ENGINE MANAGEMENT SYSTEM (EMS) 10

ELECTRICAL SYSTEM 11

SHOWA - USD SUSPENSION 12

INDEX AND GLOSSARY 13

CONTENTS **PAGE**

1. General Information 9

1.1 About this Manual 11

1.2 How to Use this Manual 12

1.3 Important Information 13

1.4 General Precautions 13

1.5 Prior to Service 14

2. Technical Specifications 22

2.1 Engine 24

2.2 Ignition System 24

2.3 Transmission 24

2.4 Chassis 25

2.5 Electrical System 25

2.6 Dimensions 26

2.7 Weights 26

2.8 Recommended Lubricants 26

3. Periodical Maintenance Schedule (PMS) 34

4. General and Special Tools 38

4.1 General Tools 40

4.2 Measurement Tools 43

4.3 Special Tools 44

5. ENGINE 50

5.1 Components Removal from Engine 50

5.2 Components Assembly on Engine 83

5.3 Engine Removal from Main Frame 129

5.4 Engine Assembly to Frame 160

5.5 Engine Dismantling 192

5.6 Engine Inspection 234

5.7 Journal Bearings Selection Chart 246

CONTENTS PAGE

5.8 Engine Assembly 254

5.9 Engine Troubleshooting 321

6. CHASSIS 342

6.1 Air Filter Box Assembly 344

6.2 Control Cables 354

6.3 Handlebar 372

6.4. Exhaust Pipes and Silencers 386

6.5. Footrests/Stands 397

6.6 Mudguards/Number Plates/Grab Handle 416

6.7 Side Panels and Rider Seat 429

6.8 Wheels 438

6.9 Suspension 464

6.10. Troubleshooting 495

7. Fuel System 509

7.1. Fuel System Components 514

8. Evaporative (EVAP) Emission Control System 519

8.1. Evaporative (EVAP) Emission Control System 526

9. Brakes and ABS 532

9.1. Brake - Front 543

9.2. Brake - Rear 547

9.3 Anti-lock Braking System (ABS) 566

9.4. Preparation (Front Disc Brake) 587

9.5. Reassembly 589

9.6. Preparation (Rear Disc Brake) 590

9.7. Reassembly 591

9.8. Brake Bleeding 592

CONTENTS **PAGE**

10. Engine Management System (EMS) 593

10.1 Engine Management System (EMS) 605

10.2 EMS Adaptation procedure 654

11. Electrical System 646

11.1 Battery Dismantling 646

11.2 Headlamp Dismantling 663

11.3 Tail Lamp Dismantling 649

11.4 Horn Dismantling 664

11.5 Complete Wiring Harness Removal 672

Inspection 674

Assembly 675

11.6 Complete Wiring Harness Assemble 675

11.7 Horn Assembly 678

11.8 Tail Lamp Assembly 678

11.9 Headlamp Assembly 682

11.10 Battery Assembly 687

11.1.1 Wiring Diagrams 692

12. Showa - USD SUSPENSION 688

13. Index 717

GENERAL INFORMATION

CONTENTS PAGE

1.1 About this Manual 11

1.2 How to Use this Manual 12

1.3 Important Information 13

1.4 General Precautions 13

1.5 Prior to Service 14

1. General Information

1.1 About this Manual

This service manual has been created primarily for use by a technically competent and trained service personnel to

- Get familiarized and understand the construction of various aggregates of motorcycles.
- Assist in carrying out the correct and factory-approved service and overhauling procedures of the motorcycles.

While it is not possible to comprehensively capture all the service practices in this manual, it is expected that the technically competent person would have a basic knowledge and understanding of carrying out systematic service and overhauling procedures.

We strongly recommend that personnel without basic understanding of repair techniques and procedures DO NOT attempt to service or overhaul any part of the motorcycle using this manual, as it might result in wrong diagnosis and repair and ultimately render the motorcycle unsafe for use and result in expensive repair costs for the customer.

We also STRONGLY recommend that any technician who wishes to service Royal Enfield motorcycles, undergo systematic technical trainings at our Royal Enfield training academies, where the correct servicing and overhauling procedures are imparted by experienced and competent trainers, providing hands on practical sessions.

Lastly, we would recommend and insist that the periodic maintenance and overhauling of the Royal Enfield motorcycles be carried out ONLY through authorized Royal Enfield service stations where factory trained and experienced service technicians are always available.

1.2 How to Use this Manual

This service manual is divided into several chapters as detailed below. This will help the technical personnel to easily refer to the particular section of interest, for carrying out the correct maintenance and repair procedure as recommended by Royal Enfield. **Click and explore on the blue icons to refer individual chapters.**

Chapter No.	Chapters
1	General Information
2	Technical Specifications
3	Periodic Maintenance Schedule
4	General Tools and Special Tools
5	Engine
6	Chassis
7	Fuel System
8	EVAP (Evaporative Emission Control System)
9	Brakes and ABS (Anti-Lock Braking System)
10	EMS (Engine Management System)
11	Electrical System
12	Index and Glossary

There are elaborate details of CAUTIONS, WARNINGS provided in this service manual in each of the individual chapters to highlight details of information and/or precautions that need to be taken while servicing the motorcycle aggregates.

1.3 Important Information

To enhance customer satisfaction and to improve the performance of the motorcycle, Royal Enfield will carrying out modifications and changes in the motorcycles in the years to come. Such changes will be intimated periodically and continuously through service bulletins and notifications to the authorized Royal Enfield dealers and service stations and will also be included in the future editions of this service manual.

1.4 General Precautions

Important information and points that need special focus and attention while servicing the motorcycles are highlighted in this service manual as follows:

NOTE	*Indicates points of particular interest for more efficient and convenient operation.*
WARNING	**Indicates points of particular interest for more efficient and convenient operation.**
CAUTION	**Alerts the technician about potential personal injury hazards.**

⚠ WARNING

Stop the engine when servicing the fuel system. Do not smoke or allow any open flame or sparks near gasoline. Gasoline is extremely flammable and highly explosive, which could result in serious injury or fatal accidents.

Do not use after-market parts which can adversely affect the performance. Removing or altering factory-installed parts can adversely affect performance and could result in serious injury or fatal accidents.

⚠ CAUTION

Do not tamper or attempt any modifications to any part of the engine management, fuel injection, ABS brakes, exhaust and evaporative emission systems of the motorcycle as it is against the law and will render the motorcycle unfit and illegal for road use.

1.5 Prior to Service

Proper preparation is very important before commencing any maintenance or repair on a motorcycle. This will not only result in an efficient and accurate repair job but will also save time and result in "FIRST TIME RIGHT" and help the customer gain confidence in the technician's capability.

The following points are essential for carrying out maintenance or repairs on a motorcycle correctly:

1. **Understand and record customer concerns accurately.**
2. **Test-ride the motorcycle wherever required to understand the customer concerns accurately.**
3. **Refer to the past history of maintenance and repairs carried out on the motorcycle.**
4. **Water-wash and clean the motorcycle.**
5. **Maintain the work area – cleanliness, lighting, ventilation, etc.**
6. **Store appropriate general purpose and special tools for carrying out the maintenance.**
7. **Perform systematic dismantling and reassembly of the aggregates in the motorcycle.**
8. **Store required spares and consumables for the maintenance.**
9. **Perform correct inspection and diagnosis of the motorcycle.**
10. **Test-ride after repairs to ensure that motorcycle is performing correctly.**
11. **Explain the repairs and maintenance carried out to the customer.**
12. **Encourage customer to take a test-ride so as to gain confidence that the repairs have been carried out correctly and to his satisfaction.**

1.5.1. Customer Complaints

Discuss with customer to clearly understand their concerns and issues on the motorcycle. Create a job card detailing all the complaints mentioned.

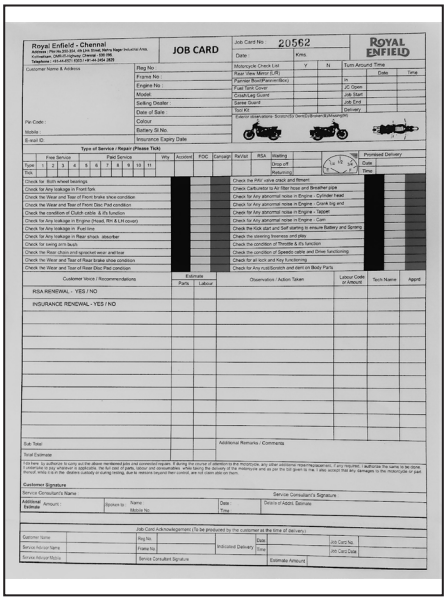

1.5.2. Test-Ride

Do a test ride wherever required to reconfirm issues mentioned by customer. This will also help to identify other issues if any.

1.5.3. Service Records

Check the service records.

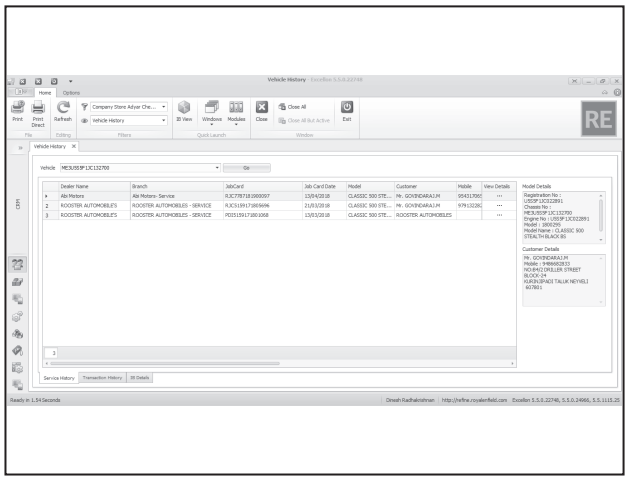

1.5.4. Clean Work Area

Ensure the work space is clean and adequately ventilated fresh air.

1.5.5. Cleaning

Cleaning before Dismantling and Inspection

Water-wash and clean the motorcycle for a thorough inspection to uncover any visual damages such as breakages, leaks, misalignments, etc., and to clearly understand the issues raised by the customer.

Clean the motorcycle thoroughly before disassembly to avoid dirt or other foreign materials entering into sealed areas as it can cause excessive wear and damage to the parts.

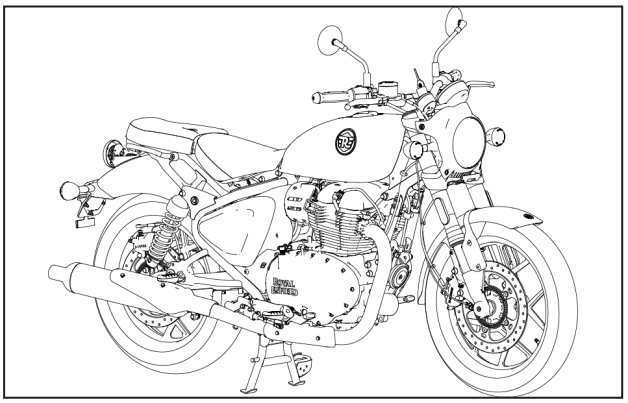

1.5.6. General and Special Tools

All general and special tools required for servicing are listed in the respective section of this service manual. Ensure that you have all the required tools for servicing. Place tools handy before beginning the service or maintenance.

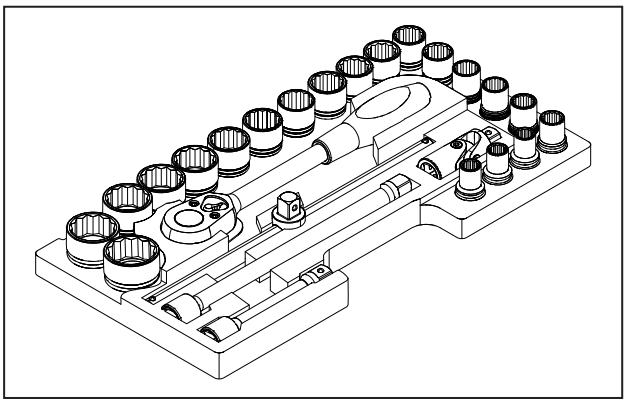

Special Tools

A list of special tools required for the dismantling and assembling of parts has been provided in each section.

Ensure that only Royal Enfield recommended special tools are used wherever mentioned. Dismantling or assembling without the use of special tools may cause severe, irreparable damage to parts.

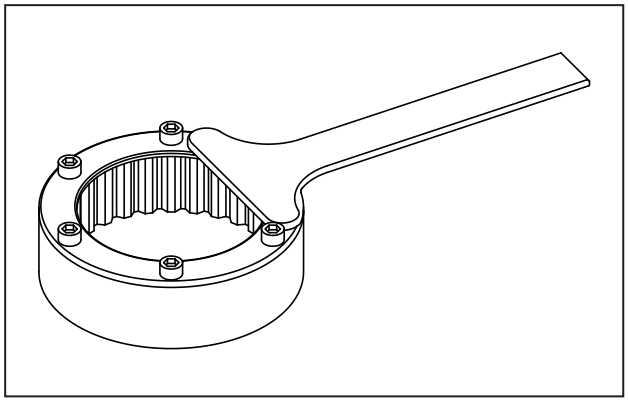

SPL	Part No: ST30266/a
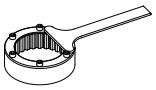	Part Name: Clutch holder

Storing Tools

After completing the job, ensure that all tools are cleaned and kept back in their designated place, so that they do not rust and can be easily found the next time.

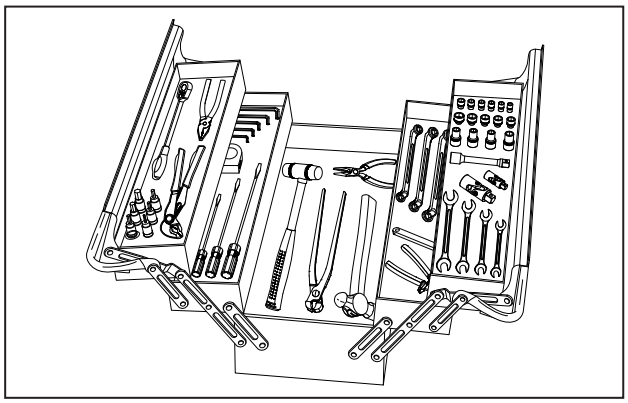

Tool Usage and Safety

Use eye protection equipment when performing any task using air-operated tools.

Pneumatic tools should be used only for removal, and not for tightening.

Ratchets and Extension

Use an extension on a ratchet's handle or power handle at suitable places.

Torque wrenches should always be used only for tightening fasteners to their recommended torque.

Once you hear the click sound, stop tightening and remove the torque wrench from the fastener. Do not tighten further as it will cause damage to torque wrench and fastener.

Hammers and Mallets

Use eye protection equipment and gloves while using a hammer.

Use a hammer or mallet that is suitable for the job.

Use only a plastic mallet to remove or assemble delicate parts like Oil seals/dowels/bushes, especially in the engine. DO NOT use a metal hammer as it will cause damage to the parts.

Screwdrivers

Use the right type and size of screwdriver at the right places.

Do not use a screwdriver for punching, chiseling or scraping, or as a lever to lift another object.

Use Ramp

Royal Enfield recommends the use of a suitable ramp to hold the motorcycle vertically in a convenient position for easy repairs.

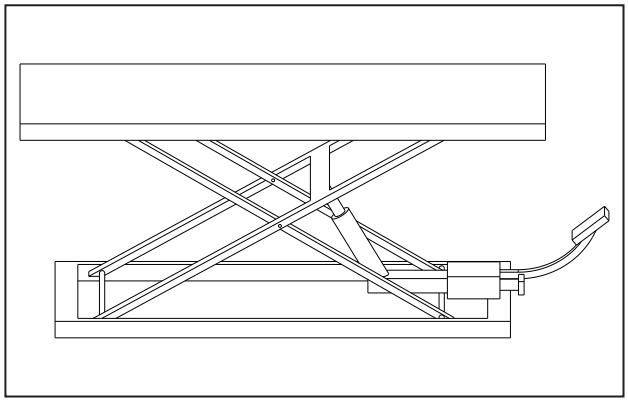

1.5.7. Prior to Disassembly

Always ensure ignition switch and stop switch are in OFF position before dismantling any aggregate on the motorcycle.

Always drain engine oil (in warm condition) whenever servicing any part of the engine/oil cooler.

Always drain fuel from the fuel tank whenever it is removed from the frame.

Always disconnect battery terminals whenever servicing the engine management system, ABS and/or any electrical wiring.

1.5.8. Disassembly/Assembly Sequence

Follow the disassembling and assembling sequence as given in the respective sections of this manual. In most cases assembly order is the reverse of disassembly. However, please follow the sequence provided in this service manual. If correct sequence is not followed, parts can be damaged.

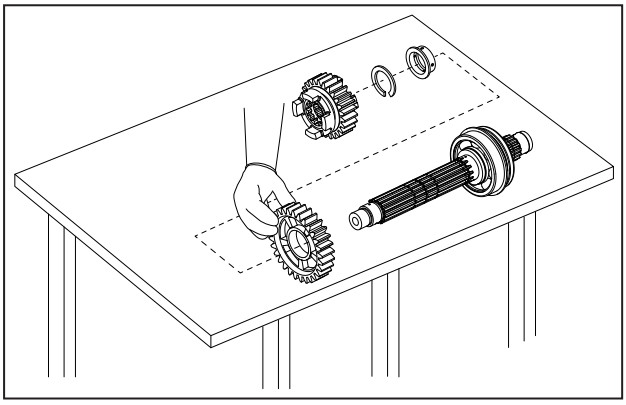

Removal of Bearings and Seals and fitting them in place

While removing bearings and seals, use correct tools mentioned in the relevant sections. Do not use excess force as it may damage parts. Similarly, while pressing bearings and seals in place lubricate them, use correct tools and visually examine if they are fitted in proper place. Bearings or seals should not be loose in the casing. Use of wrong tools, too much hammering or application of extra force may lead to damage of the bearings and seals.

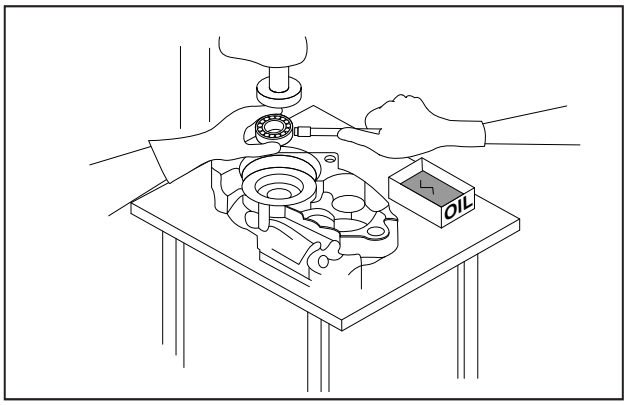

Lubrication

During assembly, ensure that all rotating and/or sliding parts are lubricated to minimize wear and tear during initial operation. Use Royal Enfield recommended oil and lubricants only. All brake system parts should be cleaned and lubricated with recommended brake fluid only (e.g., piston, MC, etc.).

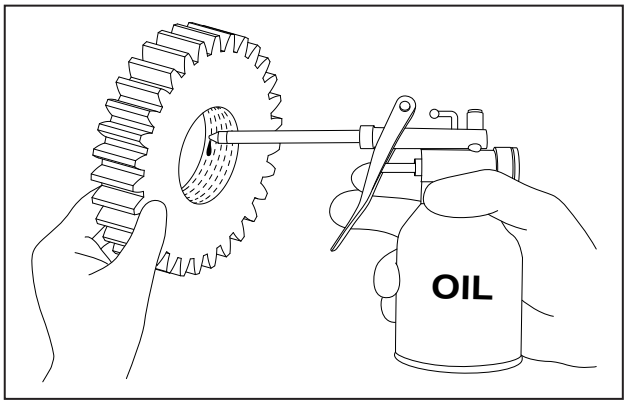

Tightening Sequence and Torque

The correct tightening sequence and torque has been provided in various sections of this service manual. Incorrect sequence or wrong torque will cause serious damage to parts.

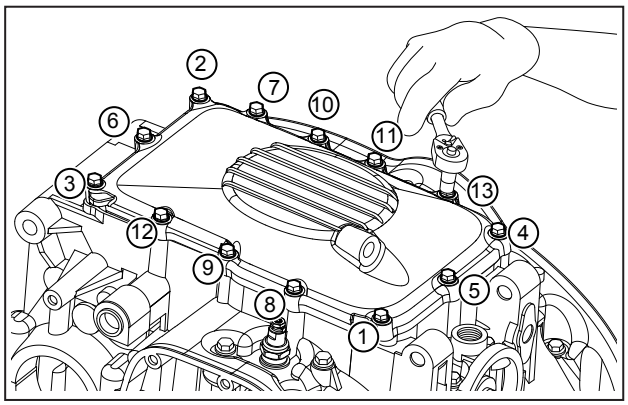

Battery Disconnection and Connection

When required, disconnect the battery cables from the battery. Disconnect the ground negative (−) terminal first and then positive (+) terminal to avoid short circuit. While connecting, first connect the positive (+) and then the negative (−) terminals.

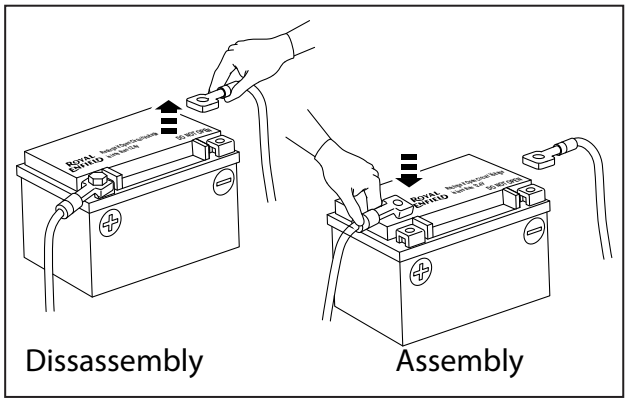

Electrical Connectors

Ensure that lock is released in the connectors before disconnecting or connecting electrical connectors. Excessive force to pull out connectors without releasing the lock may damage the connector.

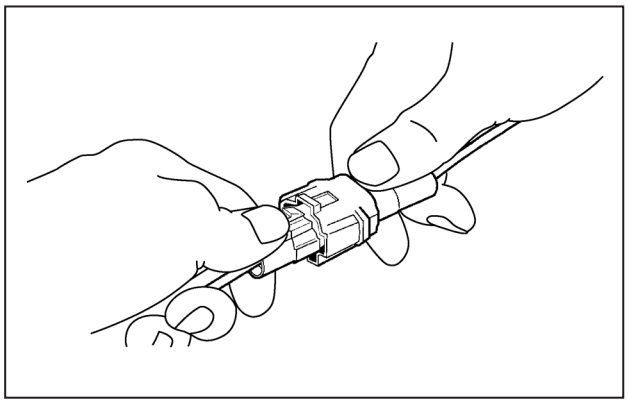

1.5.9. Safety

Ignition System

Ignition system produces high voltage. When working on any ignition system with the engine running, always keep your hands away from the spark plug wires.

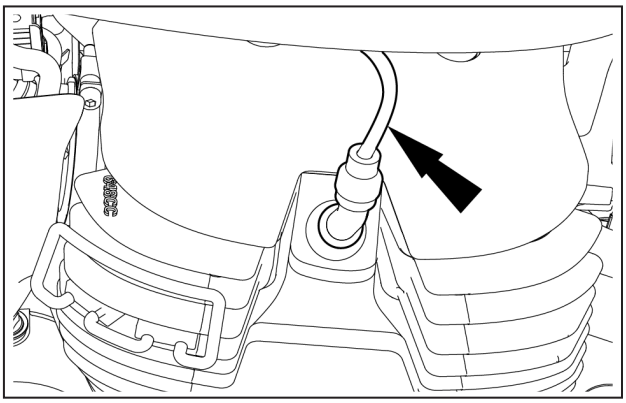

Handling Sharp-edged Parts

Wear hand gloves to prevent injury from possible sharp edges on the parts.

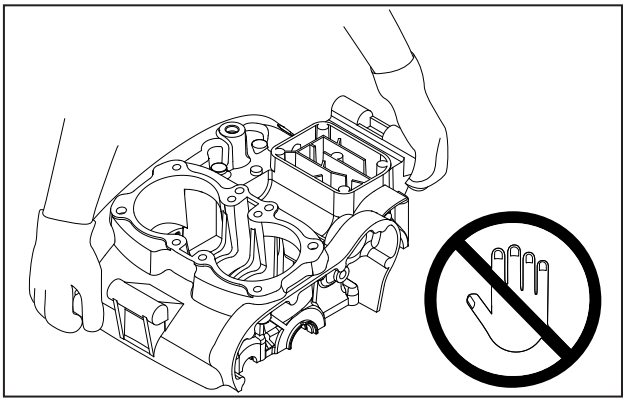

Handling Fragile Parts

Be careful while handling fragile parts like headlamp, indicator, bulb, etc. Use proper tools and do not apply undue force. After removing, store the parts in a safe place.

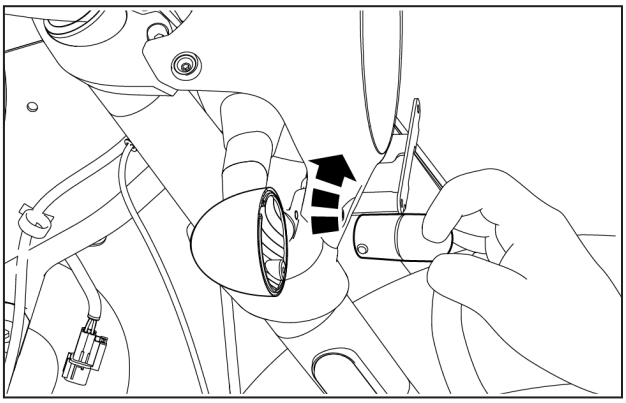

Welding

Royal Enfield does not recommend welding on the frame or any other parts of the motorcycle. Welding will make the frame weak and can also affect the balance of the motorcycle.

In motorcycles equipped with electronic control modules like EMS and ABS, welding will cause irreparable damage to the EMS/ABS system.

This will also void motorcycle warranty.

Tampering

It is illegal to tamper with the following:

a) Exhaust system
b) Fuel systems
c) Engine Number and/or VIN Information Plate
d) Wiring harness
e) Frame

This will lead to NON CONFORMANCE to the noise and emission regulations in force, causing serious performance issues besides irreparable damage to the motorcycle.

This will also void warranty of the motorcycle.

1.5.10. Storage of Removed Parts

After disassembly of all parts including sub-assemblies, clean and store them in a separate storage bin to prevent from dust and place the parts near the working area.

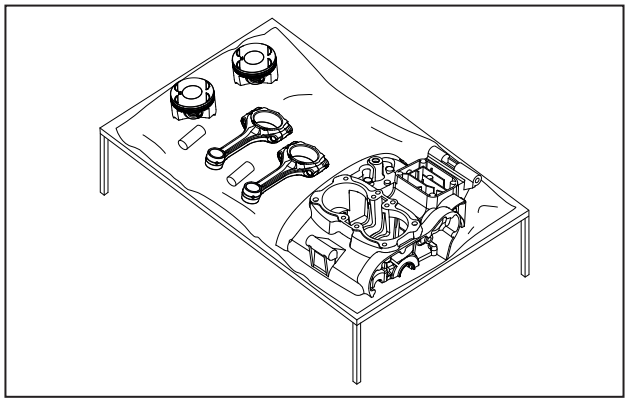

Protective Covers

Use proper covers on the motorcycle to avoid scratching/damaging paint during service.

⚠ CAUTION

Please Take care while disassembling and assembling the seats, and sheet metal parts, as any sharp edges will lead to injuries.

1.5.11. Inspection

Reuse of worn or damaged parts may lead to serious malfunction and/or unsafe operation of the motorcycle. All removed parts should be cleaned and visually inspected for wear-out, corrosion, discoloration, damage, etc. Refer to the appropriate sections of this manual for service limits on individual parts. If any wear or tear has been found or if the part is beyond its service limit, replace the parts with Royal Enfield Genuine parts.

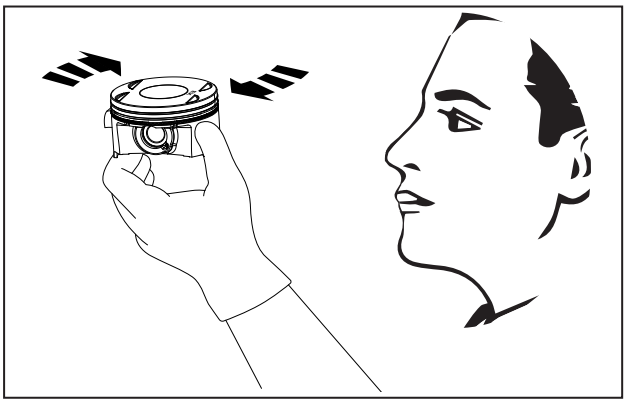

1.5.12. General

One-time Parts/Consumables

In the service manual, we have listed parts that are for one-time use only. Replace and do not reuse parts such as:

a) Oil seals
b) Filters
c) Gaskets
d) Rubber washers
e) Cylinder head bolts
f) Connecting rod bolts
g) Crankcase bolts
h) O - Rings

Spares/Lubricants/Consumables

Ensure that you have all the spares/lubricants/consumables required for the servicing of a particular section stored near you for easy access. Use only Royal Enfield Genuine parts.

ROYAL ENFIELD

Genuine Parts

Rust or Corrosion Removal

In case a rusted or corroded part cannot be removed, apply recommended/reputed rust removal agents, wait for the removal agent to free up the rust/corrosion and then remove the part. Clean and inspect the part carefully to confirm it can be reused.

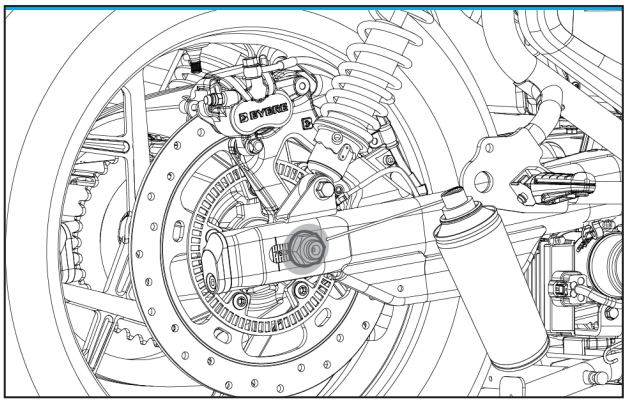

Solvents/Oils for Cleaning

Use correct solvents for cleaning to reduce fire hazards.

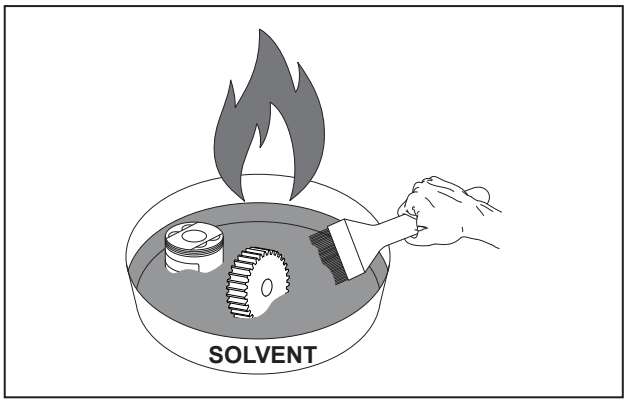

Hazardous Substances

Many liquids and other substances like fuel, lubricants, brake oil, adhesives, etc., used in automobiles are poisonous. Keep the fluids out of reach of children. Do not bring in contact with eyes and skin. Wash exposed skin thoroughly with soap and water. If any irritation persists, consult a doctor immediately.

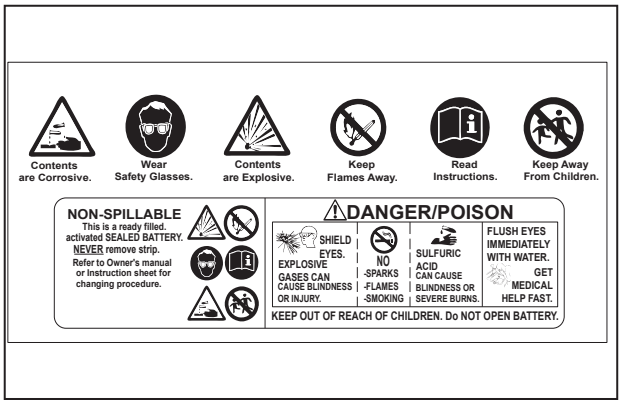

Environmental Protection

Dispose used oil and other consumables like gaskets, O-rings, oil filters through authorized waste-disposal agencies.

Do not spill brake oil on painted parts. It will damage the paint.

Do not use mineral-based grease in brake parts as it will damage the hydraulic seals.

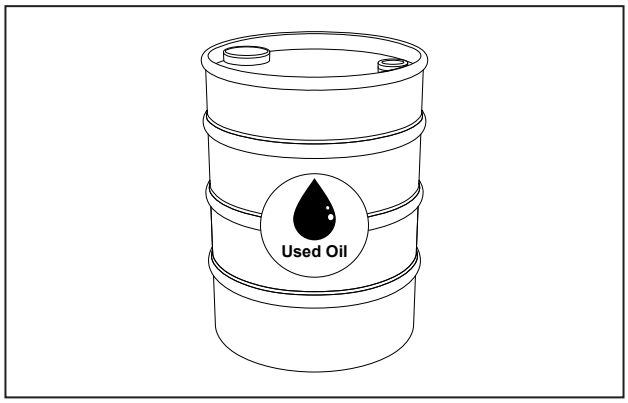

Battery Acid

Avoid spilling battery acid on any part of the motorcycle or your body. Wash spillage immediately with water to avoid acid marks on the motorcycle or burns/injury to yourself.

Gasoline/Petrol

Gasoline/Petrol is highly flammable. Be careful while removing the fuel tank and handling Gasoline/Petrol. Store it in a safe place and ensure it is stored in a well ventilated area, away from the work area and fire.

After-market Parts and Accessories

Royal Enfield strongly recommends use of Royal Enfield genuine parts and accessories only.

A list of all accessories available from Royal Enfield can be obtained from Royal Enfield dealers.

Yet, if you are using any after-market part that is not supplied by Royal Enfield, do ensure that it does not interfere with the functioning of any of the motorcycle parts.

Gasket and O-ring

If the gaskets and O-rings are hardened, shrunk or damaged after disassembly, their sealing performance will be reduced.

Remove used gaskets and O-rings. Clean the sealing surfaces thoroughly. Make sure no gasket or other material waste remains on the surface.

Always replace recommended gaskets and O-rings with Royal Enfield genuine parts once they are removed.

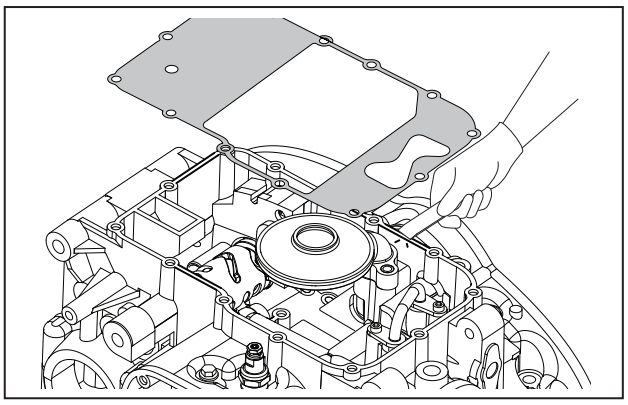

1.5.13. Final Inspection

Once the repairs/servicing is done, check and confirm that all tasks mentioned on the job card have been performed. Do a proper testing to ensure that all critical functions are working properly, all reported issues have been resolved and no new problem has been introduced.

Follow the final inspection checklist and sign out through the final inspector.

1.5.14. Delivery to the Customer

Ensure that the customer is informed about all the repairs that have been carried out. Also let he/she know about the parts that have been replaced and consumed during the repairs. Demonstrate to the customer that all his/her reported issues have been resolved. Insist on a test ride if required.

Please preserve the parts. Show it to the customer and dispose it with the customer's permission.

TECHNICAL SPECIFICATIONS

CONTENTS PAGE

2. Technical Specifications 24

2.1 Engine 24

2.2 Ignition System 24

2.3 Transmission 24

2.4 Chassis 25

2.5 Electrical System 25

2.6 Dimensions 26

2.7 Weights 26

2.8 Recommended Lubricants 26

2. Technical Specifications

2.1 Engine	
Engine Type	**Inline twin cylinder, 4 stroke, SOHC**
Bore	**78 mm**
Stroke	**67.8 mm**
Swept Volume	**647.95 cc**
No of Valves	**8Nos**
Compression Ratio	**9.5:1**
Max Power	**34.6 kW @ 7250 rpm**
Max Torque	**52.3 Nm @ 5650 rpm**
Idle RPM	**1200 +/- 100 rpm**
Starting	**E-Start**
Air Filter Element	**Paper element**
Cooling	**Air Cooling**
Lubrication	**Forced lubrication, Wet sump with pump driver oil delivery**
Gear Box	**6 Speed Constant Mesh**
Engine Oil Tank Capacity	**Dry Fill:3.9 Liters / 0.85 Imperial gallon**
	Refill: 3.1 Liters / 0.68 Imperial gallon
Engine oil grade	**10W-50 to API SL (or higher) JASO MA2, such as ELF MOTO4 TECH 10W 50 (Fully synthetic)**
Fuel Supply	**Fuel Injection**

2.2 Ignition System	
Ignition	**Digital Spark ignition**
Spark Plug	**BOSCH UR5CC**
Spark Plug Gap	**0.7 mm to 0.8 mm**
Ignition advanced	**11.25° BTDC**

2.3 Transmission	
Clutch	**Wet multiplate**
Primary Drive	**Gear**
Primary Ratio	**2.051:1**
Gear Box	**6 Speed Constant Mesh**
Gear Ratio	**1st - 2.615 :1** **2st - 1.813 :1** **3st - 1.429:1** **4st - 1.190 :1** **5st - 1.040:1** **6st - 0.962:1**
Secondary Drive	**Sprockets and Closed Chain (5/8" Pitch)**
Secondary Ratio	**2.667:1**

2.4 Chassis

Frame	**Steel tubular spine frame**		
Suspension	**Front**	**Upside down telescopic fork,**	
	Rear	**Twin shock**	
Hydraulic Disc Brakes	**Front and Rear with ABS System**		
	Front	**Single 320 mm disc, twin piston floating caliper**	
	Rear	**Single 300 mm disc, twin piston floating caliper**	
	ABS	**Dual channel / Bosch 2 CH- GEN 10.3**	
Brake Fluid	**Grade**	**DOT 4**	
	Capacity	**Front: 50 ml**	**Rear: 100 ml**
Tyre size	**Front (Alloy wheel)**	**100/90-18 M/C 56H CEAT ZOOM CRUZ Z F (Tubeless tyre)**	
	Rear (Alloy wheel)	**150/70 R17 M/C 69H ZOOM RAD STEEL Z (Tubeless tyre)**	
Tyre Pressure	**Type of wheel**	**Solo**	**With Pillion**
	Front	**32 psi/2.24 kg/cm²**	**32 psi/2.24 kg/cm²**
	Rear	**36 psi/2.53 kg/cm²**	**42 psi/2.95 kg/cm²**
Steering Lock	**Ignition barrel (33 deg)**		
Fuel	**Unleaded Gasoline (Up to E20)**		
Fuel tank capacity	**13.8*Liters/ 3.03* Imperial Gallons , useable (11.9 Liters/ 2.61* Imperial Gallons)**		
Low Fuel Warning	**3.8* Liters / 0.83* Imperial Gallons, useable (2.1 Liters/ 0.46* Imperial Gallons)**		
Dead Stock	**1.7* Liters/0.37 * Imperial Gallons**		
The above values are approximate and the actual fuel filling capacity will vary from the values mentioned.			

2.5 Electrical System	
System	**12V - DC**
Generation	**Alternator**
Alternator Output	**156 Watts @ 1100 RPM**
Battery	**12V, 12 Ah VRLA**
Headlamp	**FPL 1.55 W LED, low beam 12.12 W, high beam + low beam 14.22 W**
Brake Lamp	**4.5 W, LED**
Turn Signal	**12V, 10W**
Tail Lamp	**2.5 W, LED**
Instrument Cluster	**Digital display with analog speedometer**
Horn	**430 Hz high tone**
Starter Motor	**12V, 0.8 kW**
Charger Port	**USB 2.0 Type A - 5 V 2 A output**
ECU Model	**Vitesco (Continental) M4C**

⚠ WARNING

Using bulbs/other electrical gadgets other than specified rating may lead to over loading/erratic behavior/premature failure of electrical system. Modifications on the motorcycle which are not approved by Royal Enfield may not only disqualify for warranty, but will also affects the performance of the motorcycle.

2.6 Dimensions	
Rake/Head angle	**27.57˚ degrees**
Front wheel rim size	**MT 2.5 ×18**
Rear wheel rim size	**MT 4.25 ×17**
Length	**2220 mm**
Width	**835 mm (Bar end mounting)**
Height	**1105 mm**
Wheel base	**1465 mm**
Ground Clearance (At static sag).	**141 mm**

2.7 Weights	
Kerb weight (90% fuel & Oil)	**240 kg**
Gross vehicle weight	**428 kg**

- Values/Dimensions given above are for your guidance only.
- In view of continuous improvements being done on our products, the specifications could change without prior notice.

2.8 Recommended Lubricants

Engine Oil	Grade	**10W-50 to API SL (or higher) JASO MA2, such as ELF MOTO4 TECH 10W 50 (Fully synthetic)**	
	Capacity	**1st Dry fill**	**3.9 Liters/0.85 Imperial Gallons/1.03 US Gallons**
		Routine Oil Change	**3.1 Liters/0.68 Imperial Gallons/0.81 US Gallons**
Front Fork Oil	Grade	**SS-47G**	
	Capacity	**RH fork: 544 ml (Approx.) LH fork: 555 ml (Approx.)**	
Brake Fluid	Grade	**DOT 4**	
	Capacity	**Front 50 ml Rear 100 ml**	

⚠ CAUTION

Use of wrong grade oil will reduce the life of the moving parts and seriously affect performance.

NOTE

- *DO NOT Mix DOT 4 or other brake fluids together.*
- *Recommendation is subject to change without notice.*

Engine Oil Lubrication Flow

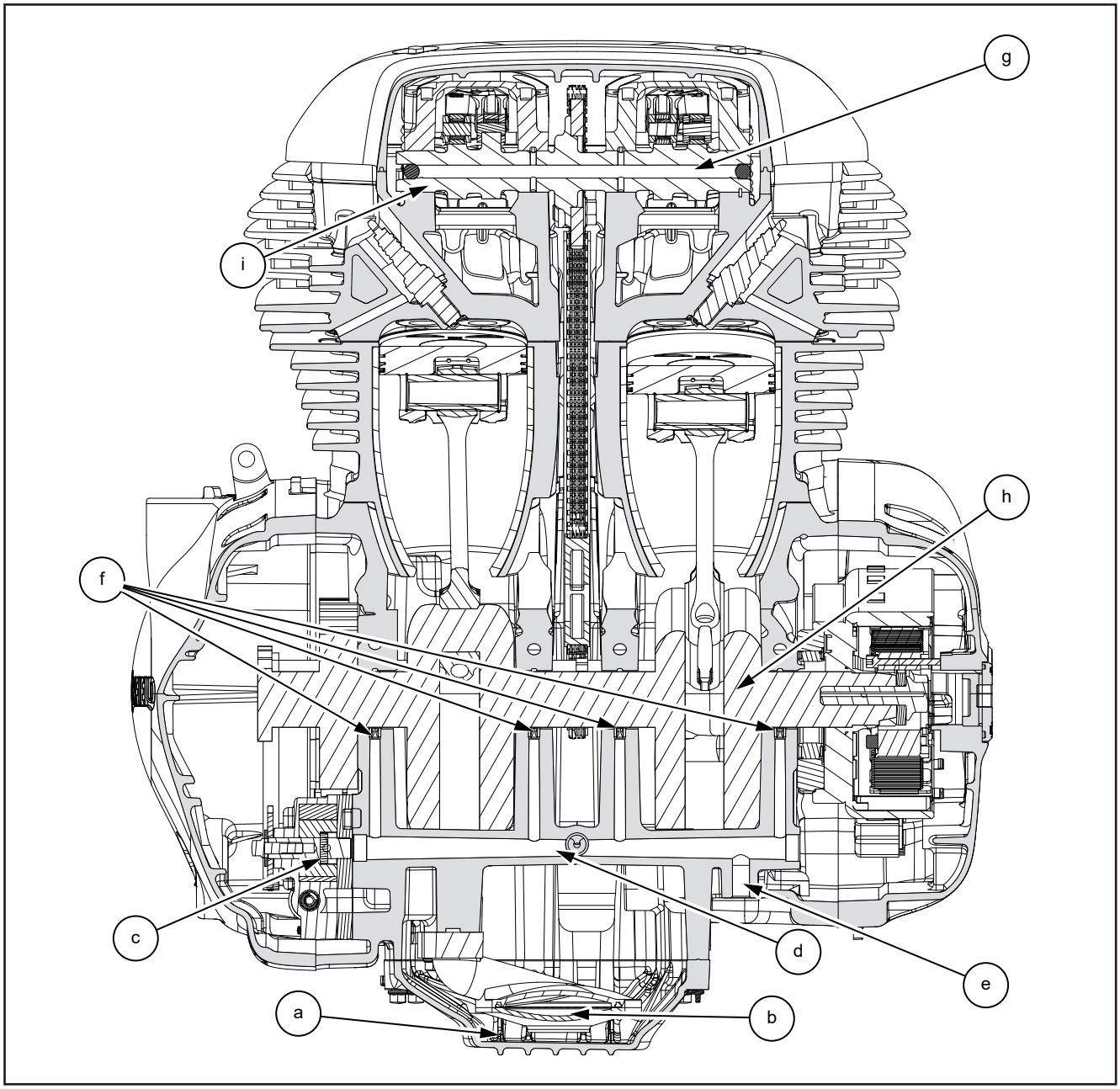

Item No.	Description	Quantity
a	Oil Sump	1
b	Oil Strainer	1
c	Oil Pump	1
d	Crank Shaft Oil Passage	-
e	Oil Pressure Switch Passage	1
f	Oil Jets (Crankcase Lower)	4
g	Camshaft Oil Passage	1
h	Crankshaft	1
i	Camshaft	1

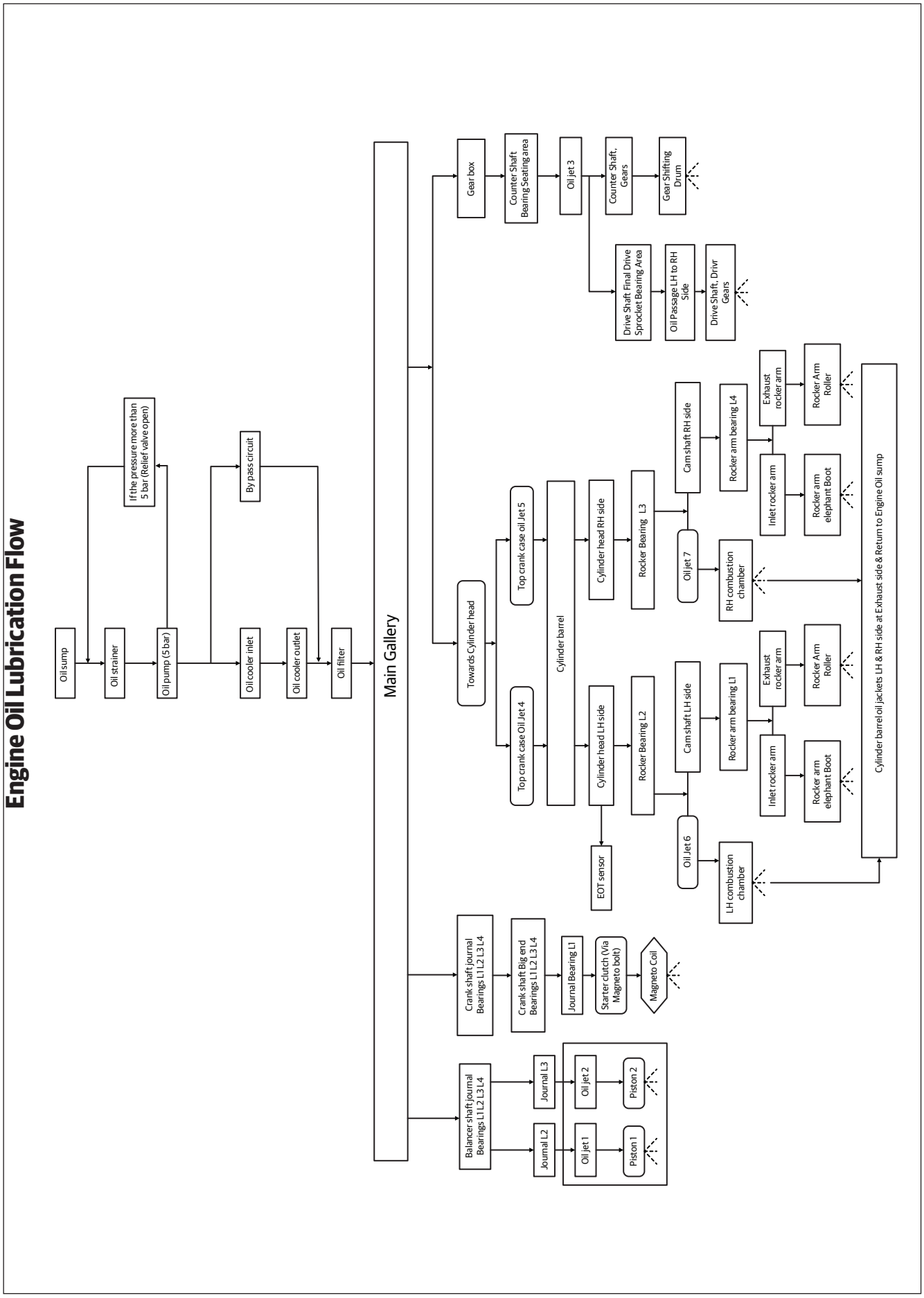
Engine Oil Lubrication Flow
Oil sump
Oil strainer
Oil pump (5 bar)
If the pressure more than 5 bar (Relief valve open)
Oil cooler inlet
By pass circuit
Oil cooler outlet
Oil filter
Main Gallery
Gear box
Counter Shaft Bearing Seating area
Oil jet 3
Counter Shaft, Gears
Gear Shifting Drum
Drive Shaft Final Drive Sprocket Bearing Area
Oil Passage LH to RH Side
Drive Shaft, Drivr Gears
Towards Cylinder head
Top crank case oil Jet 5
Top crank case Oil Jet 4
Cylinder barrel
Cylinder head RH side
Cylinder head LH side
Rocker Bearing L3
Rocker Bearing L2
Cam shaft RH side
Cam shaft LH side
Oil jet 7
Oil Jet 6
Rocker arm bearing L4
Rocker arm bearing L1
RH combustion chamber
LH combustion chamber
Exhaust rocker arm
Inlet rocker arm
Rocker Arm Roller
Rocker arm elephant Boot
EOT sensor
Crank shaft journal Bearings L1 L2 L3 L4
Crank shaft Big end Bearings L1 L2 L3 L4
Journal Bearing L1
Starter clutch (Via Magneto bolt)
Magneto Coil
Balancer shaft journal Bearings L1 L2 L3 L4
Journal L3
Journal L2
Oil jet 2
Oil jet 1
Piston 2
Piston 1
Cylinder barrel oil jackets LH & RH side at Exhaust side & Return to Engine Oil sump

Oil Pan - Main Oil Gallery

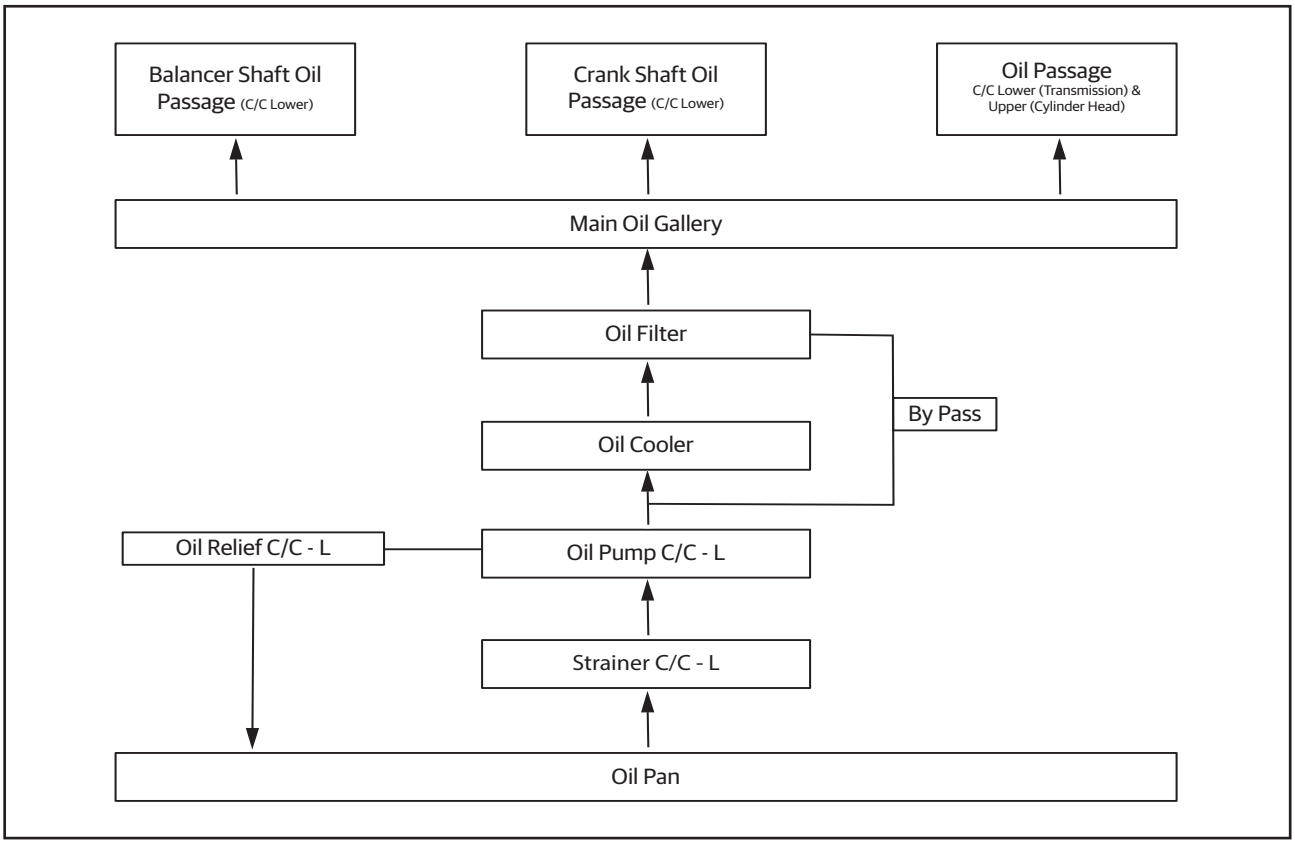

Balancer Oil Passage

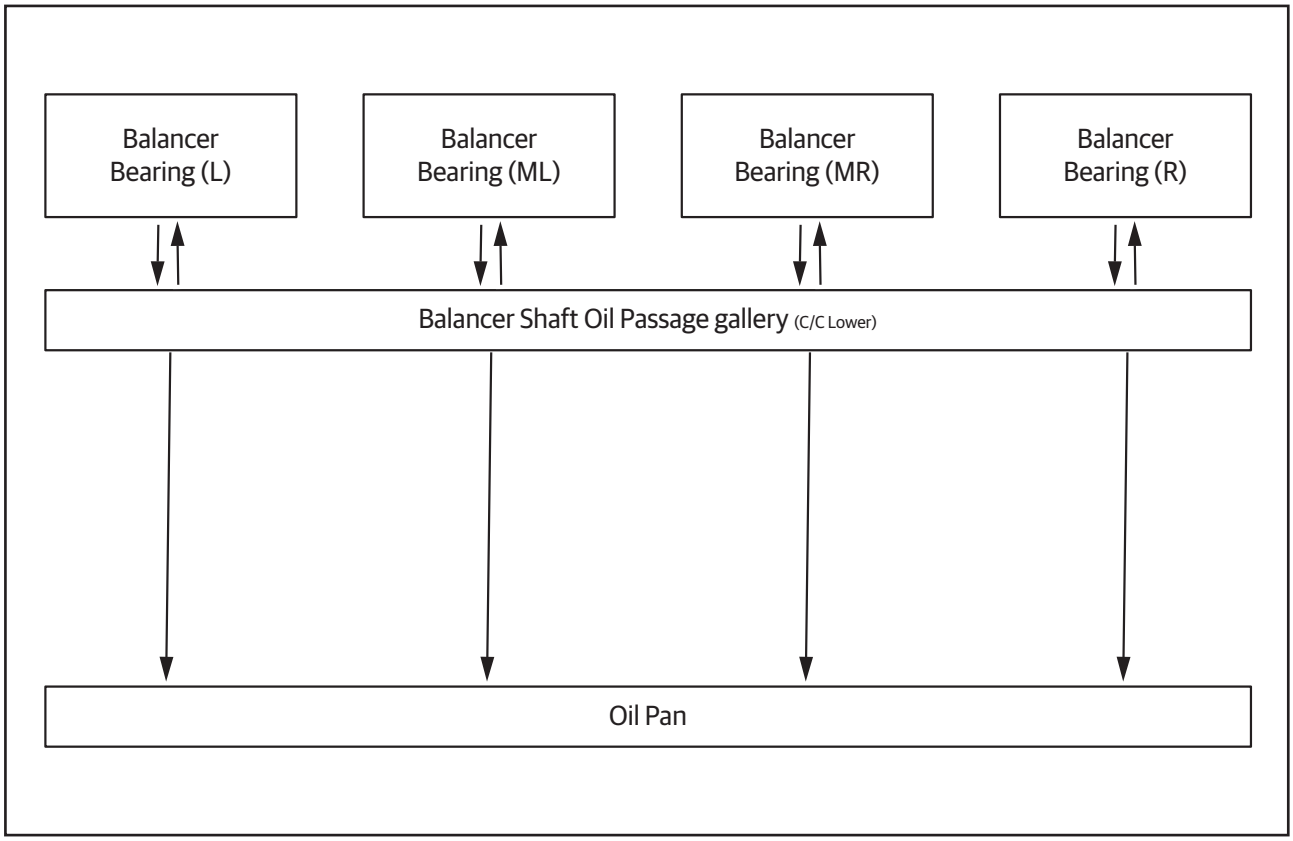

Crankshaft Oil Passage

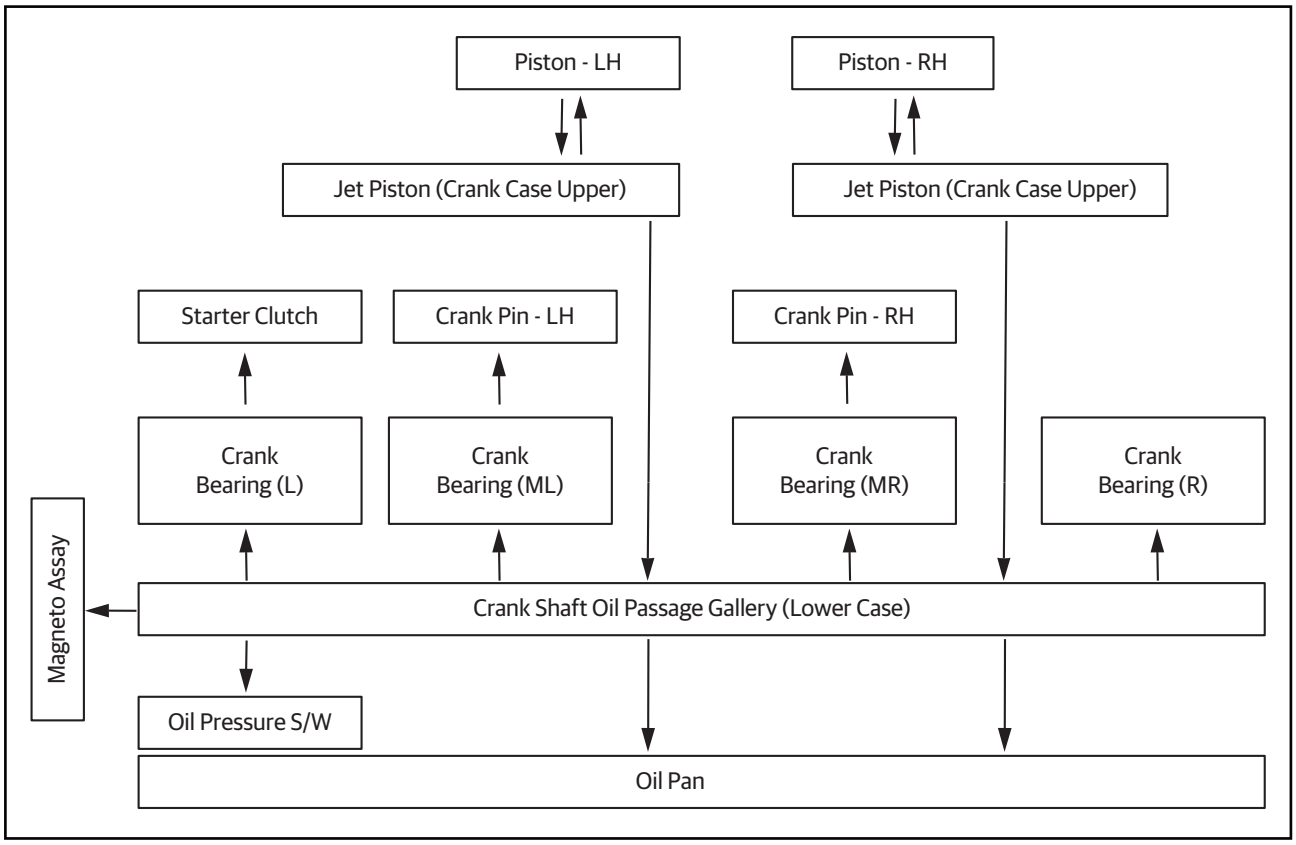

Crankshaft Comp & Connecting rod Piston Assy

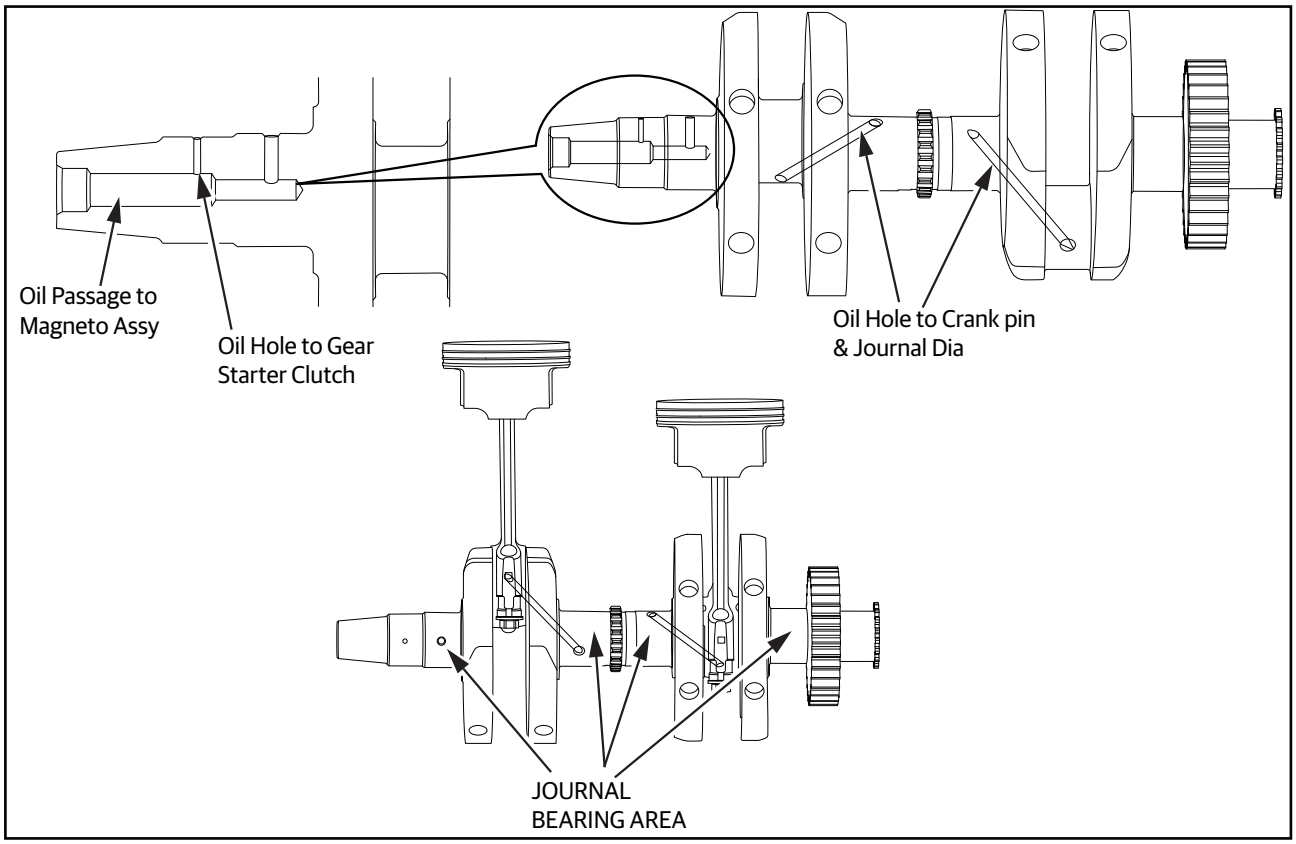

Oil Passage Crankcase Lower To Upper Cylinder

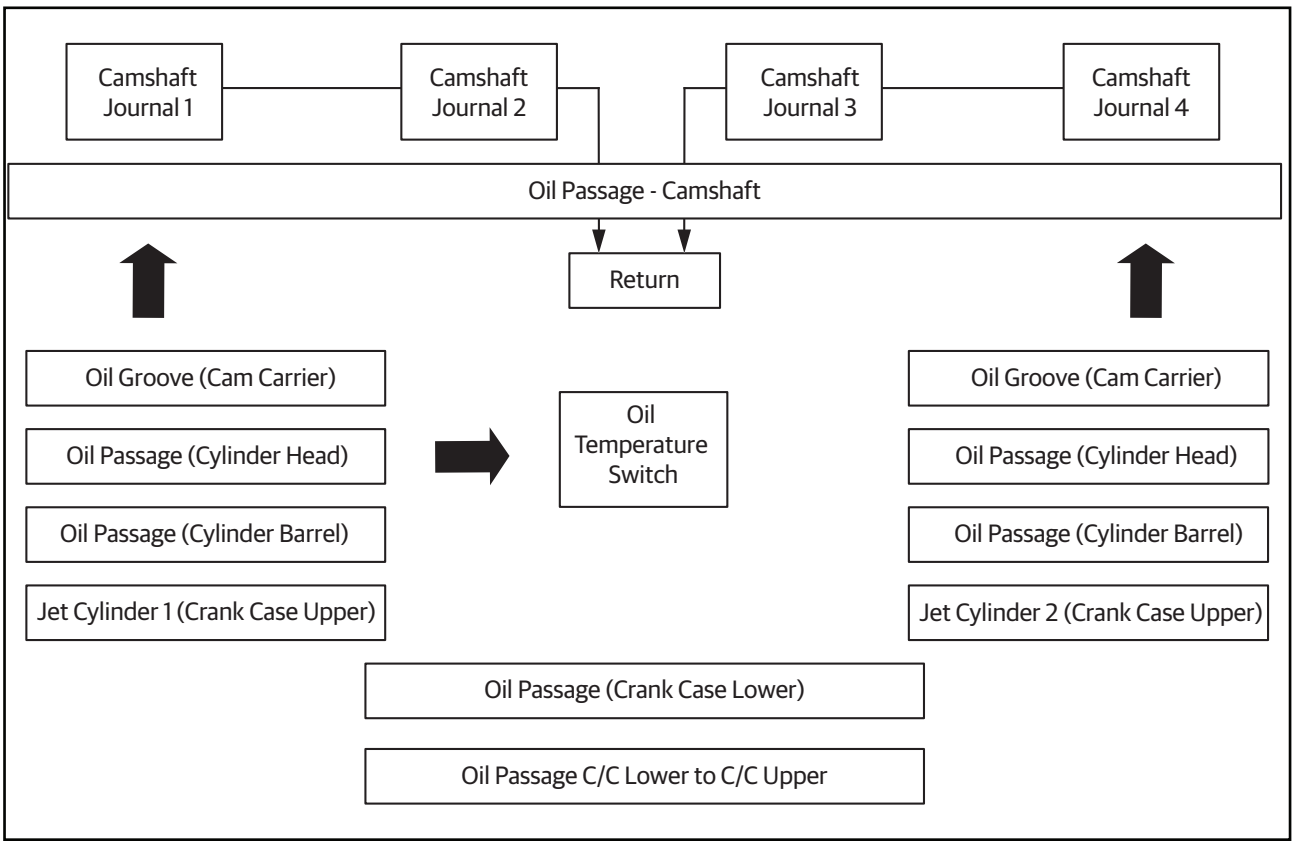

Oil Passage Crankcase Lower Transmission

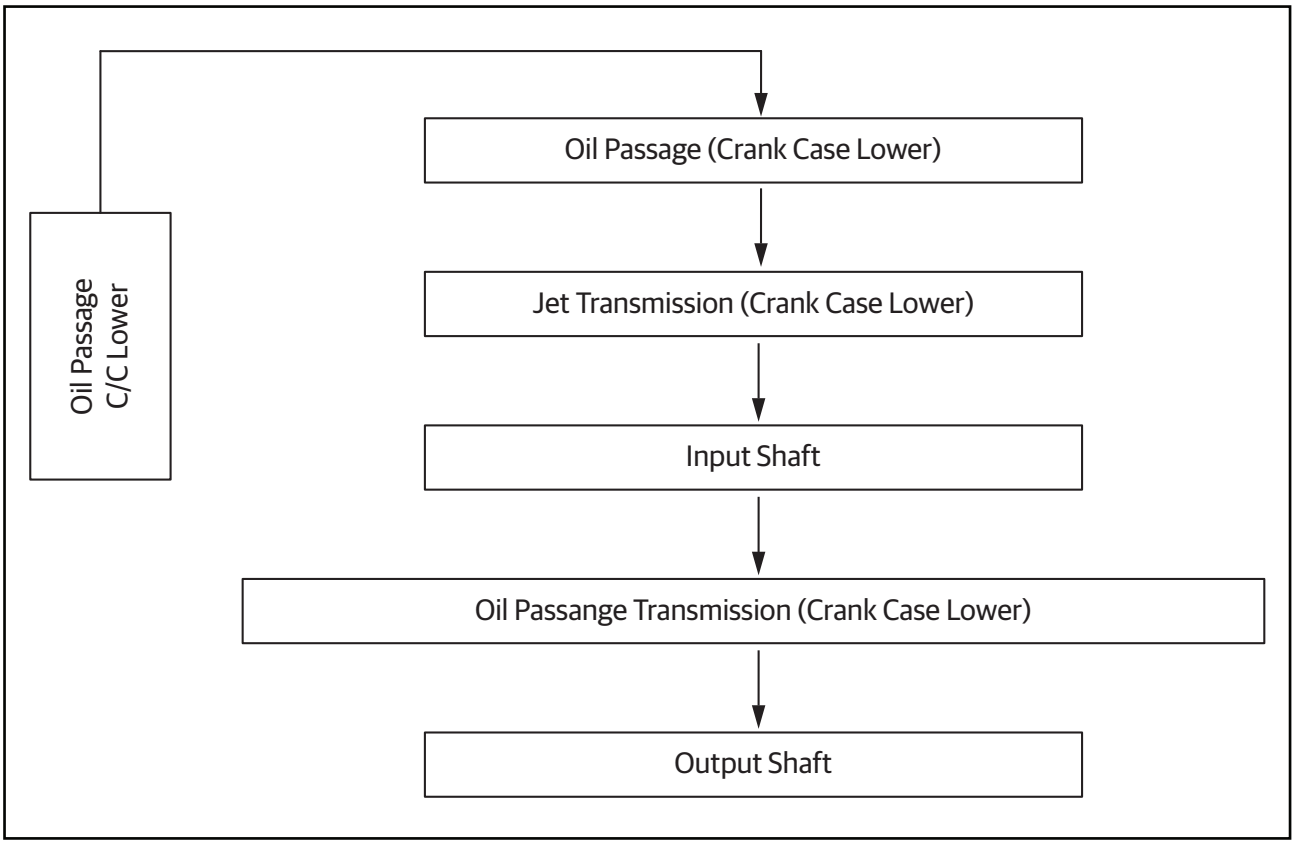

Oil Passage Cam, Rocker And Valve

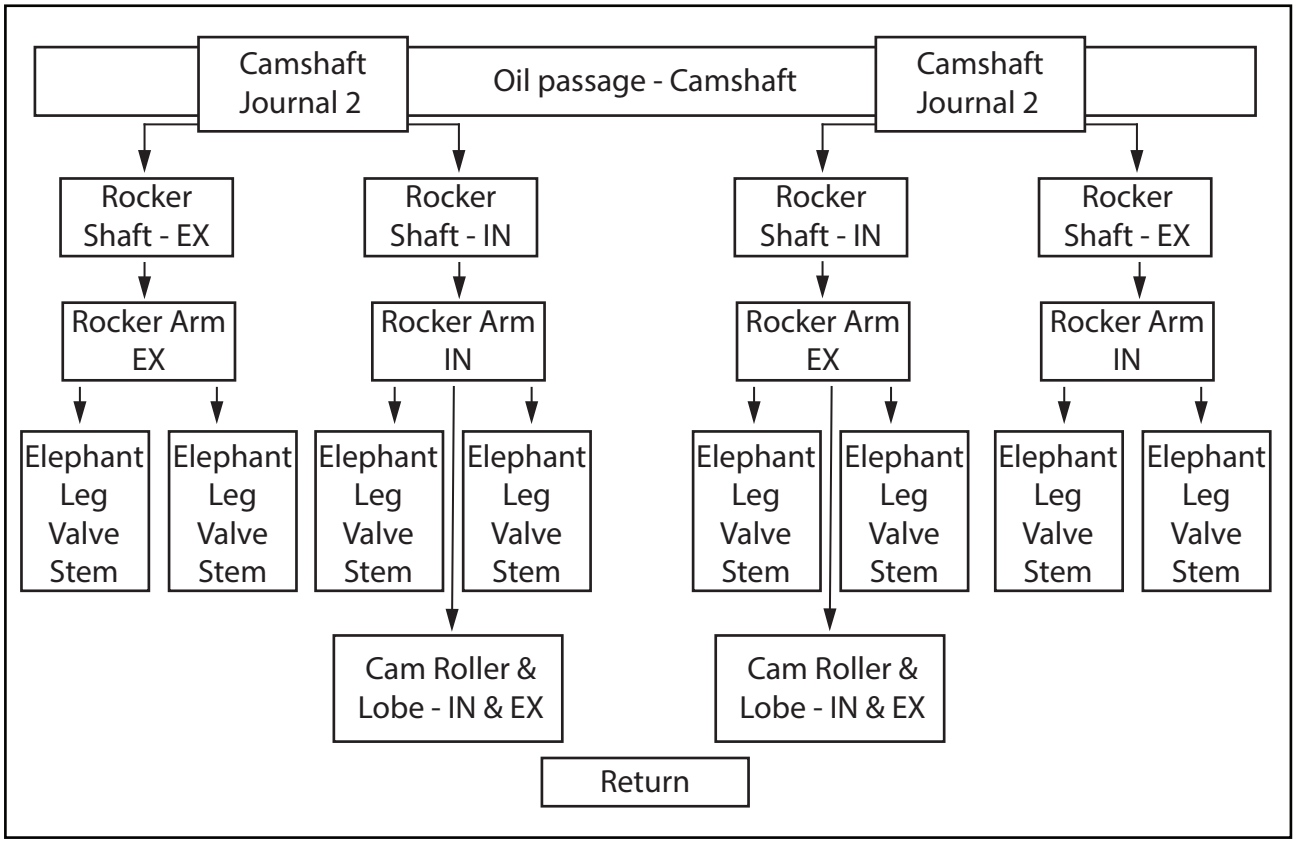

PERIODIC MAINTENANCE SCHEDULE (PMS)

3. Periodical Maintenance Schedule (PMS)

The maintenance schedule detailed here will help you to maintain your Shotgun 650 motorcycle meticulously to get along trouble free service. The schedule provided herein is based upon an average riding conditions and indicates the km at which regular inspections, adjustments, replacements and lubrications are to be carried out. The frequency of the maintenance must be shortened depending upon the severity of the driving condition or if the motorcycle is used in a very dust environment. Contact the nearest Royal Enfield Authorised Service Centre for expert advice and to carry out the required maintenance.

Sl. No.	DESCRIPTION	PERIODICAL MAINTENANCE (Whichever is earlier)										
	km (x 1,000)	**0.5**	**5**	**10**	**15**	**20**	**25**	**30**	**35**	**40**	**45**	**50**
	Miles (x 1,000)	**0.3**	**3**	**6**	**9**	**12**	**15**	**18**	**21**	**24**	**27**	**30**
	Months	**1.5**	**6**	**12**	**18**	**24**	**30**	**36**	**42**	**48**	**54**	**60**
1	Engine Oil (#)	R		R		R		R		R		R
		Check level at every 1000 km or earlier and top up as required										
2	Engine oil filter (#)	R		R		R		R		R		R
3	Inlet and exhaust valve clearance (**)	I		I		I		I		I		I
4	Spark plug	I	I	I	I	R	I	I	I	R	I	I
5	HT lead	I	I	I	I	I	I	I	I	I	I	I
6	Rubber hose, Air filter to throttle body	I	I	I	I	I	I	I	I	I	I	I
7	Rubber hose, Inlet manifold / Adaptor	I	I	I	I	I	I	I	I	I	I	I
8	Evaporative Emission Equipment rubber hoses	I	I	I	I	I	I	I	I	I	I	I
9	Air filter element	C	C	R	C	R	C	R	C	R	C	R
		Clean/Replace more frequently if operated in dusty conditions										

I - Inspect (Clean and lubricate if necessary) A - Adjust(If Necessary) L - Lubricate R - Replace C - Clean

(#) - After first service, engine oil and engine oil filter replacement is required every 12 months regardless of kilometer.

(**) - After first service, valve clearance adjustment is required every 12 months regardless of kilometer.

NOTE

For Maintenance after 50,000 Km, Please repeat the same frequency specified above, in consultation with a Royal Enfield Authorised Dealer / Service Centre.

SI. No.	DESCRIPTION	PERIODICAL MAINTENANCE (Whichever is earlier)										
	km (x 1,000)	**0.5**	**5**	**10**	**15**	**20**	**25**	**30**	**35**	**40**	**45**	**50**
	Miles (x 1,000)	**0.3**	**3**	**6**	**9**	**12**	**15**	**18**	**21**	**24**	**27**	**30**
	Months	**1.5**	**6**	**12**	**18**	**24**	**30**	**36**	**42**	**48**	**54**	**60**
10	Vent Pipe under air filter box	I	I	I	I	I	I	I	I	I	I	I
11	Throttle cable	A	A	A	A	A	A	A	A	A	A	A
12	Clutch cable / lever free play	Adjust every 1000 km or earlier as required										
13	Clutch lever & front brake lever pivots	Lubricate every 1000 km or earlier as required										
14	Brake pads - Front and Rear	I	I	I	I	I	I	I	I	I	I	I
15	Brake fluid - Front and Rear	I	I	I	I	R	I	I	I	R	I	I
16	Rear brake pedal and gear change pedal pivot	L	L	L	L	L	L	L	L	L	L	L
17	Brake hose and Banjo Bolt - Front and Rear	I	I	I	I	I	I	I	I	I	I	I
18	Headstock bearings	I	I	I	I	I	I	I	I	I	I	I
19	Rear Wheel Drive Chain	Clean, Lubricate and Adjust every 500 km or earlier as required or after riding in wet/dusty/muddy conditions										
20	Rear wheel Cush rubbers					I				I		

I - Inspect (Clean and lubricate if necessary) A - Adjust(If Necessary) L - Lubricate R - Replace C - Clean

(#) - After first service, engine oil and engine oil filter replacement is required every 12 months regardless of kilometer.

(**) - After first service, valve clearance adjustment is required every 12 months regardless of kilometer.

NOTE

For Maintenance after 50,000 Km, Please repeat the same frequency specified above, in consultation with a Royal Enfield Authorised Dealer / Service Centre.

SI. No.	DESCRIPTION	PERIODICAL MAINTENANCE (Whichever is earlier)										
	km (x 1,000)	**0.5**	**5**	**10**	**15**	**20**	**25**	**30**	**35**	**40**	**45**	**50**
	Miles (x 1,000)	**0.3**	**3**	**6**	**9**	**12**	**15**	**18**	**21**	**24**	**27**	**30**
	Months	**1.5**	**6**	**12**	**18**	**24**	**30**	**36**	**42**	**48**	**54**	**60**
21	Battery terminals (apply petroleum jelly)	I	I	I	I	I	I	I	I	I	I	I
22	Earth wire eyelet tightness			I		I		I		I	I	I
23	Tyre wear pattern front and rear	I	I	I	I	I	I	I	I	I	I	I
24	Side Stand & Center Stand pivots	L	L	L	L	L	L	L	L	L	L	L
25	Rider and Pillion Footrest pivot	L	L	L	L	L	L	L	L	L	I	I

I - Inspect (Clean and lubricate if necessary) A - Adjust(If Necessary) L - Lubricate R - Replace C - Clean

(#) - After first service, engine oil and engine oil filter replacement is required every 12 months regardless of kilometer.

(**) - After first service, valve clearance adjustment is required every 12 months regardless of kilometer.

NOTE

For Maintenance after 50,000 Km, Please repeat the same frequency specified above, in consultation with a Royal Enfield Authorised Dealer / Service Centre.

GENERAL AND SPECIAL TOOLS

CONTENTS PAGE

4. General and Special Tools 40

4.1 General Tools 40

4.2 Measurement Tools 43

4.3 Special Tools 45

4.3.1. Engine 45

4.3.2. Vehicle 47

4. General and Special Tools

4.1 General Tools

Sl. No.	Size	Part Description	Illustration
1	100 - 225mm	Screw Driver	
2	100 - 225mm	Screw Driver Phillips	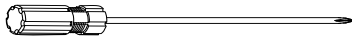
3	T20	Screw Driver (Torx)	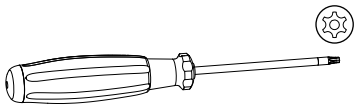
4	-	Chisel Flat	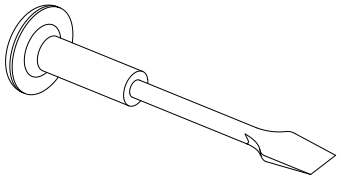
5	-	Chisel Pointed	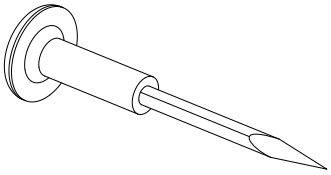
6	6-7 to 26-27mm	Spanner (Double End/Open End)	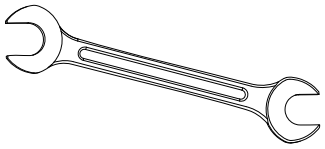
7	8-9 to 24-25mm	Spanner (Ring)	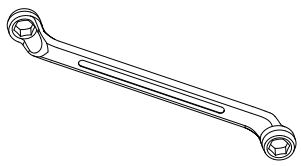
8	-	Hammer	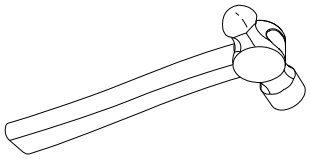

Sl. No.	Size	Part Description	Illustration
9	-	Plastic Hammer	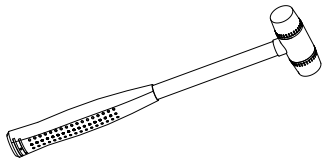
10	-	Mallet	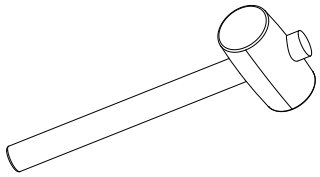
11	-	Tommy Bar	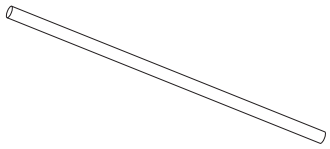
12	-	Spring Puller	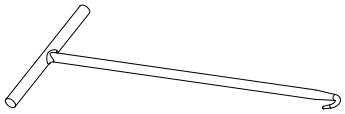
13	4 - 14mm	Allen Key	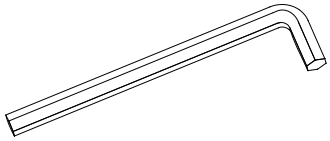
14	4 - 14mm	Allen Socket	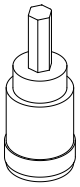
15	8 to 30mm	Hex Socket	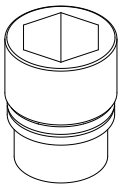
16	12mm	Bi-hexagonal	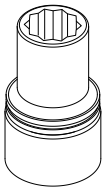
17	5" & 10"	Extension	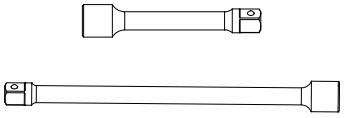

Sl. No.	Size	Part Description	Illustration
18	-	Ratchet	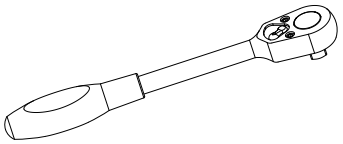
19	-	T-handle	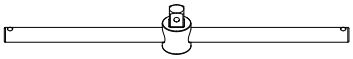
20	10 - 50N-m & 22 - 100N-m	Torque Wrench	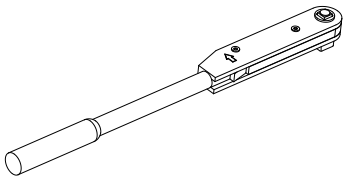
21	-	Cutting Plier	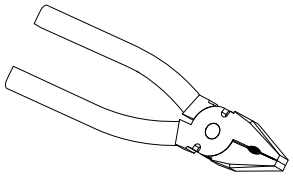
22	-	Nose Plier	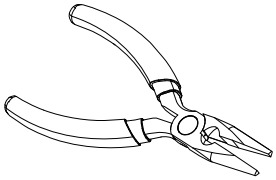
23	-	Circlip Plier	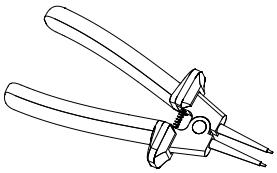
24	-	Adjustable Plier	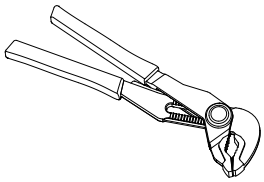
25	-	Pinch Plier	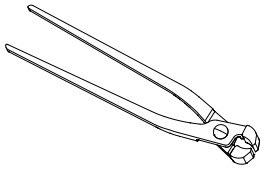
26	-	Spoke Adjuster	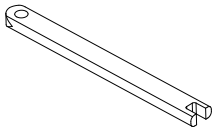

Sl. No.	Size	Part Description	Illustration
27	-	Scissor Jack	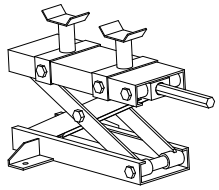
28	-	V-block	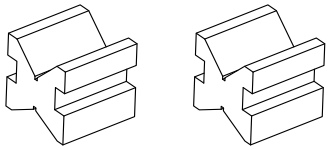
29	10 N-m - 200 N-m	Digital Torque Wrench	

4.2 Measurement Tools

1	-	Vernier Caliper	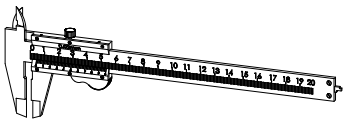
2	0 - 25mm, 25 - 50mm, 50 - 75mm, 75 - 100mm	Micrometer	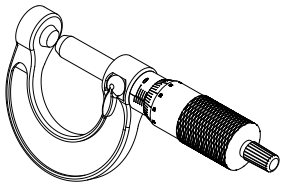
3	-	Bore Gauge	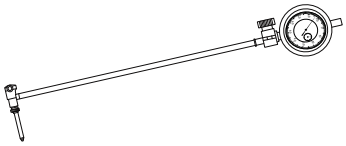
4	-	Dial Gauge with Magnetic Stand	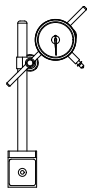
5	-	Tyre Depth Gauge	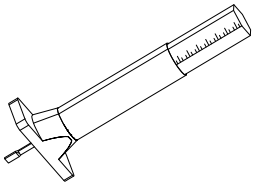
6	-	Steel Ruler	

SPECIAL TOOLS

4.3 Special Tools

4.3.1. Engine

I. No.	Part Number	Part Description	Illustration
1	ST30274/a	Magneto Puller Assembly	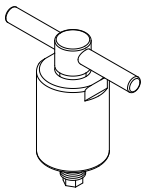
2	ST275332	Crank Gears Locking Tool	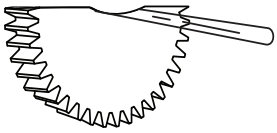
3	ST30259/a	Adapter - Compression Checking	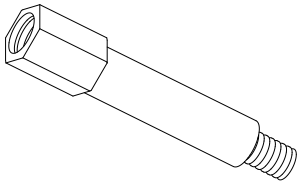
4	ST30266/a	Clutch Holder	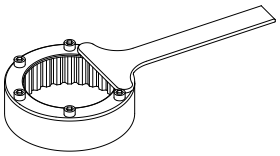
5	ST30271/a	Gear Shifter Shaft NRB and Oil Seal Installer	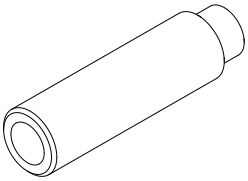
6	ST30296/a	Piston Ring Compressor	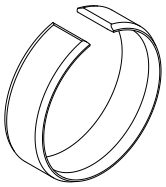
7	ST30294/a	Oil Filter Wrench	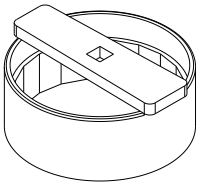

Sl. No.	Part Number	Part Description	Illustration
8	ST-27562-1	Angular Torque Wrench	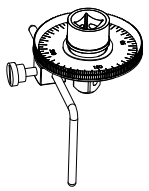
9	ST30264/a	Clutch Activating Shaft Oil Seal Installer	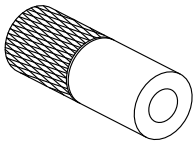
10	ST30262/a	Clutch Activating Lever Top Bearing Installer	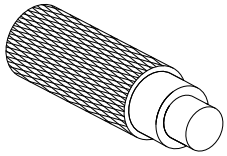
11	ST30265/a	Clutch Activating Shaft Top Bearing Puller	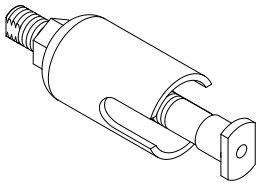
12	ST30261/a	Clutch Activating Lever Bottom Bearing Installer	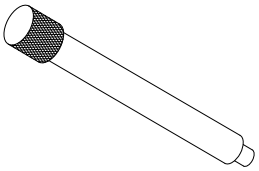
13	ST30263/a	Clutch Act Shaft Bottom Bearing Puller	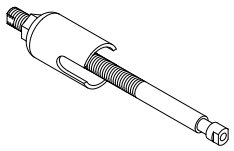
14	ST30270/a	Gear Shifter Drum NRB Installer	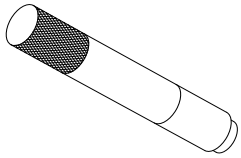
15	ST30293/a	Oil Filter Union Wrench	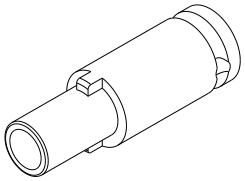
16	ST-27527-2	Tappet Adjusting Tool	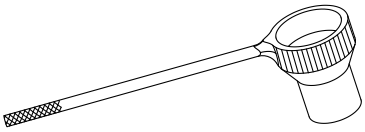

SL. No.	Part Number	Part Description	Illustration
17	ST-27534-2	FD Sprocket Holding Tool	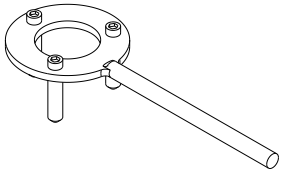
18	ST-27528-2	Valve Spring Compressor	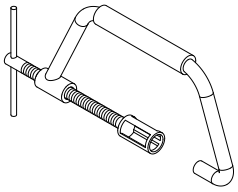
19		Magnet Holder	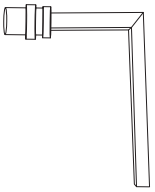
20		Oil Pressure Adapter	
21		Oil Pressure Gauge	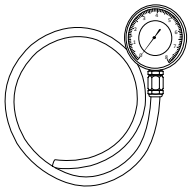

4.3.2. Vehicle

Sl. No.	Part Number	Part Description	Illustration
1	ST-31883-a	Chain Rivet Pin	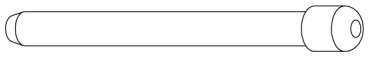
2	ST-31884-a	USD Fork Nut Remover And Installer	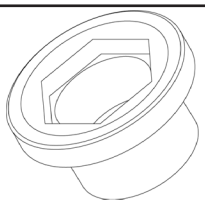
3	ST-31885-a	USD Dust Seal And Oil Seal Installer	

4	ST-31886-a	USD Stopper Ring Removal Jig	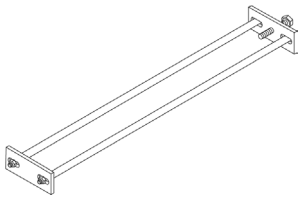
5	ST-31887-a	USD Stopper Ring Remover	
6	ST-31888-a	USD Piston Comp. Remover	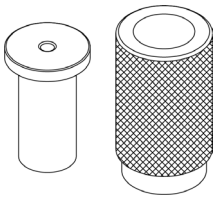
7	ST-31889-a	T-STEM Taper Roller Bearing Remover	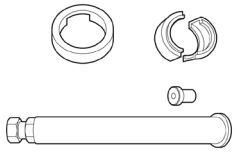
8	ST-31890-a	Head Stock Ball Race Installer Adapter	
9	ST-31891-a	Swing Arm Dust And NRB Installer	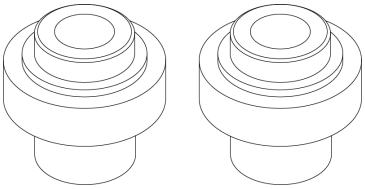
10	ST-31892-a	Head Stock Ball Race Remover	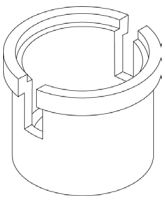
11	ST-31893-a	T STEM Taper Roller Bearing Installer	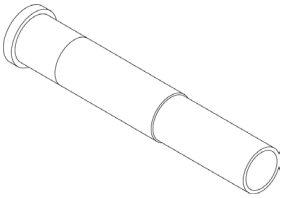
12	ST-31894-a	Common Screw Rod For Head Stock Ball Race Installer	

13	ST-31895-a	Swing Arm NRB Bearing Remover Tool	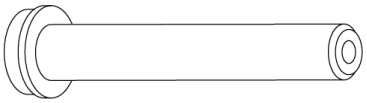
14	ST30267/a	Frame Adjuster OD 14.8/ ID 10.8 mm-Engine	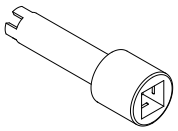
15	ST30268/a	Frame Adjuster OD 16.7/ ID 13 mm-Engine	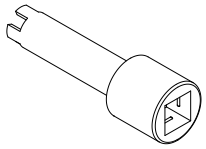
16	ST30269/a	Frame Adjuster OD 21.5/ ID 18 mm-Swingarm	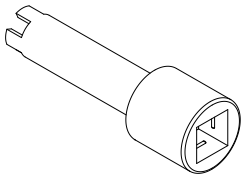
17	ST30272/a	Headstock Bearing Puller-Assembly	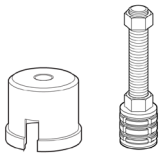
Head Stock Ball Race Installer tool full assembled view			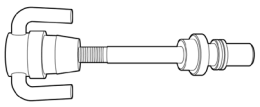

ENGINE

CONTENTS PAGE

5.1. COMPONENTS REMOVAL FROM ENGINE .....
5.2. COMPONENTS ASSEMBLY ONTO ENGINE 50
5.3. ENGINE REMOVAL FROM FRAME 82
5.4. ENGINE ASSEMBLY TO FRAME 128
5.5. ENGINE DISMANTLING..... 160
5.6. ENGINE INSPECTION 194
5.7. CRANKSHAFT JOURNAL BEARING SELECTION 234
5.8. ENGINE ASSEMBLY..... 246
5.9. ENGINE TROUBLESHOOTING..... 254
321

COMPONENTS REMOVAL FROM ENGINE

CONTENTS PAGE

5. ENGINE 55

5.1 Components Removal from Engine 55

5.1.1. Drain Plug 55

5.1.2. Oil Filter 56

5.1.3. Starter Motor 56

5.1.4. Breather Hose Connections 57

5.1.5. Breather Box 57

5.1.6. Gear Shift Linkage 57

5.1.7. Throttle Body Covers on LH and RH 58

5.1.8. Throttle Cable 58

5.1.9. Injector, TPS, MAPS, ISC Connections 58

5.1.10. Air Filter Hoses to Throttle Body 59

5.1.11. Throttle Body 59

5.1.12. Inlet Manifold Rubber Flanges 59

5.1.13. Spark Plug Suppressor Caps on LH and RH 60

5.1.14. Spark Plugs 60

5.1.15. Clutch Cable on Clutch Cover 60

5.1.16. Clutch Actuating Lever Assembly 60

5.1.17. Clutch Cover 61

5.1.18. Clutch Actuating Shaft 62

5.1.19. Oil Level Window 62

5.1.20. Clutch Plates 63

5.1.21. Oil Pump 65

5.1.22. Gear Shifter Shaft 65

5.1.23. Stator and GPS Wiring Connectors 67

CONTENTS **PAGE**

5.1.24. FD Sprocket Cover 67

5.1.25. Gear Position Sensor (GPS) 67

5.1.26. FD Sprocket 68

5.1.27. Cylinder Head Cover 69

5.1.28. Crankshaft Plug On Magneto Cover 70

5.1.29. Rocker Carrier LH from Cylinder Head 70

5.1.30. Rocker Carrier RH from Cylinder Head 71

5.1.31. Auto Chain Tensioner 72

5.1.32. Camshaft Sub Assembly 72

5.1.33. Magneto Cover 74

5.1.34. Stator Assembly with CPS 75

5.1.35. Magneto Rotor Bolt 76

5.1.36. Starter Clutch from Magneto Rotor 77

5.1.37. Cylinder Head 77

5.1.38. Components from Cylinder Head 78

5.1.39. Floating Chain Pad 79

5.1.40. Cylinder Barrel 79

5.1.41. Pistons 79

5.1.42. Oil Pressure Switch 80

5.1.43. Oil Pan 80

5.1.44. Oil Strainer 81

5.1.45. Oil Bypass 81

5. ENGINE

5.1 Components Removal from Engine

⚠ WARNING

The engine and exhaust system get extremely hot during normal operation and direct contact with skin can cause serious burns. Make sure engine is in normal temperature (OR) cooled before starting operation.

NOTE

- *Ensure the motorcycle is upright on a firm and flat surface.*
- *Start the engine and allow the engine and oil to warm up for a few minutes and then turn it OFF to facilitate easy draining of oil.*

5.1.1. Drain Plug

- Loosen and remove oil filler cap **(a)** from the crankcase top on the RH side.
- Use an adjustable plier with soft jaws to unscrew filler cap if necessary.

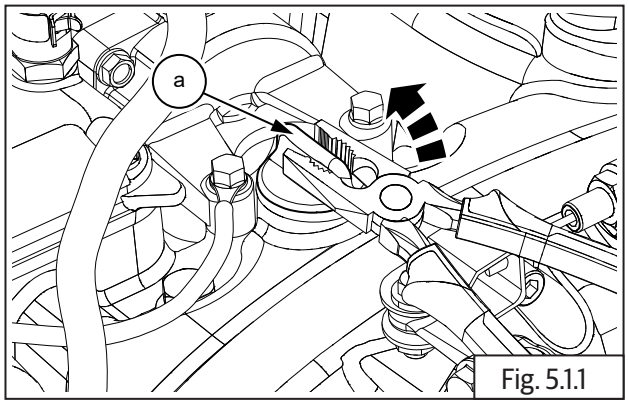

Fig. 5.1.1

	Adjustable plier with soft jaws

- Place a tray under the engine, loosen and remove magnetic drain plug **(a)** along with washer **(b)** from the front end of the oil sump.
- Allow the engine oil to drain out completely from the engine.

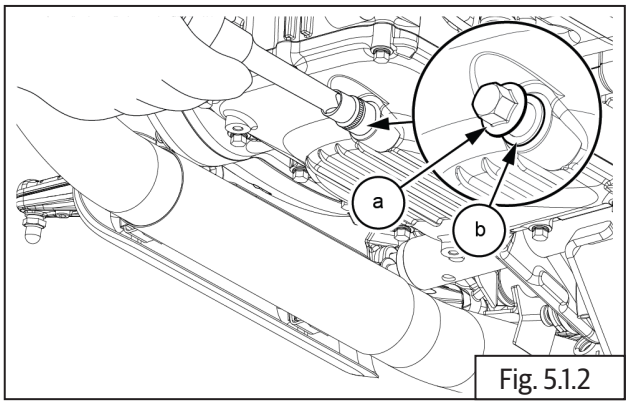

Fig. 5.1.2

	13 mm Socket with Ratchet

⚠ WARNING

DO NOT spill oil. Collect used oil in a separate container and dispose it through authorized disposal agencies in your locality. Avoid skin OR body contact with the oil. Promptly wash affected area with soap and water.

NOTE

- *Ensure the engine oil is drained completely.*
- *After draining the oil suitably cover the oil filler cap hole to prevent debris and/or small components falling into the crankcase.*

5.1.2. Oil Filter

- Place a tray under the engine oil filter.
- Loosen and remove oil filter **(a)** located on front bottom of engine **(b)** using special tool.

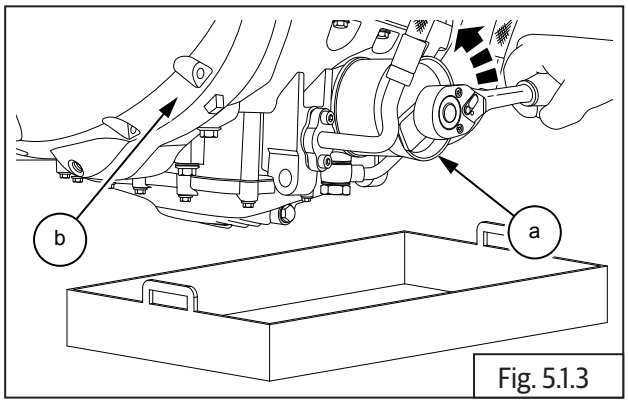

Fig. 5.1.3

SPL	Part No: ST30294/a
	Part Name: Oil filter wrench with Ratchet

5.1.3. Starter Motor

⚠ CAUTION

Ensure battery cables are disconnected.

Ensure that the ignition and kill switch are in OFF position.

- Lift the rubber cover slowly, loosen and remove Hex nut **(M6) (a)** from starter motor **(b)** and disconnect positive (+) terminal.

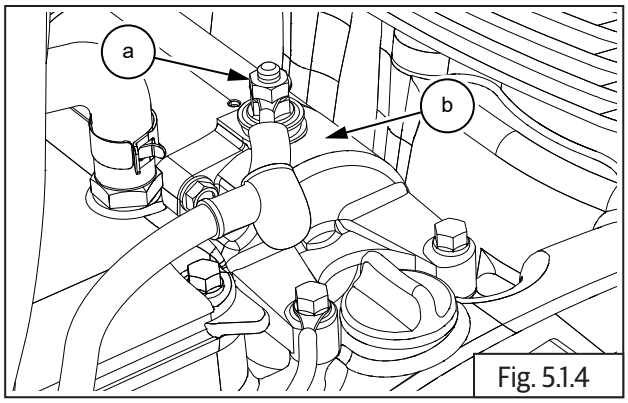

Fig. 5.1.4

	10 mm Double end spanner

- Loosen and remove 2 Nos. Hex flange head mounting bolts **(M6) (a)** holding starter motor **(b)** to crankcase **(c)**.
- Remove negative (-ve) cable from the mounting bolt.

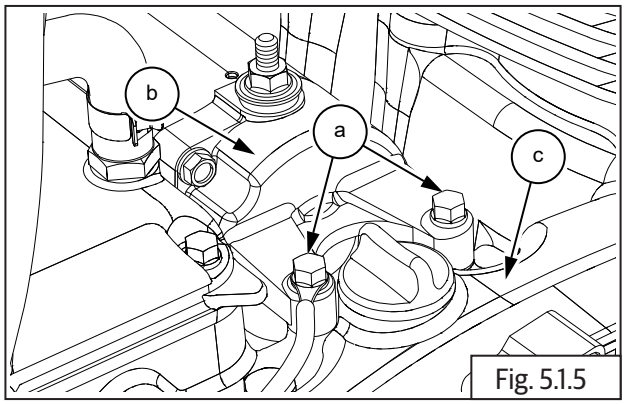

Fig. 5.1.5

	8 mm Socket with Ratchet

- Gently pull out and lift starter motor **(a)** from engine.

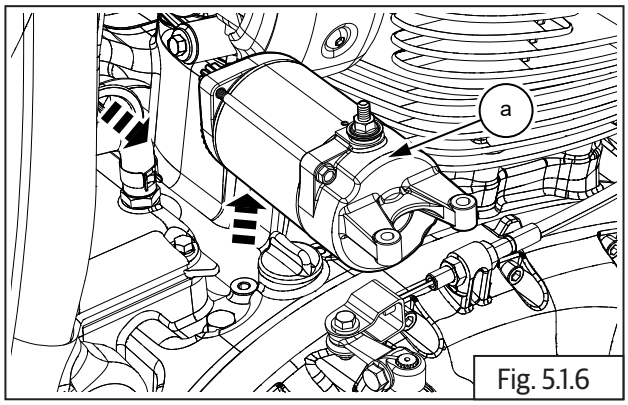

Fig. 5.1.6

NOTE

- *Do not tap on the starter motor while removing it. Tapping may damage the internal components.*

5.1.4. Breather Hose Connections

- Release the clamp **(a)** to disconnect breather hose **(b)** from air filter box **(c)**.

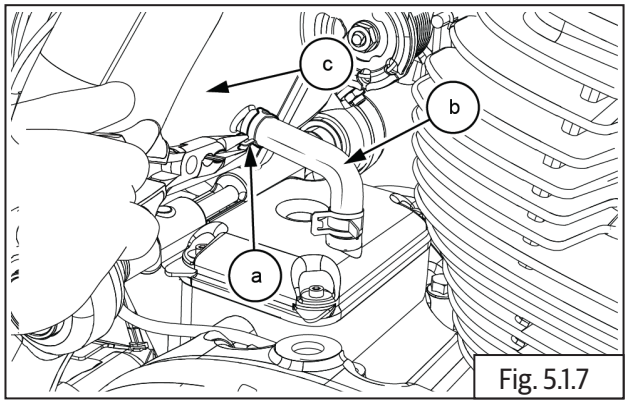

Fig. 5.1.7

	Nose plier

- Release the clamp **(a)** to disconnect breather hose **(b)** from breather box **(c)**.

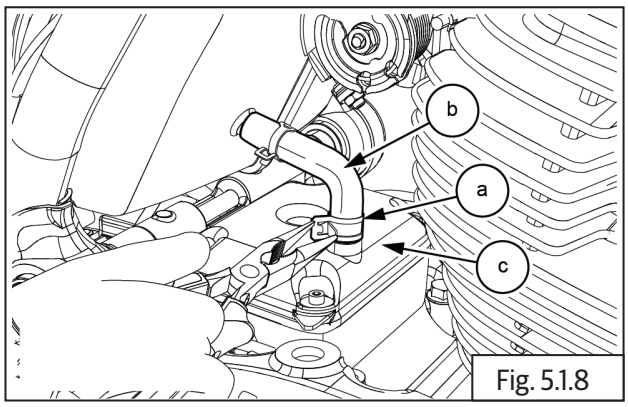

Fig. 5.1.8

	Nose plier

- Remove breather hose **(a)**.

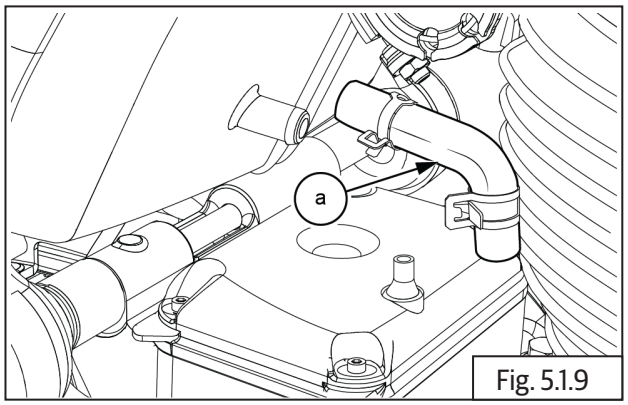

Fig. 5.1.9

5.1.5. Breather Box

- Loosen and remove the 5 Nos. Hex flange head bolts **(M6) (a)**.

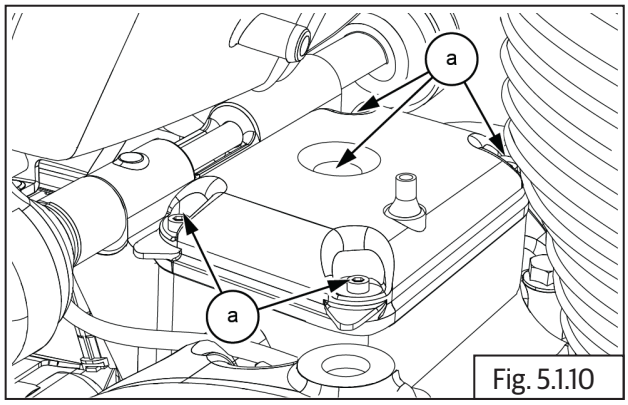

Fig. 5.1.10

	10 mm Socket with Ratchet

- Gently remove breather box cover **(a)** along with gasket **(b)**.

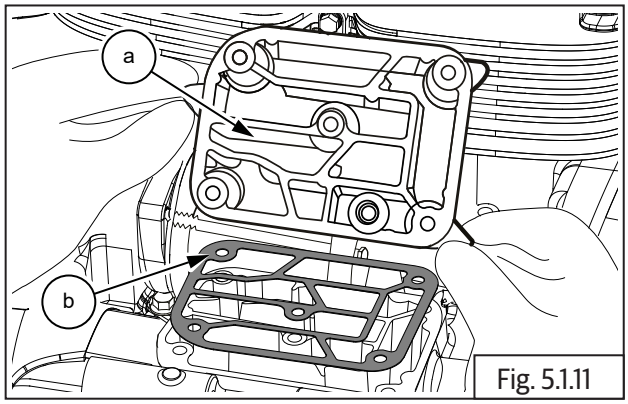

Fig. 5.1.11

5.1.6. Gear Shift Linkage

- Loosen and remove 2 Nos hex nuts **(a)** and **(b) (M6)** from gear shift linkage.

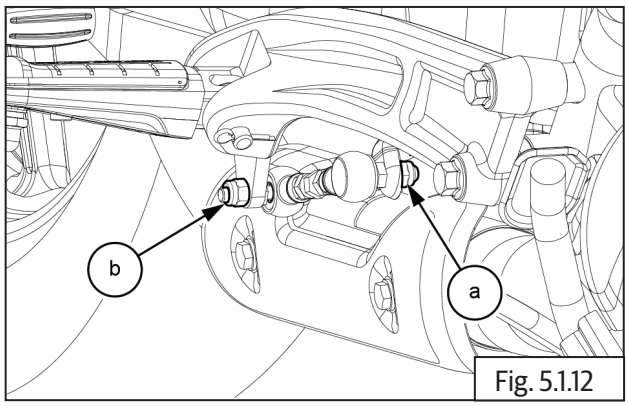

Fig. 5.1.12

	10 mm Socket with Ratchet

- Remove gear shift linkage **(a)** from LH control plate.

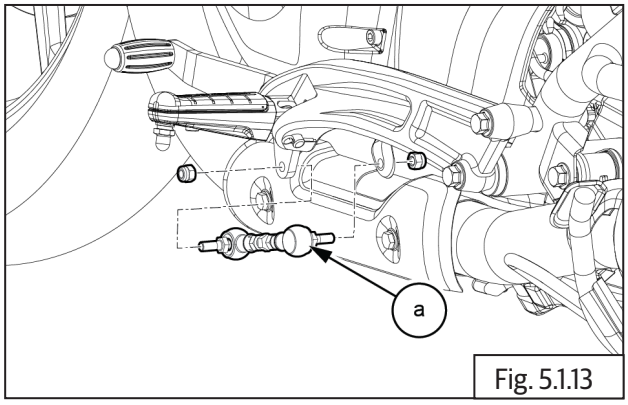

Fig. 5.1.13

5.1.7. Throttle Body Covers on LH and RH

- Loosen and remove 6 Nos. allen head screws **(M5) (a)** from LH and RH side throttle body cover.
- Remove the both covers **(b)** from throttle body

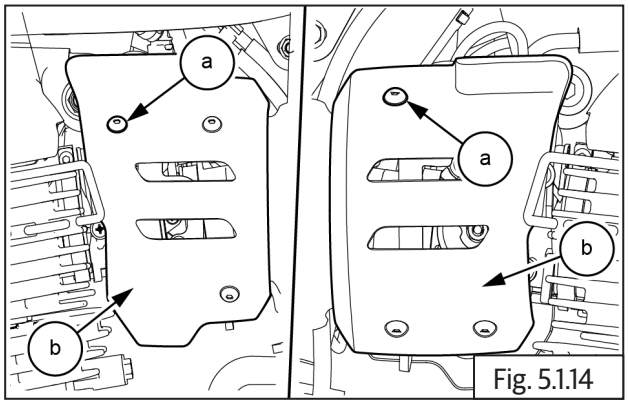

Fig. 5.1.14

	4 mm Allen Socket with Ratchet

5.1.8. Throttle Cable

- Disconnect throttle cables from throttle body.

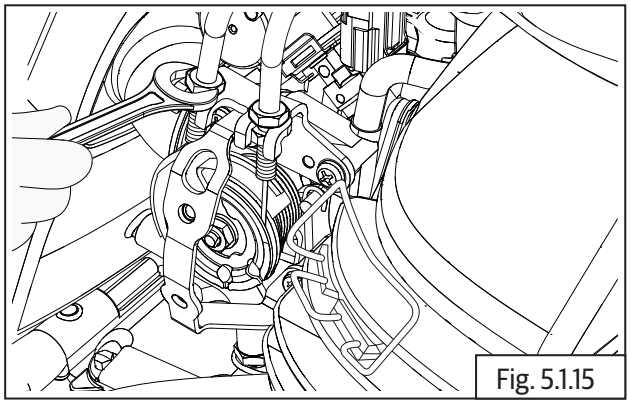
Fig. 5.1.15

5.1.9. Injector, TPS, MAPS, ISC Connections

Injector, Throttle Position Sensor (TPS), Manifold Absolute Pressure (MAP) Sensor and Idle Speed Controller (ISC) Connections

- Ensure ignition and stop switch are in OFF position.
- Disconnect throttle position sensor connector **(a)** from LH throttle body **(b)**.

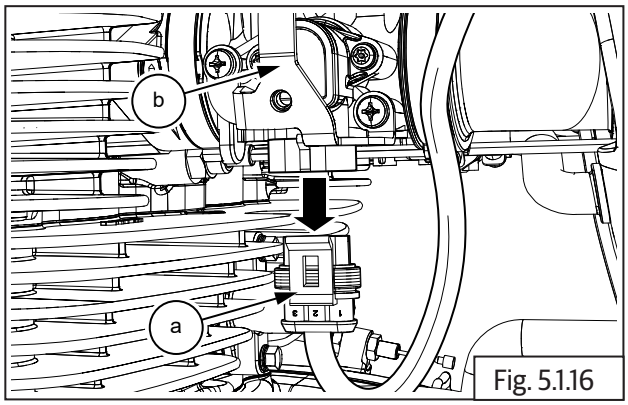

Fig. 5.1.16

- Gently press connector lock to disconnect fuel injector connectors **(a)** from LH and RH of throttle body **(b)**.

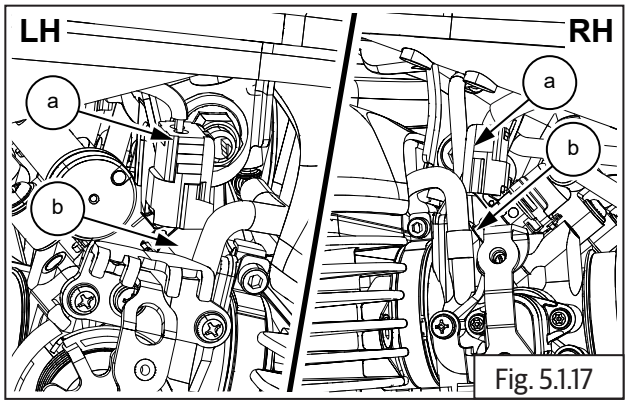

Fig. 5.1.17

- Disconnect idle speed control sensor (ISC) connector **(a)** from throttle body **(b)**.

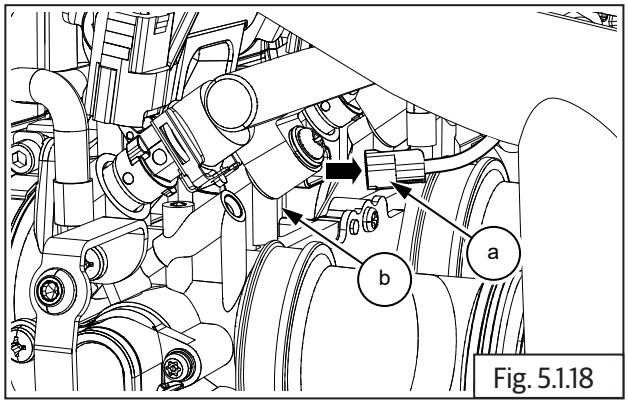

Fig. 5.1.18

5.1.10. Air Filter Hoses to Throttle Body

- Loosen both LH and RH worm clip screws **(M5) (a)** and separate the hose from air filter housing **(b)** to throttle body **(c)**.

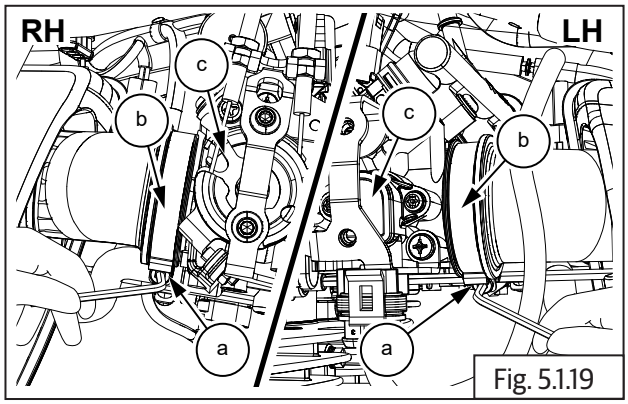

Fig. 5.1.19

	4 mm Allen key

5.1.11. Throttle Body

- Ensure TPS, MAP and ISC wiring connectors are disconnected.
- Ensure the air filter housing is disconnected.
- Ensure the throttle cables are disconnected.
- Disconnect hoses **(a)** from canister purge valve.

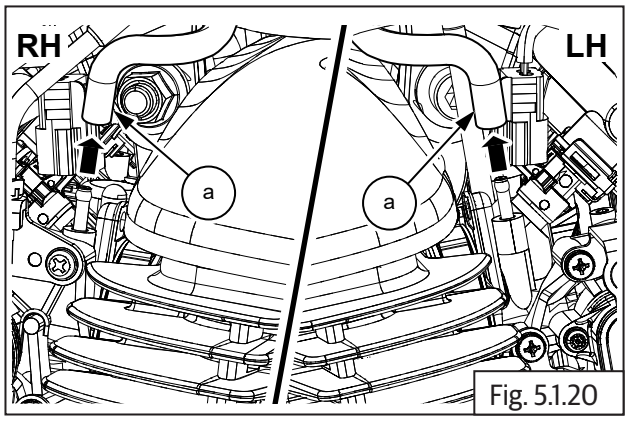

Fig. 5.1.20

- Loosen LH and RH worm clip screws **(M5) (a)** to disconnect throttle body from inlet manifolds.

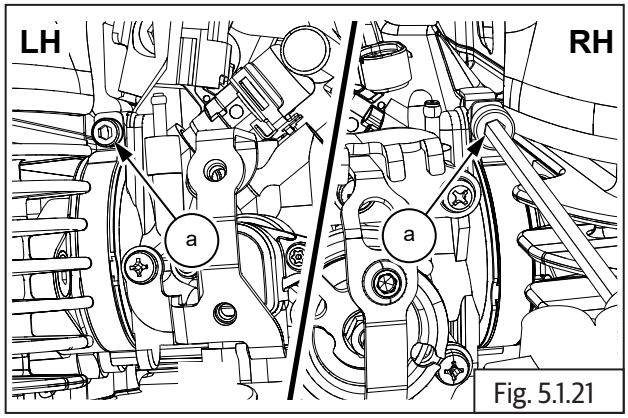

Fig. 5.1.21

	4 mm Allen key

5.1.12. Inlet Manifold Rubber Flanges

- Loosen and remove 4 Nos. Countersunk socket head bolts **(M5) (a)** located on inlet manifold of engine.

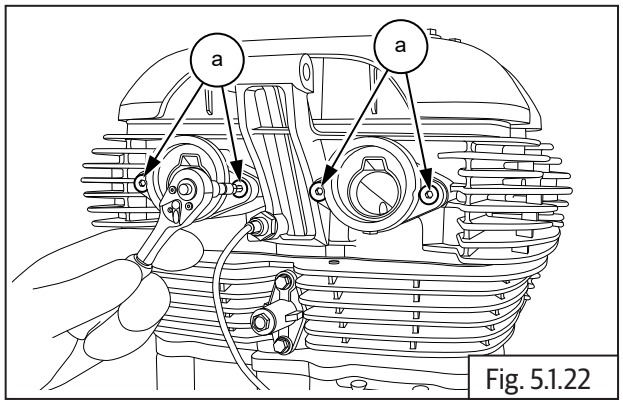

Fig. 5.1.22

	4 mm Allen socket with Ratchet

- Remove 2 Nos. inlet manifold rubber flange **(a)** from engine.

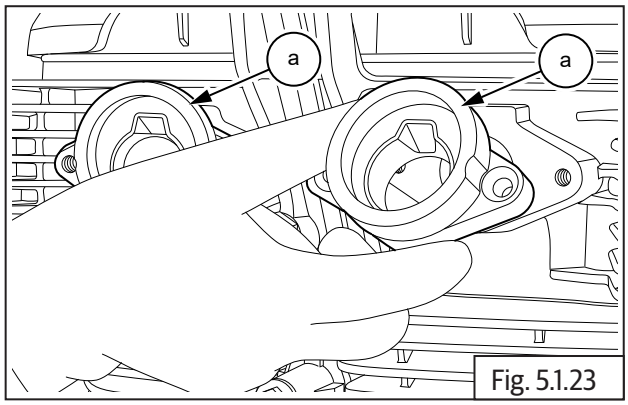

Fig. 5.1.23

5.1.13. Spark Plug Suppressor Caps on LH and RH

- Gently pull out the spark plug suppressor caps from the spark plugs LH & RH.

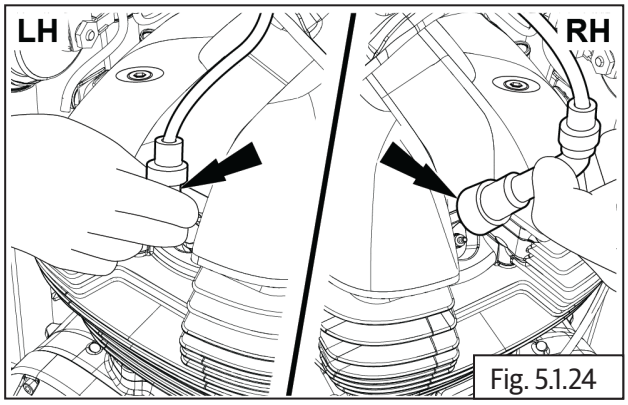

Fig. 5.1.24

5.1.14. Spark Plugs

⚠ CAUTION

Ensure that the ignition and kill switch are in OFF position.

Before removing the spark plugs, blow away any dirt accumulated in the spark plug area with compressed air to prevent it from falling into cylinder head.

- Loosen and remove spark plug **(a)** from RH cylinder head.

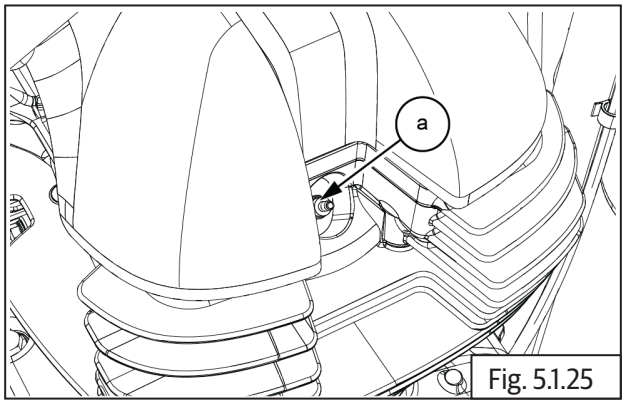

Fig. 5.1.25

	16 mm Socket with Ratchet

- Repeat the procedure to remove LH spark plug.

5.1.15. Clutch Cable on Clutch Cover

- Disconnect clutch cable assembly **(a)** from clutch cover **(b)**. Refer clutch cable dismantling procedure.

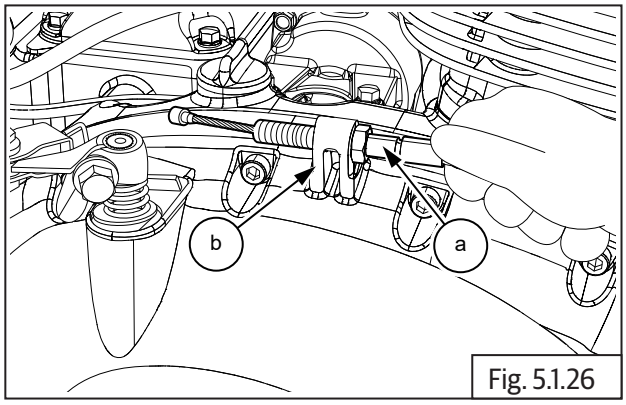

Fig. 5.1.26

5.1.16. Clutch Actuating Lever Assembly

- Loosen and remove Hex head bolt **(M6) (a)** from clutch actuating lever assembly **(b)**.

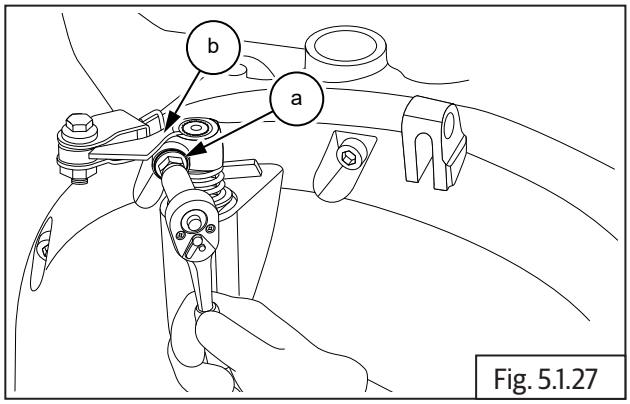

Fig. 5.1.27

	10 mm Socket with Ratchet

- Rotate clutch actuating lever **(a)** in clockwise direction to release tension in spring **(b)**.

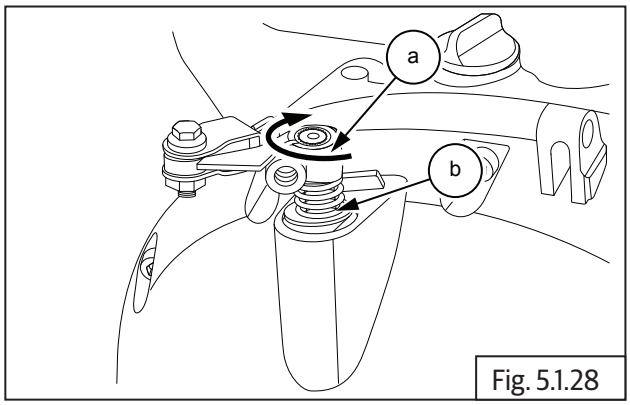

Fig. 5.1.28

- Remove clutch actuating lever **(a)** from clutch shaft **(b)** on cover.

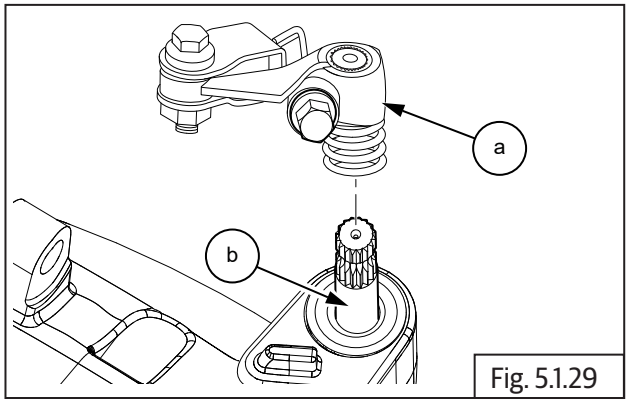

Fig. 5.1.29

	Wedge

NOTE
• *Use a suitable wedge to slightly expand the slot in the clutch actuating arm and gently lift from the shaft.*

5.1.17. Clutch Cover

- Loosen and remove 14 Nos. Hex socket screws **(M6) (a)** in a crisscross pattern to remove clutch cover **(b)** from motorcycle RH.

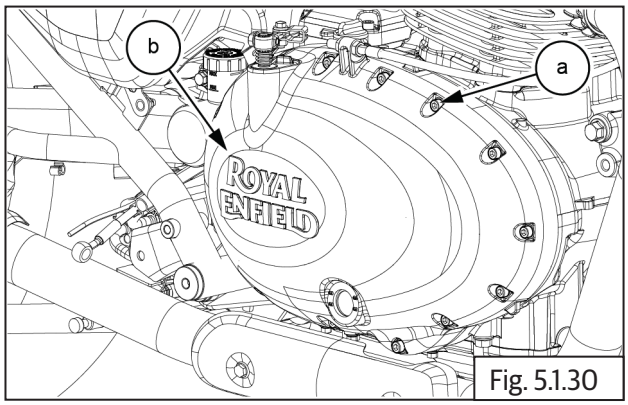

Fig. 5.1.30

	5 mm Allen socket with Ratchet

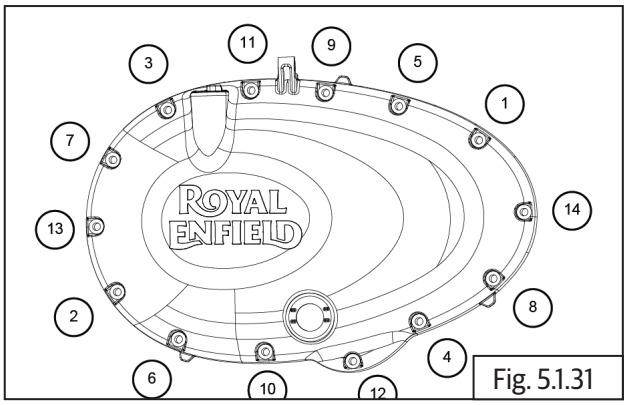

Fig. 5.1.31

- If the cover is jammed in the engine, gently tap on the tabs **(a)** provided on the cover using a plastic/ rubber mallet.

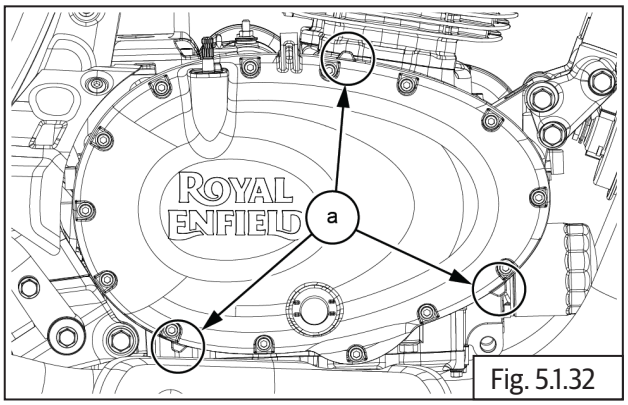

Fig. 5.1.32

	Plastic/Rubber mallet

- Remove gasket **(a)** and dowel pins **(b)** from clutch cover/engine.

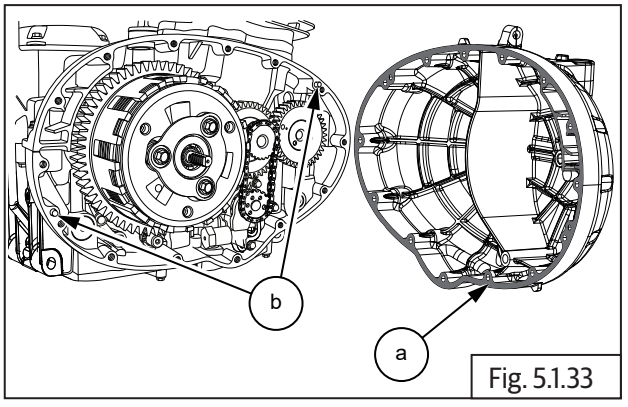

Fig. 5.1.33

⚠ CAUTION
Do not use a sharp tool to scrap the gasket material from the joint faces. **If required scrap only with a soft and blunt tool.**

5.1.18. Clutch Actuating Shaft

- Gently remove the E clip **(a)** and washer **(b)** from the bottom of the clutch actuating shaft inside clutch cover.

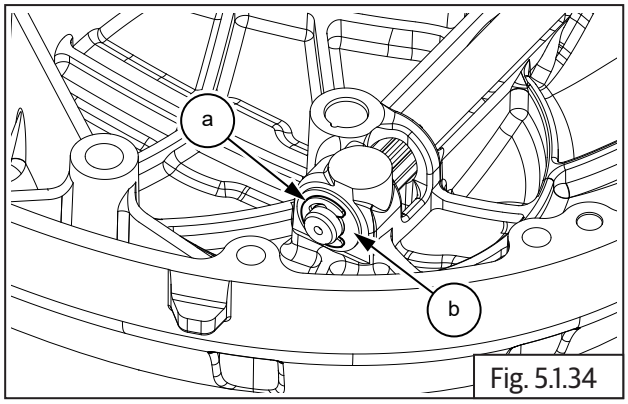

Fig. 5.1.34

	Nose plier

- Remove oil seal **(a)** along with washer **(b)** from outer clutch case.

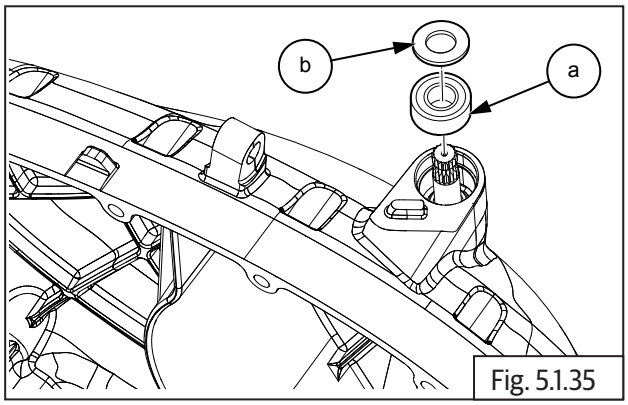

Fig. 5.1.35

- Gently pull out clutch actuating shaft **(a)** from clutch cover **(b)**.

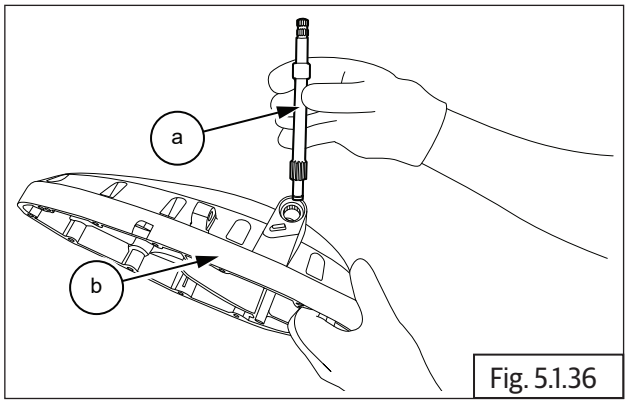

Fig. 5.1.36

- Remove needle roller bearings **(a)** from clutch cover with special tool.

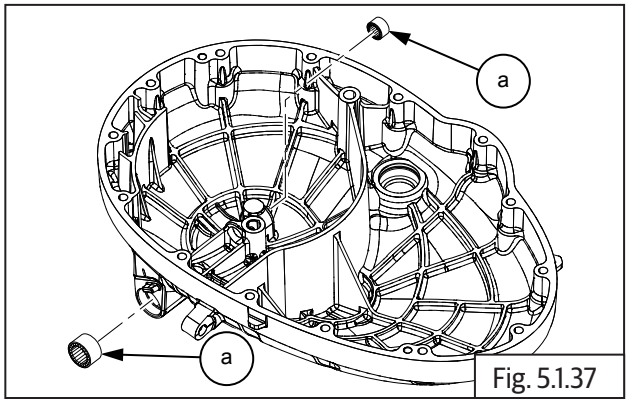

Fig. 5.1.37

SPL 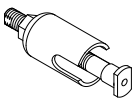	Part No: ST30265/a
	Part Name: Clutch Actuating Shaft Top Bearing Puller

SPL 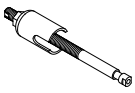	Part No: ST30263/a
	Part Name: Clutch Actuating Shaft Bottom Bearing Puller

5.1.19. Oil Level Window

- Remove the circlip **(a)** on the oil level window inside clutch cover.

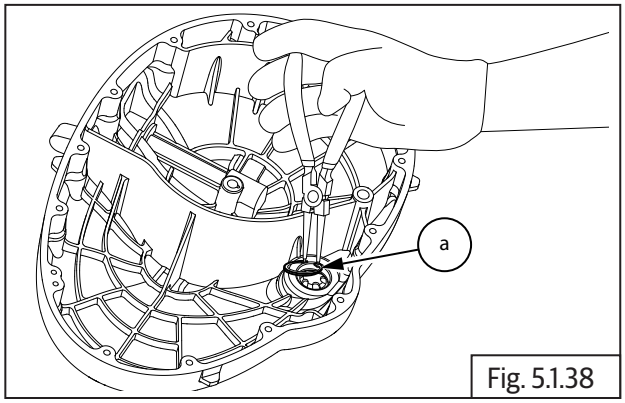

Fig. 5.1.38

	Circlip plier

- Gently press oil window **(a)** from outer side to remove from clutch cover.

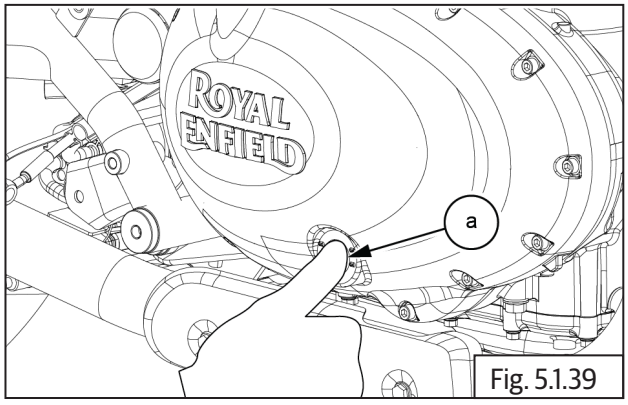

Fig. 5.1.39

5.1.20. Clutch Plates

⚠ CAUTION

Bolts are under spring tension. Loosen bolts progressively and slowly until spring tension is completely released.

- Loosen 3 Nos. Hex flange head bolts **(M6) (a)** on the pressure plate evenly and slowly until tension is released completely.

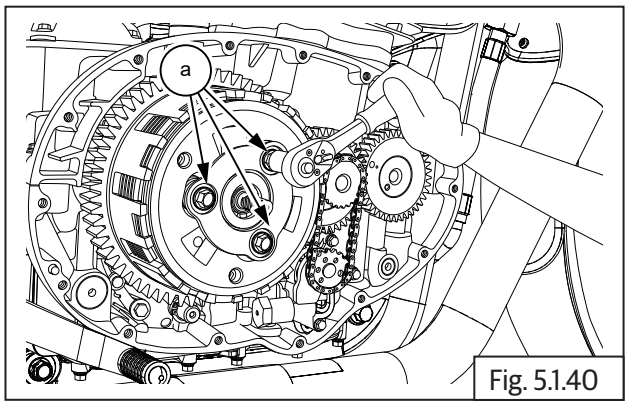

Fig. 5.1.40

	10 mm Socket with Ratchet

- Hold pressure plate **(a)** and remove the bolts **(b)**.
- Remove pressure plate and spring **(c)** from clutch hub.

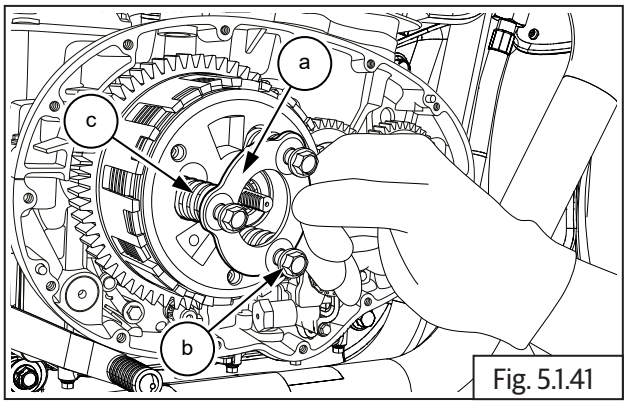

Fig. 5.1.41

- Remove clutch hub **(b)** along with 2 friction plates, 1 steel plate and pull rod **(a)** from the clutch bell.

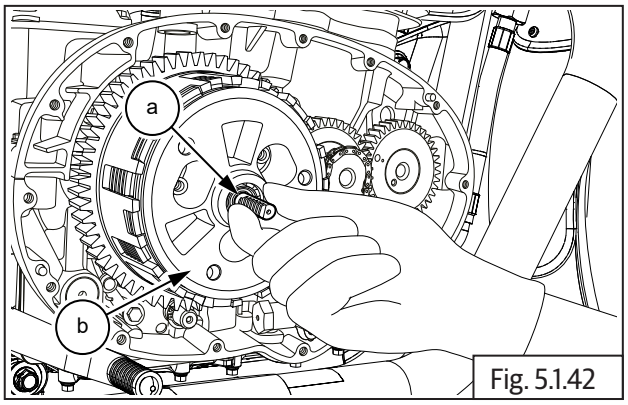

Fig. 5.1.42

- Remove the pull rod from the inner side of clutch bell.
- Remove 1st friction plate **(a)**, steel plate **(b)** and 2nd friction plate **(c)** from clutch hub **(d)**.

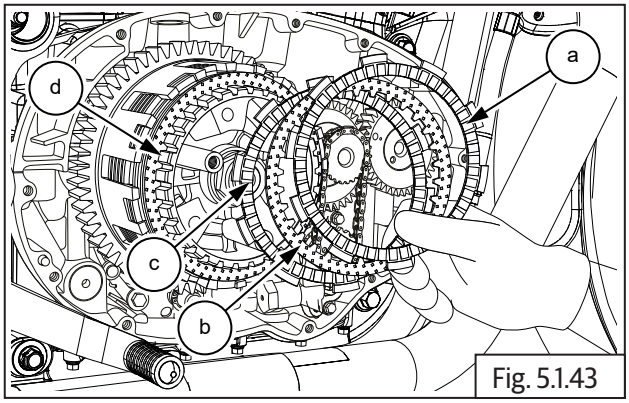

Fig. 5.1.43

- Locate special tool **(a)** on clutch center **(b)** and ensure it is seated fully on the splines.
- Hold the clutch center firmly and remove Hex "U" nut **(M17) (b)** by rotating clockwise.

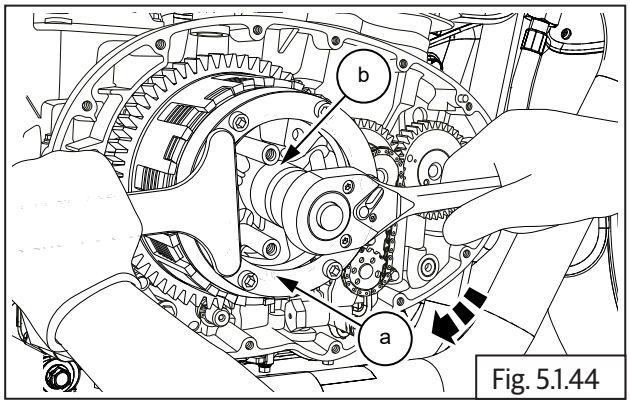

Fig. 5.1.44

⚠ CAUTION

Hex "U" nut is a left hand thread. Wrong rotation may damage the threads.

SPL	Part No: ST30266/a
	Part Name: Clutch holder

	24 mm Socket with Ratchet

- Remove Hex U nut **(M17) (a)** from counter shaft

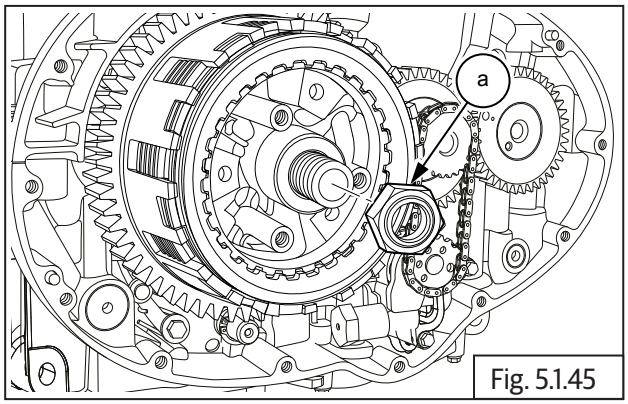

Fig. 5.1.45

	24 mm Socket with Ratchet

- Remove washer **(a)** from counter shaft.

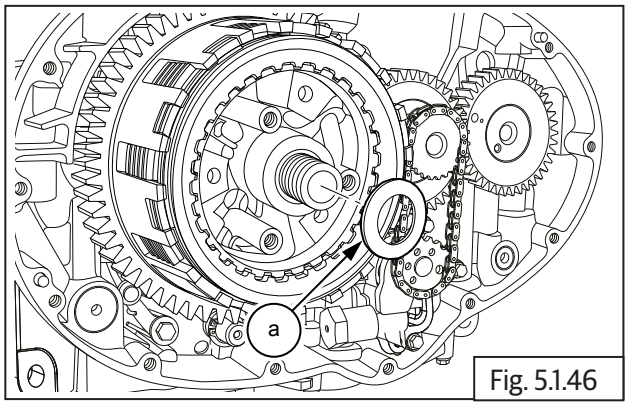

Fig. 5.1.46

- Remove special tool and pull out clutch bell assembly **(a)** from the counter shaft along with the remaining 6 plates **(b)** (3 each friction and steel plates) from the clutch housing.

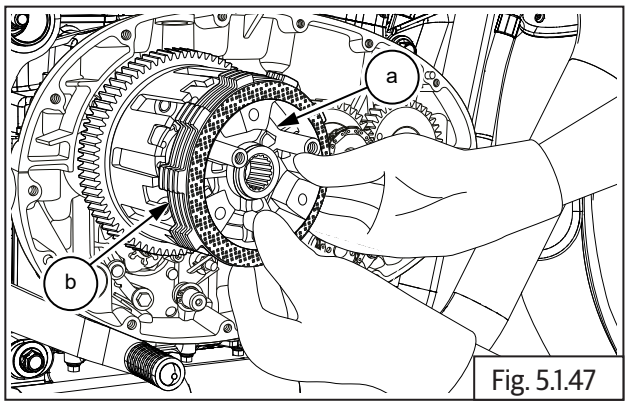

Fig. 5.1.47

NOTE

- *If the plates are to be reused, suitably mark the plates so that they can be reassembled in the same sequence as it was before dismantling.*

- Remove thrust washer **(a)** from counter shaft.

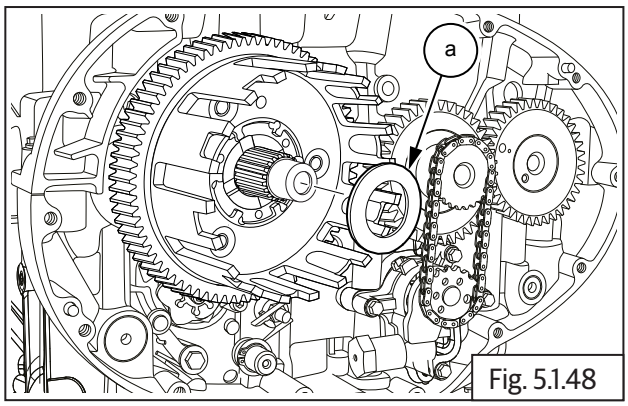

Fig. 5.1.48

- Remove clutch housing **(a)** from counter shaft.

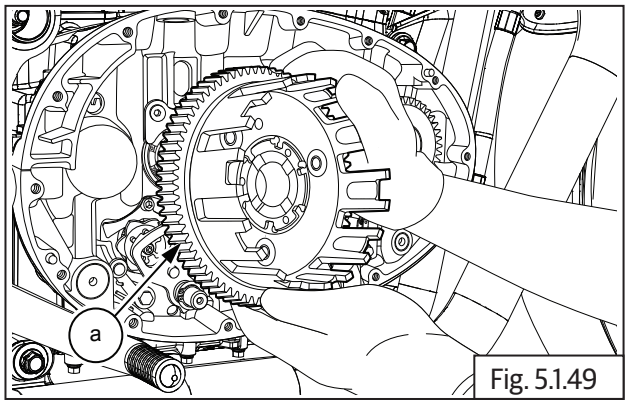

Fig. 5.1.49

- Remove the needle bearing **(a)**.

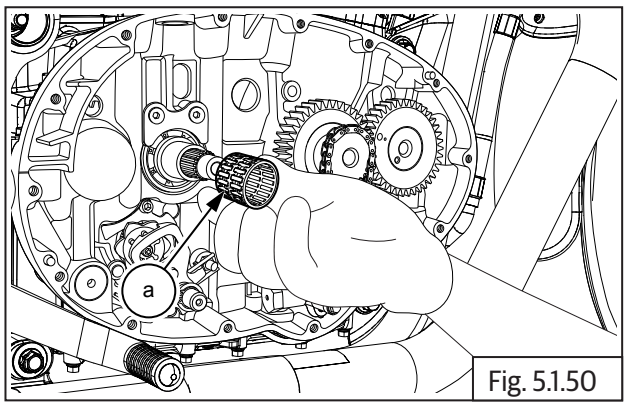

Fig. 5.1.50

- Remove collar bush **(a)** from counter shaft.

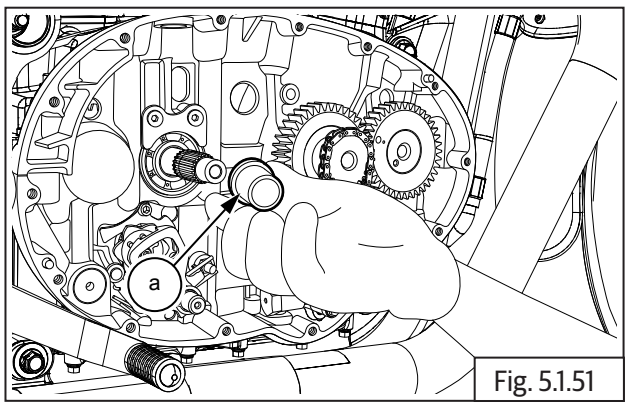

Fig. 5.1.51

5.1.21. Oil Pump

- Loosen and remove Hex flange bolt **(M6) (a)** on oil pump sprocket.

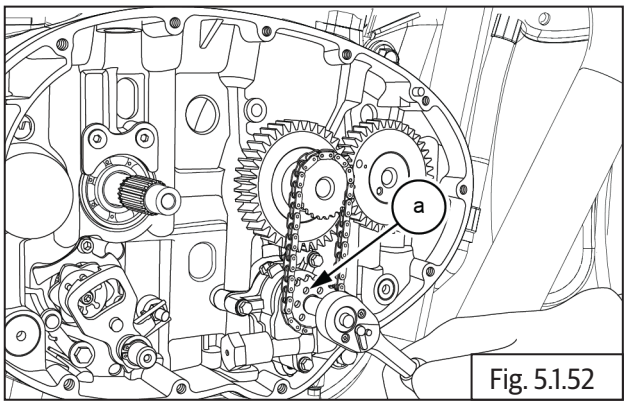

Fig. 5.1.52

	8 mm Socket with Ratchet

- Gently pull out the sprocket **(a)** from oil pump shaft.
- Release and remove chain **(b)** from the teeth on crankshaft sprocket **(c)**.

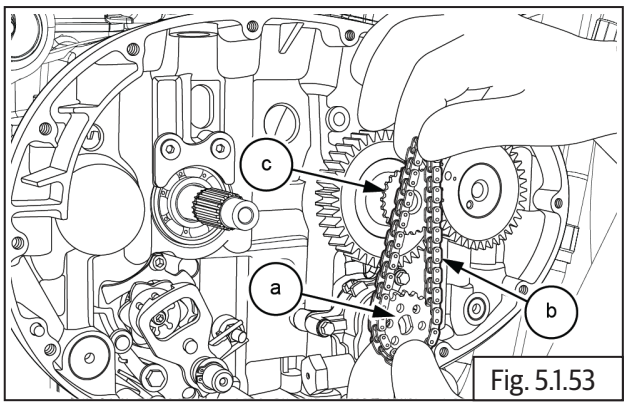

Fig. 5.1.53

- Loosen and remove 4 Nos. Hex flange head bolts **(M6) (a)** to separate oil pump from crankcase.

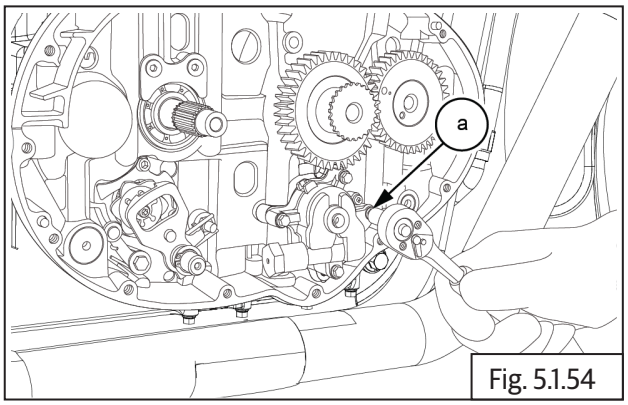

Fig. 5.1.54

	8 mm Socket with Ratchet

- Remove the oil pump **(a)**.

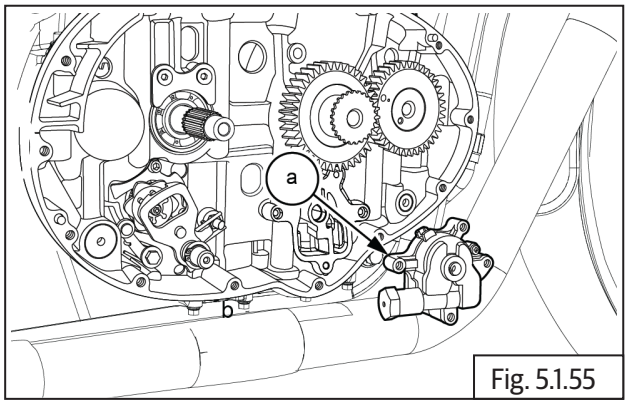

Fig. 5.1.55

NOTE
• *The oil pump does not have any serviceable parts, hence as to be replaced only as a complete assembly.*

5.1.22. Gear Shifter Shaft

- Remove the circlip **(a)** from shifter shaft **(b)** on engine LH side.

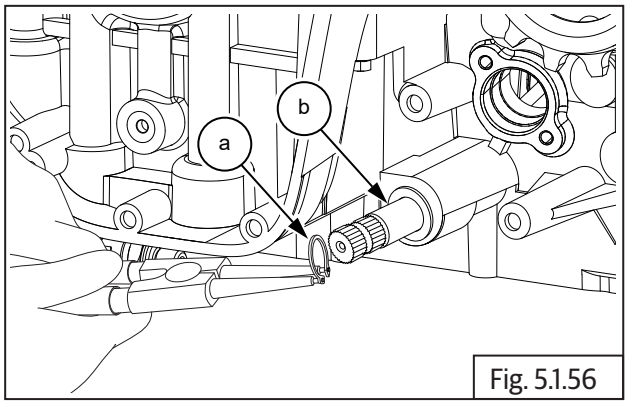

Fig. 5.1.56

	Circlip plier

- Remove the washer **(a)** from shifter shaft.

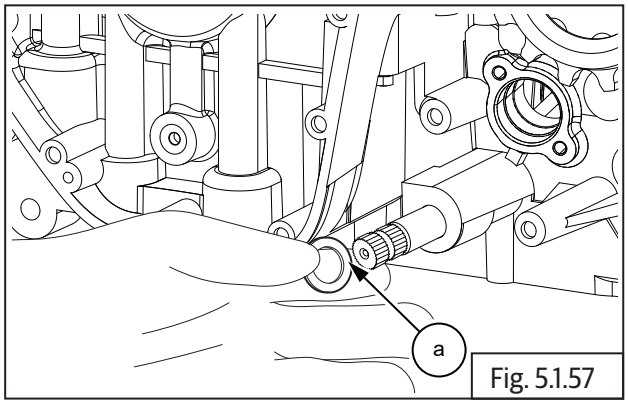

Fig. 5.1.57

- Gently pull out shifter shaft assembly **(a)** from engine RH side.

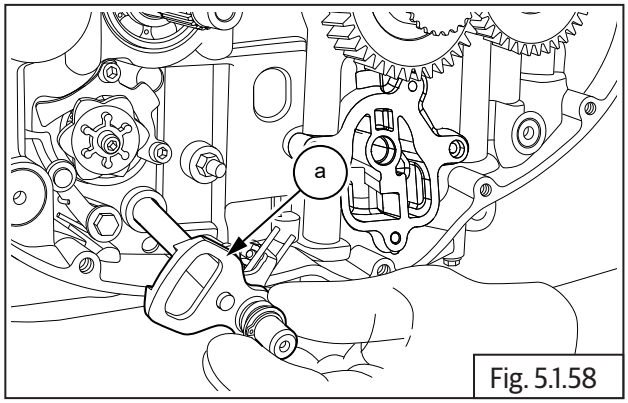

Fig. 5.1.58

- Remove circlip **(a)** from shorter end of shifter shaft **(b)**.

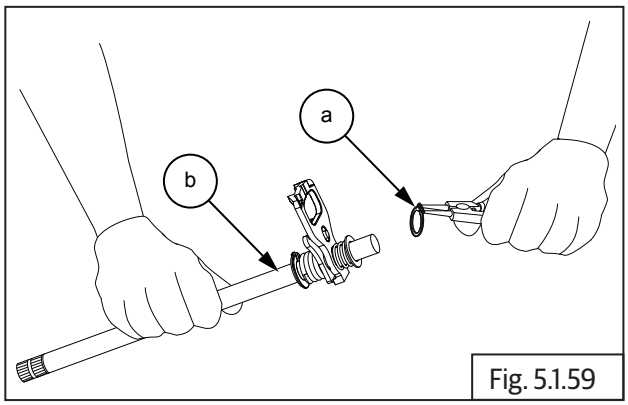

Fig. 5.1.59

	Circlip plier

- Remove washer **(a)** from shorter end of shifter shaft **(b)**.

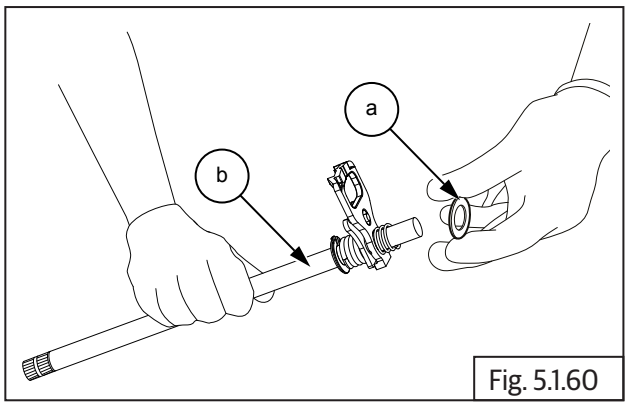

Fig. 5.1.60

- Remove spring **(a)** from shifter shaft **(b)**.

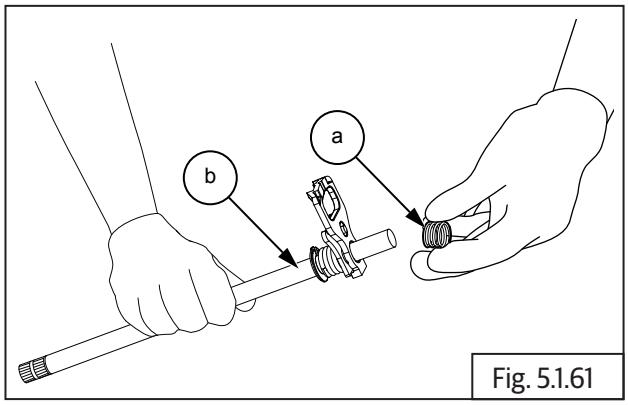

Fig. 5.1.61

- Remove plate **(a)** from shorter end of shifter shaft **(b)**.

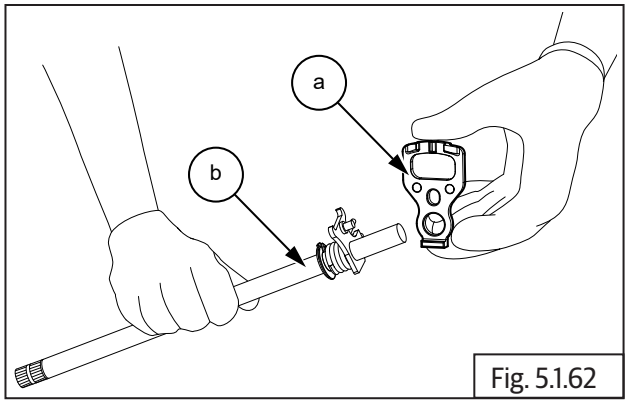

Fig. 5.1.62

- Remove circlip **(a)** from longer end of shifter shaft **(b)**.

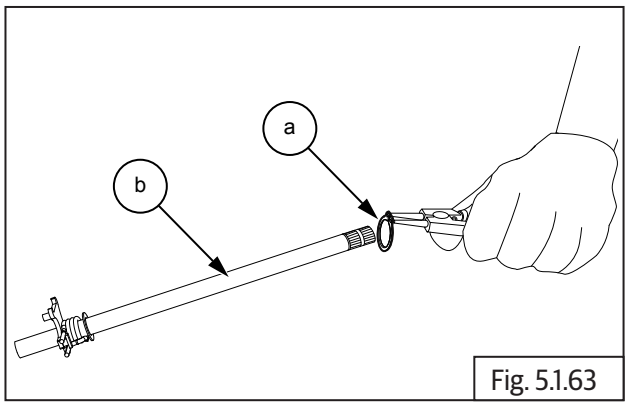

Fig. 5.1.63

	Circlip plier

- Remove washer **(a)** from longer end of shifter shaft **(b)**.

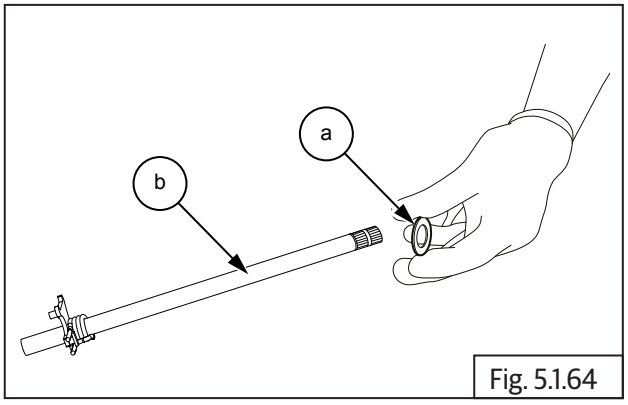

Fig. 5.1.64

- Expand spring lugs and pull out spring **(a)** from longer end of shifter shaft **(b)**.

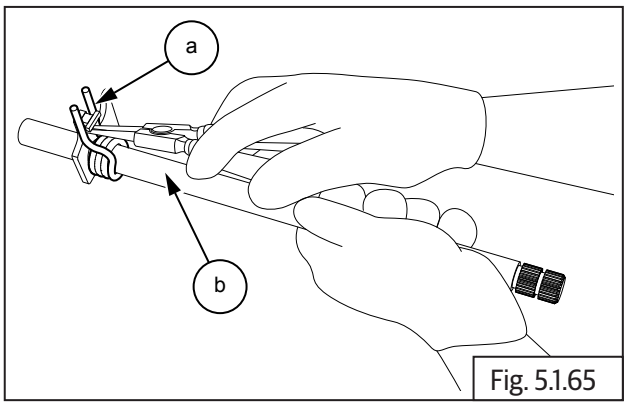

Fig. 5.1.65

	Circlip plier

5.1.23. Stator and GPS Wiring Connectors

NOTE
• *Ensure 2 Nos. black wiring connectors* located on *rear side of engine are disconnected.*

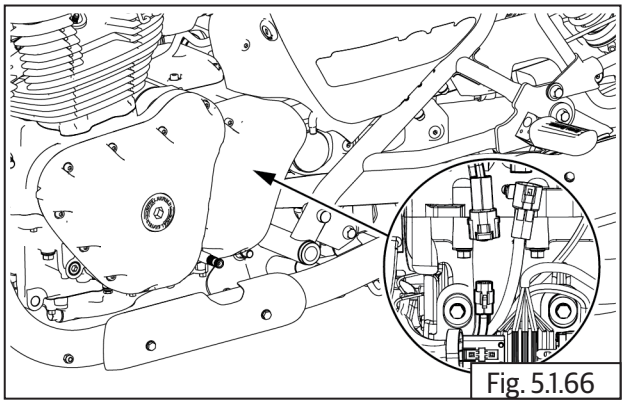
Fig. 5.1.66

5.1.24. FD Sprocket Cover

- Loosen and remove 3 Nos. Hex socket head screws **(M6) (a)** from FD sprocket cover **(b)** on the LH side of engine, in the order shown (1, 2 & 3).

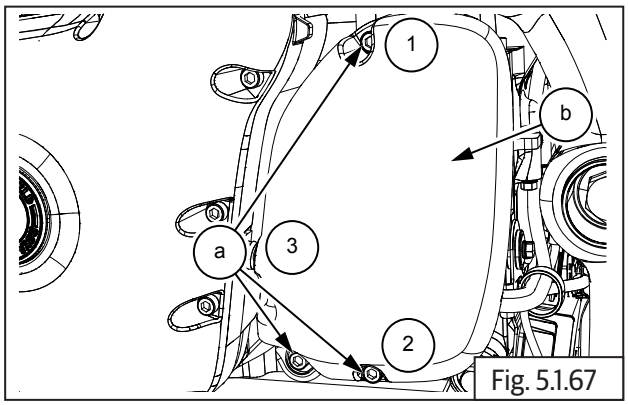

Fig. 5.1.67

	5 mm Allen socket with Ratchet

- Gently pull out FD sprocket cover **(a)**.

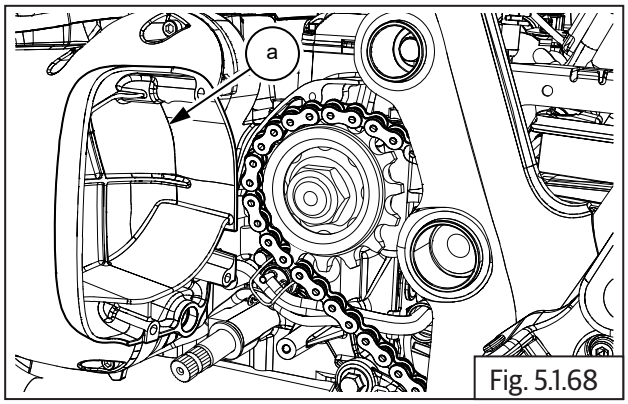

Fig. 5.1.68

5.1.25. Gear Position Sensor (GPS)

- Loosen and remove 2 Nos. Hex flange head bolts **(M6) (a)** to disconnect gear position sensor holder.

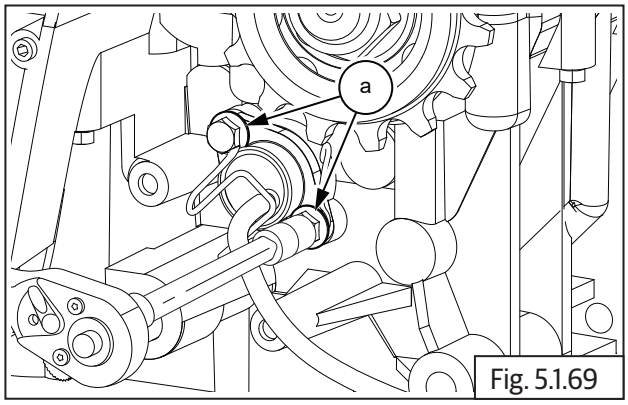

Fig. 5.1.69

	10 mm Socket with Ratchet

- Remove cable holder **(a)**.

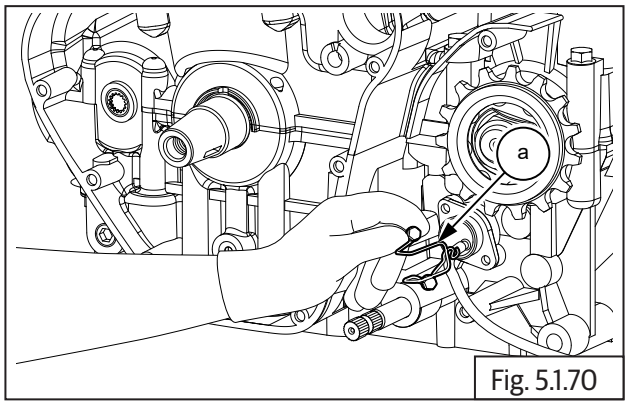

Fig. 5.1.70

- Gently remove the gear position sensor **(a)** along with the gasket.

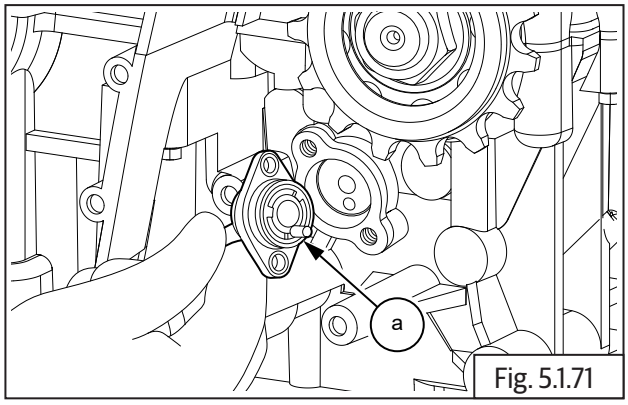

Fig. 5.1.71

5.1.26. FD Sprocket

- Loosen rear wheel and chain adjusters nuts (LH & RH) to increase chain slackness, Refer.
- Gently remove chain **(a)** from FD sprocket **(b)**.

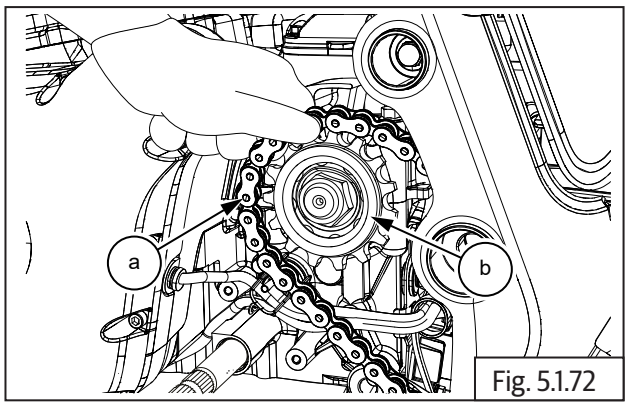

Fig. 5.1.72

- Straighten lock tab washer **(a)** located over FD sprocket **(b)**.

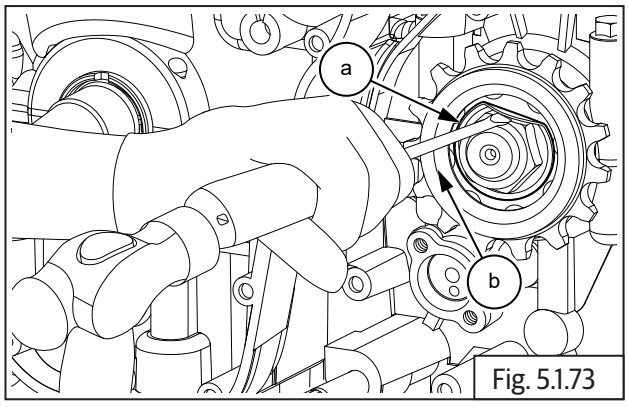

Fig. 5.1.73

	Chisel and Hammer

- Locate special tool over FD sprocket **(a)** and loosen hex "U" nut **(M20) (b)**.

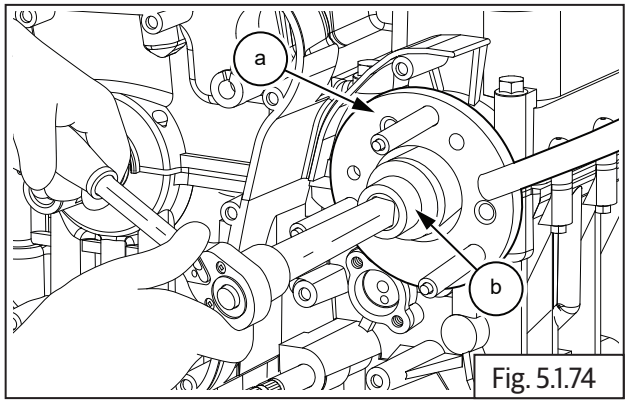

Fig. 5.1.74

SPL 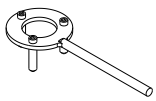	Part No: ST-27534-2
	Part Name: FD sprocket holder

	30 mm Socket with Ratchet

- Remove lock tab washer **(a)** from shaft.

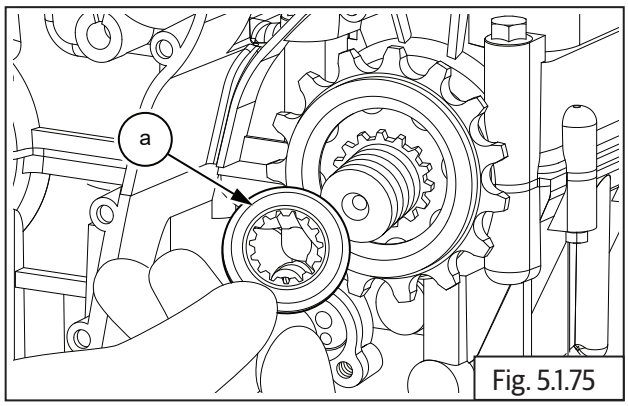

Fig. 5.1.75

- Remove FD sprocket **(a)** from drive shaft **(b)**.

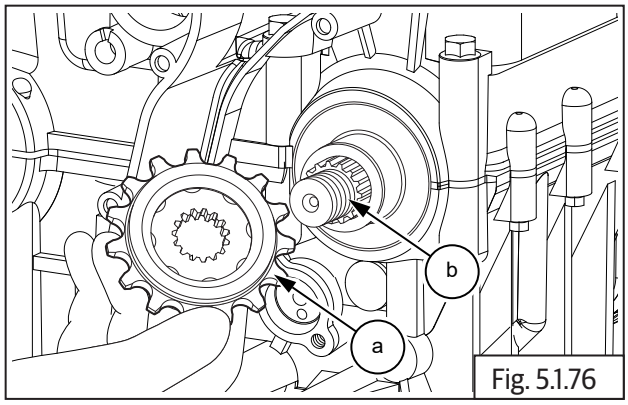

Fig. 5.1.76

- Gently remove spacer **(a)** from drive shaft.

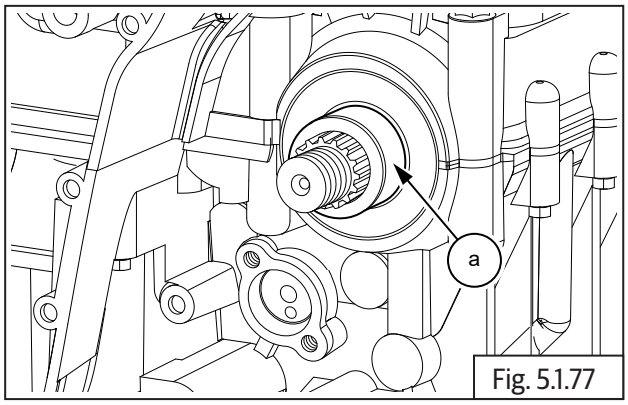

Fig. 5.1.77

- Remove oil seal **(a)** from drive shaft.

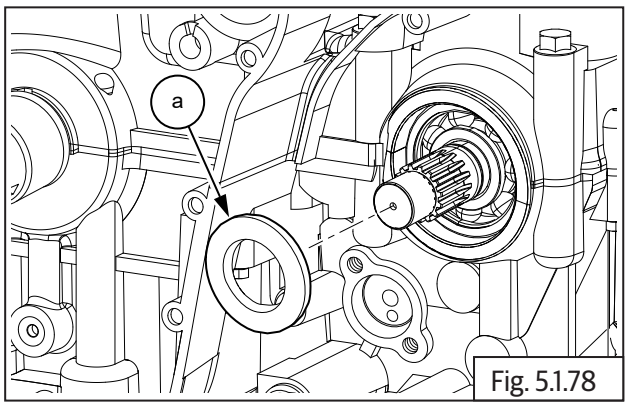

Fig. 5.1.78

5.1.27. Cylinder Head Cover

- Remove the following parts:
  - Side panels LH and RH.
  - Rider seat assembly.
  - Fuel tank assembly. Ensure the fuel is drained completely.
- Loosen ABS modulator bracket and support it suitably above the frame.
- Remove Horn assembly.
- Loosen ignition coil from frame and support suitably.

⚠ WARNING

Gasoline is extremely flammable and highly explosive. Please handle with care. Improper handling can lead to fatal accident OR serious injury. Always drain/fill fuel only in a well ventilated area.

Ensure there is no scope for flames OR sparks near by while draining/filling fuel.

- Loosen and remove 4 Nos. Hex flange head bolts **(M6) (a)** in crisscross pattern along with the rubber seals and washers.

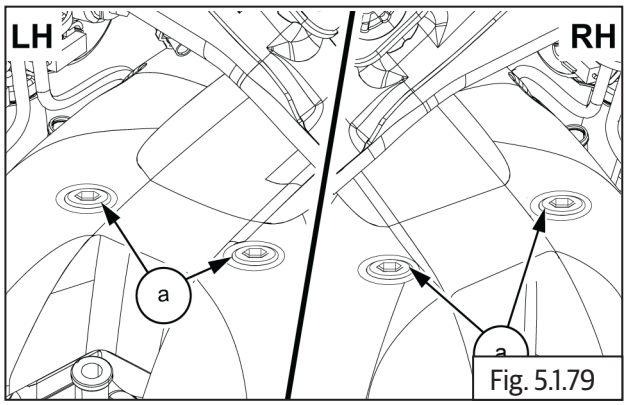

Fig. 5.1.79

	8 mm Socket with Ratchet

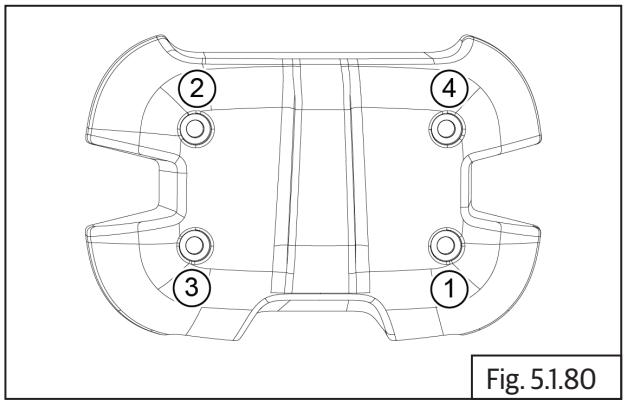

Fig. 5.1.80

- Gently remove rocker cover **(a)** from cylinder head **(b).**

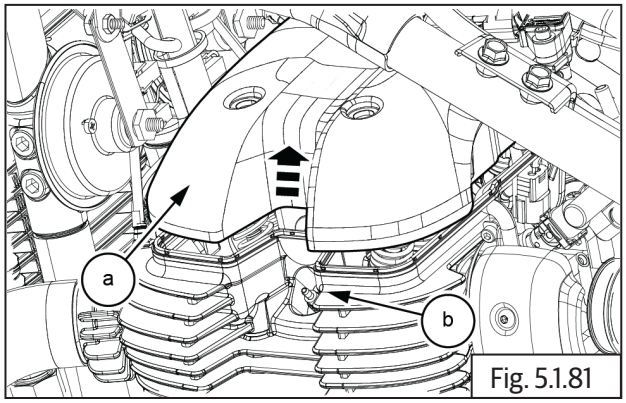

Fig. 5.1.81

- Remove rubber gasket **(a)** from rocker cover **(b)**.

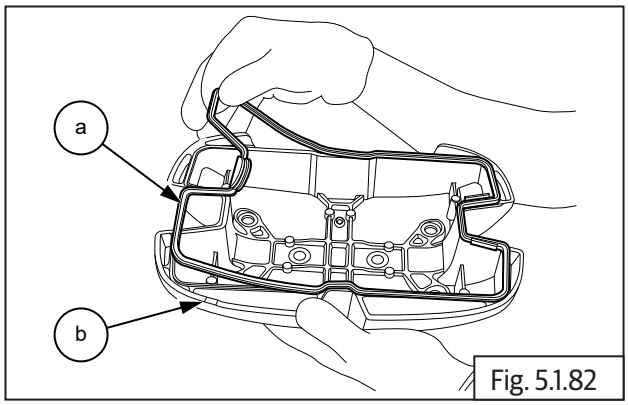

Fig. 5.1.82

5.1.28. Crankshaft Plug On Magneto Cover

- Remove crankshaft hole plug **(M34) (a)** from center of magneto cover **(b)**.

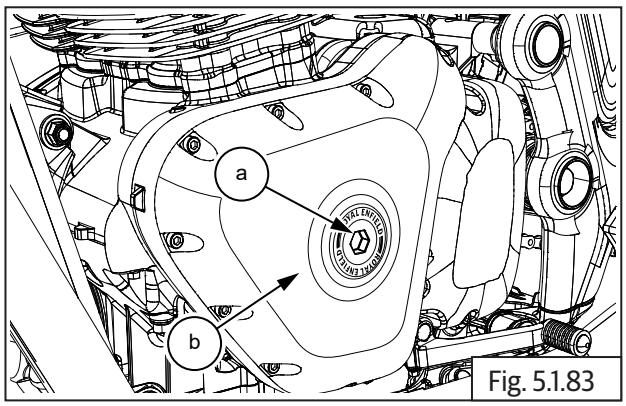

Fig. 5.1.83

	14 mm Allen Socket with Ratchet

- Remove O-ring **(a)** from crankshaft hole plug **(b)**.

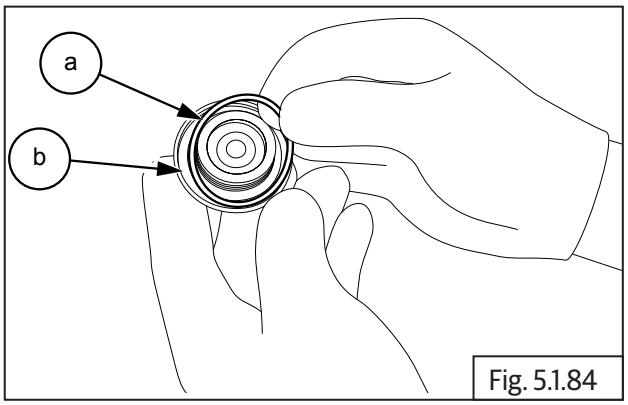

Fig. 5.1.84

5.1.29. Rocker Carrier LH from Cylinder Head

- Slowly rotate the magneto rotor until the reference mark "L" on the camshaft aligns with the cylinder head on the left-hand side.

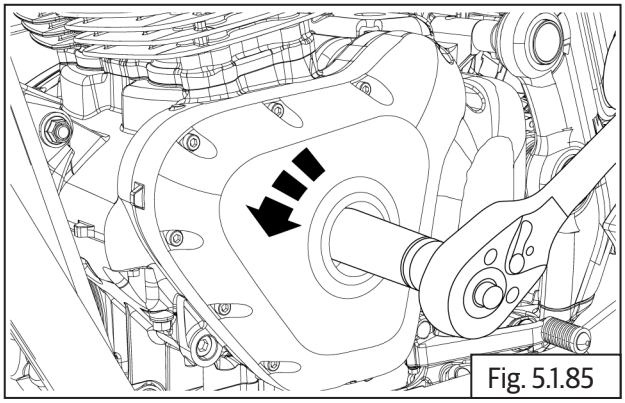
Fig. 5.1.85

	17 mm Socket with Ratchet

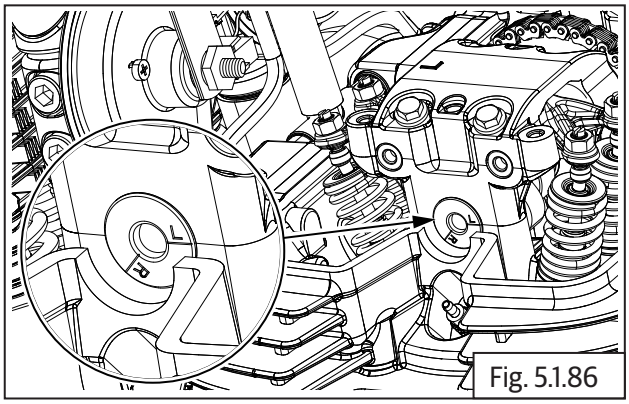
Fig. 5.1.86

- Loosen and remove 4 Nos. Hex flange head bolts **(M6) (a)** from rocker carrier LH.

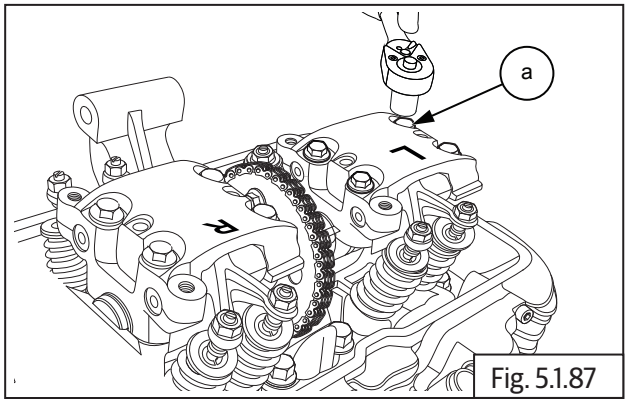

Fig. 5.1.87

	10 mm Socket with Ratchet

- Gently remove the rocker carrier LH **(a)** along with rocker arms from cylinder head.

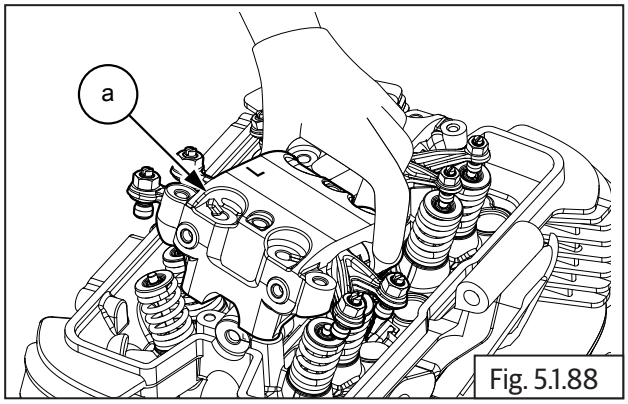

Fig. 5.1.88

- Thread in a suitable Hex flange bolt **(M6) (a)** into the rocker shaft and gently pull out the rocker shaft from rocker carrier LH **(b)**.
- Remove the rocker arms from carrier LH.

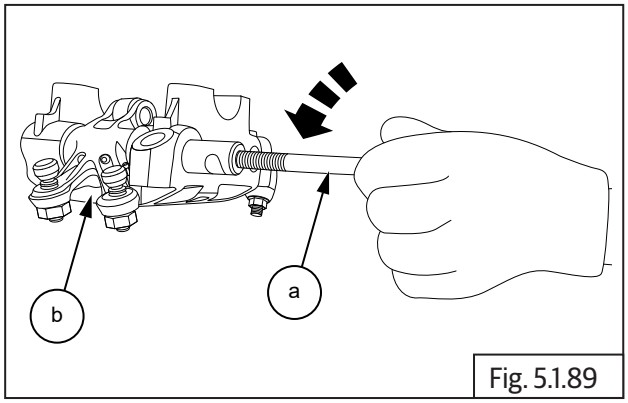

Fig. 5.1.89

5.1.30. Rocker Carrier RH from Cylinder Head

- Slowly rotate the magneto rotor until the reference mark "L" on the camshaft aligns with the cylinder head on the left-hand side.

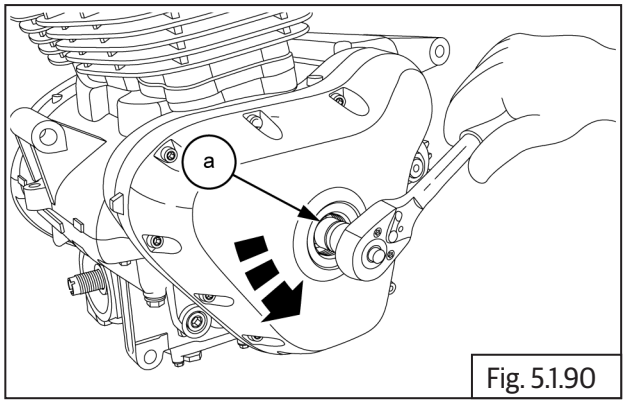

Fig. 5.1.90

	17 mm Socket with Ratchet

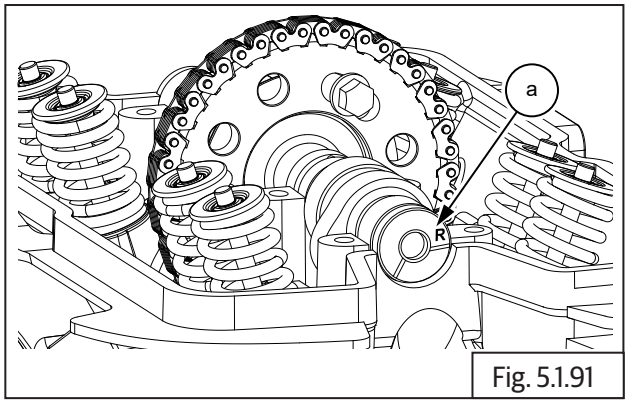

Fig. 5.1.91

- Loosen and remove 4 Nos. Hex head bolts **(M6) (a)** from rocker carrier RH and remove carrier along with rocker arms from cylinder head.

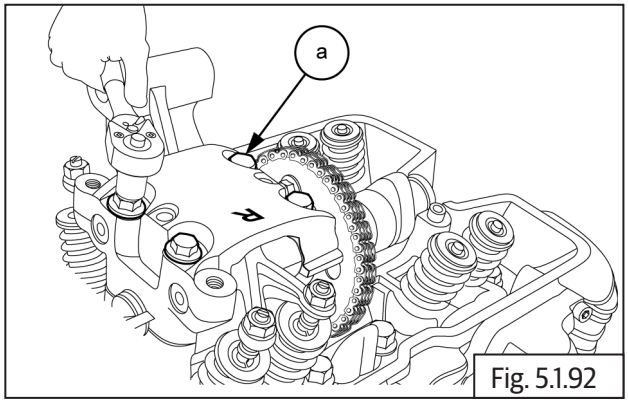

Fig. 5.1.92

	10 mm Socket with Ratchet

- Thread in a suitable Hex flange bolt **(M6) (a)** into the rocker shaft and gently pull out the rocker shaft from rocker carrier RH **(b)**.
- Remove the rocker arms from carrier RH.

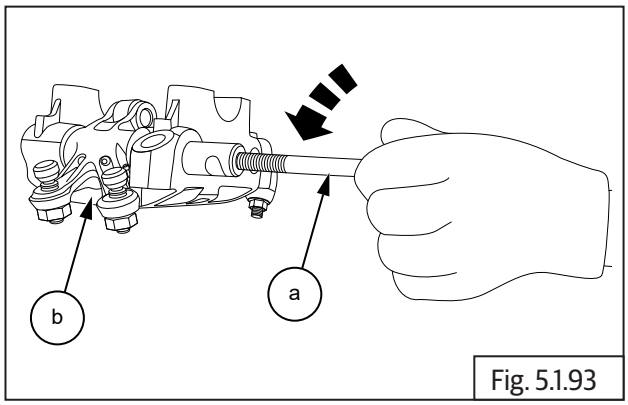

Fig. 5.1.93

5.1.31. Auto Chain Tensioner

- Loosen and remove Hex flange head bolt **(M6) (a)** from the auto chain tensioner.

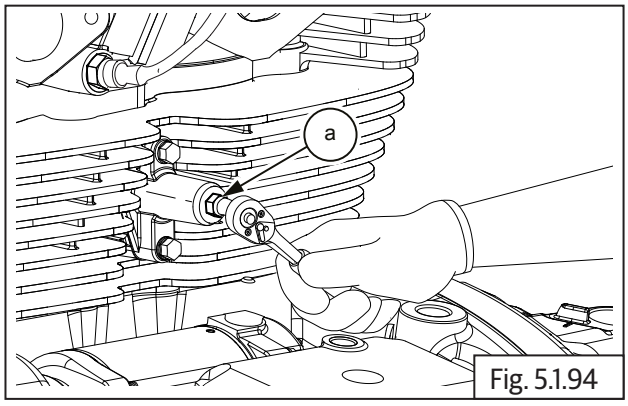

Fig. 5.1.94

	10 mm Socket with Ratchet

- Loosen and remove 2 Nos. Hex flange head bolts **(M6) (a)** to remove auto chain tensioner from cylinder barrel **(b)**.

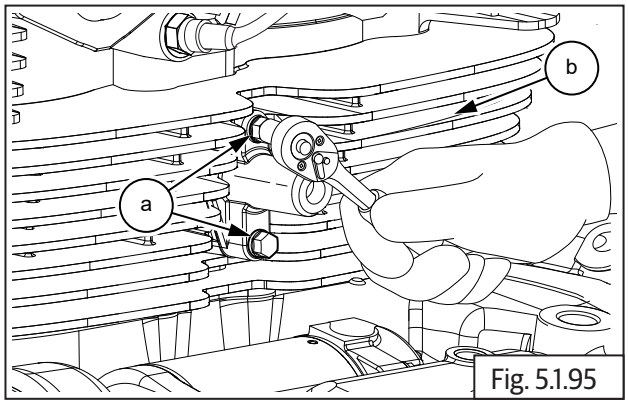

Fig. 5.1.95

	10 mm Socket with Ratchet

- Remove auto timing chain tensioner **(a)** from cylinder barrel along with gasket.

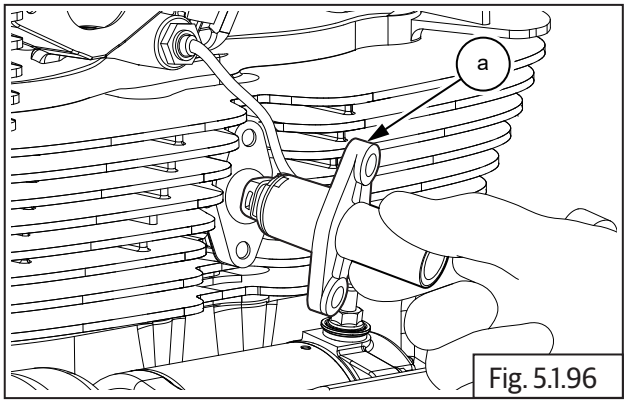

Fig. 5.1.96

5.1.32. Camshaft Sub Assembly

- Rotate magneto rotor **(a)** till one of Hex head bolts on cam chain sprocket appears at top most position.

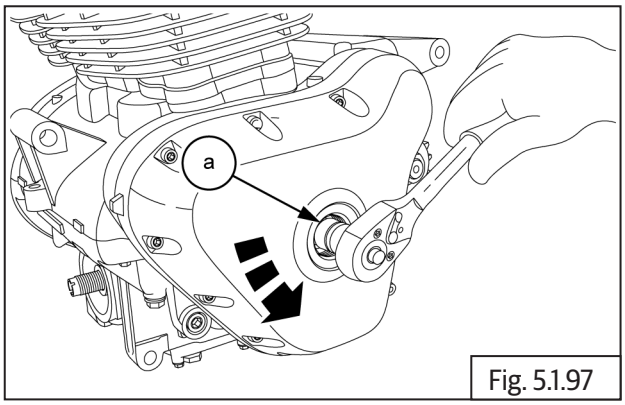

Fig. 5.1.97

	17 mm Socket with Ratchet

- Loosen and remove 1st Hex flange head bolt **(M8) (a)** from cam sprocket.

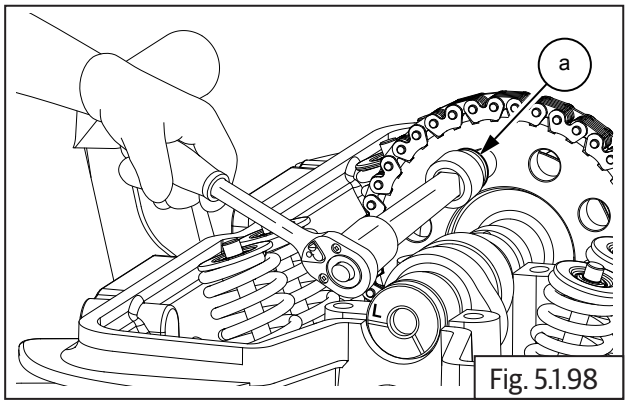

Fig. 5.1.98

	12 mm Socket with Ratchet

- Rotate magneto rotor **(a)** slowly till other bolt is visible at top most position.

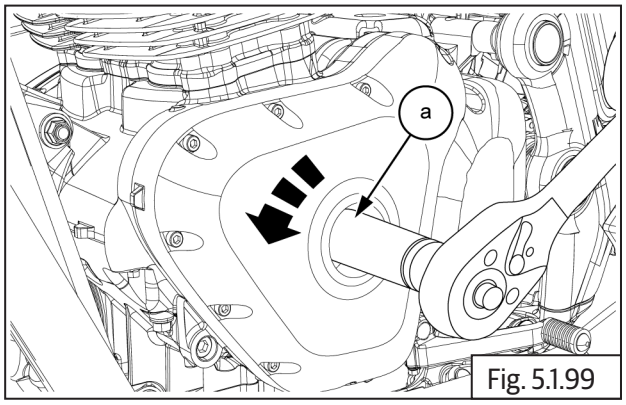

Fig. 5.1.99

	17 mm Socket with Ratchet

- Loosen and remove 2nd Hex head bolt **(M8) (a)** from cam sprocket.

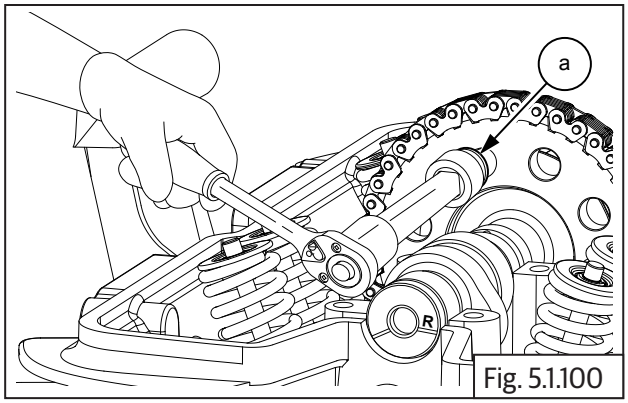

Fig. 5.1.100

	12 mm Socket with Ratchet

- Remove "C" washer **(a)** from groove in cylinder head LH to release cam shaft.

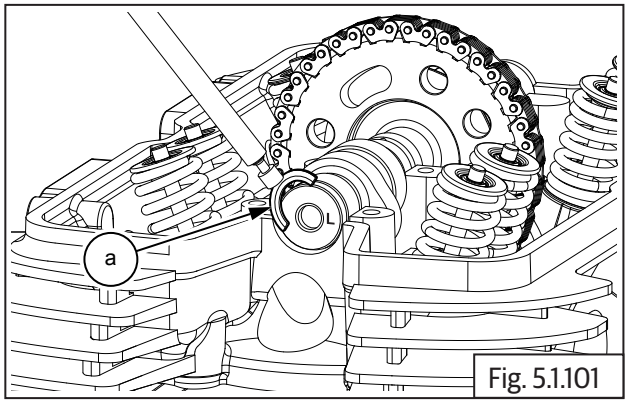

Fig. 5.1.101

	Magnetic stick

- Gently release the cam chain **(a)** from the cam sprocket **(b)**.

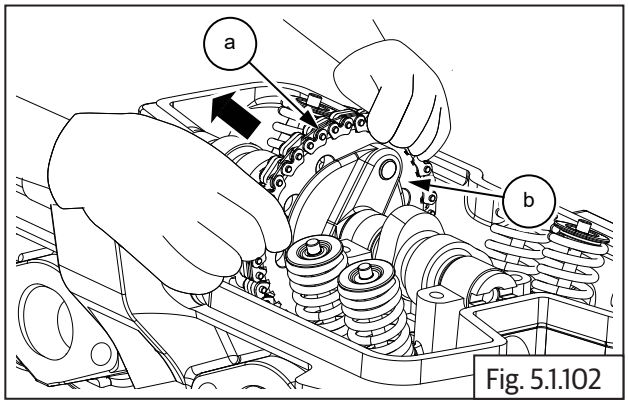

Fig. 5.1.102

- Gently lift camshaft with sprocket **(b)** and remove from cylinder head.
- Support cam chain **(a)** suitably while removing camshaft, to prevent it from falling into crankcase.

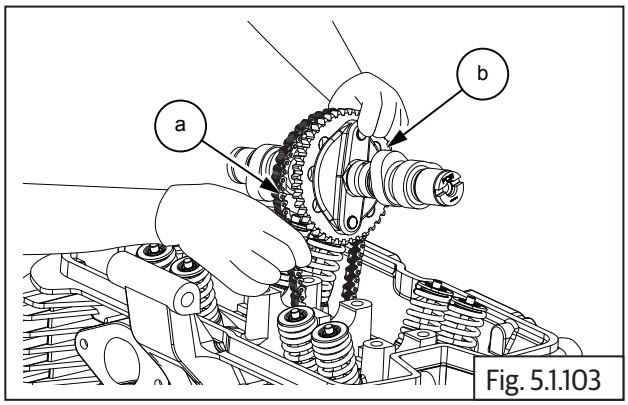

Fig. 5.1.103

- Remove sprocket **(a)** from camshaft.

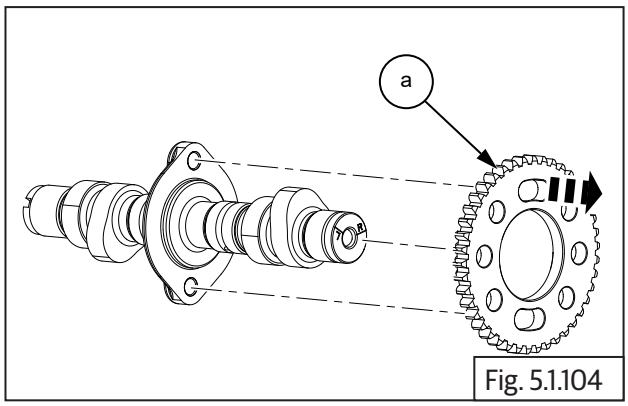

Fig. 5.1.104

5.1.33. Magneto Cover

- Loosen and remove 12 Nos. Hex socket head bolts **(M6) (a)** in crisscross pattern to remove magneto cover **(b)** from crankcase on LH side.

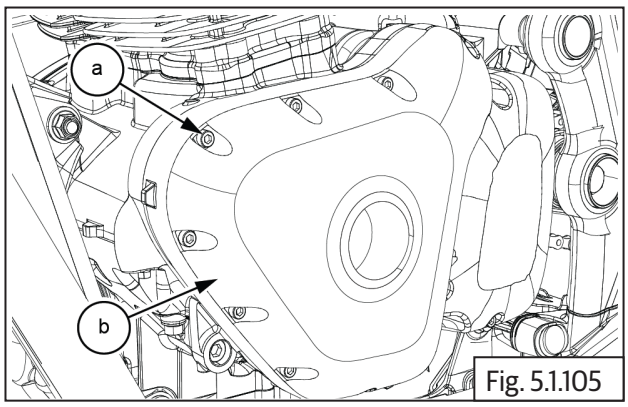

Fig. 5.1.105

	5 mm Allen socket with Ratchet

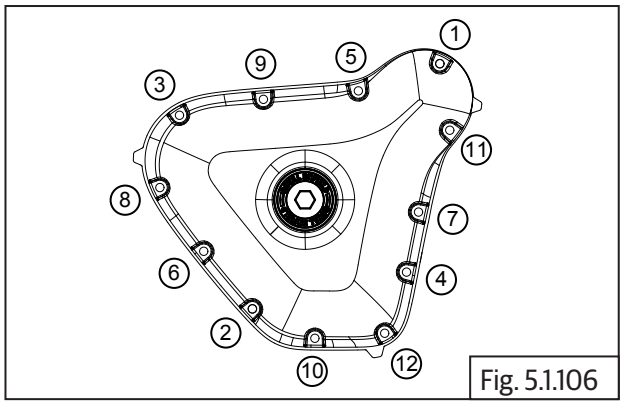

Fig. 5.1.106

- The magneto cover may be hard to remove from crankcase, due to the magnetic force from the magneto acting on the stator coil.
- Gently tap on the tabs **(a)** with a plastic / rubber mallet, on the inside edges of the magneto cover, to remove.

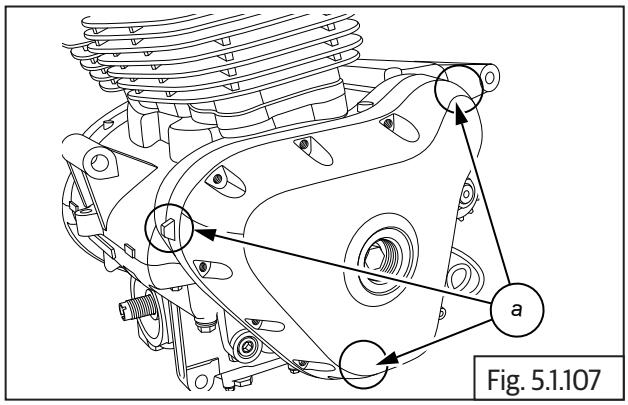

Fig. 5.1.107

	Plastic/Rubber mallet

- Remove the 2 Nos. dowel pins **(a)** and **(b)** from the crankcases/magneto cover.

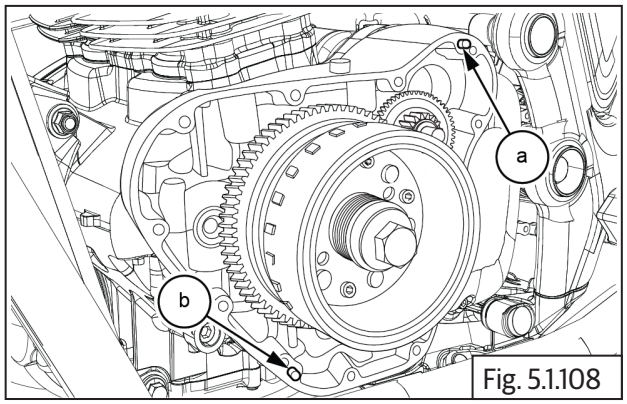

Fig. 5.1.108

- Remove gasket **(a)**.

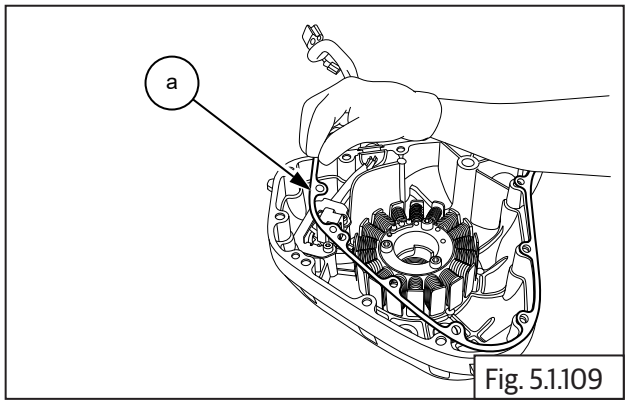

Fig. 5.1.109

⚠ CAUTION

Do not use a sharp tool to scrap the gasket material from the joint faces.

If required scrap only with a soft and blunt tool.

5.1.34. Stator Assembly with CPS

Stator Assembly with Crank Position Sensor

- Loosen and remove 3 Nos. Hex socket head screws **(M6) (a)** holding the stator assembly **(b)**.

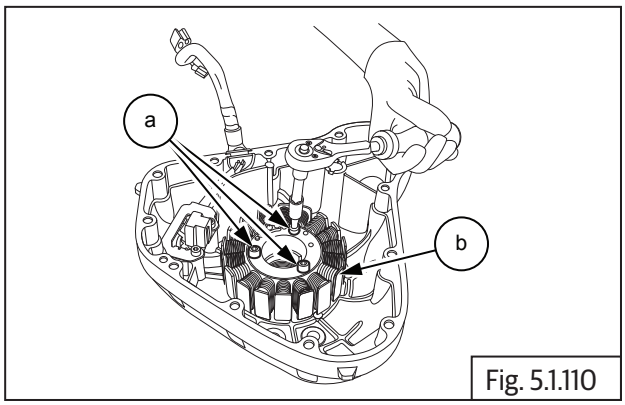

Fig. 5.1.110

	5 mm Allen socket with Ratchet

- Loosen and remove 2 Nos. Hex socket head screws **(M5) (a)** on guide plate **(b)** holding crank position sensor to magneto cover.

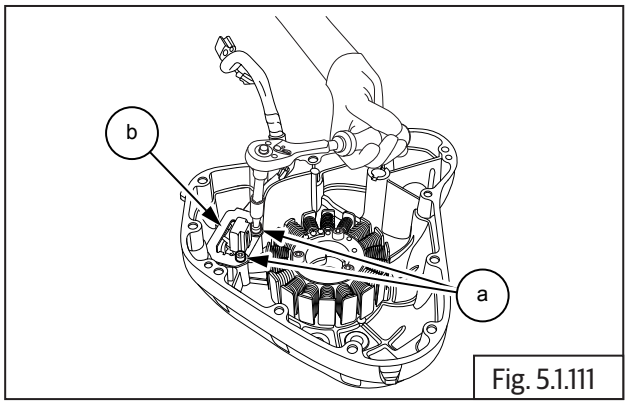

Fig. 5.1.111

	5 mm Allen socket with Ratchet

- Remove guide plate **(a)** from magneto cover sub assembly.

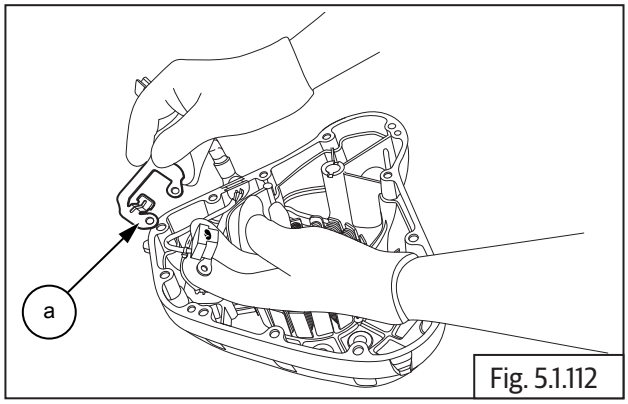

Fig. 5.1.112

- Gently release wiring grommet **(a)** from magneto cover.
- Gently remove stator assembly **(b)** from magneto cover.

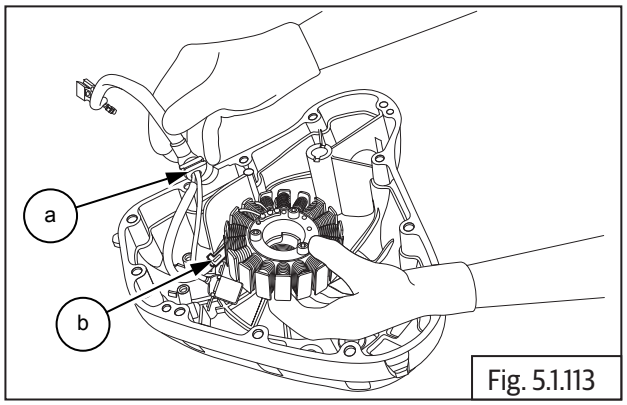

Fig. 5.1.113

5.1.35. Magneto Rotor Bolt

- In order to loosen magneto rotor bolt, it will be necessary to remove clutch cover.
- Ensure LH piston is at TDC on compression stroke.
- Insert special tool **(a)** in crankcase RH to lock the crankshaft and prevent rotation.

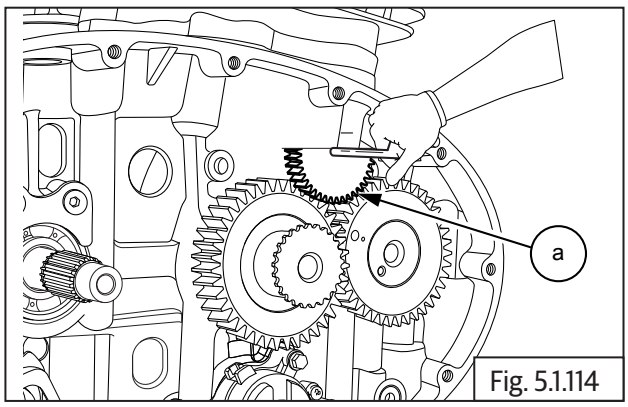

Fig. 5.1.114

SPL	Part No: ST-27533-2
	Part Name: Crank Gears Locking Tooll

- Loosen and remove Hex flange head bolt **(M12) (a)**.

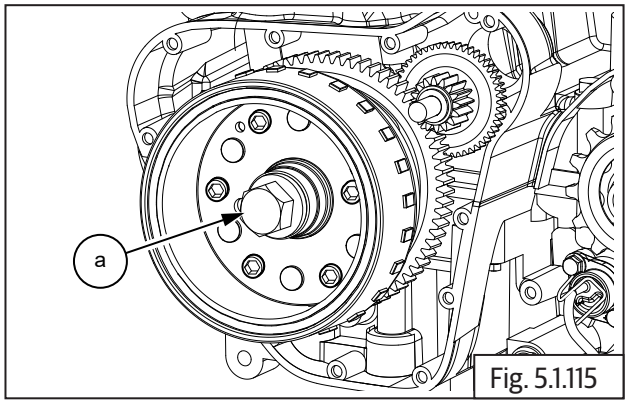

Fig. 5.1.115

	17 mm Socket with Ratchet

- Ensure center bolt of magneto rotor puller is loosened sufficiently.
- Assemble puller **(b)** on magneto rotor **(a)** and thread it in fully.
- Tighten center bolt onto puller till magneto rotor gets released from crankshaft.

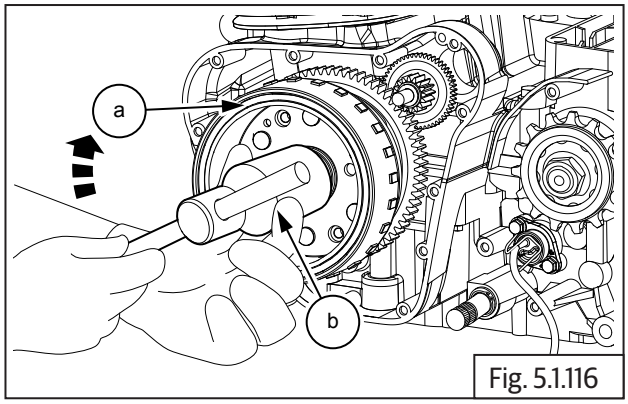

Fig. 5.1.116

SPL	Part No: ST30274/a
	Part Name: Magneto Puller Assembly

- Gently pull out magneto rotor assembly **(a)** with starter clutch.

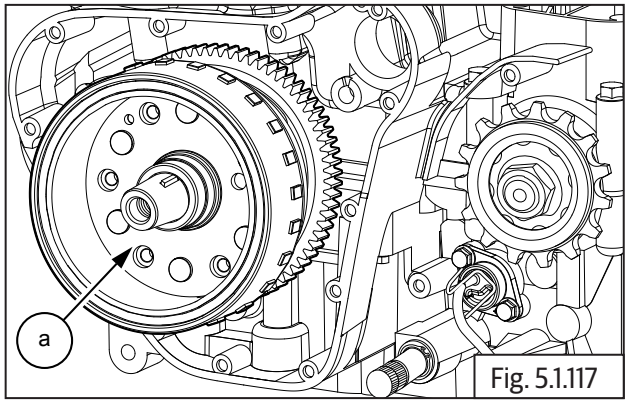

Fig. 5.1.117

- Remove woodruff key **(a)** from crankshaft.

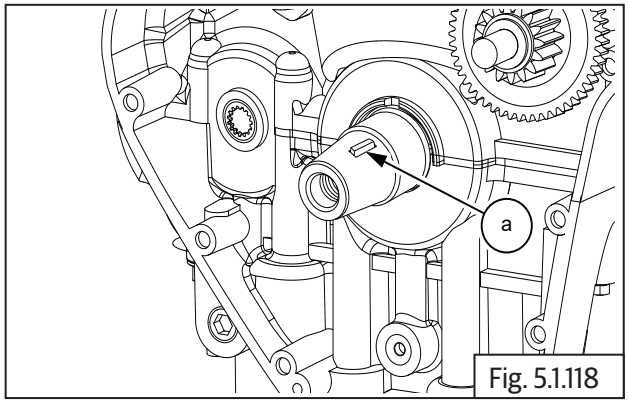

Fig. 5.1.118

5.1.36. Starter Clutch from Magneto Rotor

- Slightly loosen 6 Nos. Hex socket head screws **(M6) (a)** from inside magneto rotor. **DO NOT LOOSEN AND REMOVE FULLY**.

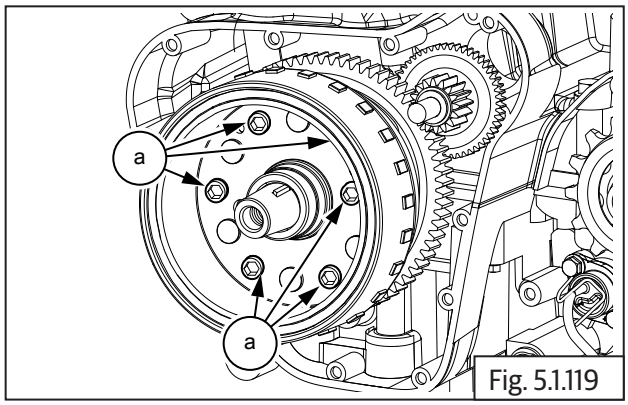

Fig. 5.1.119

	5 mm Allen socket with Ratchet

- Remove magneto rotor assembly **(a)** from carnk shaft, hold the rotor firmly, rotate gear starter clutch **(b)** anti-clockwise and pull out simultaneously to separate rotor from the gear.

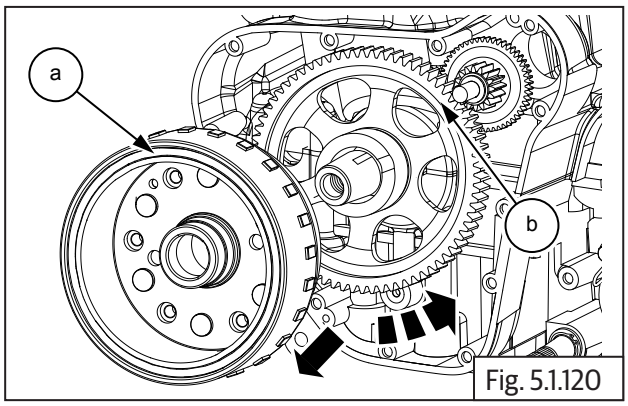

Fig. 5.1.120

- Remove starter idle gear **(a)**.

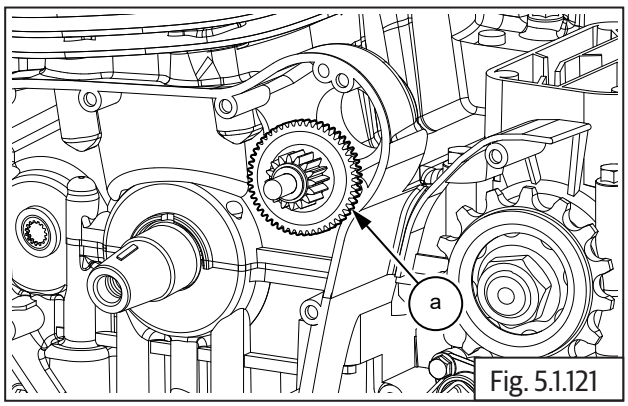

Fig. 5.1.121

- Loosen and remove 6 Nos. Hex socket head screws **(M6) (a)** from inside magneto rotor **(b)** and separate one way clutch with outer ring **(c)**.
- Remove one way clutch from outer ring.

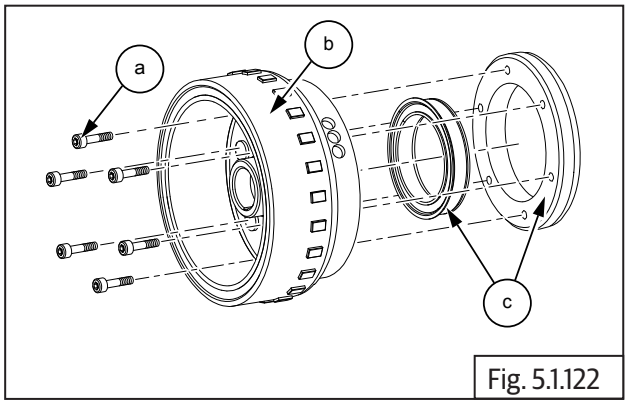

Fig. 5.1.122

	5 mm Allen socket with Ratchet

5.1.37. Cylinder Head

- Remove exhaust pipe and silencers LH and RH.
- Loosen and remove 8 Nos. Hex head long bolts **(M10) (a)** in crisscross pattern on cylinder head.

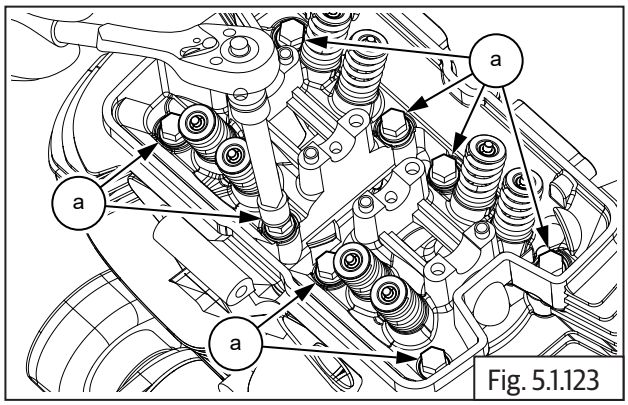

Fig. 5.1.123

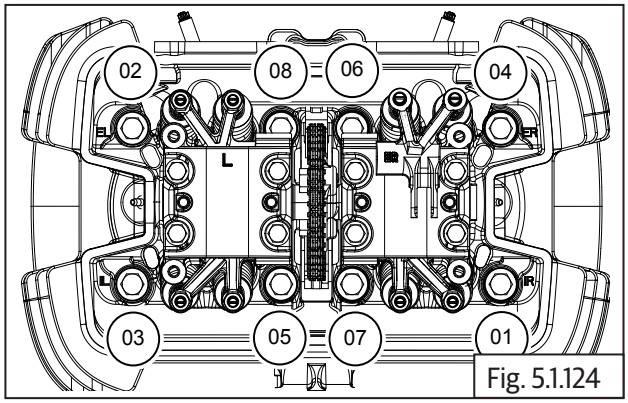

Fig. 5.1.124

	14 mm Socket with Ratchet

- Support cam chain suitably and gently remove cylinder head **(a)** from cylinder barrel **(b)**.

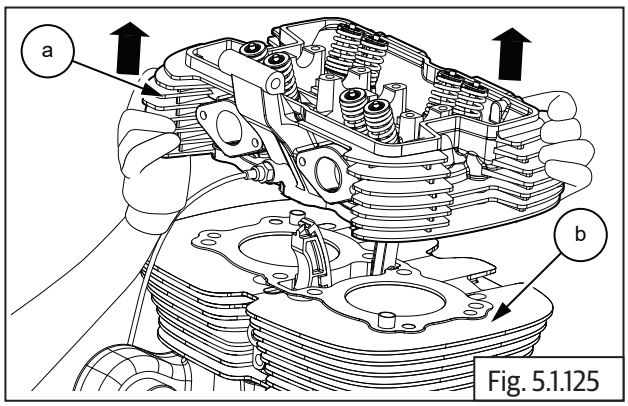

Fig. 5.1.125

- Remove the cylinder head gasket **(a)** from cylinder barrel **(b)**.

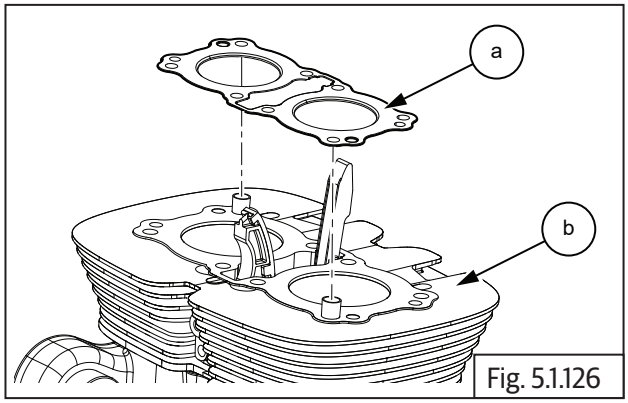

Fig. 5.1.126

5.1.38. Components from Cylinder Head

Valves and Springs

- Compress valve spring with special tool **(a).**

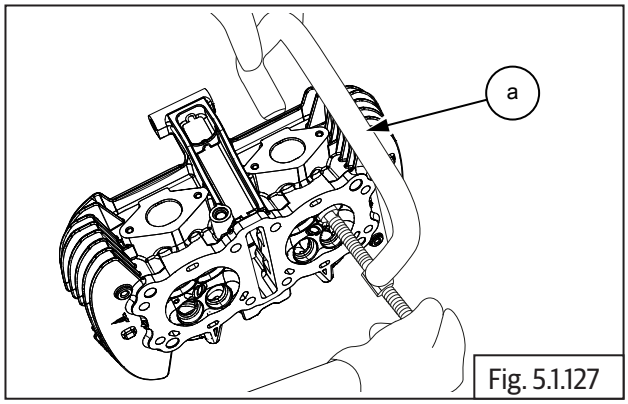

Fig. 5.1.127

SPL 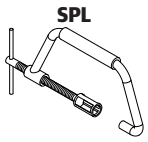	Part No: ST-27528-2
	Part Name: Valve spring compressor

- Remove the cotters **(a)** on valve stem at the top.

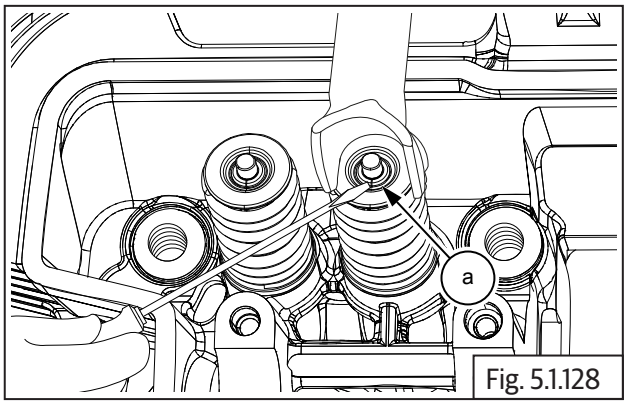

Fig. 5.1.128

SPL 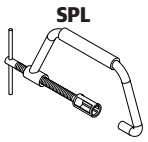	Part No: ST-27528-2
	Part Name: Valve spring compressor

- Gently loosen the screw on valve spring compressor, till the valve spring tension is completely released and remove the special tool.

⚠ CAUTION

Valve spring under high tension when compressed.

Release valve spring compressor tool slowly and with care.

- Remove the retainer, valve spring **(a)** form the top of the valve spring **(b)**.

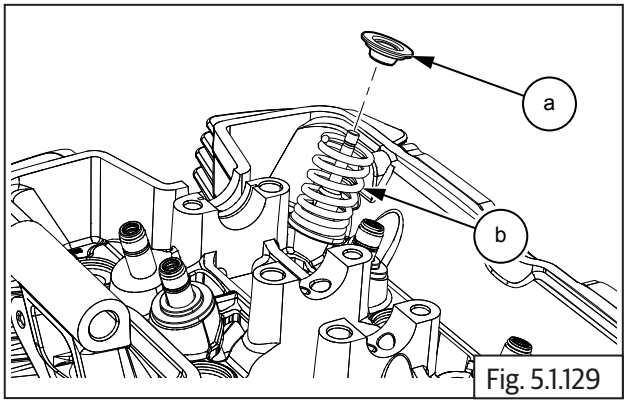

Fig. 5.1.129

- Remove valve spring **(a)** from valve stem **(b)**.

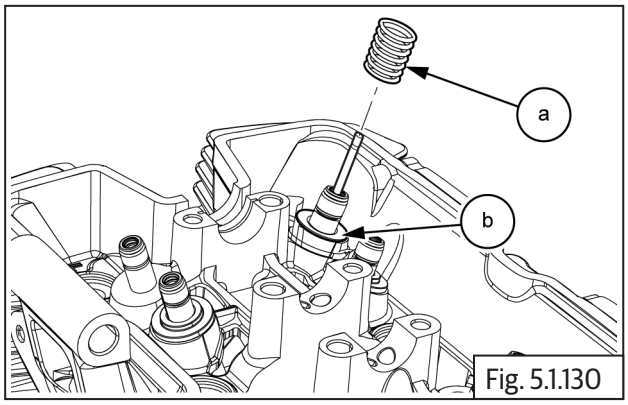

Fig. 5.1.130

- Remove valve **(a)** from cylinder head **(b)** by pulling it out from the cylinder head inside.

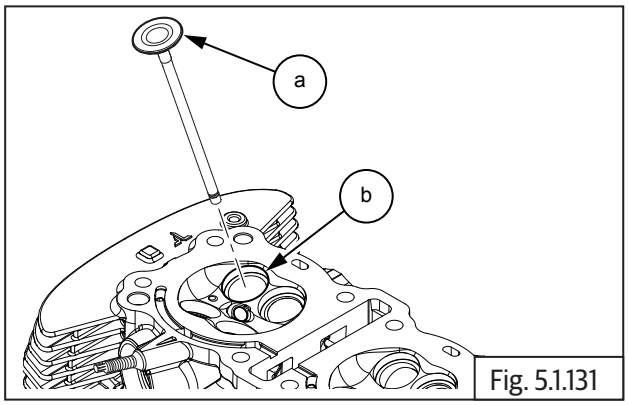

Fig. 5.1.131

- Remove valve stem seal **(a)** from valve guide **(b)**.

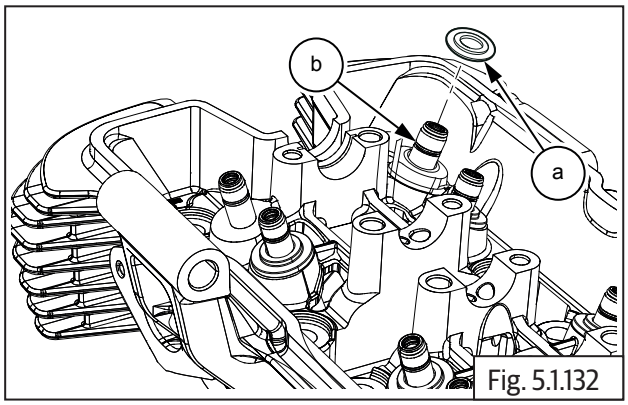

Fig. 5.1.132

- Follow the same procedure to remove the other valves from the cylinder head.

5.1.39. Floating Chain Pad

- Remove the floating chain pad **(a)** from front end of the cylinder barrel.

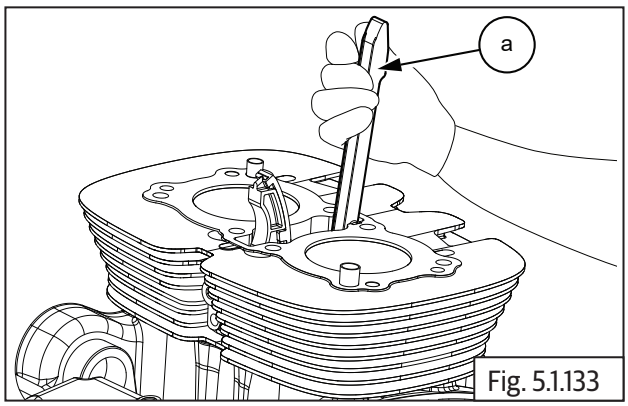

Fig. 5.1.133

5.1.40. Cylinder Barrel

- Support cam chain suitably.
- Gently remove cylinder barrel **(a)** from crankcase **(b)**.

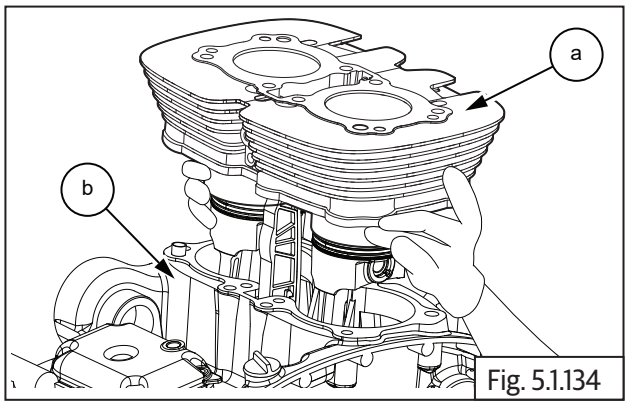

Fig. 5.1.134

5.1.41. Pistons

- Remove the circlip **(a)** from outer side of piston RH.

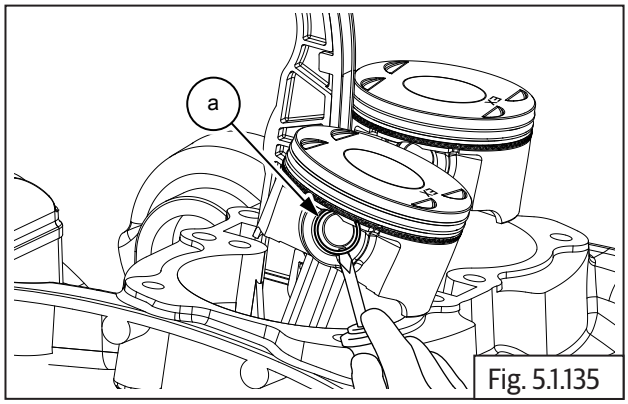

Fig. 5.1.135

	Screw driver

- Gently push out gudgeon pin **(a)** from inner side of piston RH and ensure it has completely come out of the connecting rod, to release piston RH from the connecting rod.

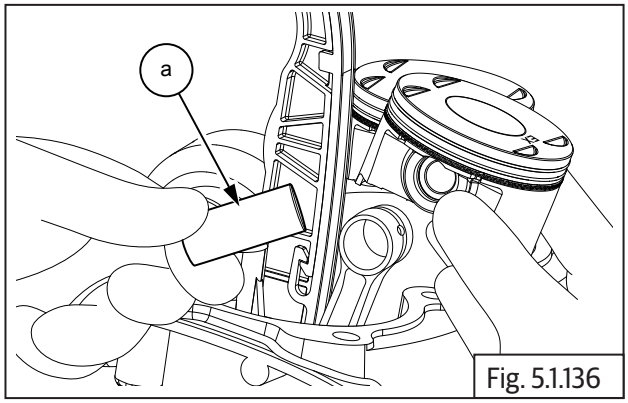

Fig. 5.1.136

- Repeat above procedure for removing piston LH.

5.1.42. Oil Pressure Switch

- Ensure engine oil is drained completely.
- Loosen and remove pressure switch **(a)** along with washers **(b)** from bottom of the crankcase RH.

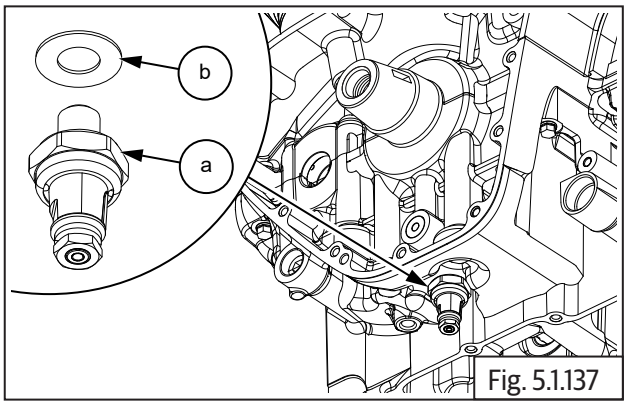

Fig. 5.1.137

	21 mm Socket with Ratchet

5.1.43. Oil Pan

- Loosen and remove the 13 Nos. Hex bolts **(M6) (a)** in crisscross pattern from sump.

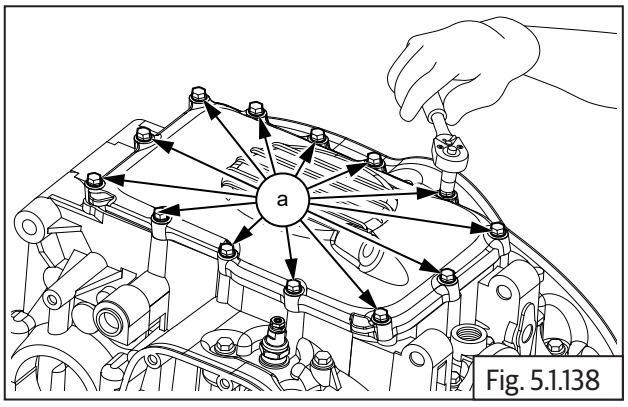

Fig. 5.1.138

	10 mm Socket with Ratchet

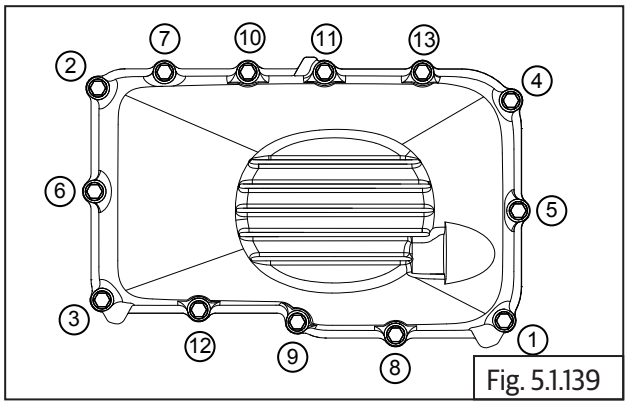

Fig. 5.1.139

- Remove sump cover **(a)** along with gasket **(b)** from bottom crankcase.

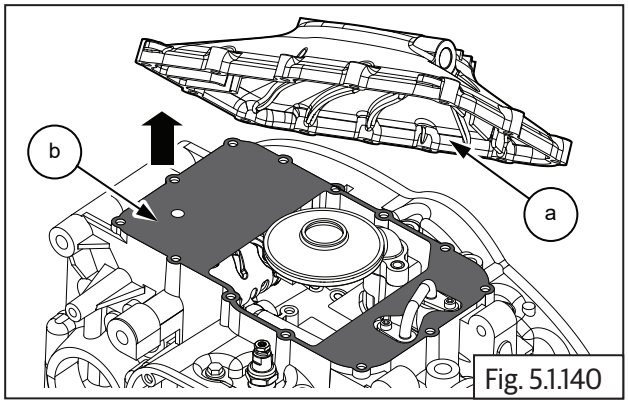

Fig. 5.1.140

5.1.44. Oil Strainer

- Loosen and remove 2 Nos. Hex flange head bolts **(M6) (a)** to remove oil strainer **(b)** along with O-ring **(c)**.

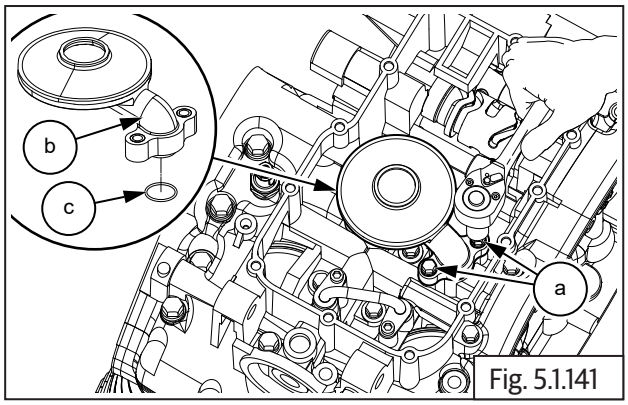

Fig. 5.1.141

	10 mm Socket with Ratchet

⚠ CAUTION

DO NOT reuse O-ring. Always use new O-ring during installation

5.1.45. Oil Bypass

- Loosen and remove Hex socket head cap screw **(M6) (a)** to remove bypass **(b)** from crankcase.
- Remove the O - rings with the bypass pipe.

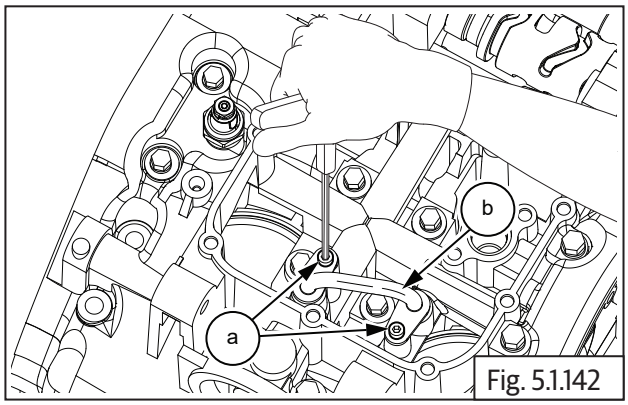

Fig. 5.1.142

	5 mm Allen key

COMPONENTS ASSEMBLY ON ENGINE

CONTENTS PAGE

5.2 Components Assembly on Engine 85

5.2.1. Oil Bypass 85
5.2.2. Oil Strainer 85
5.2.3. Oil Pan 85
5.2.4. Oil Pressure Switch 86
5.2.5. Drain Plug 86
5.2.6. Oil Filter 87
5.2.7. Piston Rings on Piston 87
5.2.8. Pistons on Connecting Rods 88
5.2.9. Cylinder Barrel Dowels on Crankcase 89
5.2.10. Cylinder Barrel Gasket on Crankcase 89
5.2.11. Piston LH in Cylinder Barrel 89
5.2.12. Piston RH in Cylinder Barrel 90
5.2.13. Cylinder Head Gasket on Cylinder Barrel 91
5.2.14. Floating Chain Pad 91
5.2.15. Components in Cylinder Head 92
5.2.16. Cylinder Head on Cylinder Barrel 93
5.2.17. Starter Clutch to Magneto Rotor 94
5.2.18. Woodruff Key on Crankshaft 95
5.2.19. Magneto Rotor on Crankshaft 95
5.2.20. Camshaft Sub Assembly 96
5.2.21. Timing Chain Tensioner 98
5.2.22. Rocker Arms in Carriers LH and RH 99
5.2.23. Rocker Carrier on Cylinder Head LH 100
5.2.24. Rocker Carrier on Cylinder Head RH 101
5.2.25. Tappet Clearance Adjustment 102
5.2.26. Cover Cylinder Head 103
5.2.27. Inlet Manifold Rubber Flanges LH & RH 104
5.2.28. Throttle Body 104
5.2.29. Air Filter Hoses On Throttle Body 105
5.2.30. Throttle Cables 105
5.2.31. Injector, TPS, MAPS, ISC Connections 105

CONTENTS PAGE

5.2.32. Throttle Body Covers on LH and RH 106
5.2.33. Spark Plugs 107
5.2.34. Spark Plug Suppressor Caps 107
5.2.35. Star Index 107
5.2.36. Star Index Stopper 108
5.2.37. Shifter Selector Shaft 110
5.2.38. Oil Pump 111
5.2.39. Clutch Assembly 112
5.2.40. Oil Level Window on Clutch Cover 115
5.2.41. Clutch Actuating Lever Assembly 116
5.2.42. Clutch Cover 117
5.2.43. Arm Clutch Actuating Lever 118
5.2.44. Clutch Cable on Clutch cover 118
5.2.45. FD Sprocket 119
5.2.46. Rear Chain to FD Sprocket 120
5.2.47. Gear Position Sensor (GPS) 121
5.2.48. Magneto Cover Sub Assembly 121
5.2.49. Magneto Cover on Crankcase 122
5.2.50. Magneto / Gear position switch wiring couplers 123
5.2.51. FD Sprocket Cover 123
5.2.52. Gear Shift Linkage 124
5.2.53. Starter Motor 124
5.2.54. Starter Motor Connections 124
5.2.55. Breather Box 125
5.2.56. Breather Hose Connections 125
5.2.57. Engine Oil Filling 126

5.2 Components Assembly on Engine

5.2.1. Oil Bypass

- Install O-rings **(a)** on both ends of the bypass pipe.
- Install oil bypass pipe **(b)** into lower crankcase oil gallery.

NOTE
• *Replace O - Rings whenever the Bypass Pipe is removed.* **DO NOT** *reuse.*

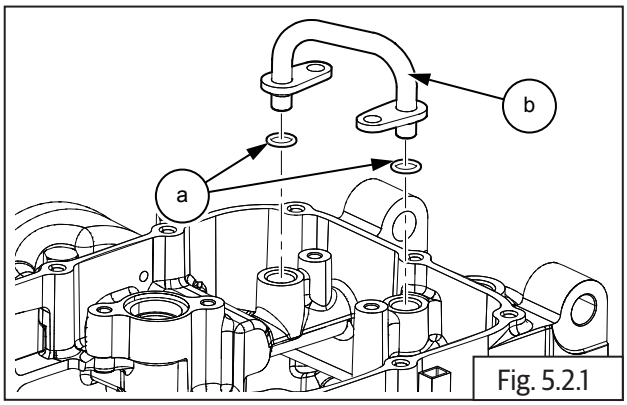

Fig. 5.2.1

- Tighten 2 Nos. Hex socket head screw **(M6) (a)** to specified torque.

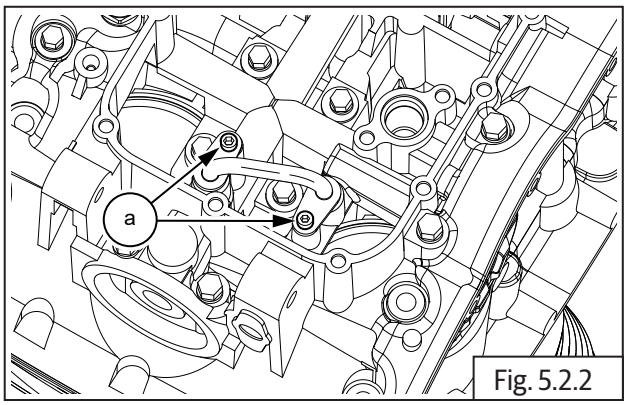

Fig. 5.2.2

	5 mm Allen socket with Ratchet
Torque	10-12 N-m/1.0-1.2 kgf-m

5.2.2. Oil Strainer

- Ensure O-ring is located on stainer.
- Install oil strainer **(a)** into lower crankcase oil gallery and tighten with 2 Nos. Hex flange head bolts **(M6) (b)** to specified torque.

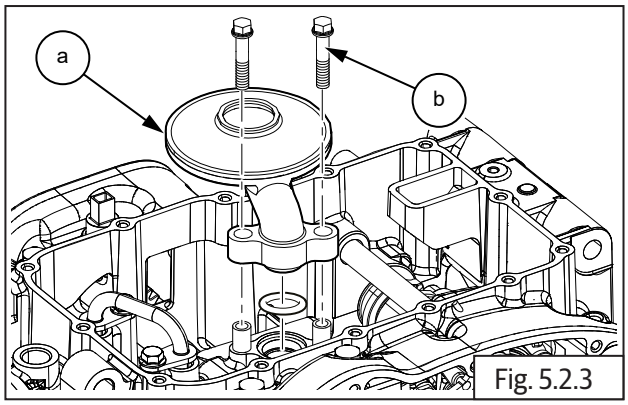

Fig. 5.2.3

	10 mm Socket with Ratchet
Torque	10-12 N-m/1.0-1.2 kgf-m

5.2.3. Oil Pan

- Locate oil pan gasket **(a)** on crankcase and assemble oil pan **(b)**.

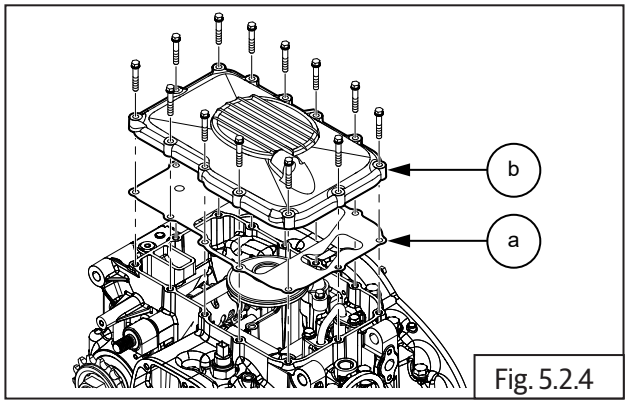

Fig. 5.2.4

- Assemble and tighten 13 Nos. Hex flange head bolts **(M6) (a)** in crisscross pattern to specified torque.

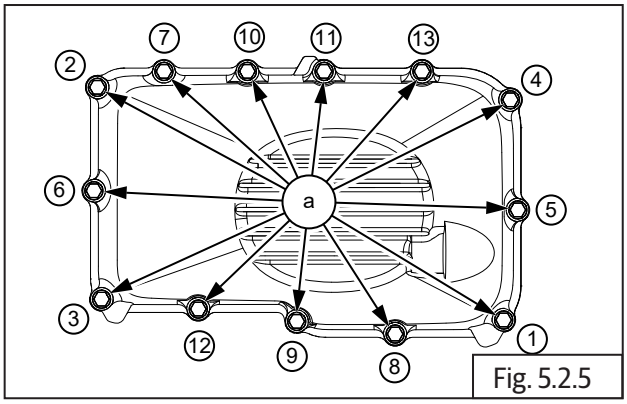

Fig. 5.2.5

	10 mm Socket with Ratchet
Torque	10-12 N-m/1.0-1.2 kgf-m

5.2.4. Oil Pressure Switch

- Assemble oil pressure switch **(a)** along with washer **(b)** on crankcase.

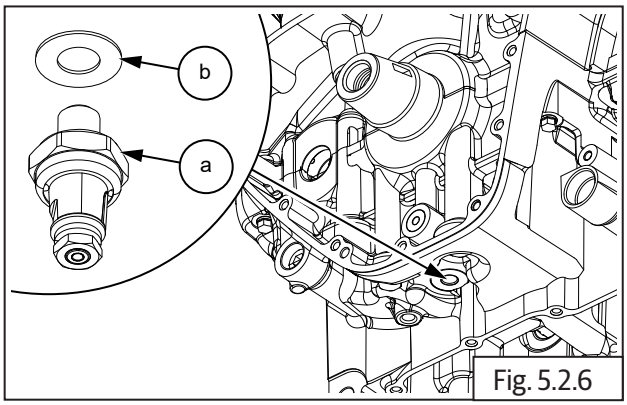

Fig. 5.2.6

- Tighten oil pressure switch **(a)** to specified torque.

	21 mm Socket with Torque wrench
Torque	8-10 N-m/0.8-1.0 kgf-m

NOTE
• *Apply Loctite 542 on the threads of Oil Pressure Switch before installing*
• *Replace washer whenever the oil pressure switch is removed.* **DO NOT** *reuse.*

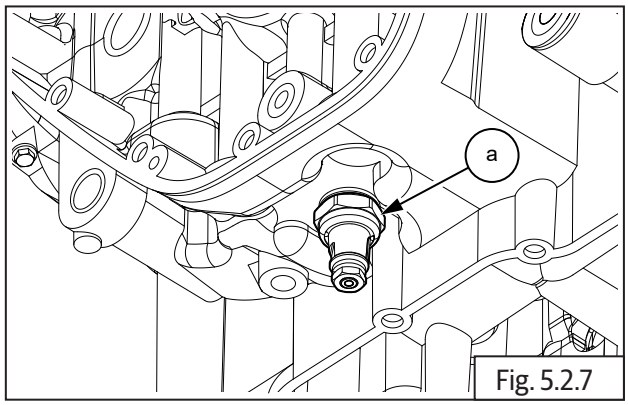

Fig. 5.2.7

	21 mm Socket with Torque wrench
Torque	10-12 N-m/1.0-1.2 kgf-m

5.2.5. Drain Plug

- Assemble magnetic drain plug **(M14) (a)** with new washer **(b)** on the front end of the oil sump at the bottom of the engine.

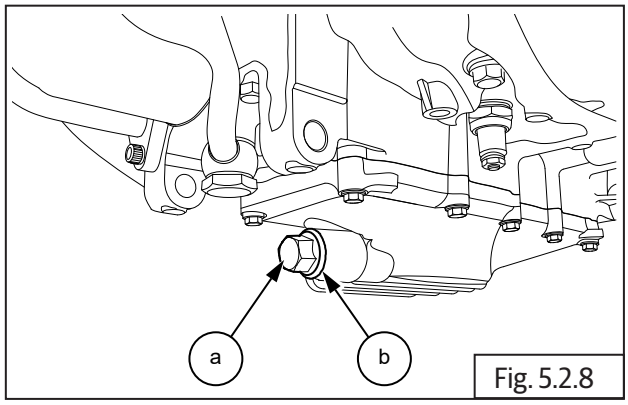

Fig. 5.2.8

- Tighten drain plug **(a)** to specified torque.

NOTE
• *Apply Loctite 542 on the threads of Drain Plug before installing*

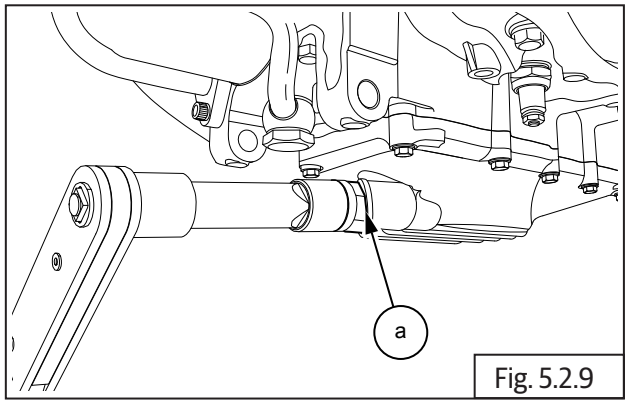

Fig. 5.2.9

	13mm Socket with Torque wrench
Torque	33-37 N-m/3.3-3.7 kgf-m

5.2.6. Oil Filter

- Ensure O-ring **(a)** is seated properly over oil filter.
- Apply thin layer of fresh engine oil over O-ring.
- Assemble the oil filter union **(d)** .

NOTE
• *Ensure the slot in oil filter is outside while assembling.*

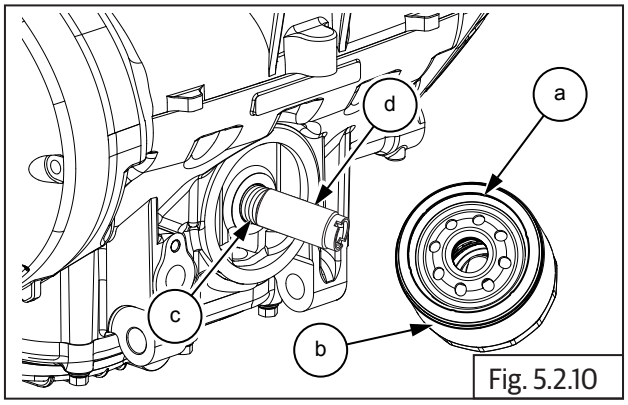

Fig. 5.2.10

SPL 	Part No: ST30293/a
	Part Name: Oil Filter Union Wrench

- Locate oil filter **(b)** on the threaded stud **(c)** in the front of the engine.
- Tighten oil filter **(a)** using special tool **(b)** to specified torque.

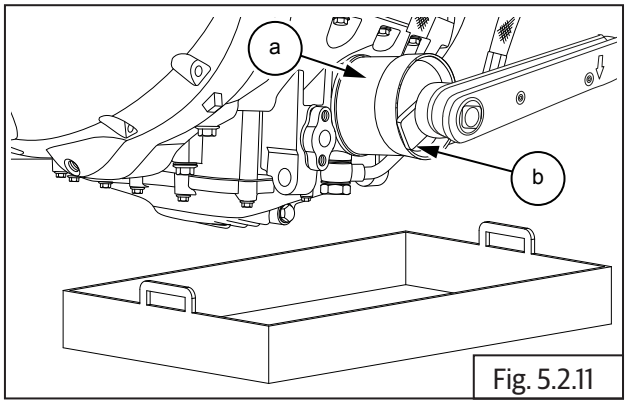

Fig. 5.2.11

SPL 	Part No: ST30294/a
	Part Name: Oil Filter wrench with Torque wrench
Torque	15-20 N-m/1.5-2.0 kgf-m (or) 360° Rotation

5.2.7. Piston Rings on Piston

NOTE
• *Rings should be assembled with proper orientation (top marking should be always towards 1st ring end gap should be 45° before "EX" mark on piston crown).*
• *Middle 2nd ring end gap should be 180° from 1st ring end gap.*
• *Oil ring 3rd top rail end gap should be 180° from 2nd ring end gap (45° before "EX" on piston crown).*
• *Oil ring spacer end gap should be 45° before 3rd ring top rail end gap (90° before "EX" on piston crown).*
• *Oil ring (3rd) bottom rail end gap should be 180° from 3rd ring top rail end gap.*
• *One of the circlip should be assembled on the inner side of piston.*

Piston Rings

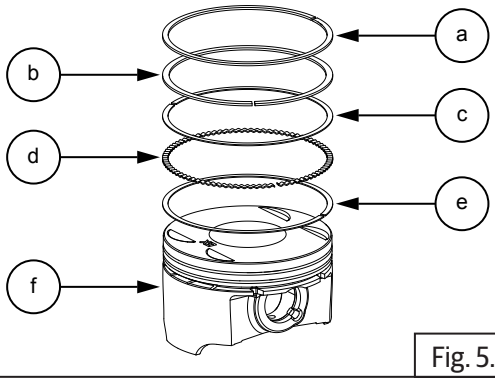

Fig. 5.2.12

a	Top ring
b	Second ring
c	Oil ring top rail
d	Oil ring spacer
e	Oil ring bottom rail
f	Piston

Orientation Pattern

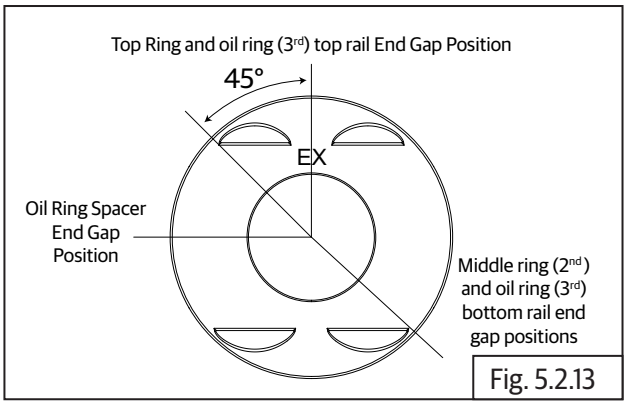

Fig. 5.2.13

- Top ring (1st) and oil ring (3rd) top rail end gap positions.

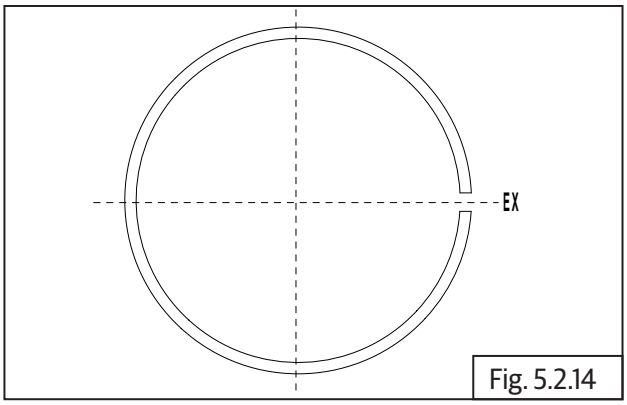

Fig. 5.2.14

- Middle (2nd) ring and oil ring (3rd) bottom rail end gap positions.

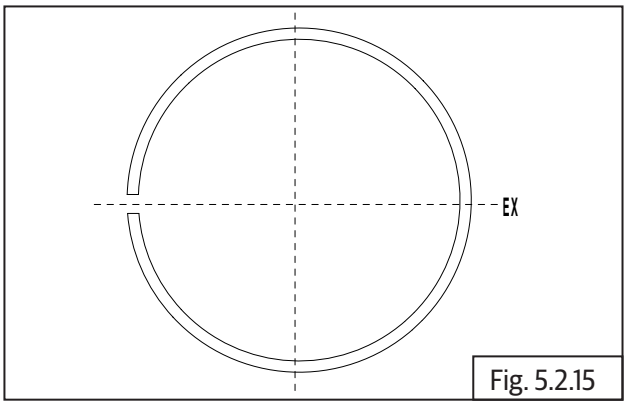

Fig. 5.2.15

- Oil ring spacer end gap position.

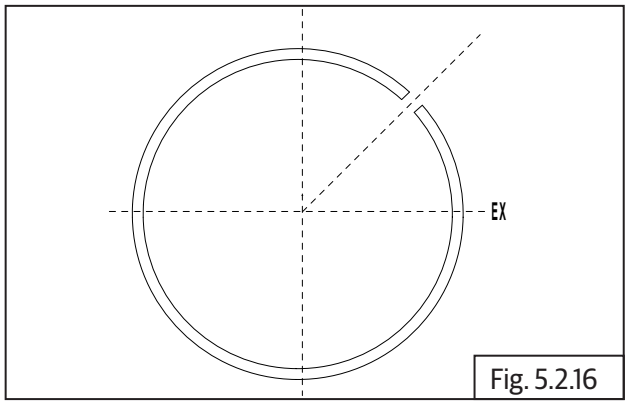

Fig. 5.2.16

5.2.8. Pistons on Connecting Rods

- Ensure circlip is assembled on the inner side of the piston LH.
- Ensure piston rings are assembled correctly on the piston.
- Locate piston LH on the connecting rod LH with the marking "EX" on the piston crown is towards the front.
- Ensure gudgeon pin mounting holes on piston and connecting rod are aligned and insert gudgeon pin **(a)** into piston from the outside, till it stops against the circlip on the inner side of the piston.

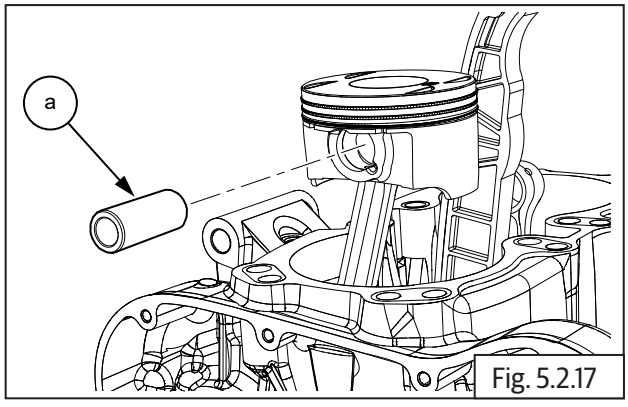

Fig. 5.2.17

- Locate the other circlip **(a)** in the groove in piston and ensure it is correctly and properly seated inside the groove.

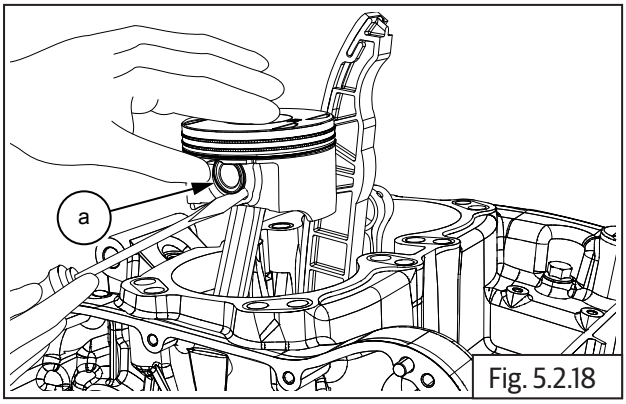

Fig. 5.2.18

	Small pointed chisel

- Repeat above procedure to assemble piston RH on the connecting rod RH.

5.2.9. Cylinder Barrel Dowels on Crankcase

- Install 2 Nos. dowel pins **(a)** and **(b)** on upper crankcase.

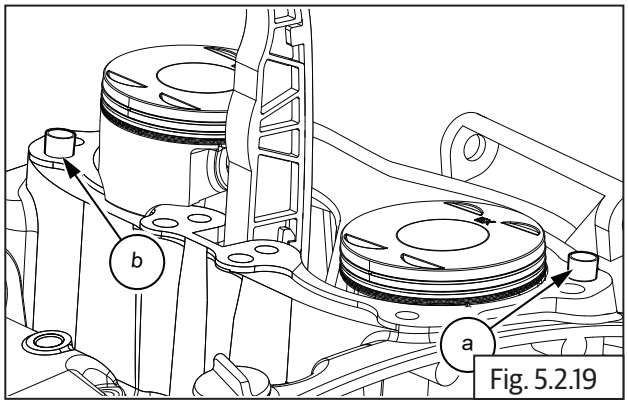

Fig. 5.2.19

5.2.10. Cylinder Barrel Gasket on Crankcase

- Ensure the gasket seating area in crankcase is clean.
- Ensure cam chain is routed through a new cylinder base gasket **(a)** and locate the gasket on crankcase **(b)**.
- Ensure proper seating of the gasket on the dowels on the crankcase.

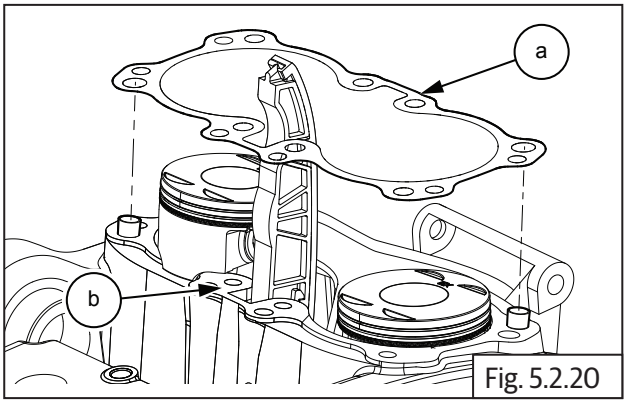

Fig. 5.2.20

5.2.11. Piston LH in Cylinder Barrel

- Ensure piston LH is at its top most position by rotating crankshaft clockwise. Locate piston ring compressor on piston LH.
- Compress piston rings with special tool **(a)**.

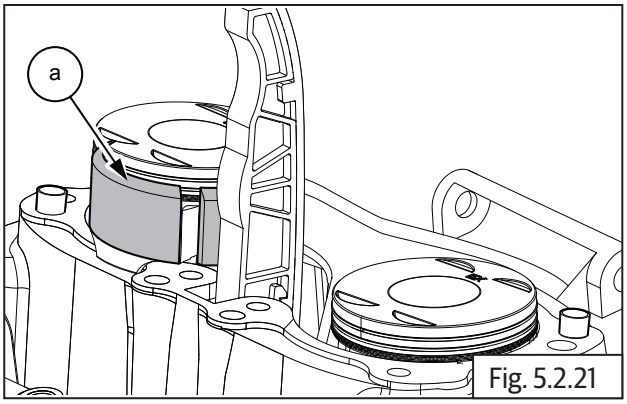

Fig. 5.2.21

SPL	Part No: ST30296/a
	Part Name: Piston ring compressor

- Position and hold cylinder barrel above crankcase, route cam chain through cylinder barrel bottom and ensure it is supported firmly and suitably at the top.

- Ensure cylinder barrel LH is well lubricated, LH piston is held firmly and straight.
- Gently lower cylinder barrel **(a)** over the piston ring compressor tool on piston LH, till the piston is halfway into the cylinder barrel.

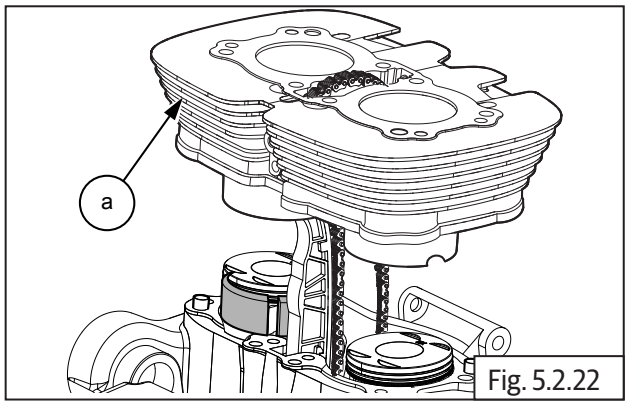

Fig. 5.2.22

- Hold cylinder barrel firmly in suspended position and remove the piston ring compressor special tool **(a)** from piston LH.

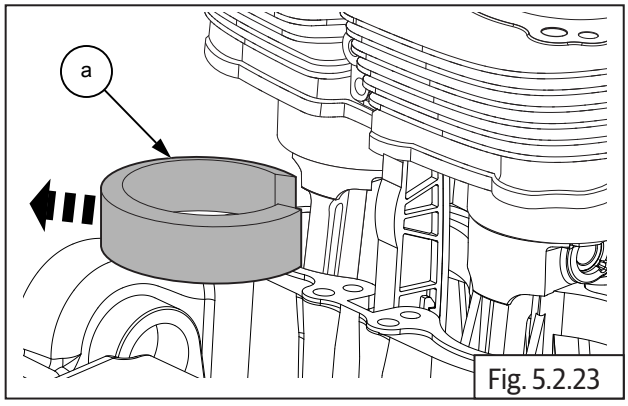

Fig. 5.2.23

SPL	Part No: ST30296/a
	Part Name: Piston ring compressor

5.2.12. Piston RH in Cylinder Barrel

- Ensure cylinder barrel RH is well lubricated, RH piston is at its top most position, held firmly and straight.
- Locate piston ring compressor tool **(a)** over piston RH.

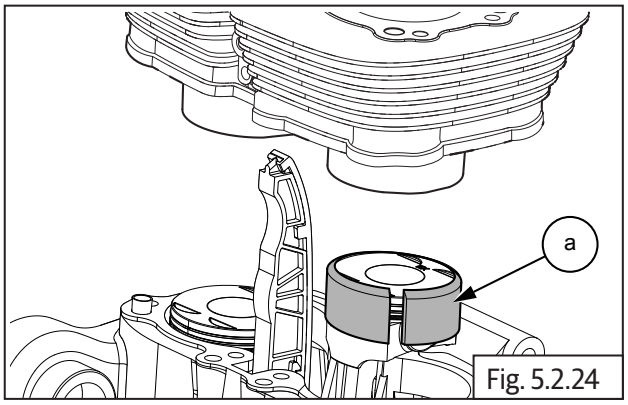

Fig. 5.2.24

SPL	Part No: ST30296/a
	Part Name: Piston ring compressor

- Gently lower cylinder barrel **(a)** till piston RH is halfway into the cylinder barrel.

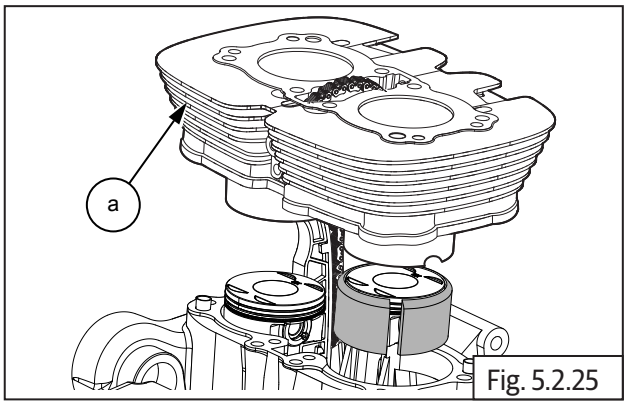

Fig. 5.2.25

- Hold cylinder barrel firmly in suspended position and remove the piston ring compressor special tool **(a)** from piston RH.

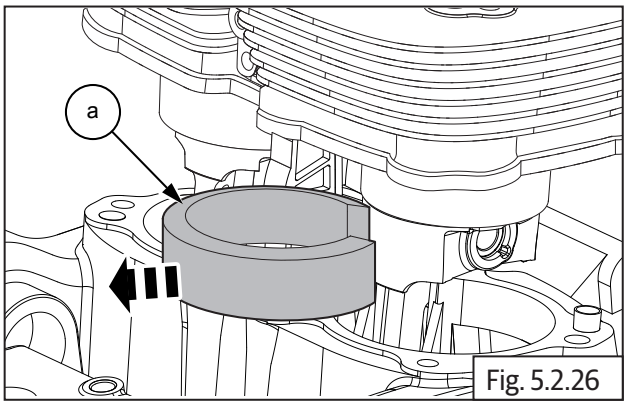

Fig. 5.2.26

SPL 	Part No: ST30296/a
	Part Name: Piston ring compressor

- Gently lower cylinder barrel further, till it is firmly seated on the crankcase.
- Locate 2 Nos. dowel pins **(a)** on cylinder barrel and ensure they are seated properly.

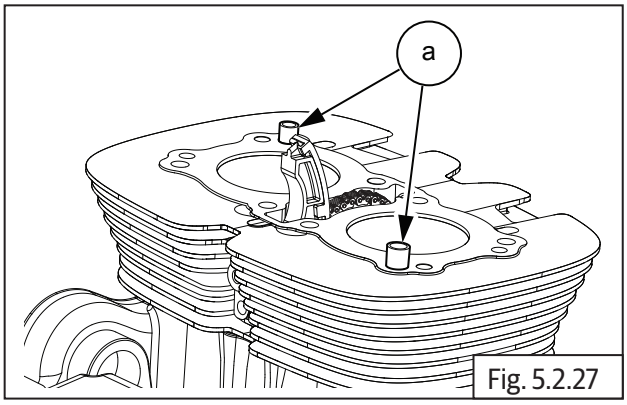

Fig. 5.2.27

5.2.13. Cylinder Head Gasket on Cylinder Barrel

- Ensure the gasket seating surface on cylinder barrel is clean.
- Ensure cam chain is routed through a new cylinder head gasket.
- Locate head gasket **(a)** on cylinder barrel and ensure it is properly seated on the dowel pins and cylinder barrel.

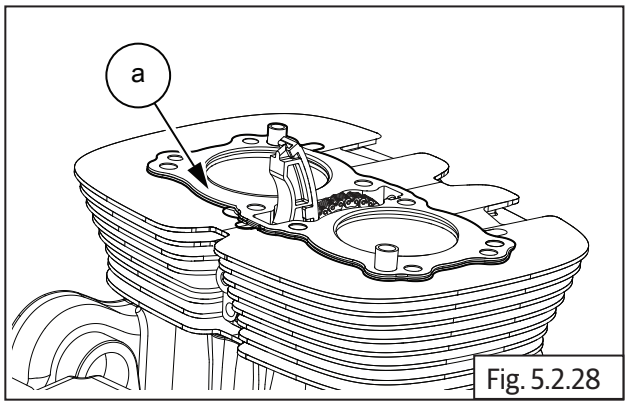

Fig. 5.2.28

5.2.14. Floating Chain Pad

- Hold timing chain **(a)** suitably and insert chain pad **(b)** into cylinder barrel with the rubber track facing inside.

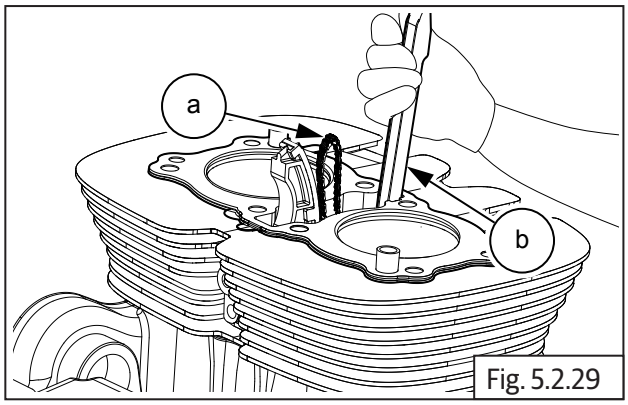

Fig. 5.2.29

⚠ CAUTION

Ensure floating chain pad seating correctly in the crankcase and free radial movement.

5.2.15. Components in Cylinder Head

Valves and Springs

- Install 8 valve stem seals **(b)** on the 8 valve guides **(a)**.

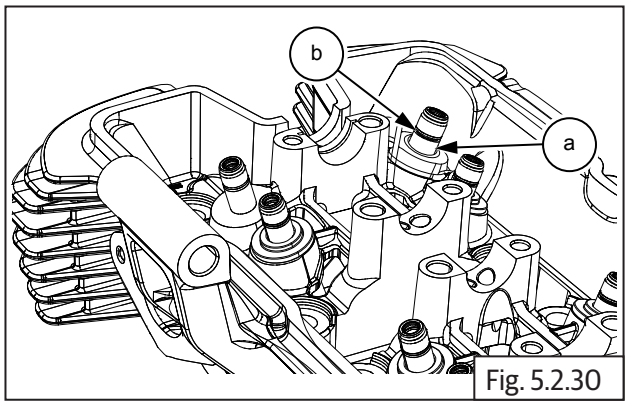

Fig. 5.2.30

- Lubricate and insert the valves **(a)** into the valve guides inside cylinder head **(b)**.

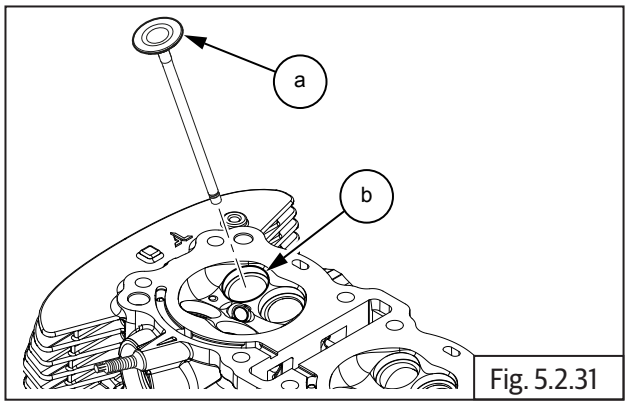

Fig. 5.2.31

- Support the valve inside cylinder head and assemble valve spring seat **(c).** Place the spring **(a)** over valve stem **(b)** in the outer area of the cylinder head.

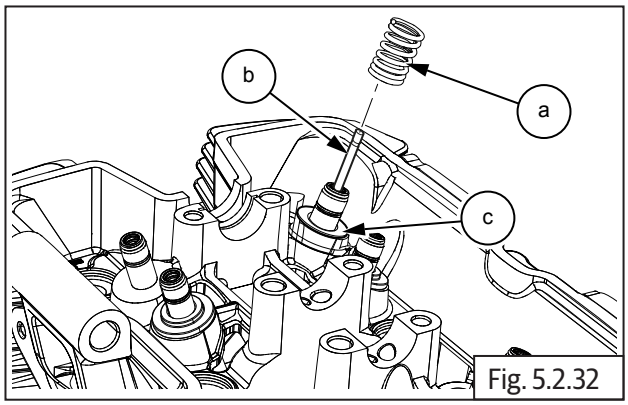

Fig. 5.2.32

- Insert Retainer, Valve Spring - 4v **(a)** above valve spring **(b)**.

⚠ CAUTION

Ensure the marked position in spring (a) is facing downwards while assembling.

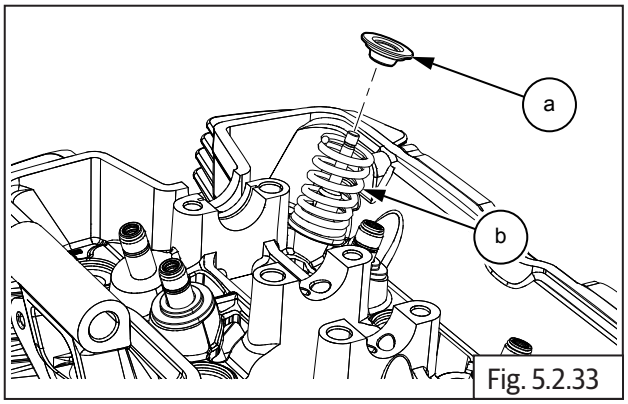

Fig. 5.2.33

- Locate valve spring compressor special tool on the valve such that the threaded screw end of the tool is seated centrally on the valve inside the cylinder head and the other end is seated on the valve spring retainer on the outer side of the cylinder head.
- Compress valve spring with special tool **(a)** by "hand tightening" the threaded screw of the special tool gently, till it locks against the valve**.**

⚠ CAUTION

DO NOT overtighten the special tool as it will damage both the valve seating surface and the special tool.

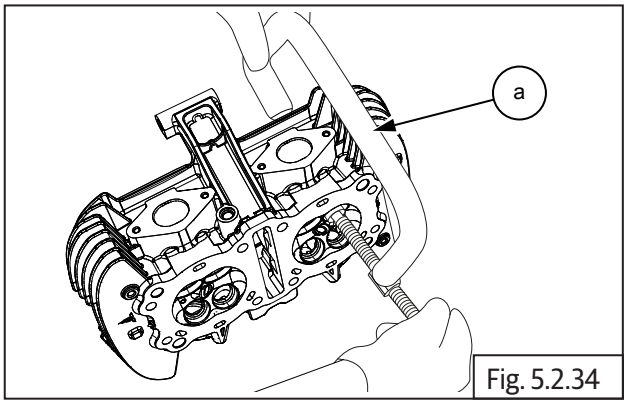

Fig. 5.2.34

SPL 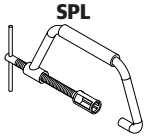	Part No: ST-27528-2
	Part Name: Valve spring compressor

- Locate two split cotters **(a)** on the retainer with their tapered end facing inside and the flat edges seated against the valve stem top portion.

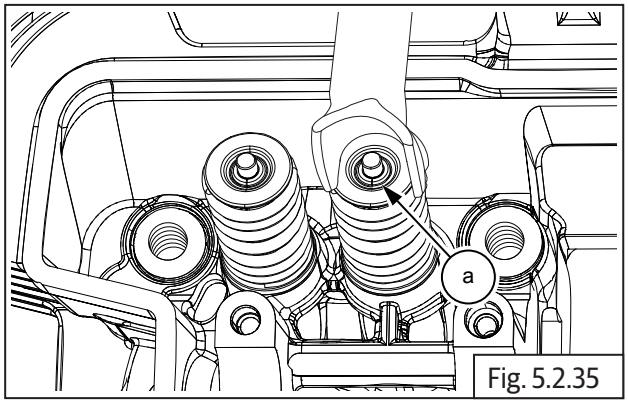

Fig. 5.2.35

SPL	Part No: ST-27528-2
	Part Name: Valve spring compressor

- Gently and slowly release valve spring compressor tool by unscrewing the threaded shaft, duly ensuring the valve cotters are locked in place on the valve stem and the tapered surfaces of the cotters are inside the valve spring retainer.
- Remove valve spring compressor special tool **(a)** from the valve.

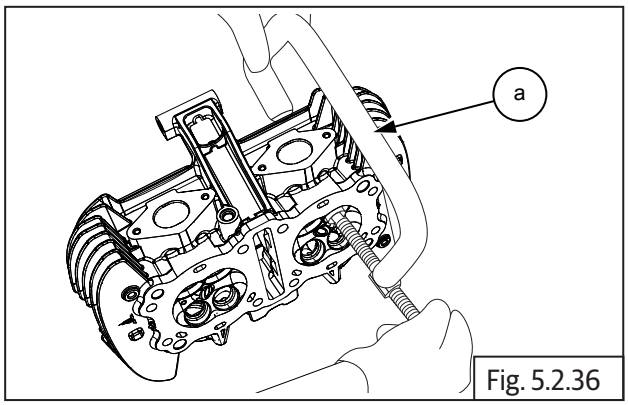

Fig. 5.2.36

- Repeat the above process to install the other seven valves, springs, retainers and cotters on the cylinder head.

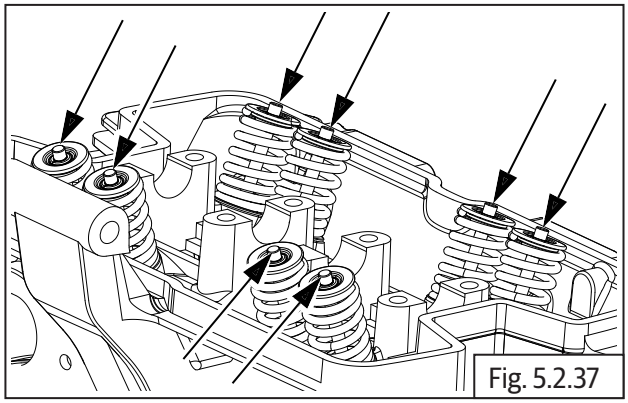
Fig. 5.2.37

5.2.16. Cylinder Head on Cylinder Barrel

Cylinder Head Assembly on Cylinder Barrel

- Position cylinder head over the barrel such that the exhaust ports are facing towards the front and inlet ports are towards the rear of the engine.
- Ensure the 2 dowels **(a)** and cylinder head gasket are located on the cylinder barrel.
- Ensure the cam chain pads are positioned correctly and route the cam chain from the lower side of the cylinder head to the top.
- Support cam chain suitably to prevent it from falling into cylinder head.

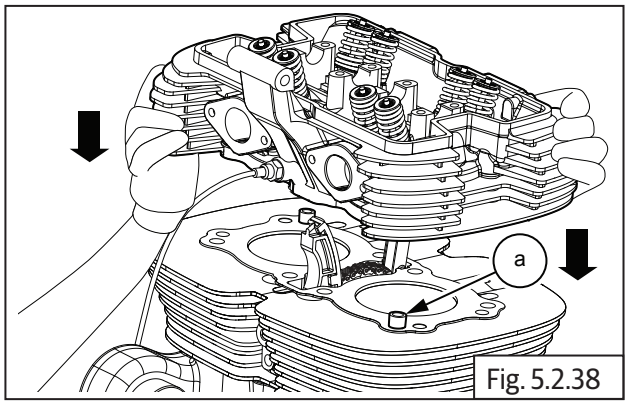

Fig. 5.2.38

⚠ CAUTION

Cylinders bolts and washers should be used one time only. DO NOT reuse.

- Locate new 8 Nos. Hex flange head bolts **(M10) (a)** along with washers on the cylinder head.

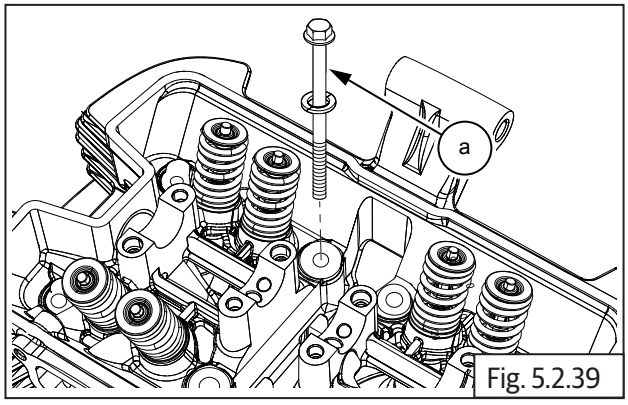

Fig. 5.2.39

	12 mm Socket with Ratchet

- Tighten the cylinder head bolts in a crisscross pattern to the initial 1st torque values FIRST and then to the 2nd torque values as specified below.

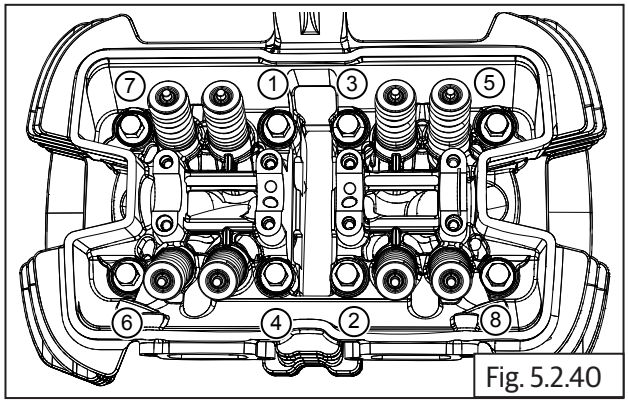

Fig. 5.2.40

- Finally tighten each of the cylinder head bolts using an angular torque wrench, to the specified angular torque value given below and in the same crisscross pattern detailed above.

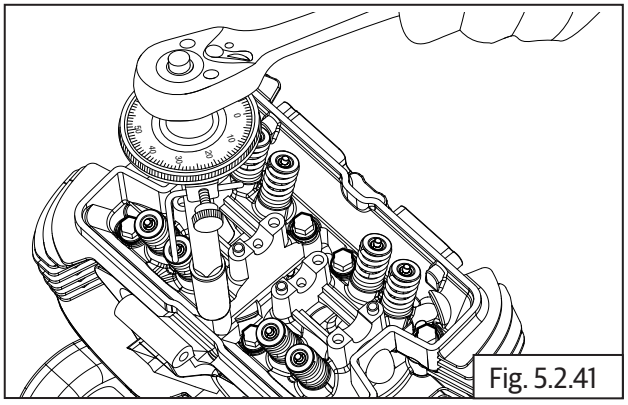
Fig. 5.2.41

	14 mm Socket with Angle wrench
1st Torque	15 N-m/1.5 kgf-m
2nd Torque	35 N-m/3.5 kgf-m
Angular Torque	150° (deg)

⚠ CAUTION

Torque and angle should be as specified. Do not over-torque as it will damage the bolts.

5.2.17. Starter Clutch to Magneto Rotor

- Lubricate one-way clutch **(d)** and assemble into outer ring **(c)** with the collar seating in the groove in the outer ring.
- Position outer ring on magneto rotor such that the collar of the starter clutch is facing magneto rotor.
- Ensure mounting holes are aligned, insert 6 Nos. Hex socket head screws **(M6) (a)** into magneto rotor **(b)** and tighten outer ring **(c)** to rotor to specified torque.

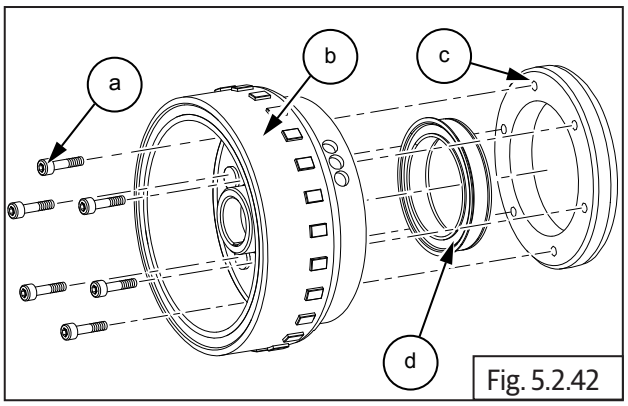

Fig. 5.2.42

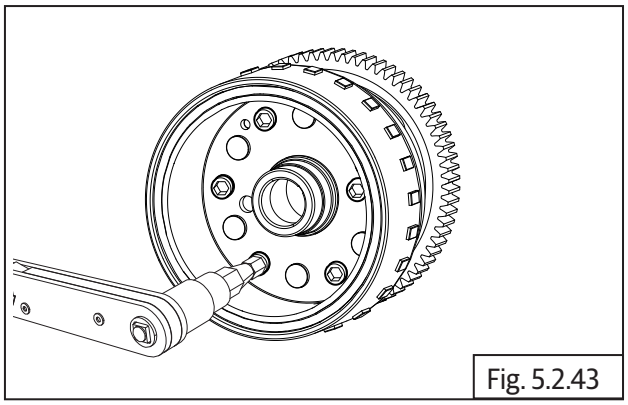

Fig. 5.2.43

	5 mm Allen socket with Torque wrench
Torque	10-12 N-m/1.0-1.2 kgf-m

NOTE
• *Apply Loctite 243 on the threads of Magneto Rotor bolts* **(a)** *before installing*

5.2.18. Woodruff Key on Crankshaft

- Assemble woodruff key **(a)** on crankshaft and ensure it is facing upwards by rotating crankshaft.

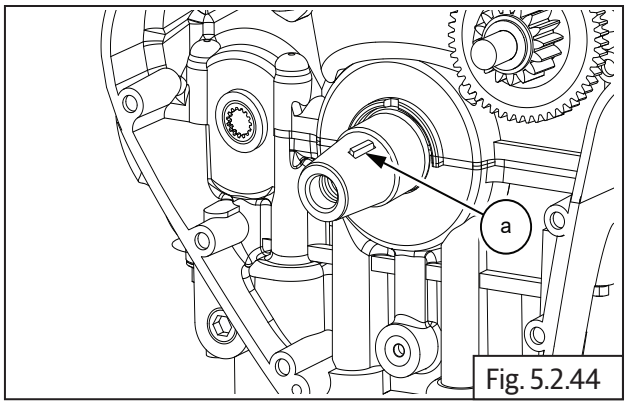

Fig. 5.2.44

5.2.19. Magneto Rotor on Crankshaft

- Position gear starter clutch with the collar facing outside.
- Insert gear starter clutch **(a)** into magneto rotor **(b)** and rotate anti-clockwise to lock the gear starter clutch into magneto rotor.

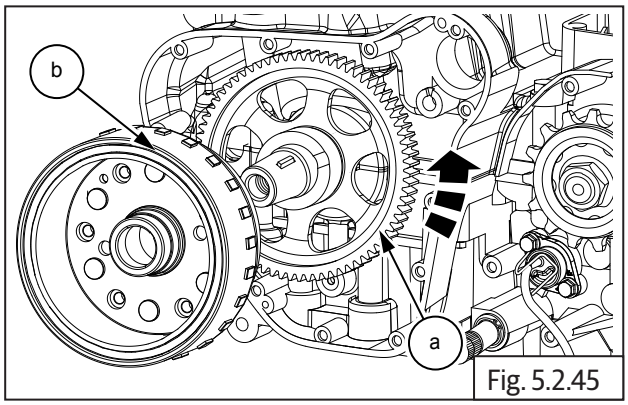

Fig. 5.2.45

- Locate magneto rotor **(a)** on crankshaft duly ensuring the slot in the rotor is positioned correctly on woodruff key.

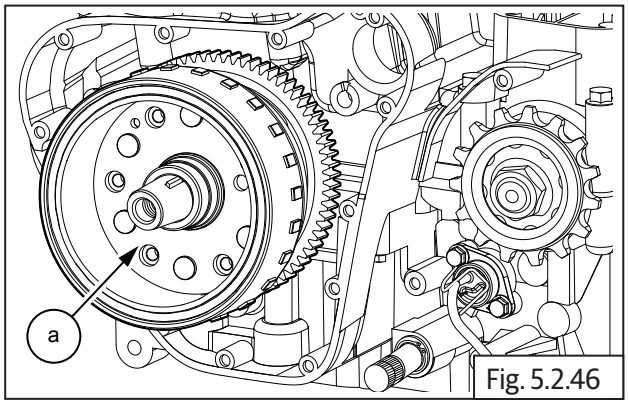

Fig. 5.2.46

- Position idle gear **(a)** against crankcase with smaller gear facing outside and insert idle gear spindle into boss in crankcase.

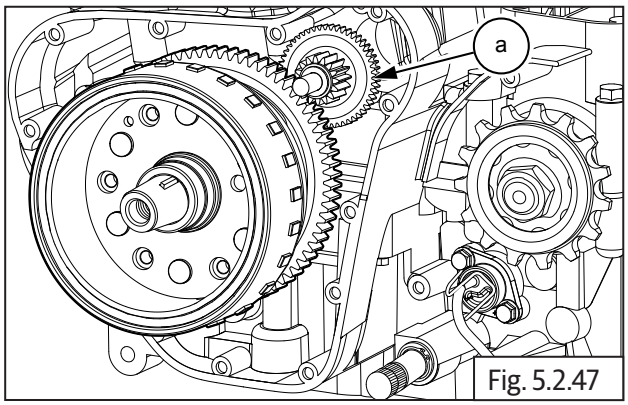

Fig. 5.2.47

- Locate and assemble Hex flange bolt **(M12) (a)** with washer on magneto rotor and tighten bolt just sufficiently.

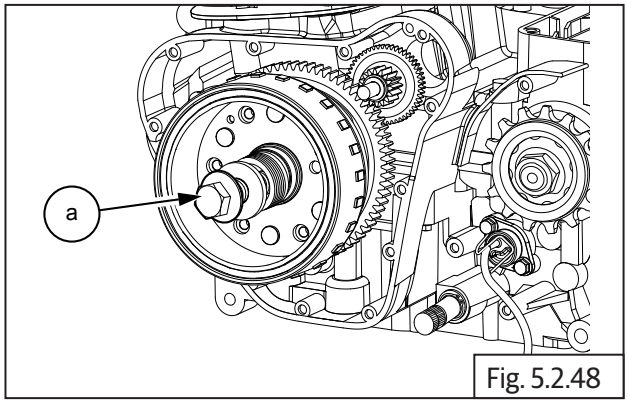

Fig. 5.2.48

- In order to tighten magneto rotor bolt, place special tool **(a)** in crankcase RH between the gears to lock the crankshaft and prevent rotation.
- Ensure LH piston is at TDC on compression stroke, before locating special tool inside crankcase RH.

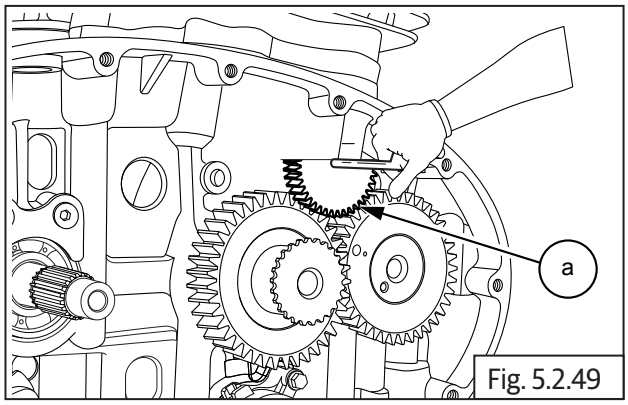

Fig. 5.2.49

SPL 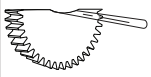	Part No: ST-27533-2
	Part Name: Crank Gears Locking Tool
Torque	153-157 N-m/15.3-15.7 kgf-m

	17 mm Socket with Ratchet and Torque wrench

- Remove special tool from crankcase RH side after tightening magneto rotor bolt.

5.2.20. Camshaft Sub Assembly

- Hold the timing chain in stretched condition and gently rotate crankshaft clockwise to bring LH piston to TDC.

NOTE
• *Insert special tool in crankcase RH to lock the crankshaft from rotating.*

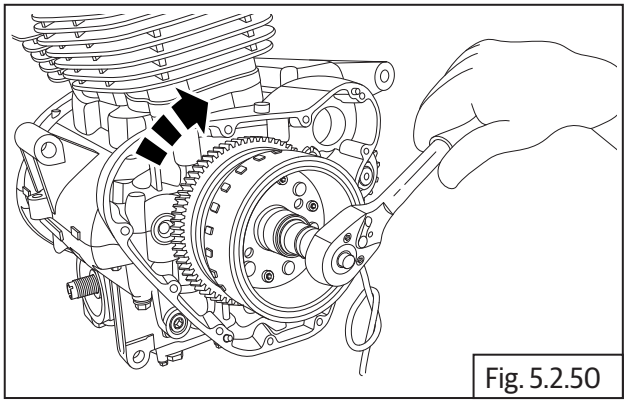
Fig. 5.2.50

	17 mm Socket with Ratchet

⚠ **CAUTION**
DO NOT rotate crankshaft anti-clockwise.

- Hold sprocket in position with one of the slotted holes facing on top.

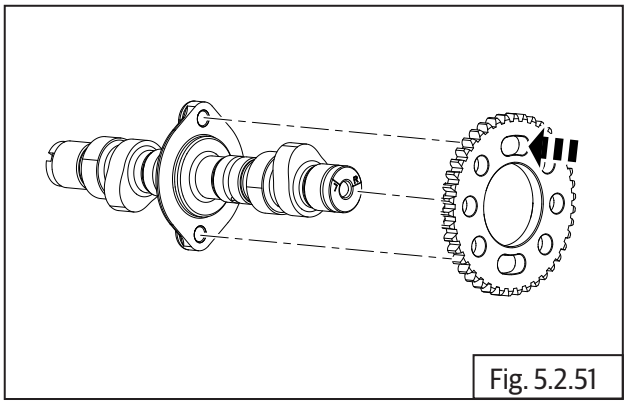
Fig. 5.2.51

- Assemble cam chain **(a)** on sprocket and locate camshaft **(b)** into sprocket from the RH side.
- Locate and install C washer **(c)** on the cylinder head.

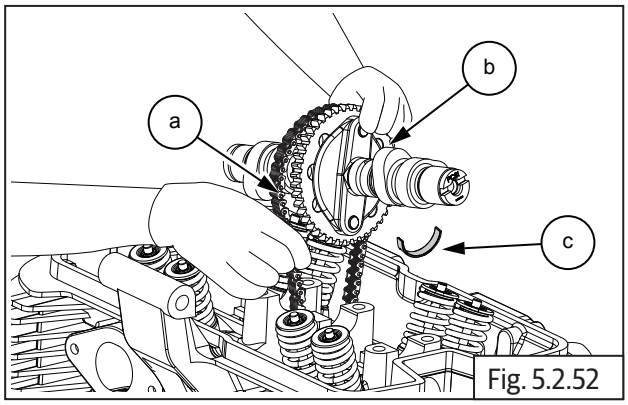

Fig. 5.2.52

- Ensure reference mark "L" in the camshaft is aligned to the cylinder head on LH side.

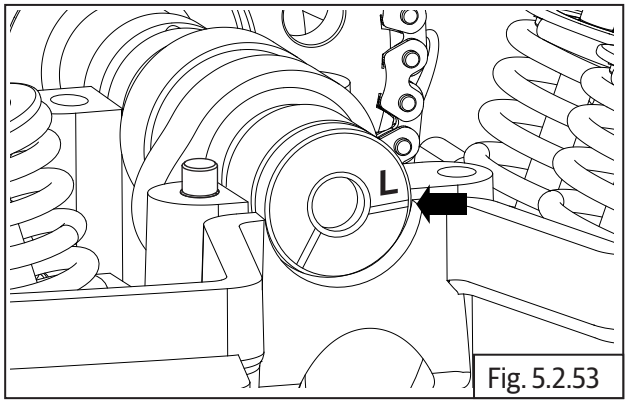

Fig. 5.2.53

- Locate timing chain sprocket on camshaft with its mounting slot centralized to the threads in the camshaft.
- Locate and tighten Hex head bolt **(M8) (a)** sufficiently on timing chain sprocket. **DO NOT TIGHTEN FULLY.**

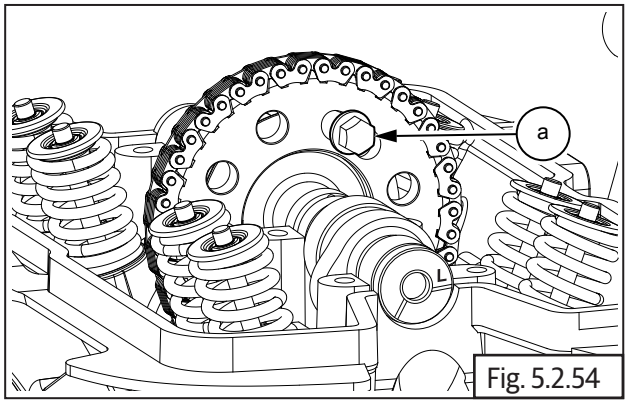

Fig. 5.2.54

- Remove the special tool from the camshaft on RH side.
- Rotate magneto **(a)** till another slotted hole on cam chain sprocket is at top most position. Ensure reference mark "R" aligned to the cylinder head.

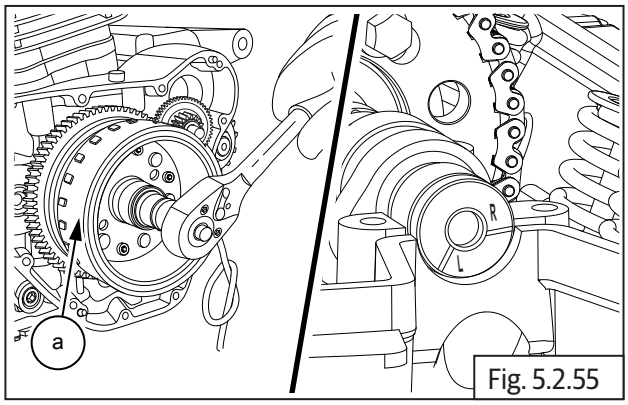

Fig. 5.2.55

	17 mm Socket with Ratchet

- Locate the other Hex head bolt **(M8) (a)** in the slotted hole on timing chain sprocket and tighten to specified torque.

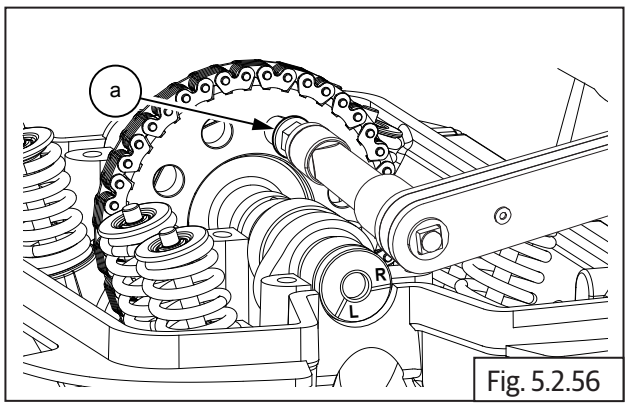

Fig. 5.2.56

	12 mm Socket with Torque wrench
Torque	33-35 N-m/3.3-3.5 kgf-m

- Remove the special tool from cylinder head on RH side.
- Rotate the magneto **(a)** clockwise till the first bolt is visible at top most position on cam chain sprocket.

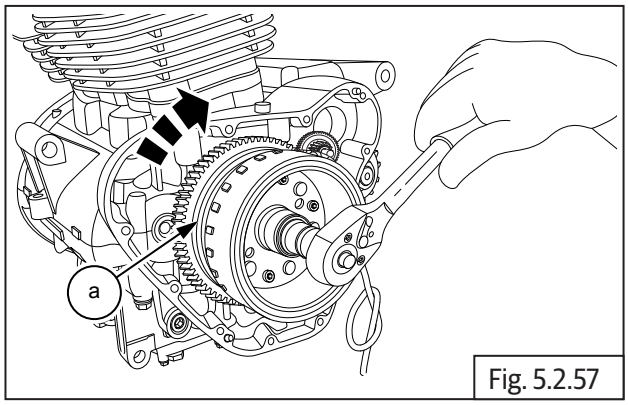

Fig. 5.2.57

	17 mm Socket with Ratchet

- Ensure reference mark "L" in the camshaft is aligned to the cylinder head on LH side.

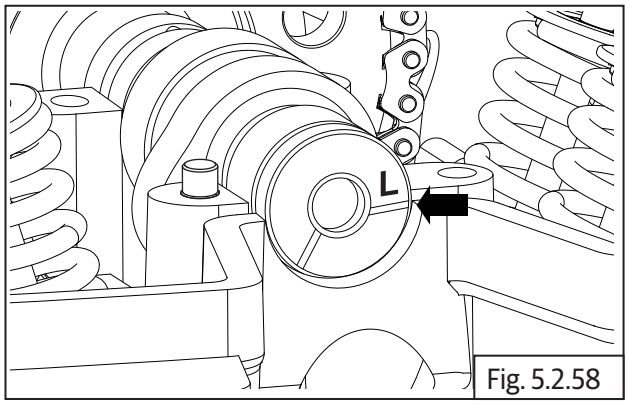

Fig. 5.2.58

- Tighten Hex head bolt **(M8) (a)** to specified torqueLocate and fit "C" washer **(a)** on camshaft.

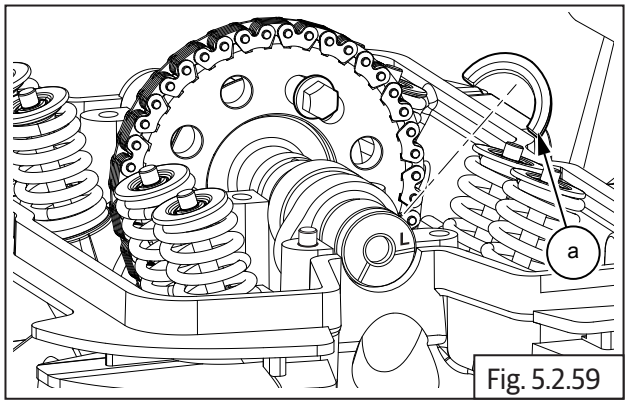

Fig. 5.2.59

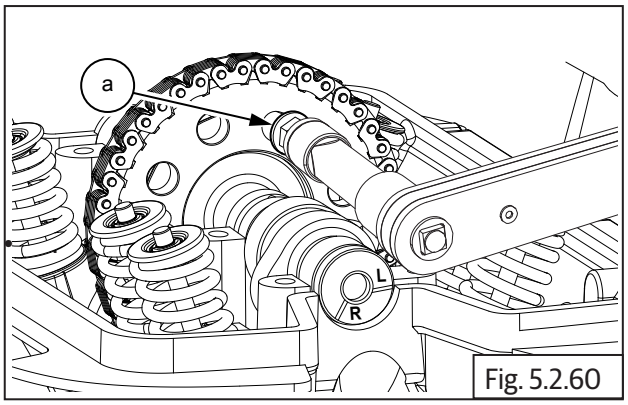

Fig. 5.2.60

	12 mm Socket with Torque wrench
Torque	33-35 N-m/3.3-3.5 kgf-m

5.2.21. Timing Chain Tensioner

- Ensure center bolt is removed from timing chain tensioner.

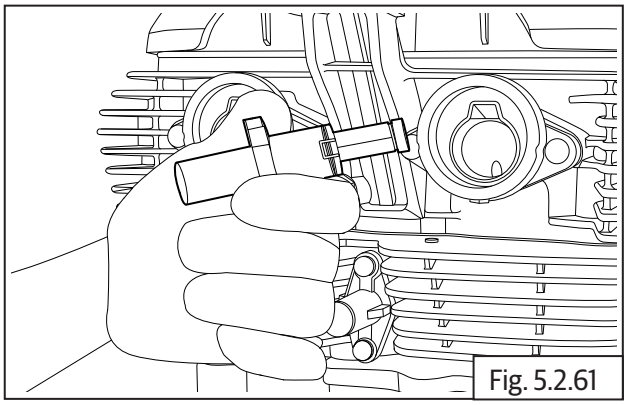
Fig. 5.2.61

- Assemble new gasket on chain tensioner housing **(a)**. Ensure the foot is fully retracted into chain tensioner and locate chain tensioner adjuster in cylinder barrel such that the longer side of the foot is facing towards cylinder barrel RH.
- Place gasket **(b)** on the tensioner.

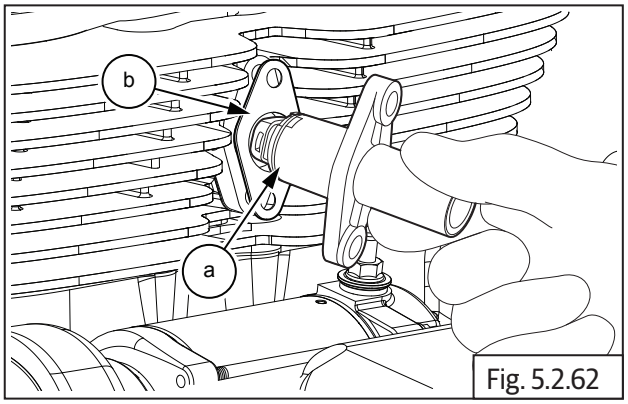

Fig. 5.2.62

- Assemble 2 Nos. Hex flange head bolt **(M6) (a)** on chain tensioner adjuster and tighten to specified torque.

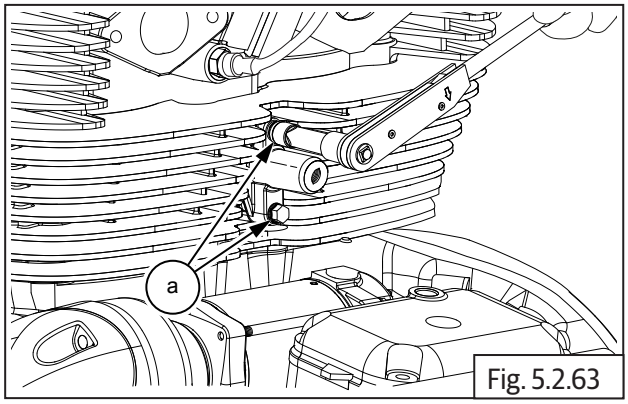

Fig. 5.2.63

	10 mm Socket with Torque wrench
Torque	10-12 N-m/1.0-1.2 kgf-m

- Locate screw driver into chain tensioner adjuster **(a)** and tighten tensioner screw till it comes to a stop. **DO NOT OVER TIGHTEN.**

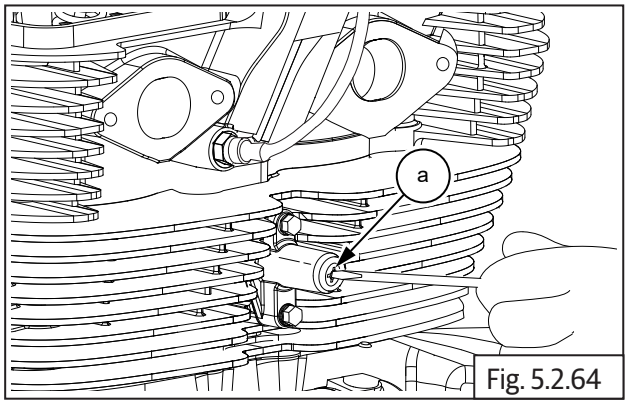

Fig. 5.2.64

	Screw driver

- Locate new O-ring **(b)** and, assemble Hex flange head bolt **(M6) (a)** on chain tensioner adjuster and tighten fully to specified torque.

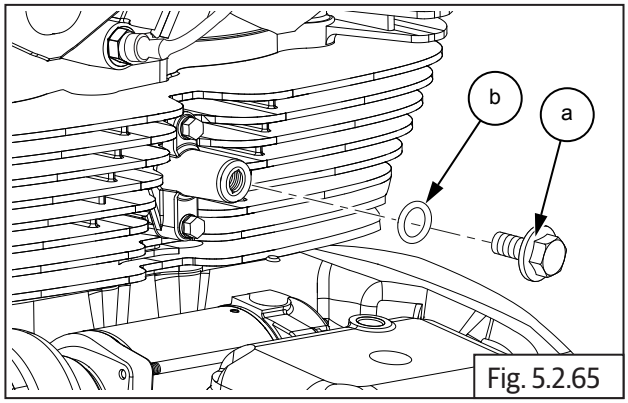

Fig. 5.2.65

	10 mm Socket with Ratchet and Torque wrench
Torque	4-5 N-m/0.4-0.5 kgf-m

5.2.22. Rocker Arms in Carriers LH and RH

Exhaust Rocker Arm in Carrier "L"

- Place the carrier **(a)** on a work table with the mark "L" facing upwards.

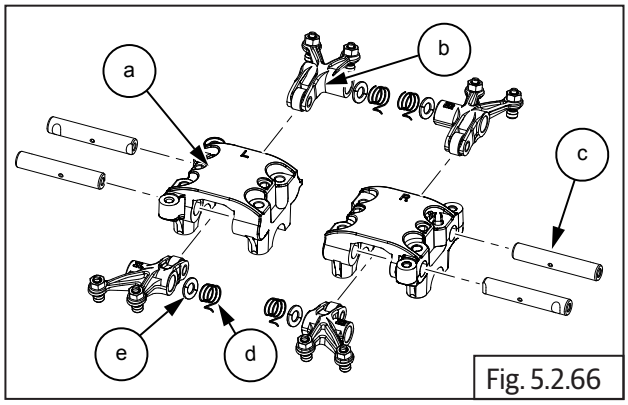

Fig. 5.2.66

- Locate rocker arm **(b)** with the marking "EL" into carrier "L" duly ensuring the following.
  - The roller of the rocker arm is inserted from the side marked "L".
  - The tappet adjustment screws are facing upwards.
  - Ensure the holes are aligned and insert spindle with its small chamfer side in the carrier.
  - Ensure cut away in spindle is correctly aligned to the carrier mounting hole.
  - Align and insert the spindle **(c)** into rocker carrier and rocker arm.

- Ensure spring **(d)** and spacer **(e)** properly aligned to the spindle **(c)**.

Intake Rocker Arm in Carrier "L"

- Locate rocker arm with the marking "IL" into carrier "L" duly ensuring the following.
  - The roller of the rocker arm is inserted from the OPPOSITE side marked "L".
  - The tappet adjustment screws are facing upwards.
  - Ensure the holes are aligned and insert spindle with its small chamfer side in the carrier.
  - Ensure cut away in spindle is correctly aligned to the carrier mounting hole.
  - Align and insert the spindle **(c)** into rocker carrier and rocker arm.
- Repeat the above process to assemble rocker arm "ER" and "IR" into carrier "R".

5.2.23. Rocker Carrier on Cylinder Head LH

NOTE
• *Ensure "L" mark on camshaft is aligned to cylinder head.*

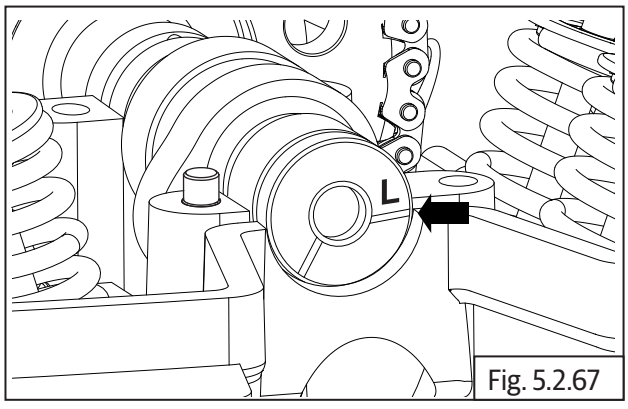

Fig. 5.2.67

- Insert special tool **(a)** in crankcase RH to lock the crankshaft and prevent rotation.

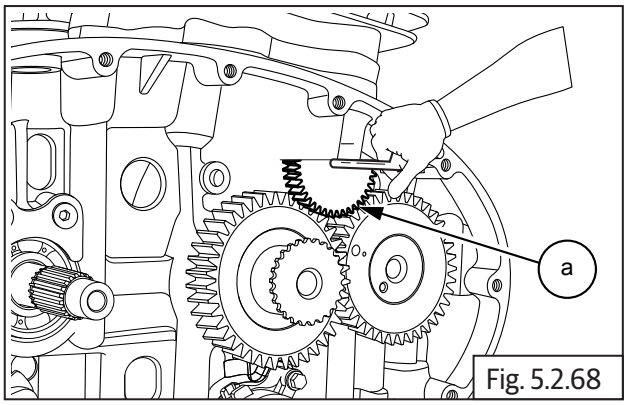

Fig. 5.2.68

SPL	Part No: ST-27533-2
	Part Name: Crank Gears Locking Tool

- Ensure the tappet adjuster locknuts and adjusters are fully loosened on the intake and exhaust rocker arms.
- Assemble rocker carrier LH **(a)** on cylinder head LH such that tappet adjusters are above the inlet and exhaust valves.
- Assemble 4 Nos. Hex flange head bolts **(M6) (b)** on rocker carrier and tighten in a crisscross pattern to specified torque.

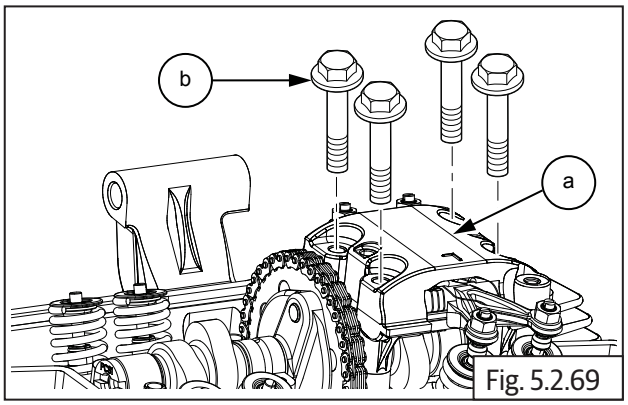

Fig. 5.2.69

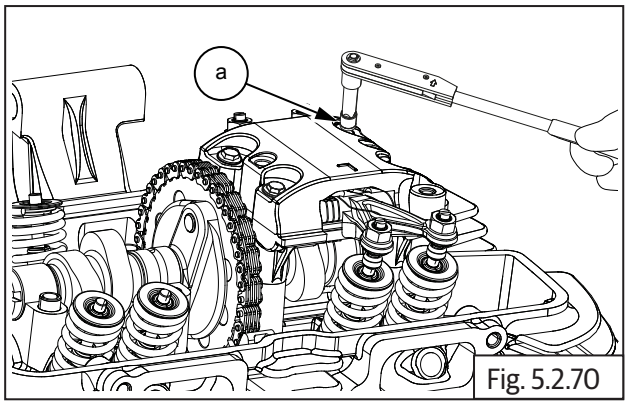

Fig. 5.2.70

	10 mm Socket with Torque wrench
Torque	10-12 N-m/10-1.2 kg-m

- Remove magneto and clutch locking tool from crankcase RH side.

5.2.24. Rocker Carrier on Cylinder Head RH

- Rotate magneto **(a)** clockwise and ensure reference mark "R" is aligned with cylinder head.

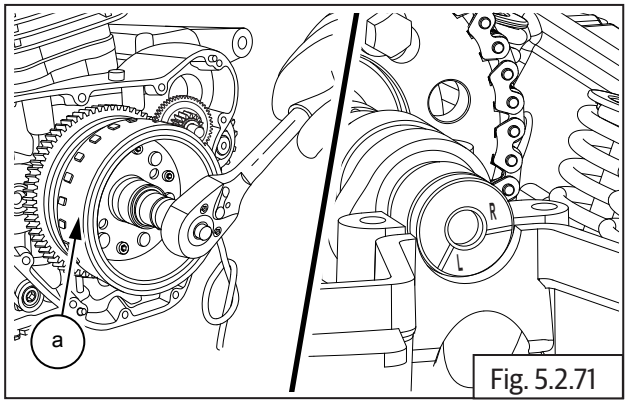

Fig. 5.2.71

	17 mm Socket with Ratchet

- Ensure the tappet adjuster locknuts and adjusters are fully loosened on the intake and exhaust rocker arms.
- Assemble rocker carrier RH **(a)** on cylinder head RH such that the tappet adjusters are above the inlet and exhaust valves.
- Assemble 4 Nos. Hex flange head bolts **(M6) (b)** on rocker carrier **(a)** and tighten in a crisscross pattern to specified torque.

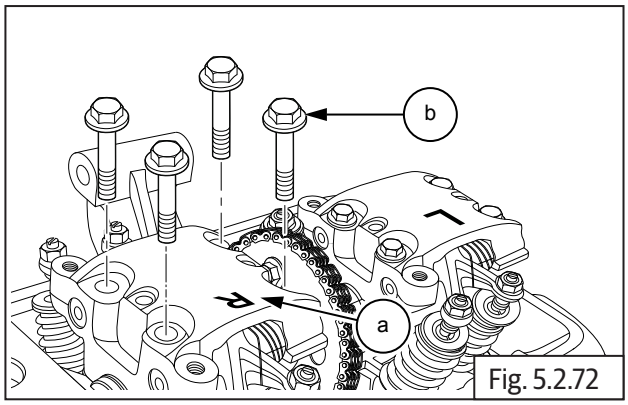

Fig. 5.2.72

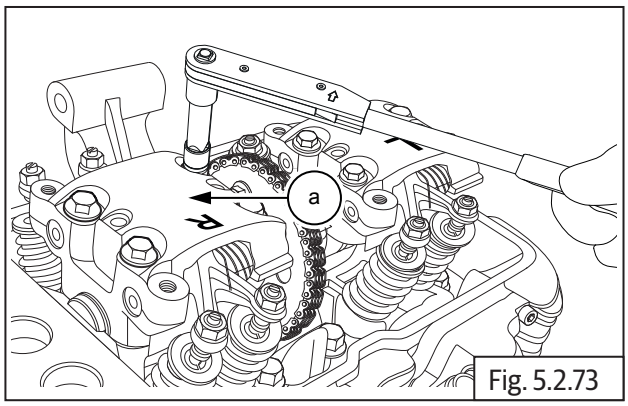

Fig. 5.2.73

	10 mm Socket with Torque wrench
Torque	10-12 N-m/10-1.2 kgf-m

5.2.25. Tappet Clearance Adjustment

Tappet Clearance Cylinder Head LH

- Ensure "L" mark on camshaft **(a)** is aligned to cylinder head.

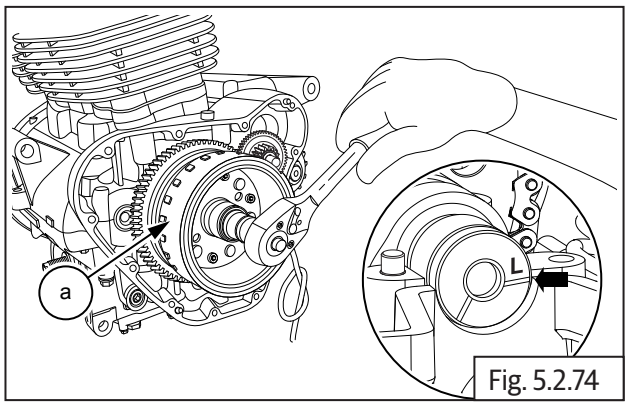

Fig. 5.2.74

- Loosen tappet adjuster screw locknut **(a)** with tappet adjusting tool and ensure locknut is sufficiently loose.

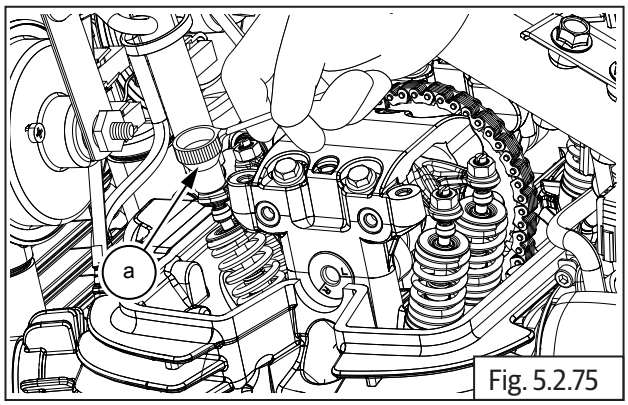

Fig. 5.2.75

- Insert a screwdriver into the tappet adjusting tool **(b)** and ensure it is seated correctly on the adjuster screw **(a)**.

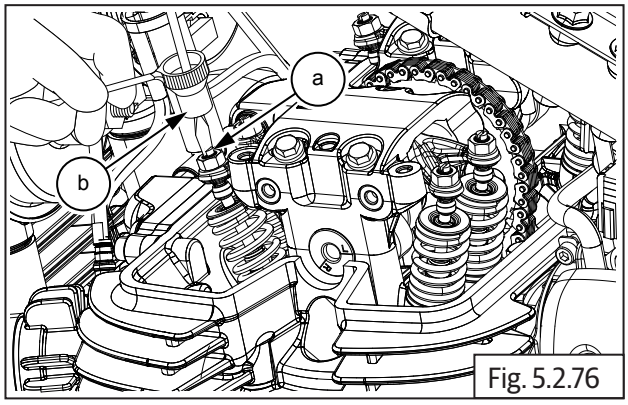

Fig. 5.2.76

- Locate feeler strip **(a)** between adjuster screw and valve stem as per thickness mentioned below.

For intake	0.08 mm
For exhaust	0.18 mm

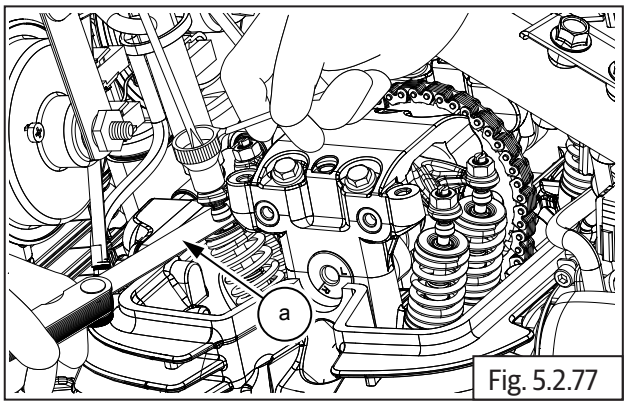

Fig. 5.2.77

- Gently pull out feeler strip **(a)** and check if it comes out freely OR with resistance.

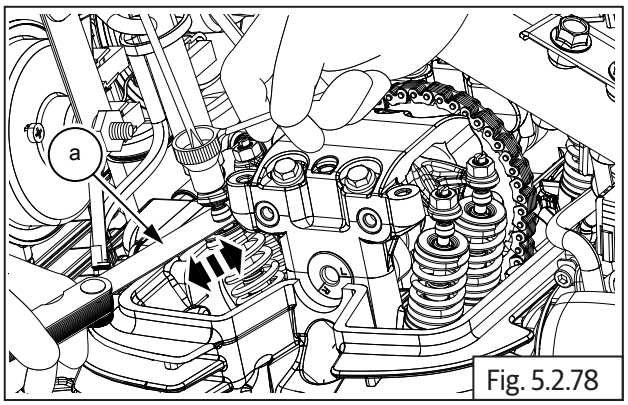

Fig. 5.2.78

- In case feeler strip comes out freely the adjuster screw has to be tightened.
- In case feeler strip movement is hard, the adjuster screw must be loosened.
- Tighten/loosen adjuster screw using screw driver, while simultaneously checking correct and smooth movement of feeler strip.

- Ensure tappet adjusting tool **(a)** does not rotate while adjusting the screw.

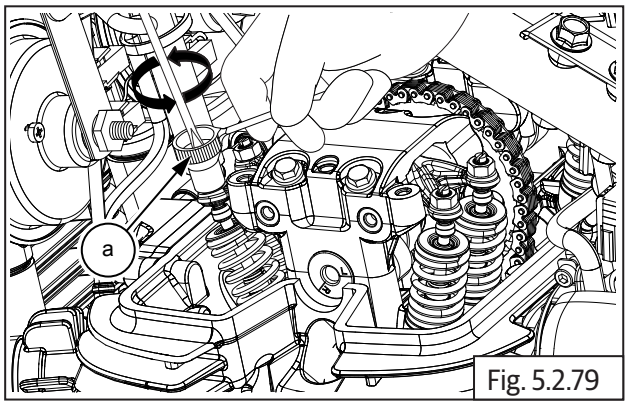

Fig. 5.2.79

- After setting correct gap, remove feeler strip, hold screw driver firmly such that the setting **DOES NOT** gets disturbed and gently lock the lock nut against rocker arm using special tool **(a)**.

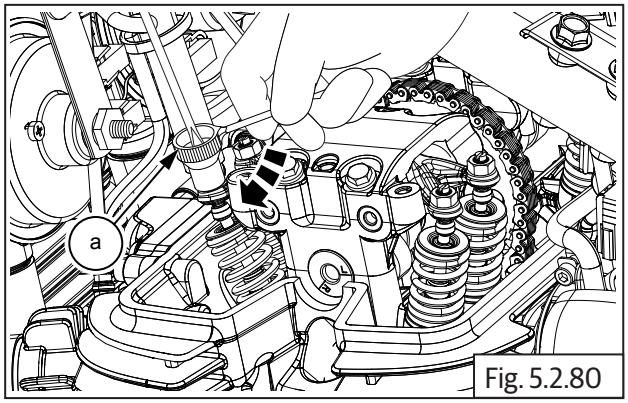

Fig. 5.2.80

- Repeat above steps to adjust the other tappet in cylinder head LH.

	10 mm Socket and Torque wrench
Torque	8-10 N-m/0.8-1 kgf-m

NOTE
• *Reconfirm correctness of tappet clearances before final locking of lock nuts.*

⚠ **CAUTION**
Do not adjust tappets with less OR no clearance as it will result in poor compression, valve burn-out and wear-out of tappet adjuster foot. **Do not adjust tappet with high clearance as will result in noise and insufficient opening of the valves.**

- Remove screw driver and both special tools after adjustment is complete.

Tappet Clearance Cylinder Head RH

- Ensure "R" mark on camshaft **(a)** is aligned to cylinder head.

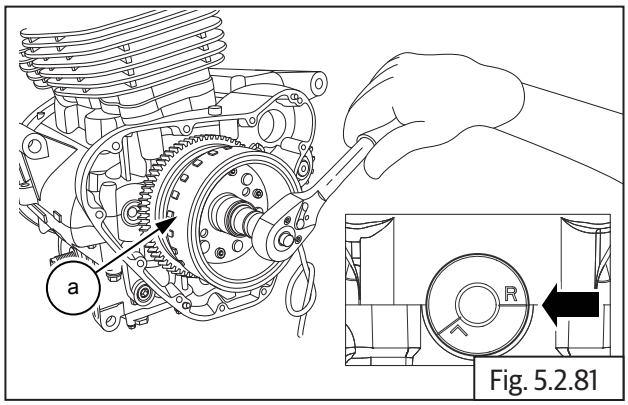

Fig. 5.2.81

- Adjust the tappets clearances as mentioned in tappets adjustment LH.

5.2.26. Cover Cylinder Head

NOTE
• *Ensure the cover-cylinder head seating surface and gasket seating groove are clean.* • *Ensure sealant is applied in head gasket groove before assembly.*

- Locate new rubber gasket in the groove in cylinder head cover and ensure it is properly and evenly seated.

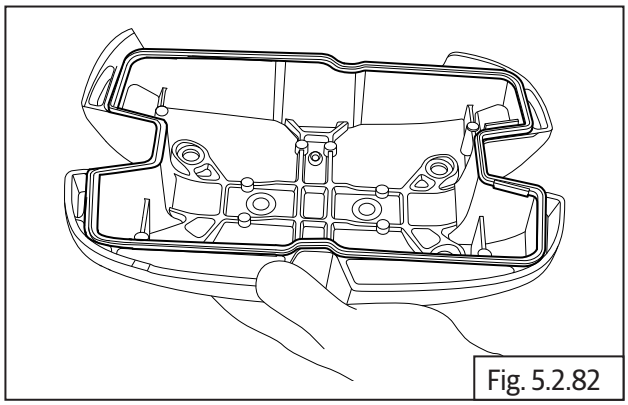
Fig. 5.2.82

- Locate cylinder head cover **(a)** on cylinder head with its narrow slot facing towards the front of the engine **(b)**.

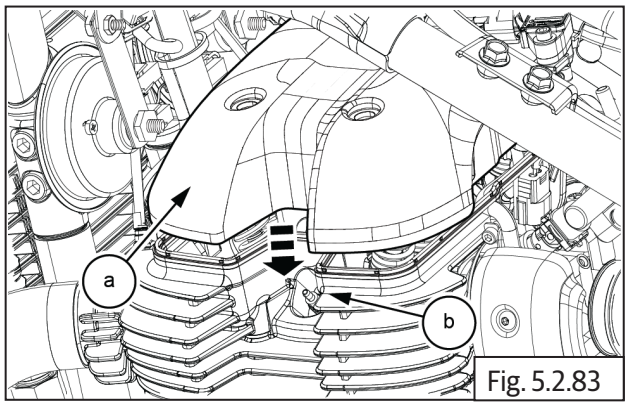

Fig. 5.2.83

- Assemble new seal washers **(a)** on the 4 Nos. Hex flange head bolts **(M6) (b)**.
- Locate the bolts on cylinder head cover **(c)** and tighten bolts to cylinder head evenly to specified torque.

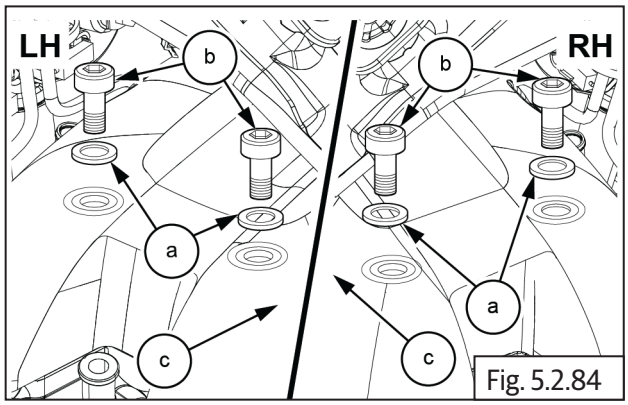

Fig. 5.2.84

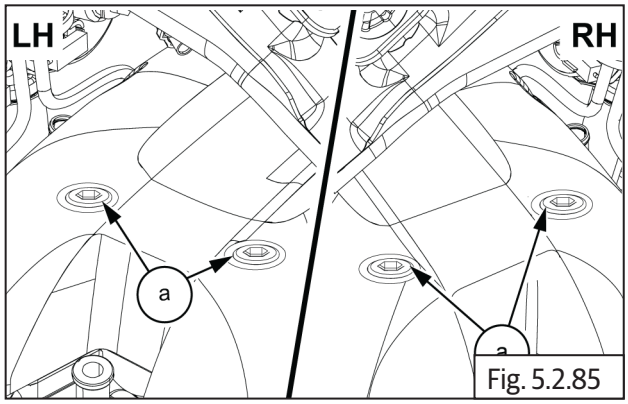

Fig. 5.2.85

	8 mm Socket with Torque wrench
Torque	10-12 N-m/1.0-1.2 kgf-m

5.2.27. Inlet Manifold Rubber Flanges LH & RH

- Locate the 2 Nos. inlet manifold rubber flanges **(a)** on the cylinder heads, duly ensuring the "cut away" in the manifolds are matching with the "cut away" in the cylinder head.

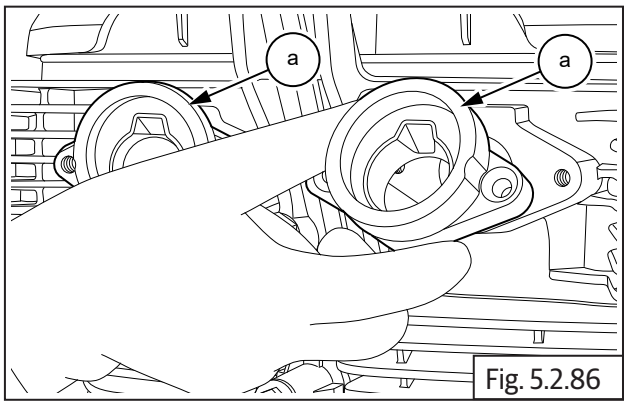

Fig. 5.2.86

- Locate and tighten 2 each countersunk socket head bolts **(M5) (a)** on the inlet manifold rubber flanges LH & RH.

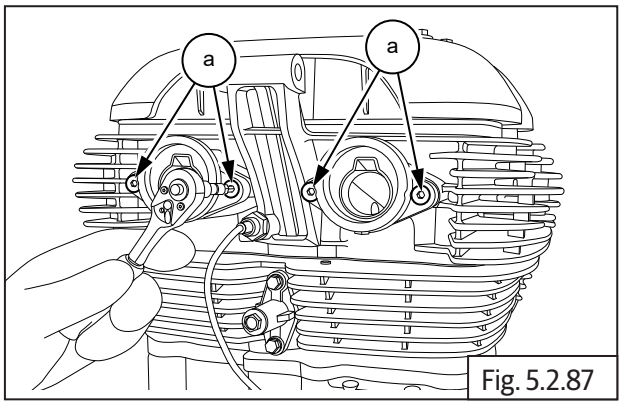

Fig. 5.2.87

	4 mm Allen socket and Torque wrench
Torque	2-3 N-m/0.2-0.3 kgf-m

5.2.28. Throttle Body

- Ensure clips **(a)** are in position on inlet manifolds LH and RH and loosened sufficiently.
- Locate throttle body **(b)** on the inlet manifold **(c)** and ensure it is properly seated on both LH and RH inlet manifolds fully.

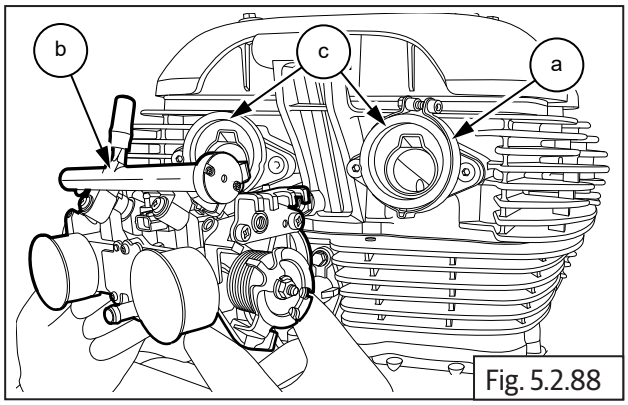

Fig. 5.2.88

- Tighten both clips screws **(M6) (a)** sufficiently over inlet manifolds LH & RH.

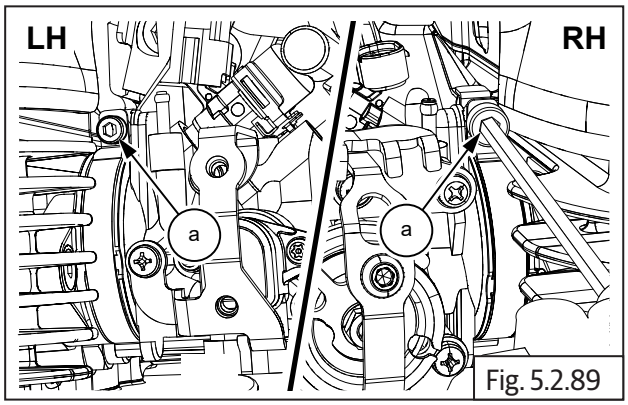

Fig. 5.2.89

	5 mm Allen socket with Ratchet

5.2.29. Air Filter Hoses On Throttle Body

- Ensure clips **(a)** are in position on air filter hoses and loosened sufficiently.
- Locate air filter hoses **(b)** on throttle body **(c)** and ensure they are properly seated on the throttle body.

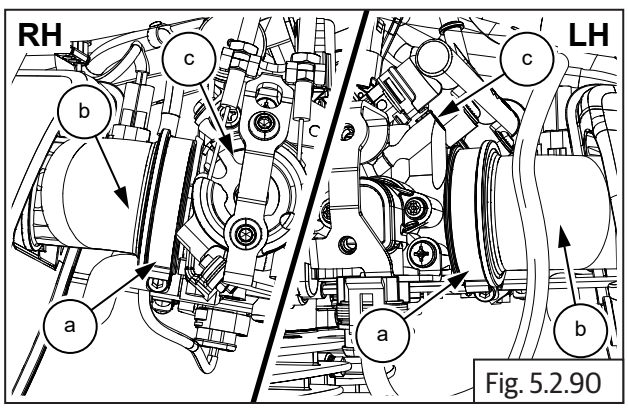

Fig. 5.2.90

- Tighten both clips screws **(M6) (a)** sufficiently over the air filter hoses.

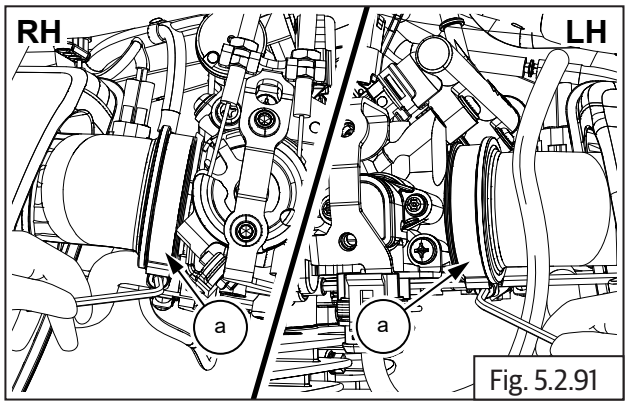

Fig. 5.2.91

	5 mm Allen socket with Ratchet

5.2.30. Throttle Cables

- Assemble throttle cables on throttle body.

5.2.31. Injector, TPS, MAPS, ISC Connections

Injector, Throttle Position Sensor (TPS), Manifold Absolute Pressure Sensor (MAP) and Idle Speed Controller (ISC) Connections

- Connect the LH and RH injector connectors **(a)** located on throttle body **(b)**.

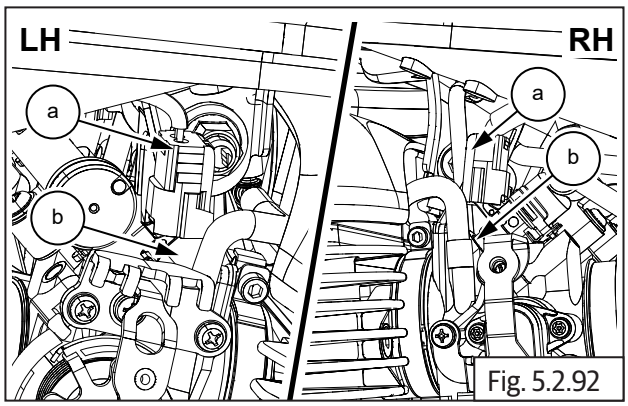

Fig. 5.2.92

- Connect TPS connector **(a)** to sensor **(b)** at bottom of throttle body.

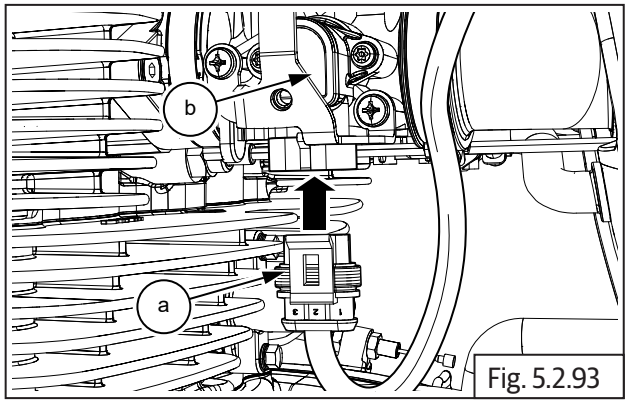

Fig. 5.2.93

- Connect idle speed sensor connector **(a)** on throttle body **(b)**.

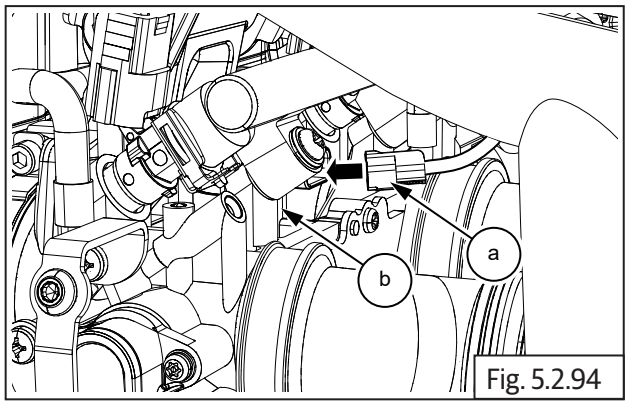

Fig. 5.2.94

- Connect purge valve hoses **(a)** to the inlet pipes on the top of the throttle body.

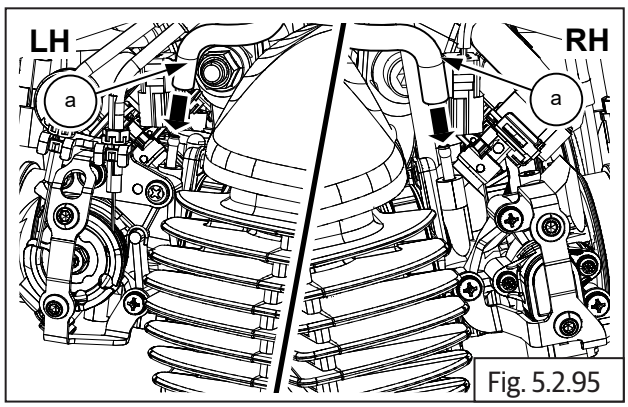

Fig. 5.2.95

5.2.32. Throttle Body Covers on LH and RH

- Locate the LH and RH cover into throttle body **(b)**
- Locate and tighten 6 Nos. allen head screws **(a)** on LH and RH throttle body .

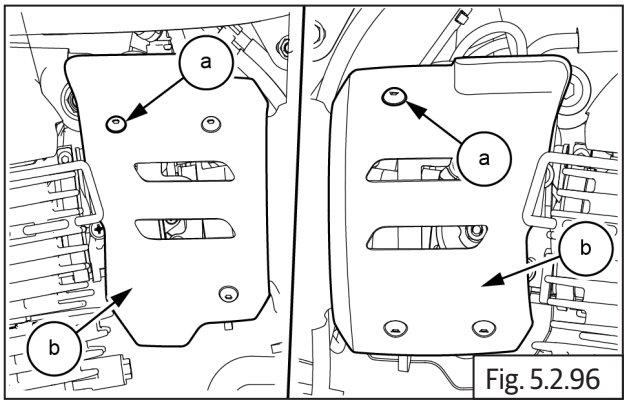

Fig. 5.2.96

	4 mm Allen Socket with Ratchet
Torque	7 N-m / 0.7 kgf-m

- Position ABS modulator with bracket on frame and tighten with bolts.
- Assemble the following parts:
  - Horn and electrical connections.
  - Connect HT cable.
  - Fuel tank.
  - Side panels LH.
  - Rider seat assembly.
  - Assemble the RH side panel.

5.2.33. Spark Plugs

- Locate and tighten spark plug **(a)** to RH cylinder head.

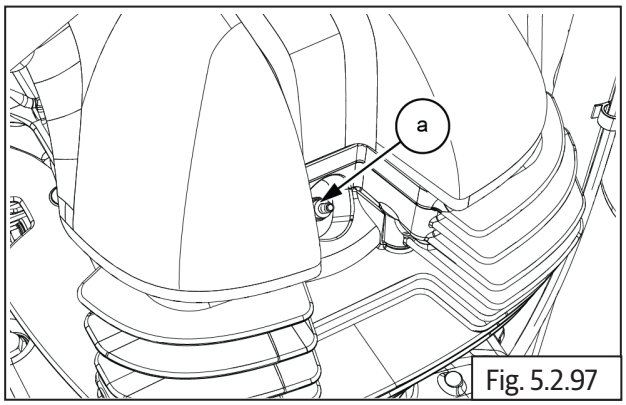

Fig. 5.2.97

	16 mm Socket with Ratchet

- Repeat the procedure to assemble LH spark plug.

NOTE
• *Apply Loctite Anti - Seize LB 804 on the threads of the Spark Plug before installation*

5.2.34. Spark Plug Suppressor Caps

Spark Plug Suppressor Caps on LH and RH Cylinder Heads

- Locate spark plug suppressor cap **(a)** on spark plug in LH cylinder head **(b)**.

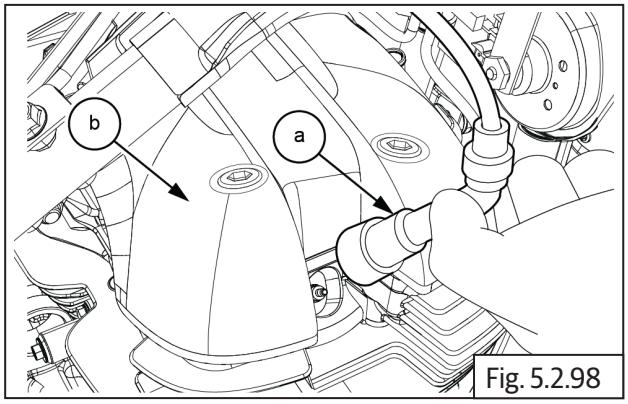

Fig. 5.2.98

- Locate spark plug suppressor cap **(a)** on spark plug in RH cylinder head **(b)**.

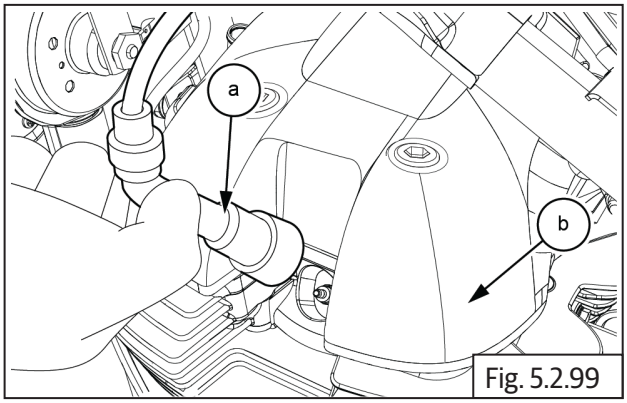

Fig. 5.2.99

5.2.35. Star Index

- Locate and tighten 2 Nos. Hex head bolts **(M6) (a)** on selector fork shaft stopper plate.

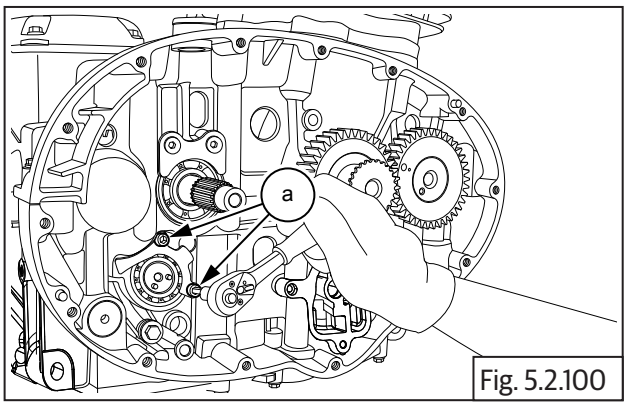

Fig. 5.2.100

	5 mm Allen socket with Torque wrench
Torque	12 N-m/1.2 kgf-m

- Locate and tighten Hex socket head stepped bolt **(M6) (a)** on gear shift cam drum.

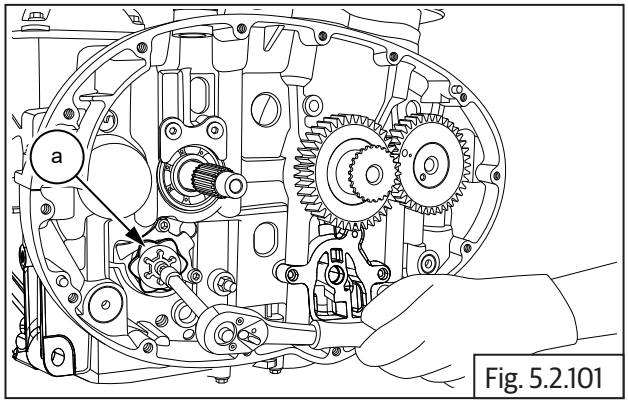

Fig. 5.2.101

	5 mm Allen socket with Ratchet

5.2.36. Star Index Stopper

- Locate spring and stopper plate support on RH lower crankcase and assemble Hex head flange bolt **(M6) (a)** ssssss.

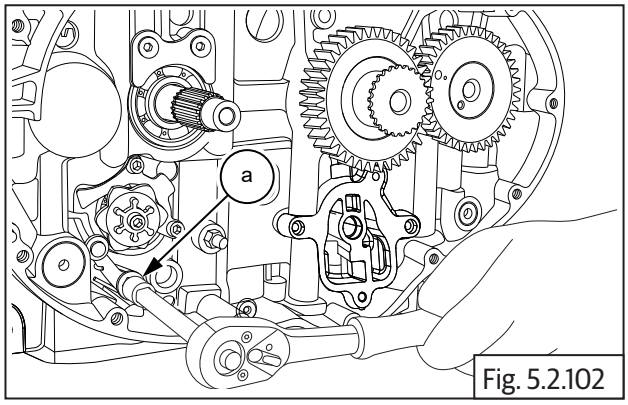

Fig. 5.2.102

	10 mm Socket with Torque wrench
Torque	12 N-m/1.2 kgf-m

NOTE
• *Handle stopper plate tension spring carefully else it may damage supporting components.*

Shifter Selector Shaft Assembly

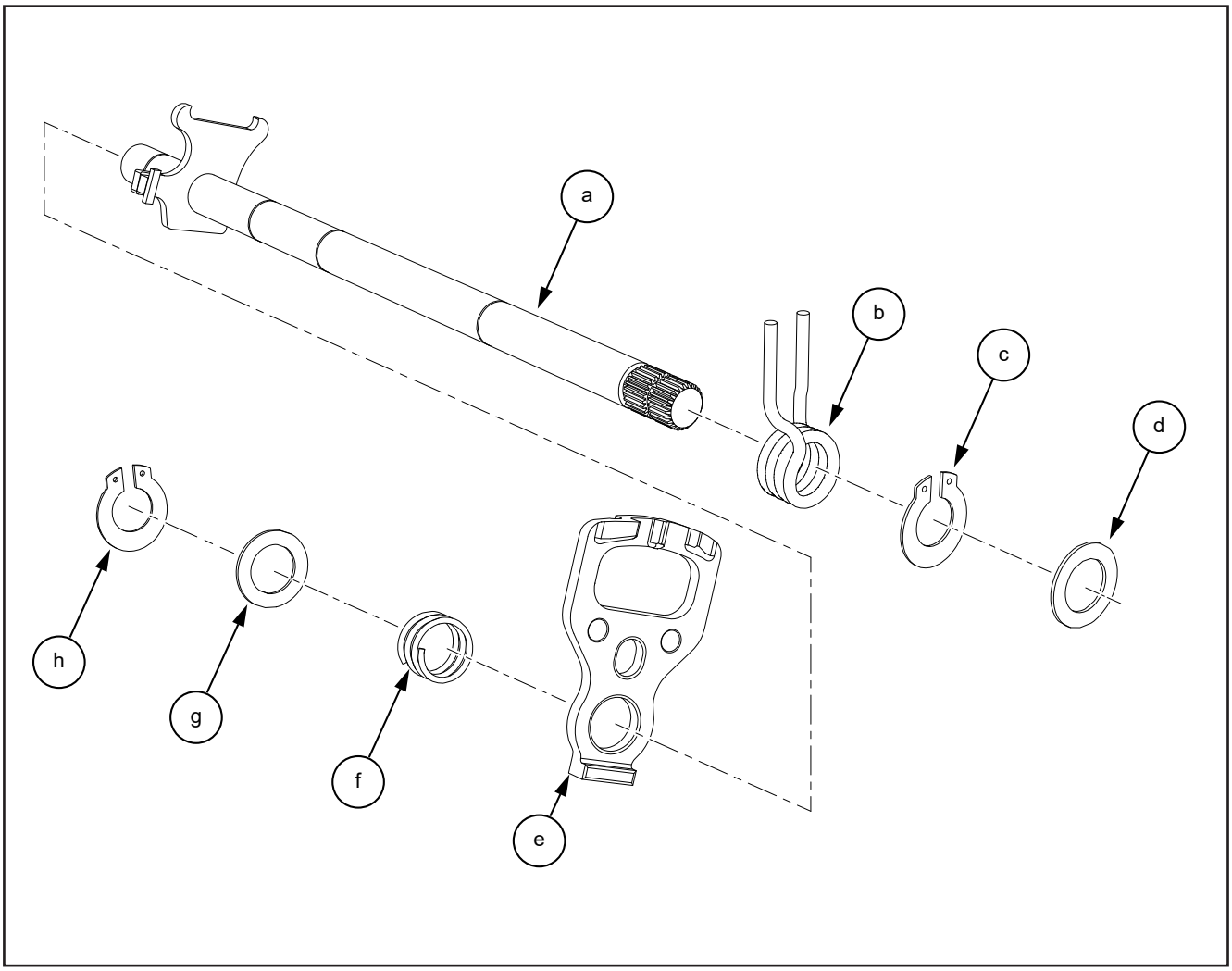

Item No.	Description	Quantity
a	Shifter shaft	1
b	Spring	1
c	Circlip	1
d	Washer	1
e	Outer plate	1
f	Spring	1
g	Washer	1
h	Circlip	1

5.2.37. Shifter Selector Shaft

- Assemble inner spring **(a)** from the longer side of shifter shaft **(b)**.
- Ensure the legs of the spring are correctly located in the plate on the shifter shaft.

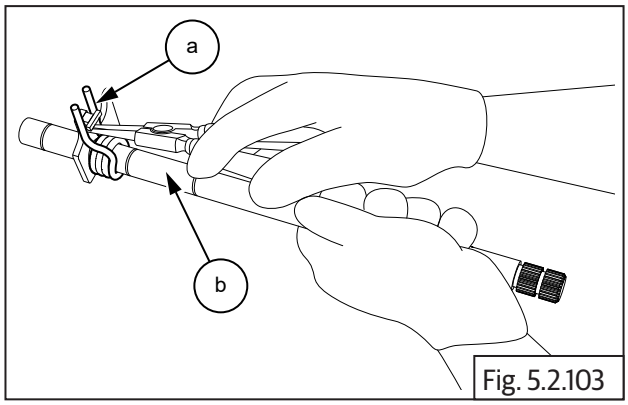

Fig. 5.2.103

	Circlip plier

- Assemble inner circlip **(a)** on longer end of shifter shaft **(b)**. Ensure it is properly seated on shifter shaft groove near the spring.

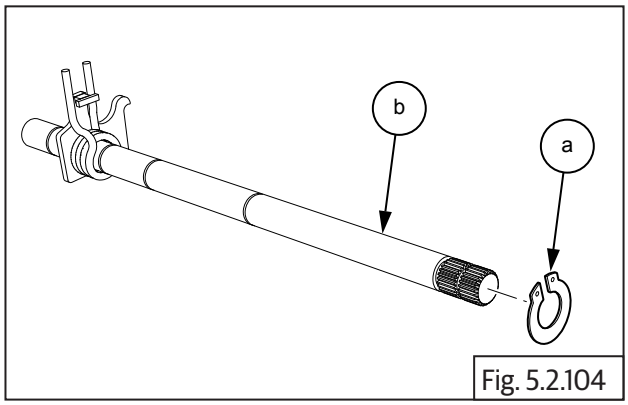

Fig. 5.2.104

	Circlip plier

- Assemble 1st inner washer **(a)** from the longer end of shifter shaft **(b)**.

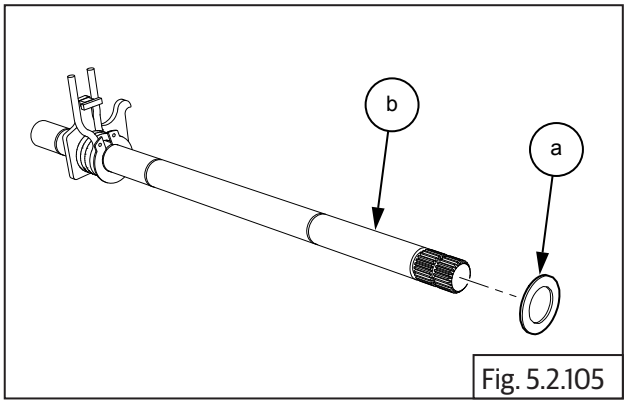

Fig. 5.2.105

- Assemble outer plate **(a)** from smaller end of shifter shaft with its projection facing towards the longer end of the shaft.
- Ensure the peg on the shifter shaft is located correctly in the hole on the outer plate **(a)**.

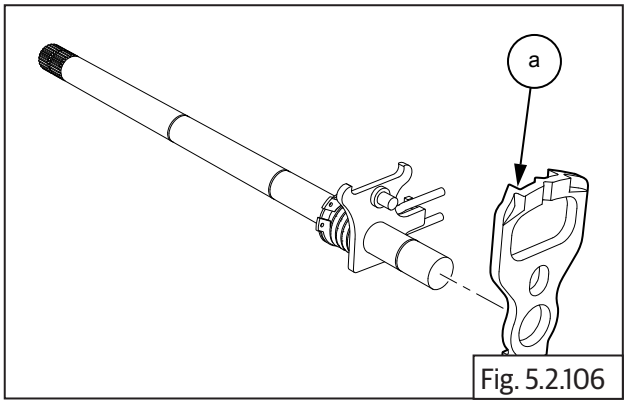

Fig. 5.2.106

- Assemble outer spring **(a)** from smaller end of shifter shaft.

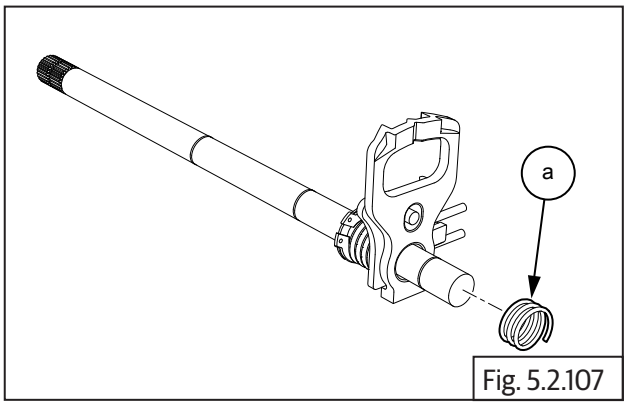

Fig. 5.2.107

- Assemble outer washer **(a)** from the smaller end of shifter shaft.

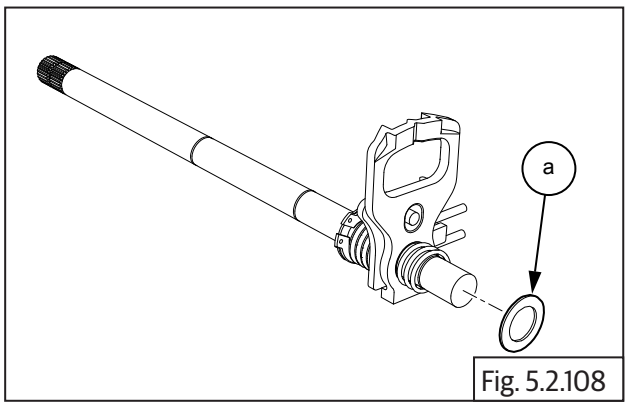

Fig. 5.2.108

- Assemble outer circlip **(a)** from smaller end of shifter shaft.

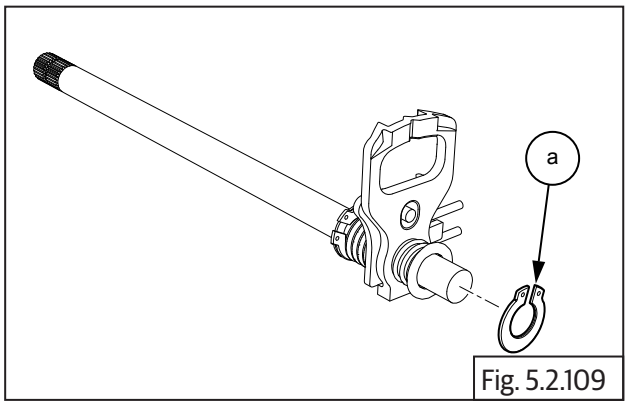

Fig. 5.2.109

	Circlip plier

- Insert longer end of the shifter shaft **(a)** into the hole in the lower crankcase from the RH side.
- Ensure the shifter plate is correctly seated over the star index.

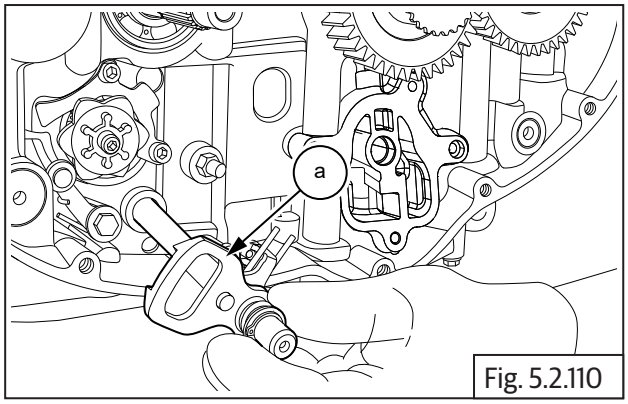

Fig. 5.2.110

- Assemble washer **(a)** on the shifter shaft on the LH side.

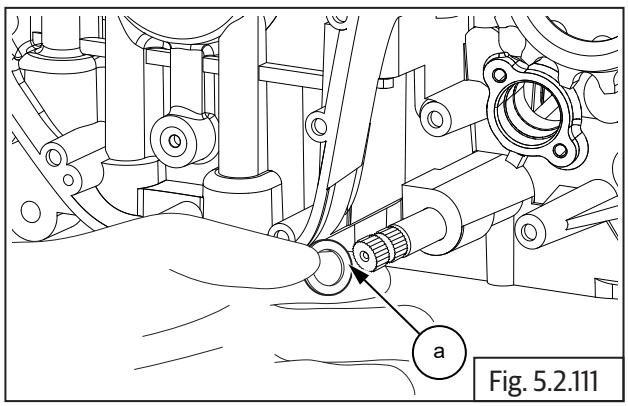

Fig. 5.2.111

- Assemble circlip **(a)** on the shifter shaft at the LH side and ensure it is correctly seated and locked in the groove on the shifter shaft.

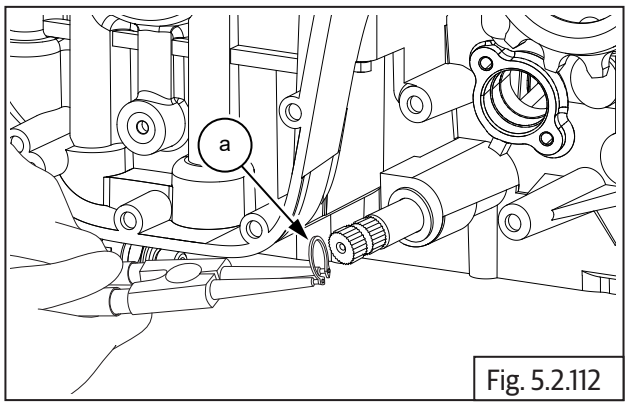

Fig. 5.2.112

	Circlip plier

5.2.38. Oil Pump

- Locate oil pump mounting point below crankshaft
- gear in RH crankcase.
- Assemble 4 Nos. Hex flange head bolts **(M6) (a)** on oil pump **(b)** and tighten bolts to specified torque.

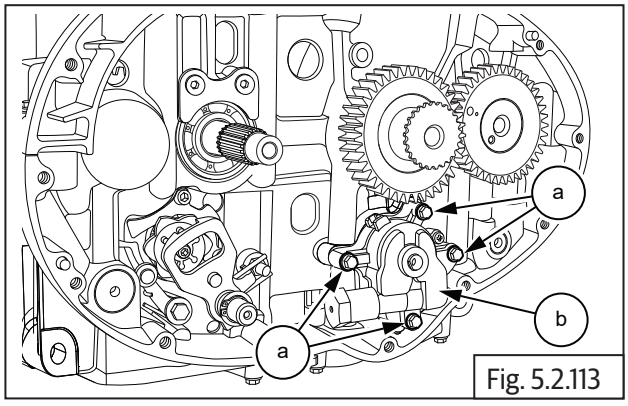

Fig. 5.2.113

	10 mm Socket with Ratchet
Torque	10-12 N-m/1.0-1.2 kgf-m

- Locate and fit oil pump drive chain **(a)** on crankshaft gear **(b)** and sprocket on oil pump.
- Pump Sprocket OUT and Pump Chain Coloured Link to be facing outside when assembling.

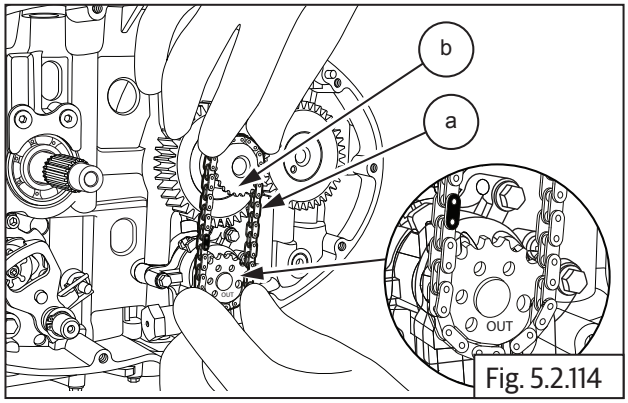

Fig. 5.2.114

- Locate Hex flange head bolt **(M6) (a)** on oil pump. **DO NOT TIGHTEN FULLY**.

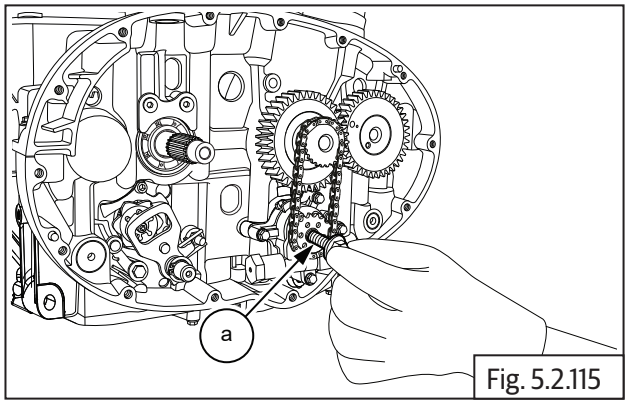

Fig. 5.2.115

- Tighten the bolt to specified torque.

NOTE
• *Lock the crank shaft by using special tool to prevent rotation while tightening bolt.*

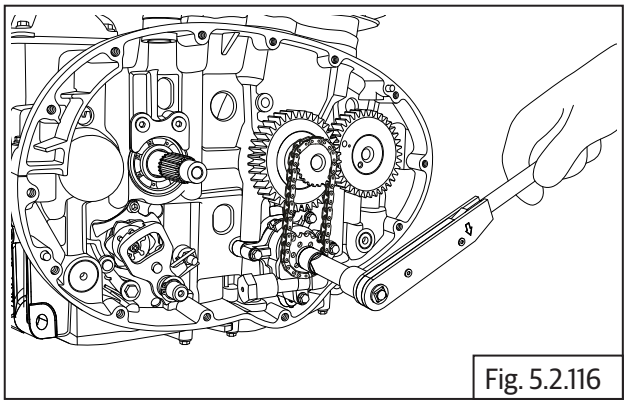
Fig. 5.2.116

	10 mm Socket with Torque wrench
Torque	10-12 N-m/1.0-1.2 kgf-m

5.2.39. Clutch Assembly

- Ensure collar on bush **(a)** is facing inward and assemble it on countershaft **(b)**. Ensure it is seated properly.

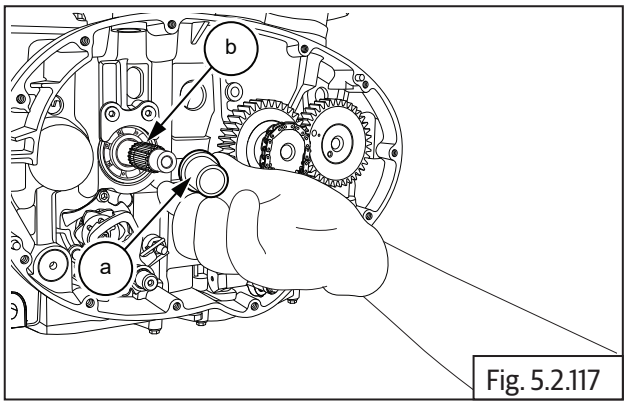

Fig. 5.2.117

- Assemble needle bearing **(a)** on counter shaft **(b)**.

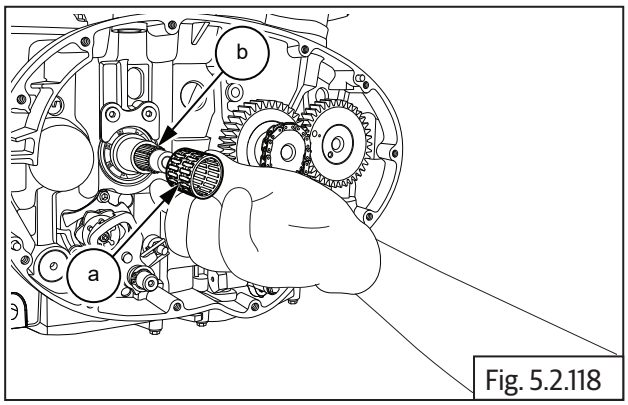

Fig. 5.2.118

- Locate clutch housing **(a)** on counter shaft, with its lugs **(b)** facing outside.
- Ensure the clutch housing gear is correctly meshed with the gear on crankshaft.

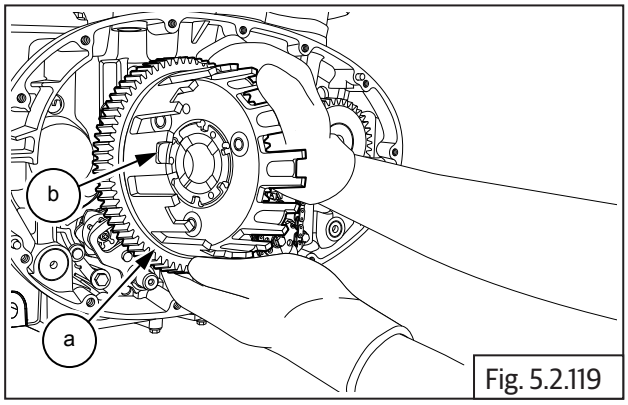

Fig. 5.2.119

- Assemble thrust washer **(a)** on counter shaft.

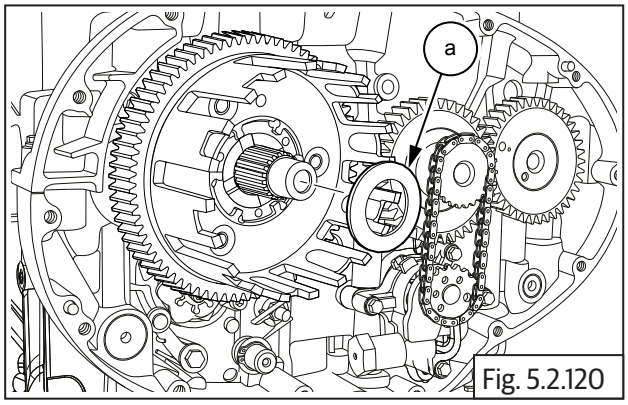

Fig. 5.2.120

- Locate bell assembly **(a)** on the splines on counter shaft **(b)**.

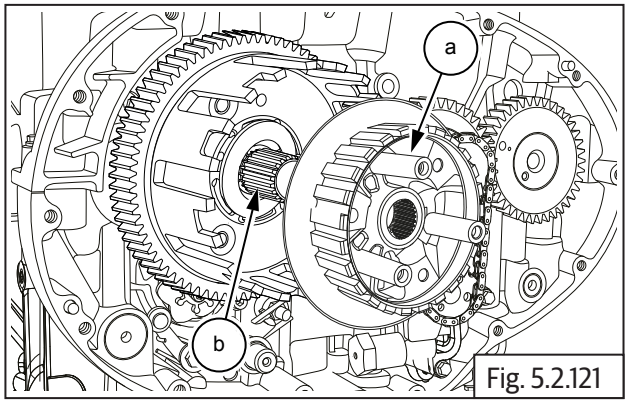

Fig. 5.2.121

- Locate the anti-judder steel washer-plain, in the groove in the clutch bell.
- Assemble Belleville washer over judder washer in the clutch bell. ENSURE THE "HUMP" OF THE BELLEVILLE WASHER IS FACING INSIDE AND SEATED AGAINST THE JUDDER WASHER.
- Assemble 1st friction plate with larger ID (less friction area) ensuring the splines of the plate are correctly positioned and located on the clutch housing.
- Assemble 1st steel plate ensuring the splines on the plate are correctly positioned and located on the clutch bell.
- Assemble 2nd friction plate on the clutch housing and ensure it is seated against the 1st steel plate.
- Assemble 2nd steel plate on clutch bell.
- Assemble 3rd friction plate on clutch housing.

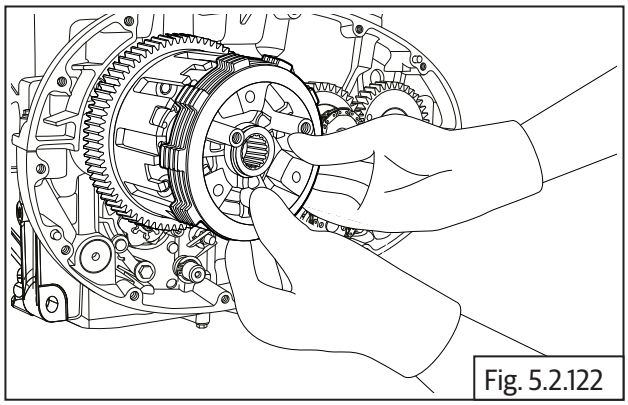
Fig. 5.2.122

- Assemble washer **(a)** on countershaft.

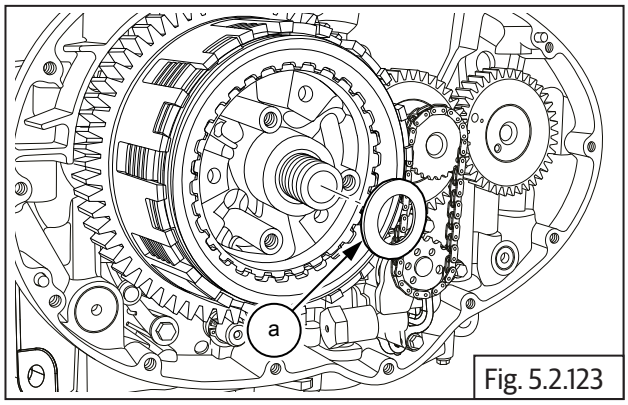

Fig. 5.2.123

- Locate the Hex "U" nut **(M17) (a)**.

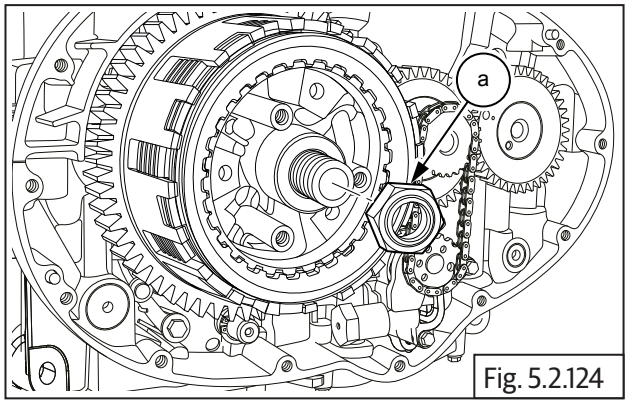

Fig. 5.2.124

⚠ CAUTION
Hex U nut is left hand thread. Turn anticlockwise to tighten nut on shaft.

- Locate and hold special tool on clutch assembly and tighten clutch hub nut to specified torque.

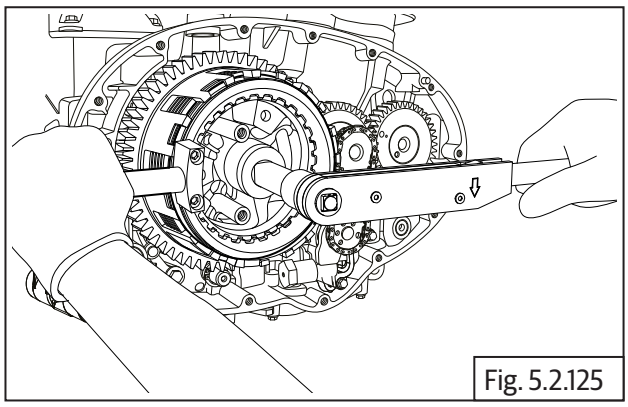
Fig. 5.2.125

SPL 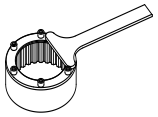	Part No: ST-27558-1
	Part Name: Clutch plate holder with Torque wrench
Torque	110-130 N-m/11.0-13.0 kgf-m

- Remove special tool and further assemble the following
  - 3rd steel plate on clutch bell.
  - 4th Friction plate on clutch housing.
  - 4th steel plate on clutch bell.
  - 5th Friction plate on clutch housing.
  - 5th steel plate on clutch bell.

- Locate 6th friction plate **(a)** with larger ID (less friction area) on clutch hub **(b)** and ensure it is seated properly against the inner face of the clutch hub.

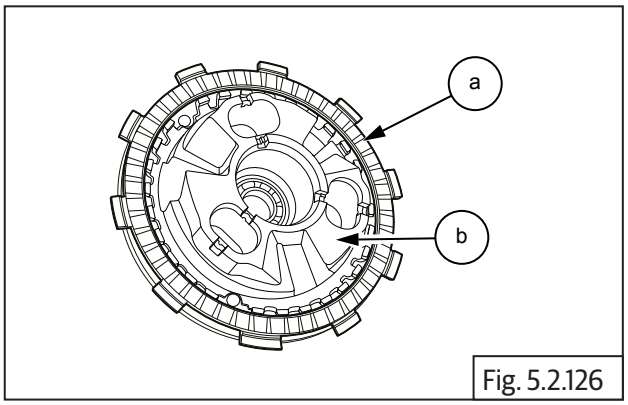

Fig. 5.2.126

- Locate 6th steel plate **(a)** on the splines in clutch hub **(b)** and ensure it is properly seated against the 6th friction plate.

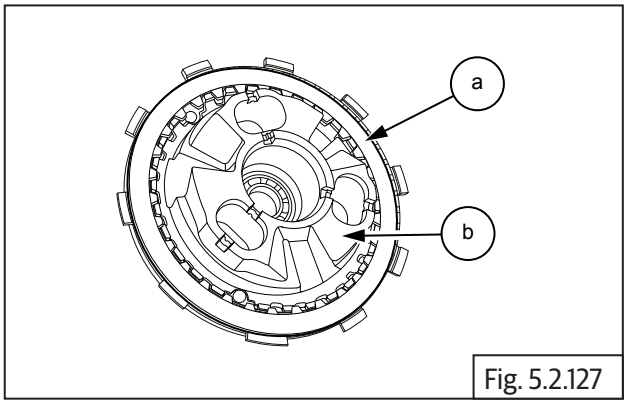

Fig. 5.2.127

- Locate 7th friction plate **(a)** with larger ID (less friction area) on clutch hub **(b)** such that its lugs are offset and between 2 lugs of the 6th friction plate.

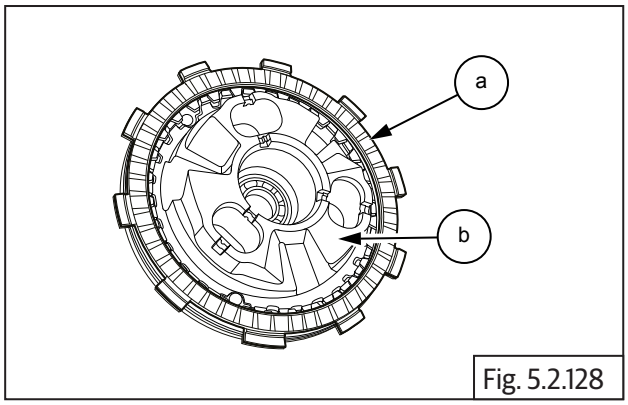

Fig. 5.2.128

- Locate clutch hub **(a)** into clutch bell duly ensuring the following
- Insert pull rod **(b)** into clutch housing from the inside, such that the serrations on the pull rod are facing outside.
- Ensure pull rod is fully and properly seated against the bearing on the inside.

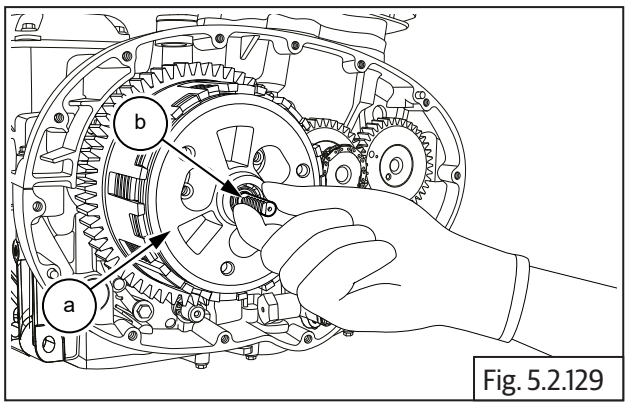

Fig. 5.2.129

- The outer lugs of 7th friction plate are correctly located in the INNER slots of the clutch housing.
- The outer lugs of 6th friction plate are correctly located in the OUTER slots of the clutch housing.
- The 3 lugs of the clutch hub are correctly positioned between the 3 slots in the clutch bell (Gently rotate clutch hub back and forth, to match the slots of the clutch bell).
- The three mounting studs of the clutch bell are central to the slots in the clutch hub.
- Insert 3 Nos. compression springs **(a)** in hub.

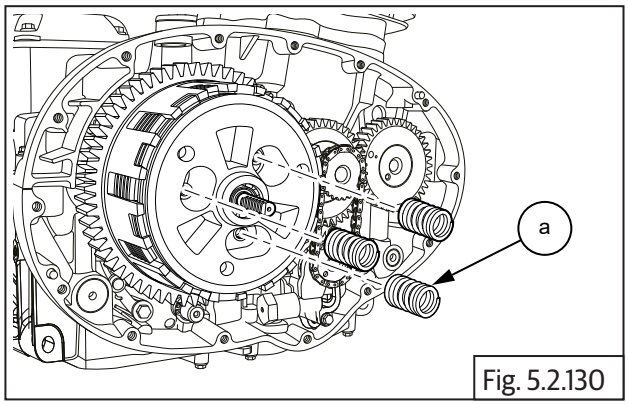

Fig. 5.2.130

- Locate pressure plate **(a)** on clutch hub with the words **"OUT"** and **"FR"** facing outside.
- Assemble 3 Nos. Hex bolts **(M6) (b)** and tighten pressure to clutch hub, sequentially to specified torque.

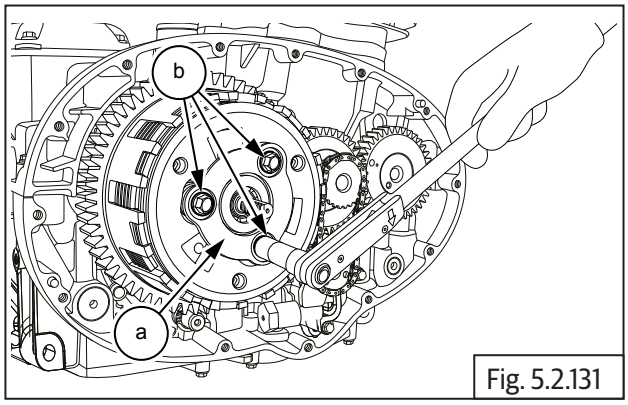

Fig. 5.2.131

	10 mm Socket with Torque wrench
Torque	10-12 N-m/1.0-1.2 kgf-m

5.2.40. Oil Level Window on Clutch Cover

- Locate new oil window **(a)** on clutch cover with the window facing towards clutch cover outer and gently press till it is seated fully inside.

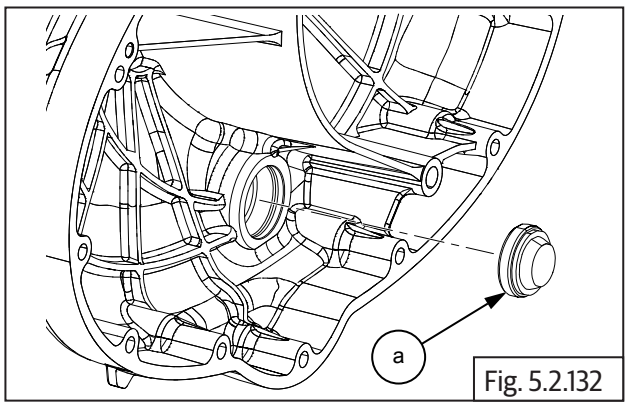

Fig. 5.2.132

NOTE
• *Apply Loctite 243 around the Oil Level Inspection window before installing in the clutch case.*

- Assemble circlip **(a)** in the groove in clutch cover and ensure it is correctly locked in the clutch cover.

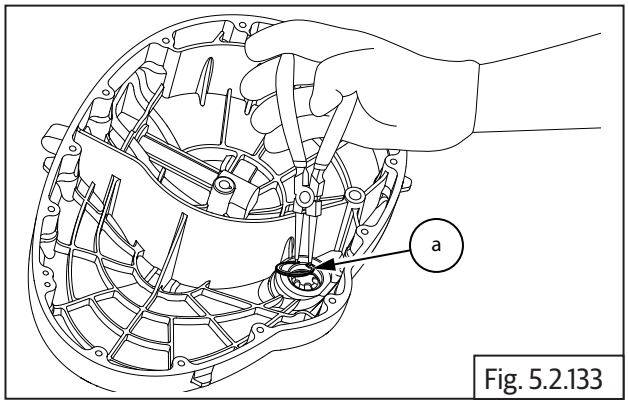

Fig. 5.2.133

	Circlip plier

5.2.41. Clutch Actuating Lever Assembly

- Ensure needle bearings **(a)** are assembled in the clutch cover.

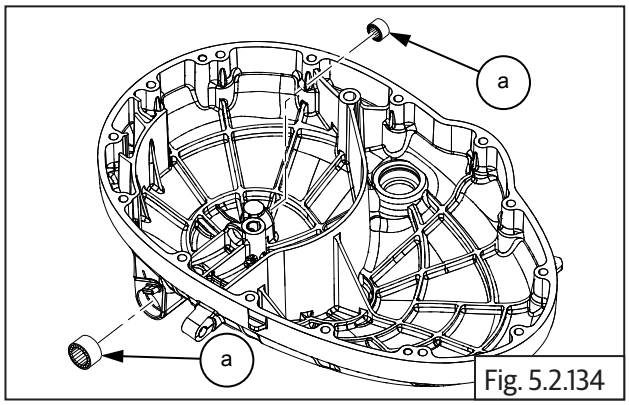

Fig. 5.2.134

SPL 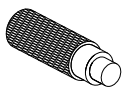	Part No: ST30262/a
	Part Name: Clutch act lever top BRG Inst

SPL 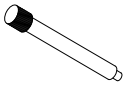	Part No: ST30261/a
	Part Name: Clutch act lever btm BRG Inst

- Insert clutch actuating shaft **(a)** into clutch cover **(b)** with the gear facing inside and the splines facing outside.

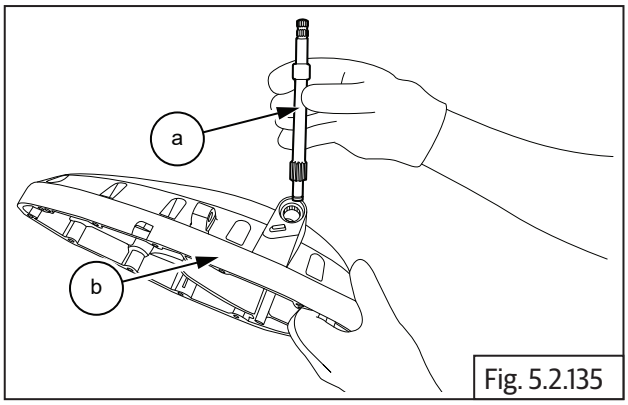

Fig. 5.2.135

- Assemble washer **(b)** on the shaft bottom inside the clutch cover.
- Assemble E-clip **(a)** in the slot in shaft bottom inside clutch cover.

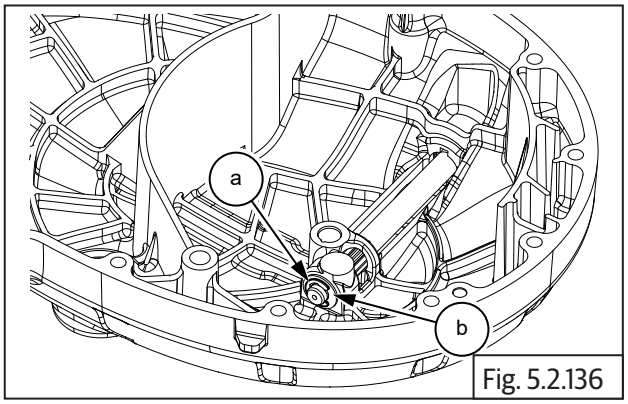

Fig. 5.2.136

	Nose plier

- Assemble oil seal **(a)** in clutch cover at the top with the lips facing down.
- Assemble washer **(b)** above oil seal.

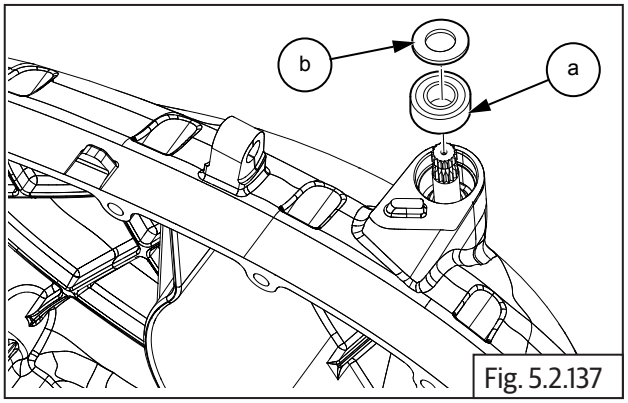

Fig. 5.2.137

5.2.42. Clutch Cover

- Ensure the dowel pins **(a)** are seated properly on the upper and lower crankcases on RH side.

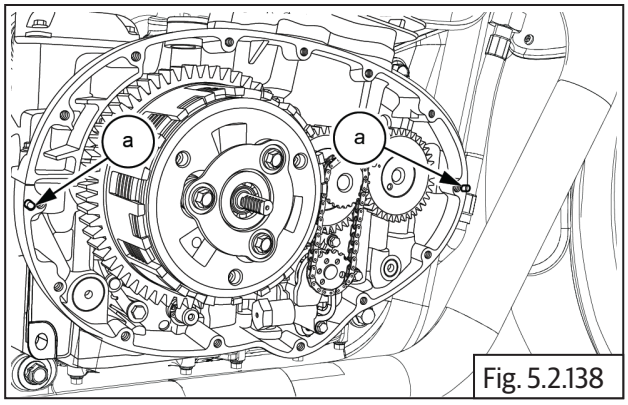

Fig. 5.2.138

NOTE
• *Apply Loctite 5910 over the dowel pins* **(a)**

- Install gasket **(a)** on the crankcase if necessary smear engine oil and ensure it is properly seated on dowels. **Do not use any sealant OR adhesive**.

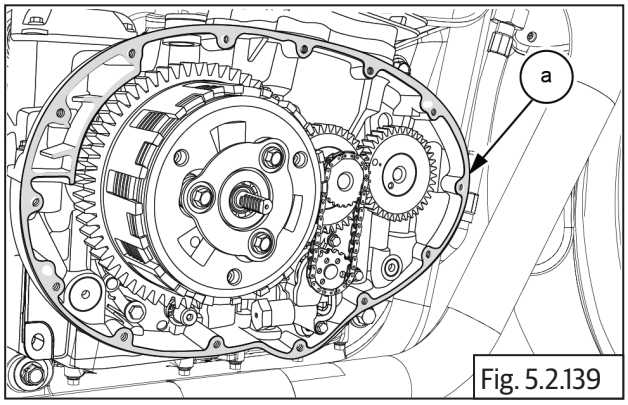

Fig. 5.2.139

- Ensure racks on the clutch pull rod is facing towards the rear of the engine.

- Hold the clutch cover **(a)** in position, rotate the clutch actuating shaft to ensure it is engaged correctly with the pull rod and gently tap cover inside, till it seats fully on the dowels and crankcase.

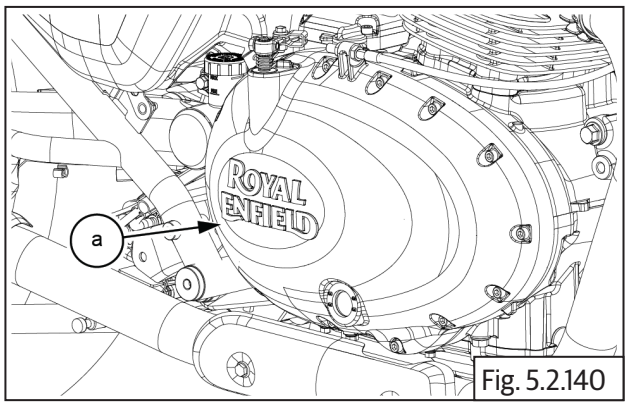

Fig. 5.2.140

- Locate 14 Nos. Hex socket bolts **(M6) (a)** on clutch cover and tighten them in crisscross pattern.

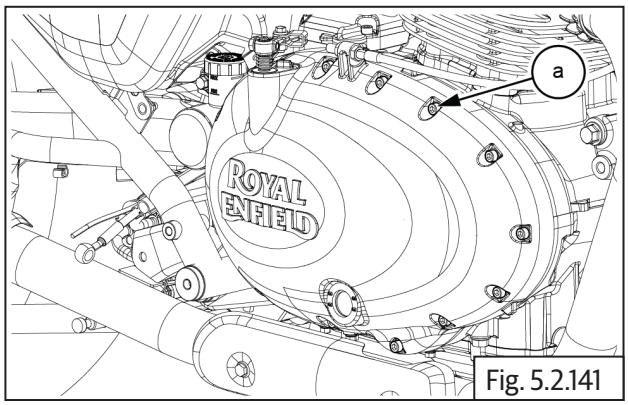

Fig. 5.2.141

	5 mm Allen socket with Ratchet

- Tighten bolts **(M6) (a)** evenly to specified torque.

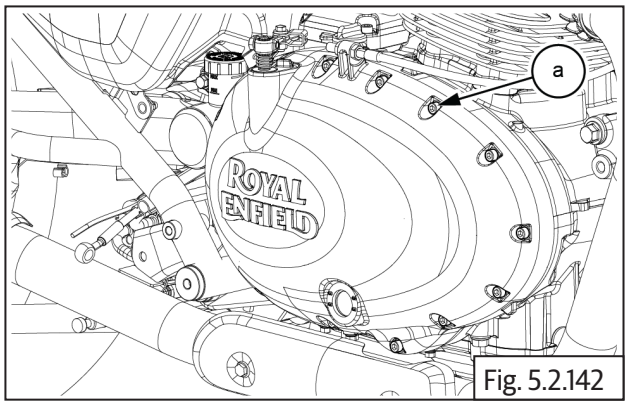

Fig. 5.2.142

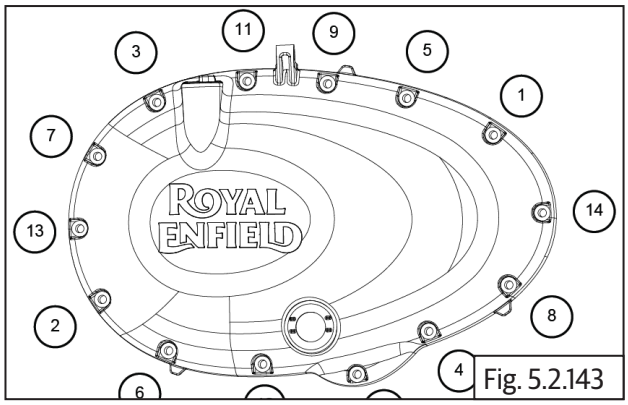

Fig. 5.2.143

	5 mm Allen socket with Torque wrench
Torque	10-12 N-m/1.0-1.2 kgf-m

5.2.43. Arm Clutch Actuating Lever

- Assemble clutch release spring **(a)** on shaft with the "L" bend positioned against the lug **(b)** in clutch cover.

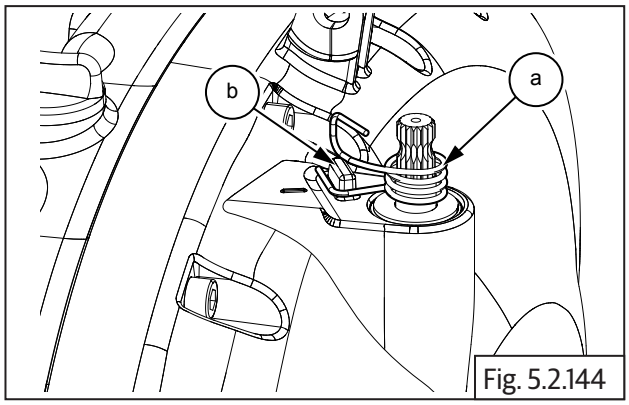

Fig. 5.2.144

- Rotate clutch shaft **(b)** clockwise till it stops.
- Ensure pinch bolt is sufficiently loose, position actuating lever on shaft at 11 'O' clock position and ensure the inner side of the lever is aligned to the reference mark **(a)** on the clutch cover.

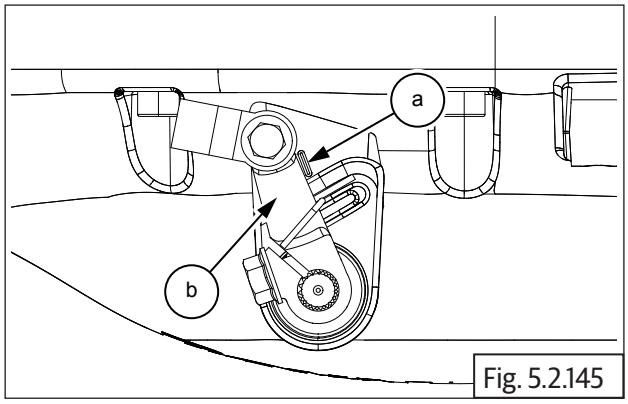

Fig. 5.2.145

- Tighten pinch bolt sufficiently such that the lever is firmly clamped on the shaft.
- Position the upper leg of the spring against the inside of the lever and check for proper spring action.

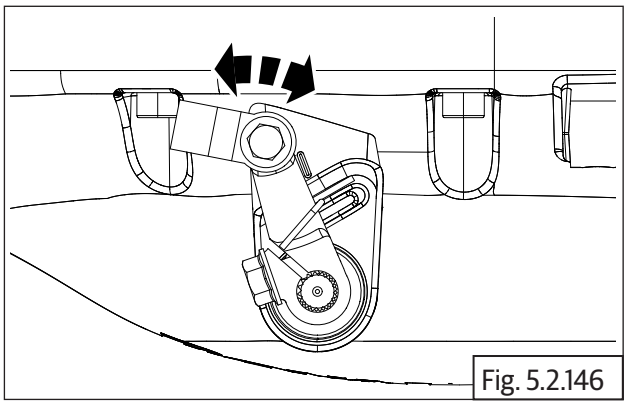
Fig. 5.2.146

5.2.44. Clutch Cable on Clutch cover

- Assemble clutch cable assembly **(a)** on clutch lever **(b)**. Refer clutch cable assembly procedure.

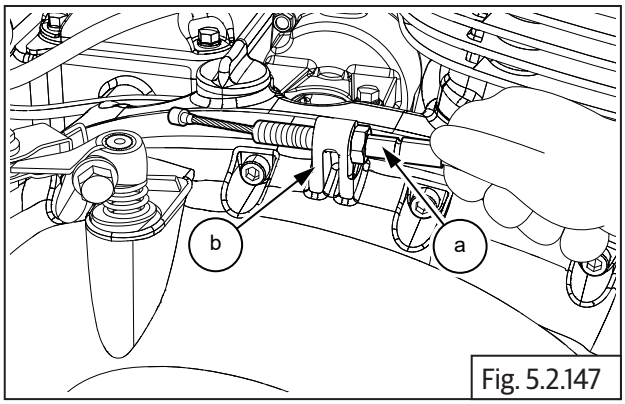

Fig. 5.2.147

5.2.45. FD Sprocket

- Assemble spacer **(a)** on drive shaft **(b)** on the LH side.

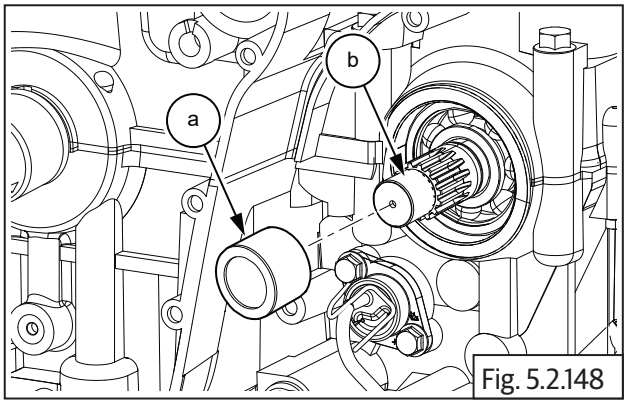

Fig. 5.2.148

- Locate oil seal **(a)** on the crankcase on LH side with its open end facing inwards and tap it in gently till the outer surface of the oil seal is flush with the crankcase **(b)**.

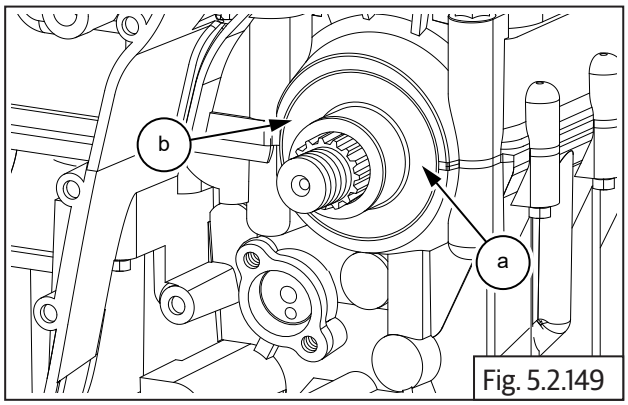

Fig. 5.2.149

- Assemble FD sprocket **(a)** on drive shaft **(b)**.

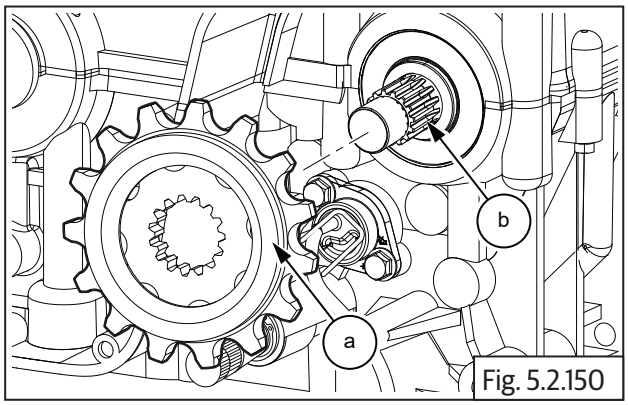

Fig. 5.2.150

- Install new tab washer **(a)** on drive shaft **(b)**.

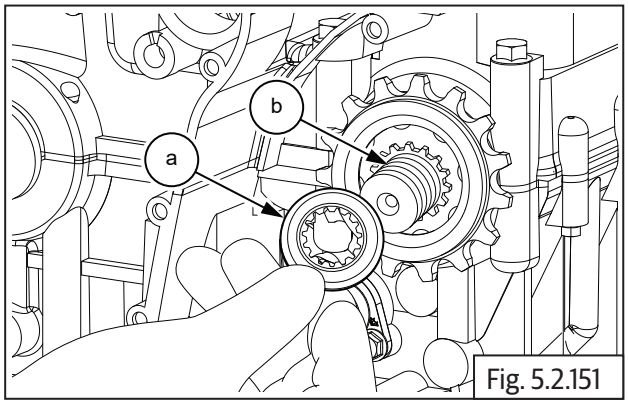

Fig. 5.2.151

- Assemble FD Sprocket "U" nut **(M20) (a)** on drive shaft.

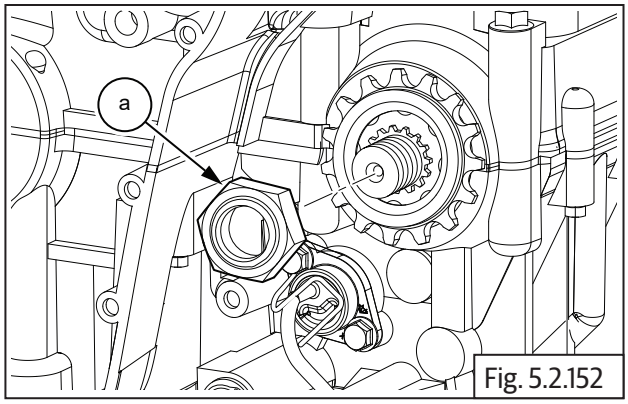

Fig. 5.2.152

- Locate special tool **(a)** over FD sprocket and tighten nut to specified torque.

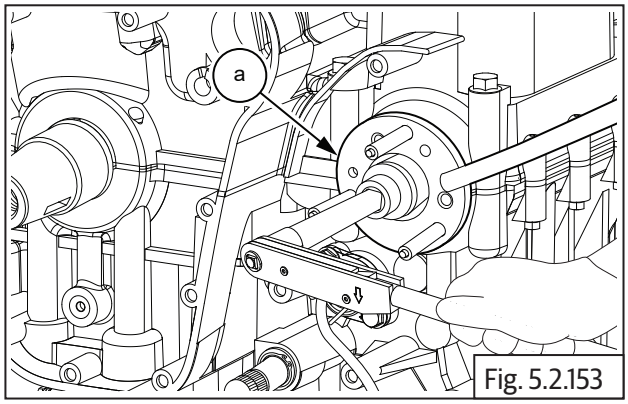

Fig. 5.2.153

SPL 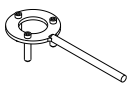	Part No: ST-27534-2
	Part Name: FD Sprocket holder

	30 mm Socket with Torque wrench
Torque	130-160 N-m/13.0-16.0 kgf-m

- Gently bend the tab washer **(a)** outer, to seat against a flat surface of the hex nut **(b)** with a flat chisel to prevent the nut from loosening during use.

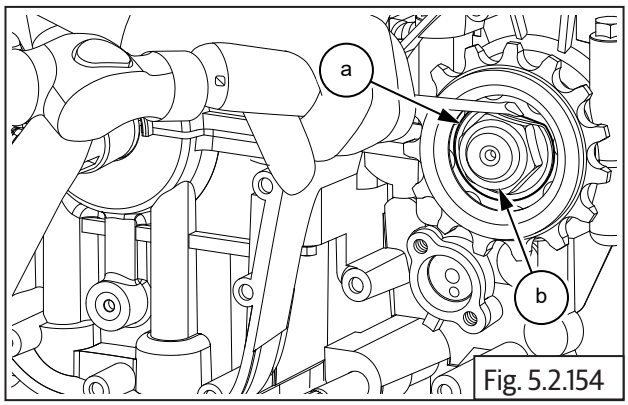

Fig. 5.2.154

	Chisel and Hammer

5.2.46. Rear Chain to FD Sprocket

- Locate drive chain **(a)** over the FD sprocket teeth **(b)**.

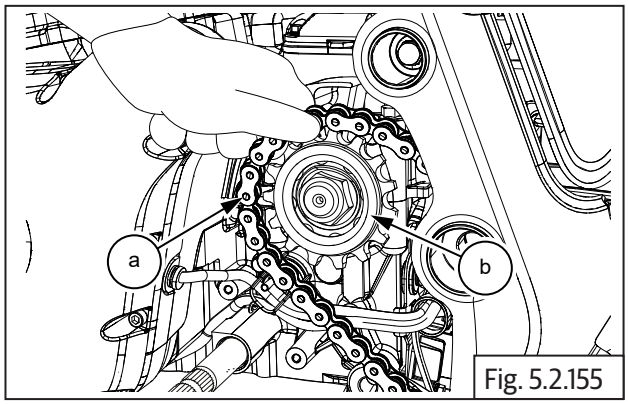

Fig. 5.2.155

- Ensure rear chain is properly seated on the rear wheel sprocket.
- Adjust rear chain tension as specified.
- On a point half-way along the chain run between the sprockets the maximum displacement (shown as A below) is measured. This value should be in the range of 20-30 mm.

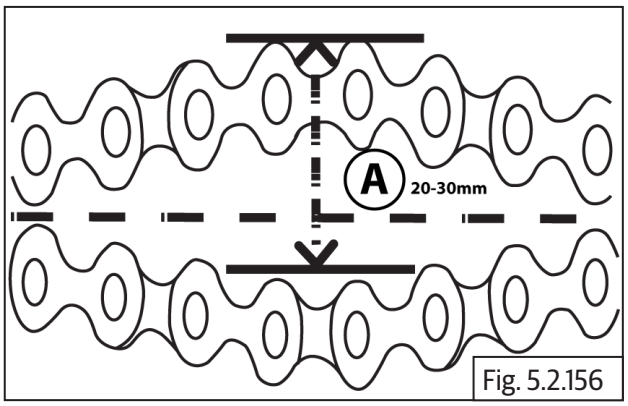

Fig. 5.2.156

- Inspect chain free play at 3 locations using a ruler. Free play for drive chain **(a)** should be between 20 mm to 30 mm.

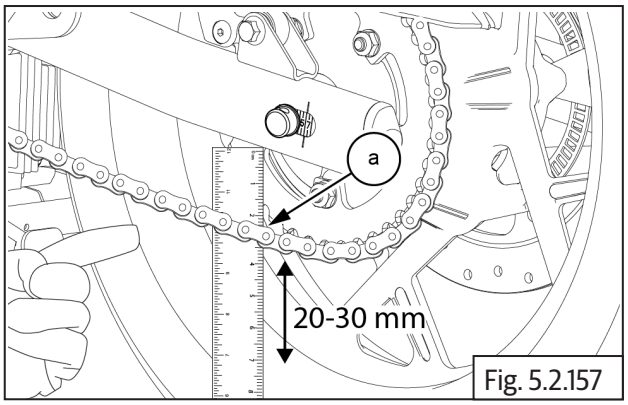

Fig. 5.2.157

5.2.47. Gear Position Sensor (GPS)

- Assemble the gasket **(c)** the Gear Position Sensor.
- Assemble gear position sensor on the LH side of lower crankcase duly ensuring the lug **(a)** in the GPS is located into the hole **(b)** in gear selector drum.

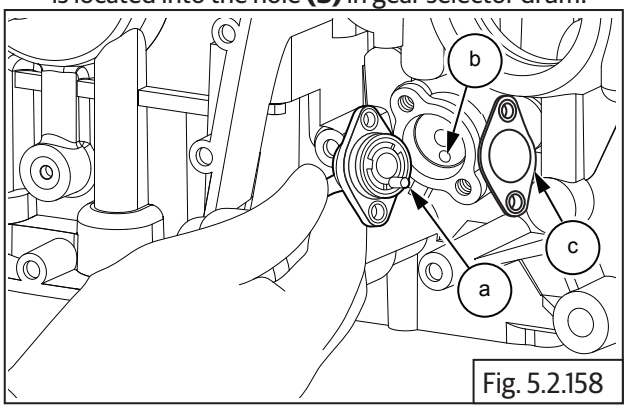

Fig. 5.2.158

NOTE
• *Replace Gasket whenever removed.*

- Position cable holder **(a)** over the GPS.

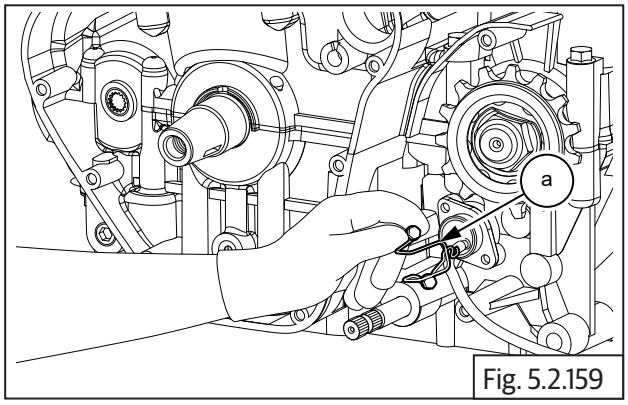

Fig. 5.2.159

- Assemble 2 nos Hex flange head bolts **(M6) (a)** on the cable holder and tighten cable holder and GPS to the crankcase on the LH side to specified torque.

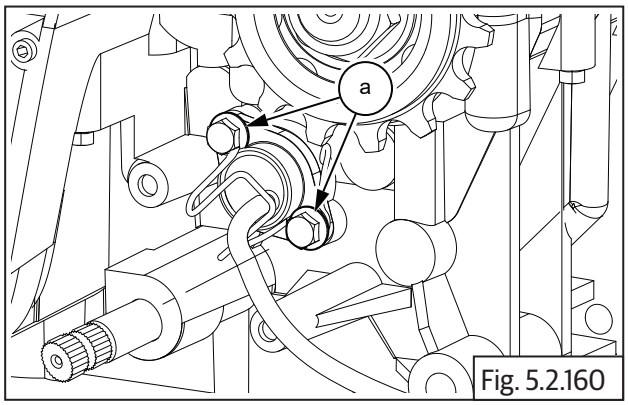

Fig. 5.2.160

	10 mm Socket with Torque wrench
Torque	10-12 N-m/1.0-1.2 kgf-m

5.2.48. Magneto Cover Sub Assembly

Stator coil with CPS in magneto cover

- Position stator coil **(a)** inside magneto cover such that
  - The crank position sensor (CPS) is seated at its mounting location.
  - Magneto wires and grommet **(c)** are aligned to the slot on the top of the cover.
  - The stator mounting holes are aligned to the mounting holes in magneto cover.
- Locate 3 Nos. Hex socket head bolts **(M6) (b)** in the stator coil mounting holes and tighten evenly to specified torque.

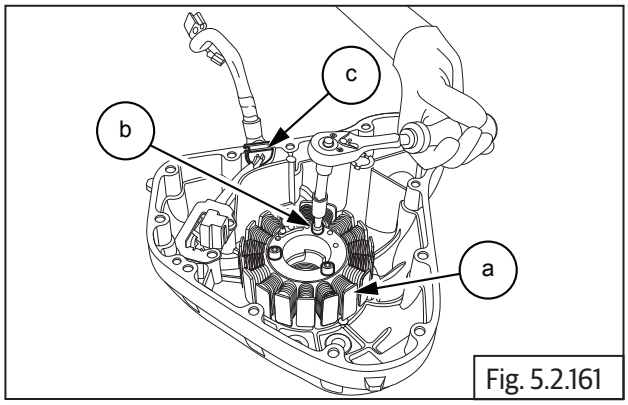

Fig. 5.2.161

	5 mm Allen socket with Ratchet and Torque wrench
Torque	10-12 N-m/1.0-1.2 kgf-m

NOTE
• *Apply Loctite 5910 on the gromet assemby* ***(c)*** *before installation*

- Locate guide plate **(b)** over the CPS **(a)**, ensure the mounting holes of the guide plate, CPS are aligned to the mounting holes in magneto cover.
- Locate 2 Nos. Hex socket head screws **(M5) (c)** on the guide plate and tighten evenly to specified torque.

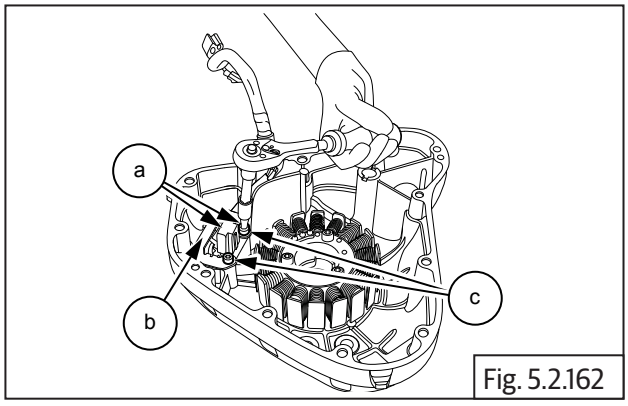

Fig. 5.2.162

	4 mm Allen socket with Ratchet and Torque wrench
Torque	10-12 N-m/1.0-1.2 kgf-m

5.2.49. Magneto Cover on Crankcase

- Locate dowel pins **(a)** into crankcase.

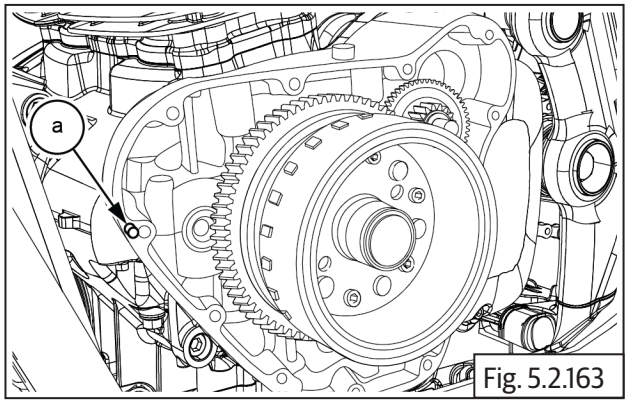

Fig. 5.2.163

- Install Gasket **(b)**.

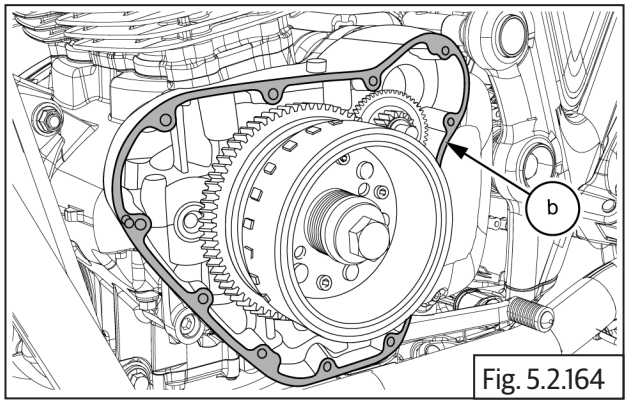

Fig. 5.2.164

NOTE
• *Apply Loctite 5910 in the marked location* **(b)**.

- Locate magneto cover on the crankcase on LH side and ensure it is properly and fully seated.

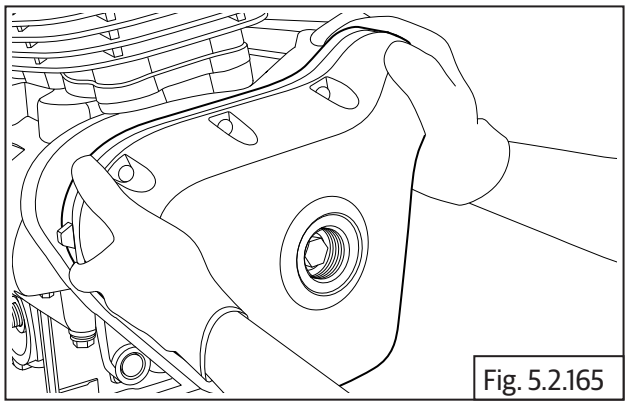
Fig. 5.2.165

⚠ **CAUTION**
Magnetic forces from the rotor may cause the cover to seat misaligned against crankcase. **Please ensure proper seating of the cover on the crankcase.**

- Locate 12 Nos. Hex socket bolts **(M6)** on magneto cover LH cover and tighten in a crisscross pattern evenly and to specified torque.

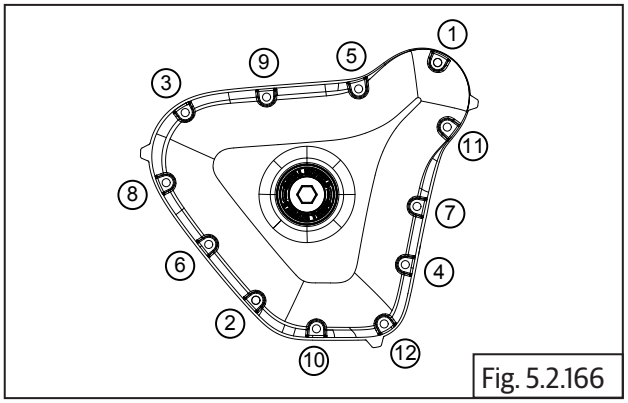

Fig. 5.2.166

- Locate O-ring **(a)** on crankshaft hole plug **(b)**.

NOTE
• *Replace the O ring with a new one whenever removed.* **DO NOT** *reuse.*

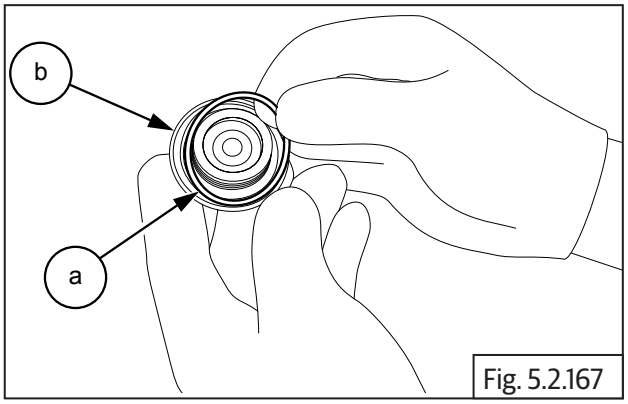

Fig. 5.2.167

- Locate crankshaft hole plug **(M34) (a)** on center of magneto cover and tighten to specified torque.

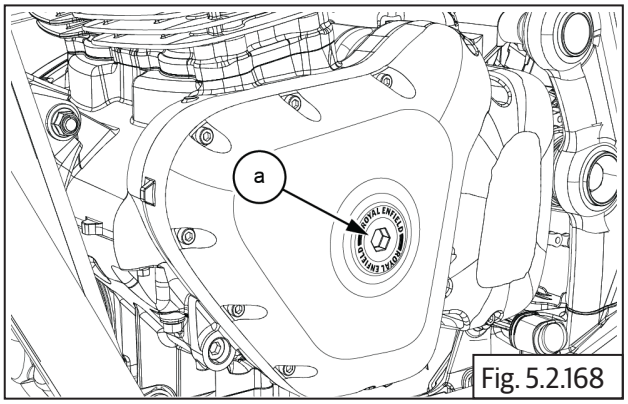

Fig. 5.2.168

	14 mm Allen socket with Ratchet and Torque wrench
Torque	20-22 N-m/2.0-2.2 kgf-m

5.2.50. Magneto / Gear position switch wiring couplers

- Connect the magneto and gear position switch wiring couplers **(a)** to the wiring harness on the rear side of crankcase **(b)**.

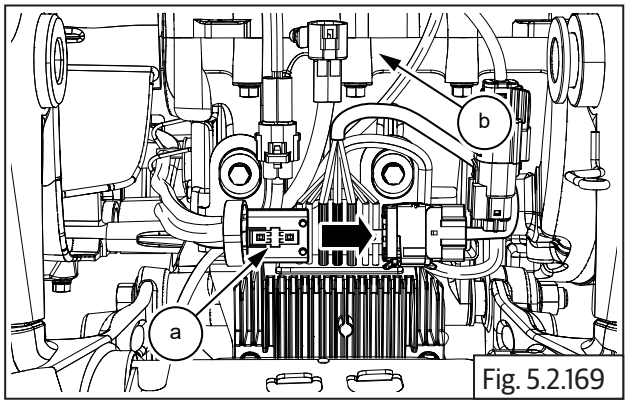

Fig. 5.2.169

5.2.51. FD Sprocket Cover

- Assemble FD sprocket cover **(b)** on crankcase LH.
- Locate 3 Nos. Hex socket head bolts **(M6) (a)** on FD sprocket cover and tighten in a crisscross pattern to specified torque.

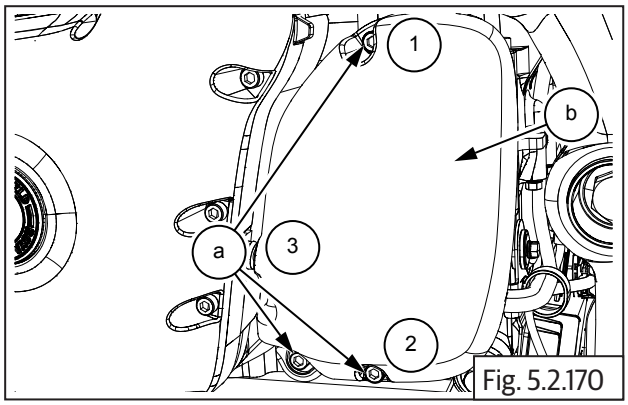

Fig. 5.2.170

	5 mm Allen Socket with Ratchet and Torque wrench
Torque	10-12 N-m/1.0-1.2 kgf-m

5.2.52. Gear Shift Linkage

- Locate gear shift linkage **(a)** into LH control plate and knuckle.

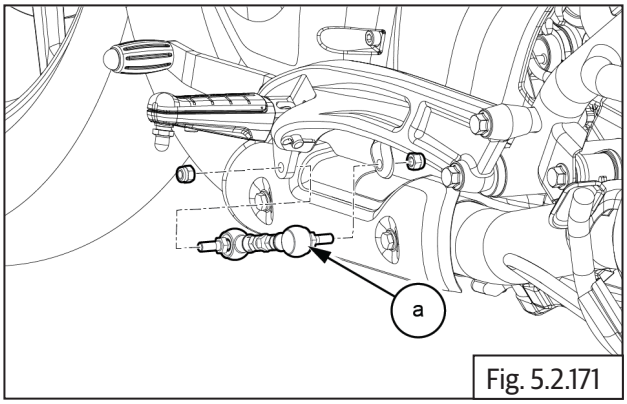

Fig. 5.2.171

- Locate and tighten 2 Nos hex nut **(a) (M6)** into gear shift linkage.

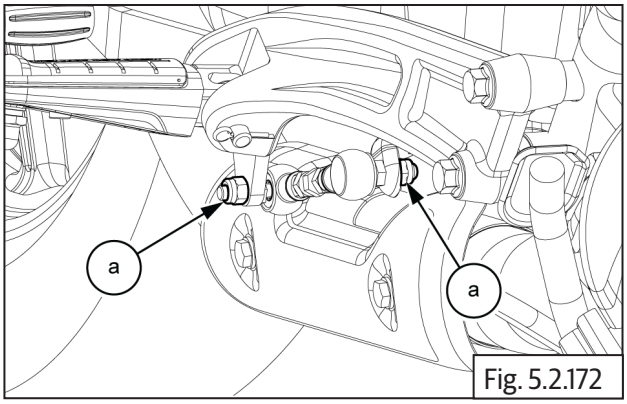

Fig. 5.2.172

	10 mm Socket with Ratchet
Torque	10 N-m / 1.0 kgf-m

5.2.53. Starter Motor

NOTE
• *Do not tap on the starter motor. It may damage the internal parts.* • *Inspect the starter drive shaft teeth for any wear-out OR damages.* • *Replace the O Ring when removed. Do not reuse.* • *Apply Loctite Silicon Lube in O Ring before Installation* • *Apply Loctite 243 manually on the threads of the starter motor bolts before installation.*

- Locate starter motor **(a)** into the housing **(b)** on upper crankcase LH.

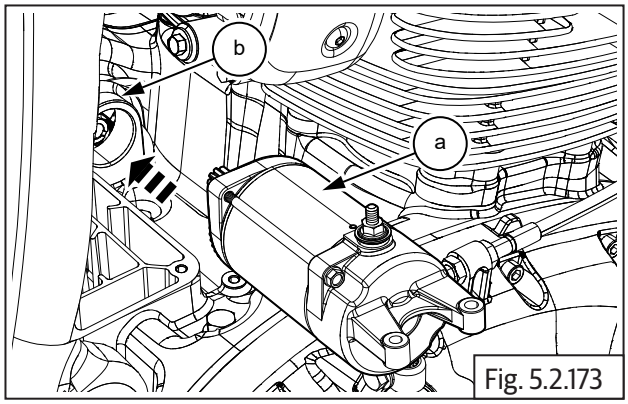

Fig. 5.2.173

- Position negative (-ve) cable **(a)** eyelet over starter motor rear mounting hole and locate 1 No. Hex head flange bolt **(M6) (b) sufficiently.**
- Tighten both bolts to specified torque.

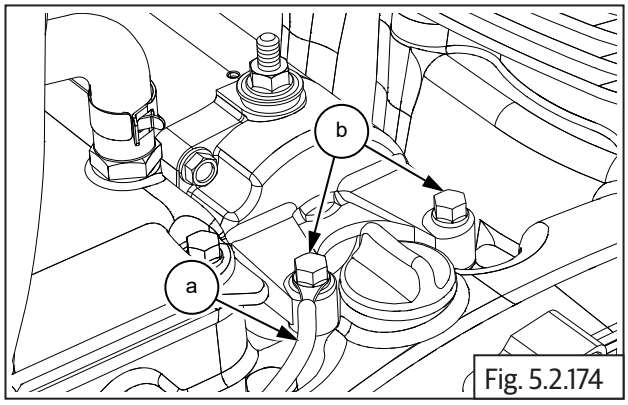

Fig. 5.2.174

	8 mm Socket with Ratchet and Torque wrench
Torque	10 N-m/1 kgf-m

5.2.54. Starter Motor Connections

- Connect starter motor positive (+ve) cable **(a)** to starter motor terminal and tighten with Hex nut **(M6) (b)** firmly such that the terminal is not loose. **DO NOT OVERTIGHTEN.**
- Slide protective cap over terminal on starter motor **(c)**.

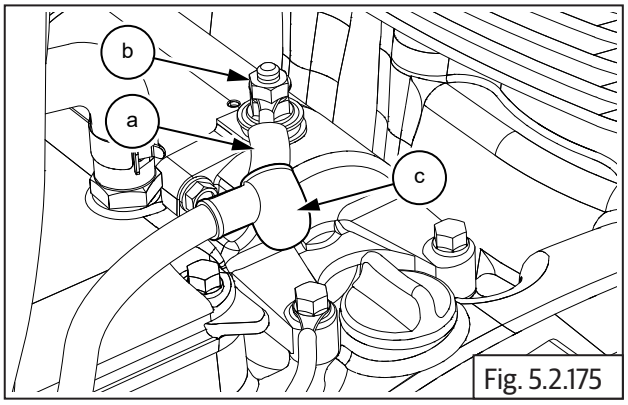

Fig. 5.2.175

	10 mm Double end spanner

5.2.55. Breather Box

- Locate new gasket **(a)** on breather box cover **(b)** and assemble breather box cover on engine.

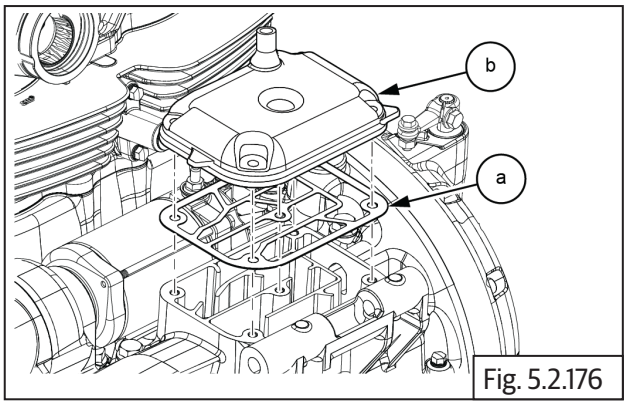

Fig. 5.2.176

- Install and tighten 5 Nos. Hex-head flange bolts **(M6) (a)** to specified torque.

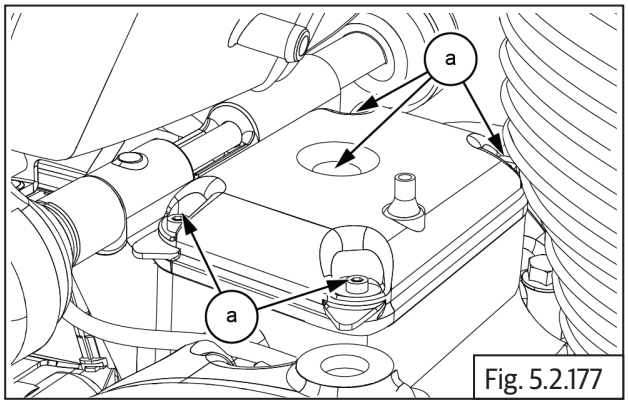

Fig. 5.2.177

	10 mm Socket with Ratchet and Torque wrench
Torque	10-12 N-m/1.0-1.2 kgf-m

5.2.56. Breather Hose Connections

- Insert the shorter end of hose **(b)** on the tube in breather box **(c)**.
- Position the clip **(a)** on hose correctly.

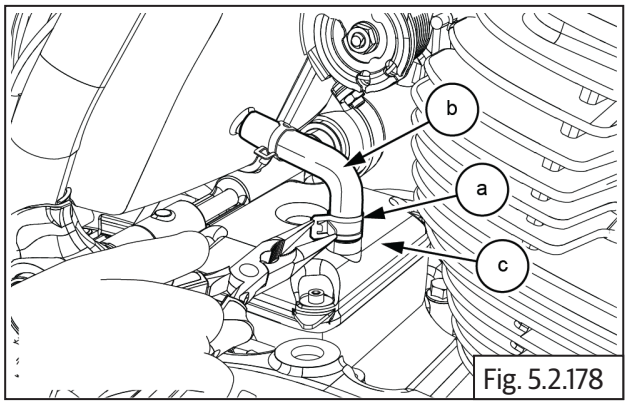

Fig. 5.2.178

	Nose plier

- Locate the other end of hose **(b)** on the tube in air filter box **(c)** and position the clip **(a)** over the breather hose correctly.

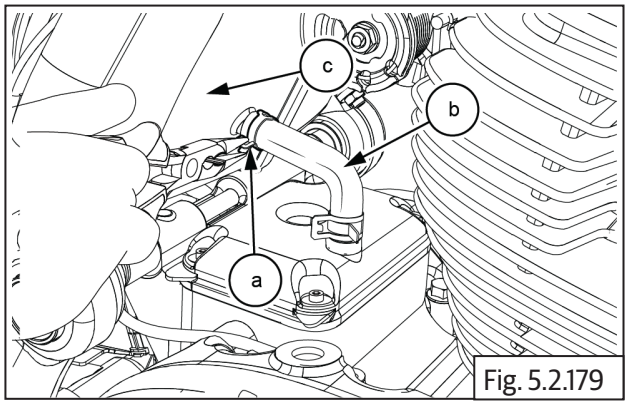

Fig. 5.2.179

	Nose plier

5.2.57. Engine Oil Filling

NOTE
• *Fill engine oil to the recommended level.*

⚠ CAUTION
Do not over fill engine oil has it will lead to oil coming into breather box, possible smoke through exhaust AND/OR oil leaks from joint faces.
Do not under fill engine oil as it will cause excessive heat, increased engine noise, starvation of lubrication AND/OR engine seizure.

- Fill recommended engine oil till the level is between the "Max and Min" marks on the oil level window on clutch cover.

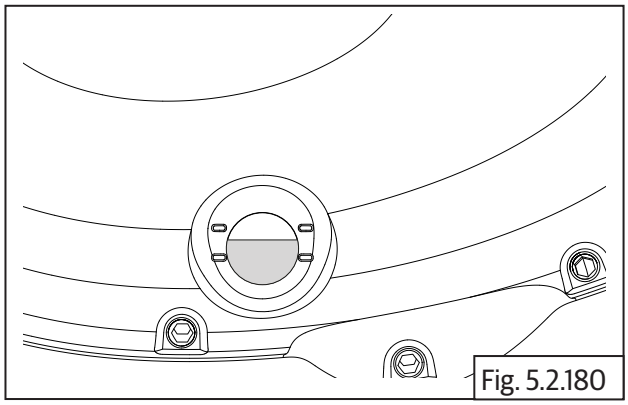

Fig. 5.2.180

Dry Fill	3.9 Liters / 1.03 Imperial gallon
Grade	TOTAL ELF MOTO 4 TECH SAE 10W50 APISL, JASO MA2, SYNTHETIC

- Assemble oil filler cap **(a)** on the filler hole on the crankcase top on RH side and tighten just sufficiently.
- Use an adjustable plier with soft jaws. **DO NOT OVERTIGHTEN.**

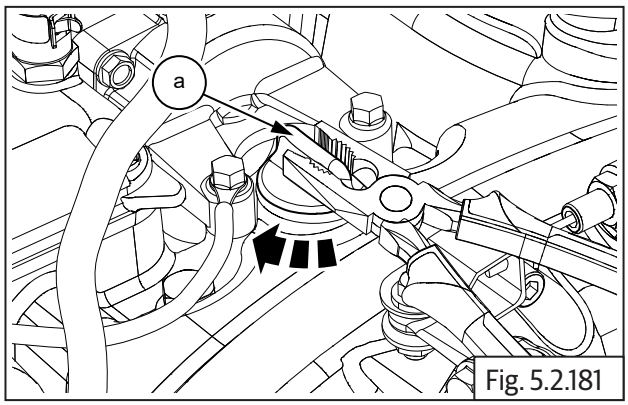

Fig. 5.2.181

	Adjustable plier with Soft jaws

ENGINE REMOVAL FROM FRAME

CONTENTS PAGE

5.3 Engine Removal from Main Frame..... 137

5.3.1. Engine Oil..... 137

5.3.2. Oil Cooler Inlet and Outlet Pipes..... 137

5.3.3. Oil Cooler Mountings on Frame..... 138

5.3.4. Oil Filter..... 138

5.3.5. Side Panel RH..... 139

5.3.6. Pillion Seat..... 139

5.3.6. Rider Seat..... 140

5.3.7. Side Panel LH..... 141

5.3.8. Battery Connections..... 141

5.3.9. Clutch Cable..... 142

5.3.10. Fuel Pump Connector and Fuel Level Sensor..... 144

5.3.11. Fuel Hose (Fuel Pump to Injector)..... 144

5.3.12. EVAP Connections on Fuel Tank..... 144

5.3.13. Drain Hose..... 144

5.3.14. Throttle Body Covers on LH and RH..... 145

5.3.15. Throttle Cable..... 145

5.3.16. Injector, TPS, MAPS, ISC Connections..... 146

5.3.17. Air Filter Housing to Throttle Body..... 146

5.3.18. Throttle Body..... 146

5.3.19. Hego/Oxygen Sensor Connectors..... 147

5.3.20. Silencer / Muffler..... 147

5.3.21. Exhaust Header Pipe..... 149

5.3.22. Magneto/Gear Position/Side Stand..... 150

5.3.23. Starter Motor Connection..... 150

CONTENTS **PAGE**

5.3.24. Spark Plug Suppressor Caps on LH 151

5.3.25. Breather Hose Connection 151

5.3.26. Gear Shift Linkage - Control Plate (LHS) 151

5.3.27. Control Plate (RHS) 152

5.3.28. FD Sprocket Cover 154

5.3.29. Rear Wheel (Increasing chain slack) 154

5.3.30. Remove Rear Chain from FD Sprocket 155

5.3.31. Gear Position Indicator Sensor 155

5.3.32. Engine Steady Bracket 155

5.3.33. Engine Cylinder Head Steady Bracket 156

5.3.34. Cradle Frame Top Mountings 156

5.3.35. Rear Frame Bottom Mountings 157

5.3.36. Rear Top Engine Mountings 157

5.3.37. Engine from Main Frame 158

Components dismantling sequence to remove engine from frame - flow chart

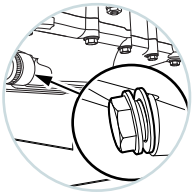

Drain engine oil

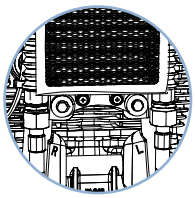

Oil cooler inlet and outlet pipes from engine

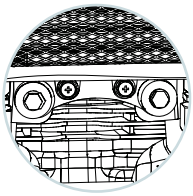

Oil cooler mountings from frame

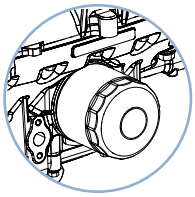

Oil filter



Side panel RH

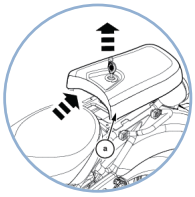

Seat assembly

C



Seat panel LH

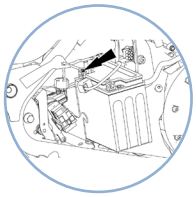

Battery connections

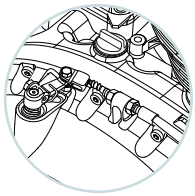

Clutch cable

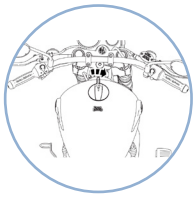

Fuel tank

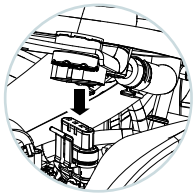

Fuel pump coupler and fuel level sensor coupler

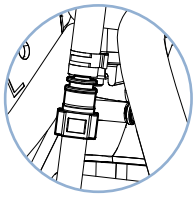

Fuel hose

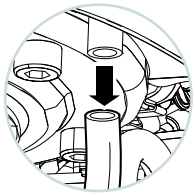

EVAP connection to tank

C

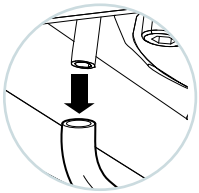

Drain hose

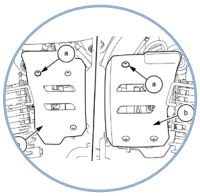

Throttle body covers LH and RH

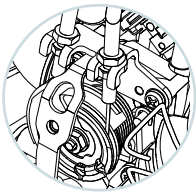

Throttle cable

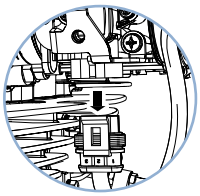

Throttle position sensor and injector coupler RH and LH

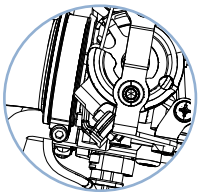

Air filter housing to throttle body connection

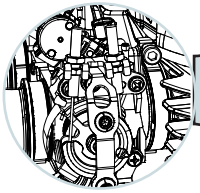

Throttle body

C

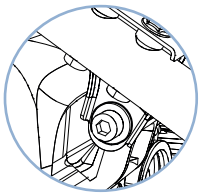

Engine steady bracket



Hego/Oxygen sensor connector

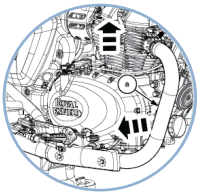

Exhaust pipe and silencer LH and RH

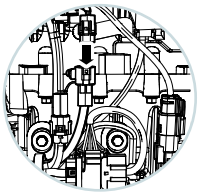

Magneto/Gear position/Side stand switch couplers connections

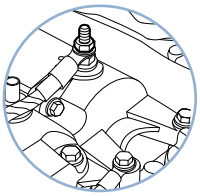

Starter motor connection

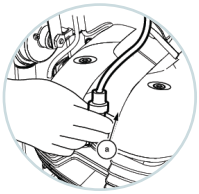

Spark plug suppressor caps on LH

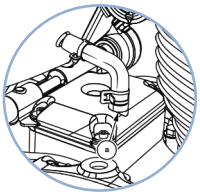

Breather hose connection from breather box to air filter box

C

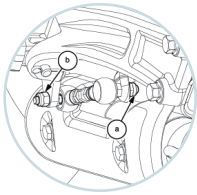

Gear shift linkage

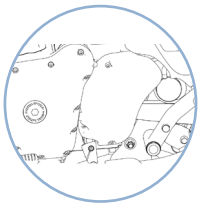

FD sprocket cover

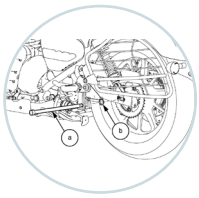

Rear wheel



Remove rear wheel chain from FD sprocket



Gear position sensor

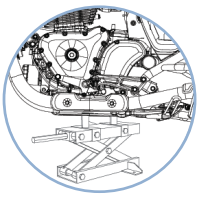

Cradle frame top mountings from main frame



Cradle frame bottom mountings from main frame

C



Top engine mounting from main frame



Lower bottom support

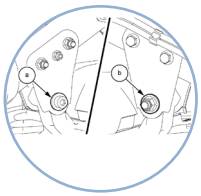

Upper support

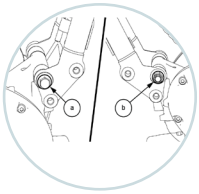

Four mounting studs of engine to cradle frame

5.3 Engine Removal from Main Frame

⚠ WARNING

The engine and exhaust system get extremely hot during normal operation and direct contact with skin can cause serious burns. Make sure engine is in normal temperature (OR) cooled before starting operation.

5.3.1. Engine Oil

NOTE

- *Ensure the motorcycle is placed on a firm flat surface, resting it on the center stand/ramp.*

- Before starting the dismantling process, start the engine and let the engine warm up for a few minutes and then turn it OFF.
- Remove engine oil filler cap **(a)**.

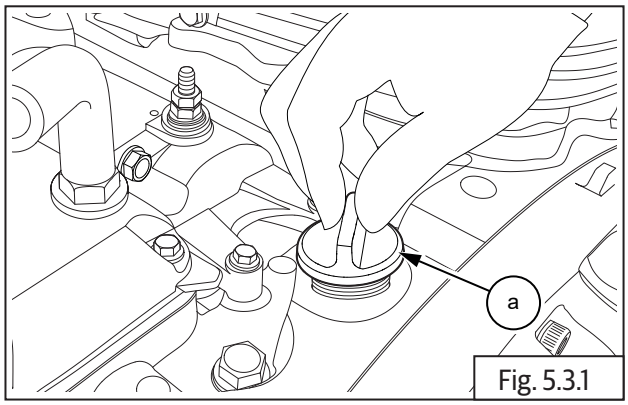

Fig. 5.3.1

- Place a tray (a) under engine oil magnetic drain plug (b). Remove it along with washer (c) to drain oil completely from engine..

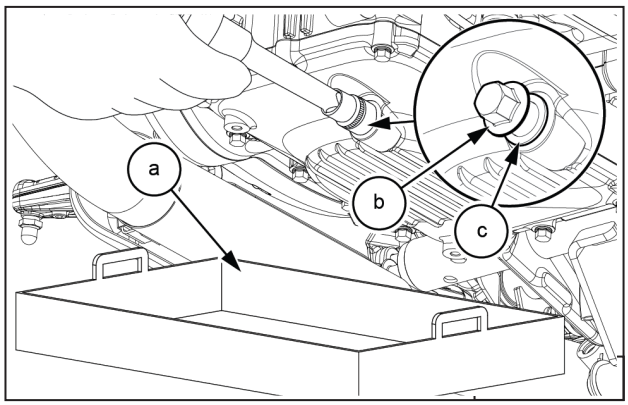

	13 mm Socket with Ratchet

5.3.2. Oil Cooler Inlet and Outlet Pipes

Oil cooler inlet and outlet pipes from engine

NOTE

- *Ensure the oil is fully drained and keep a container underneath the engine to avoid oil spilling on floor.*

- Support the top adapter **(M16) (a)** suitably and loosen the bottom Hex nut **(M18) (b)** located on oil cooler hose **(c)**.

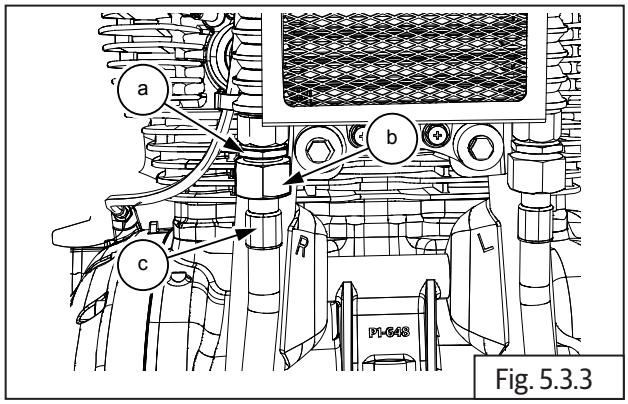

Fig. 5.3.3

	24 mm and 27 mm Double end spanner

- Loosen and remove 2 Nos. Hex socket screws **(M6) (a)** to disconnect oil cooler inlet pipe **(b)** from engine.

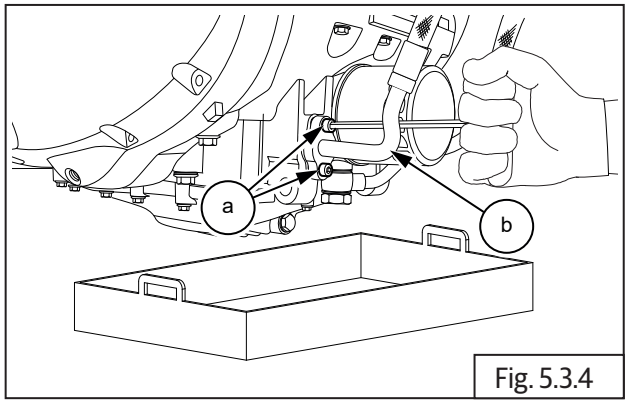

Fig. 5.3.4

	5 mm Allen Socket with Ratchet

- Loosen and remove bolt union crankcase **(M16) (a)** along with washer located below front bottom of engine.

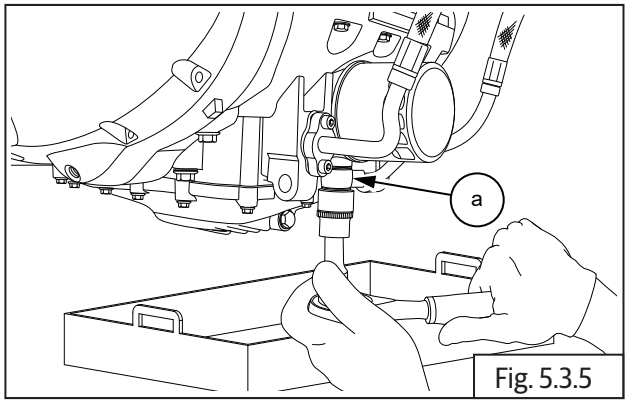

Fig. 5.3.5

	24 mm Socket with Ratchet

- Disconnect 2 Nos. inlet pipe lines one by one.

NOTE
• *Cover the pipe ends and cooler ends with suitably to avoid dust entry.*

5.3.3. Oil Cooler Mountings on Frame

- Loosen and remove 2 Nos. Hex flange head bolts **(M6) (a)** along with washers and nuts from oil cooler mounting frame **(b)**.
- Gently push cooler top mounting bush **(c)** downwards to remove cooler from frame.

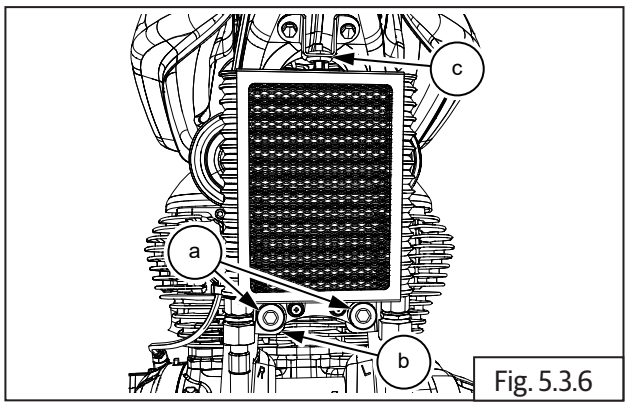

Fig. 5.3.6

	10 mm Socket with Ratchet

NOTE
• *Ensure to cover the cooler pipe ends suitably to avoid exposure to dust.*

⚠ CAUTION
Do not damage cooler fins. Carefully handle the cooler and place it in a safe location.

5.3.4. Oil Filter

- Place a tray under engine oil filter **(a)**.
- Loosen and remove using special tool **(b)** from the front bottom of engine **(c)**.

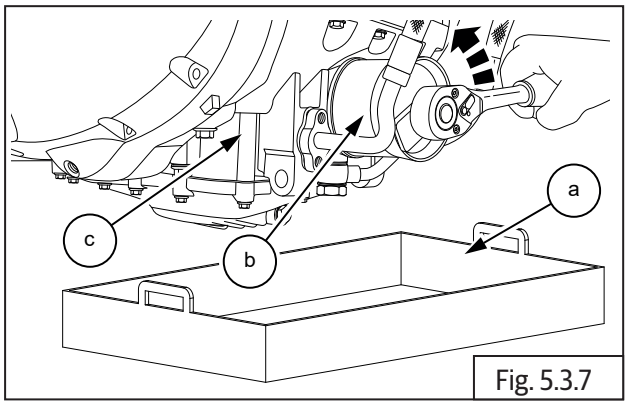

Fig. 5.3.7

SPL 	Part No: ST30294/a
	Part Name: Oil Filter wrench with Ratchet

5.3.5. Side Panel RH

- Loosen and remove flat head screws 2 nos **(M6) (a)** from RHS reservoir panel.

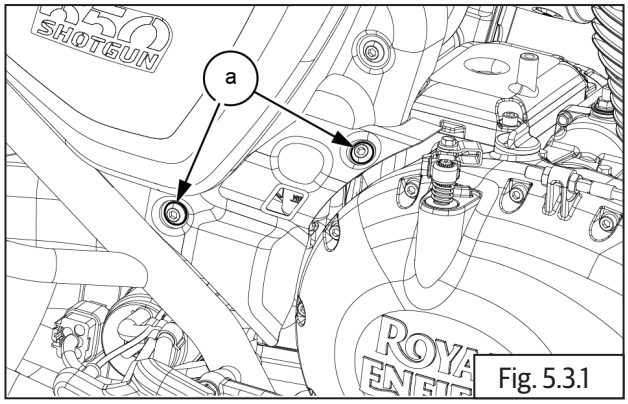

Fig. 5.3.1

	5 mm Allen Socket with Ratchet

- Remove the reservoir panel **(a)** from RHS side panel.

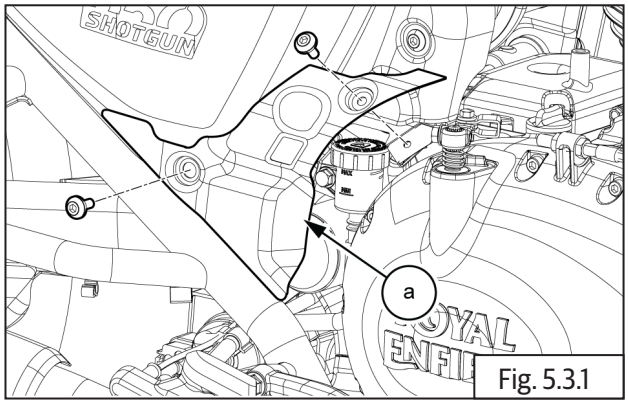

Fig. 5.3.1

- Gently Pull the RHS side panel **(a)** outside for opening the same.

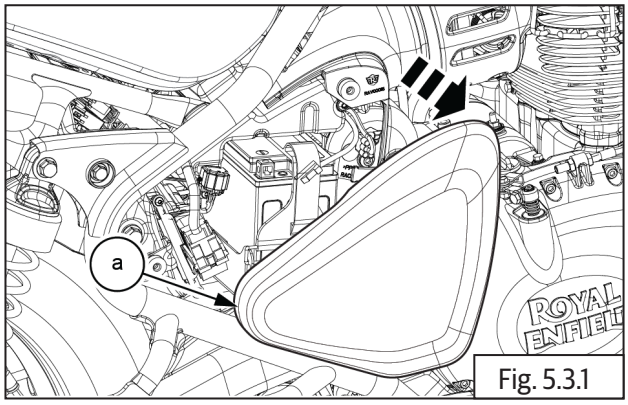

Fig. 5.3.1

5.3.6. Pillion Seat

- Insert ignition key **(a)** and turn it clockwise unlock the pillion seat.

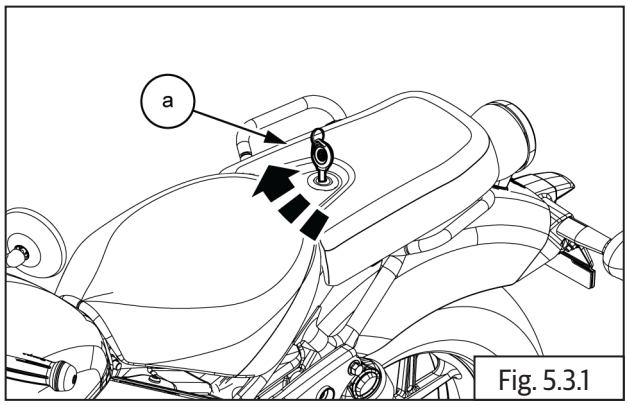

Fig. 5.3.1

	5 mm Allen Socket with Ratchet

- Lift the seat from front end and slide it towards front to remove pillion seat **(a).**

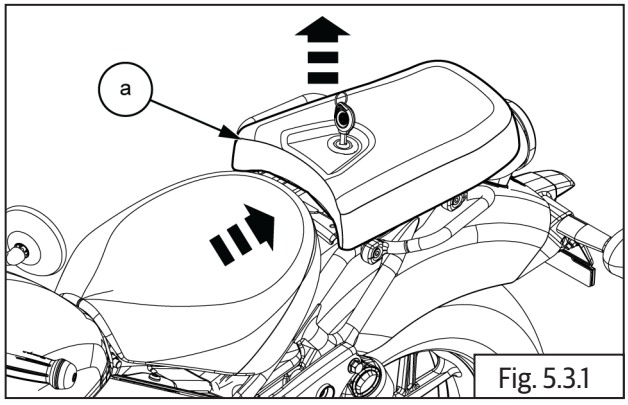

Fig. 5.3.1

NOTE
• *Place the seat in a safe location to prevent from scratches and dirt.*

5.3.6. Rider Seat

- Remove Hex flange bolts **(a)** with nuts **(b)** 2 nos from seat frame.

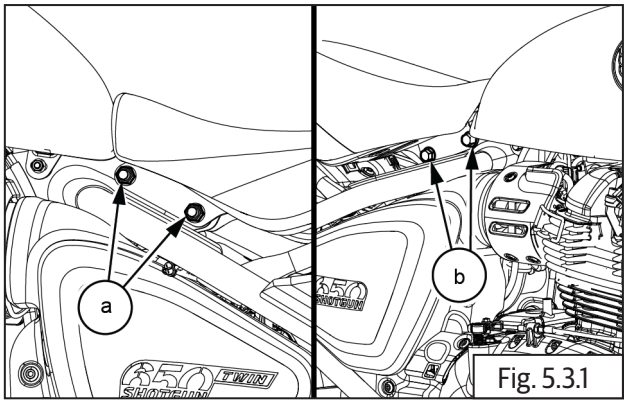

Fig. 5.3.1

	14 mm Hex Socket with Ratchet

- Lift the seat from rear end and slide it towards rear to remove rider seat **(a)** with bracket.

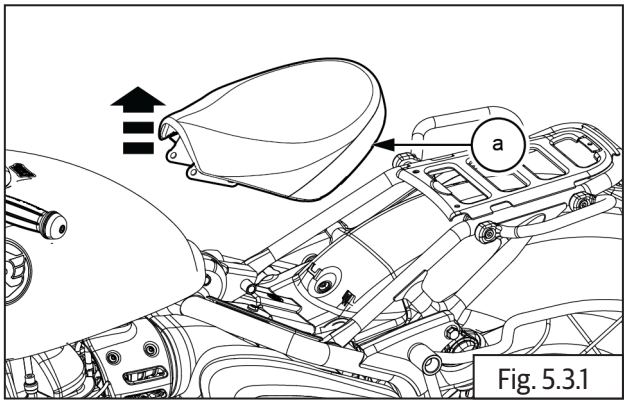

Fig. 5.3.1

NOTE
• *Place the seat in a safe location to prevent from scratches and dirt.*

5.3.7. Side Panel LH

- Insert ignition key **(a)** and turn it anticlockwise.

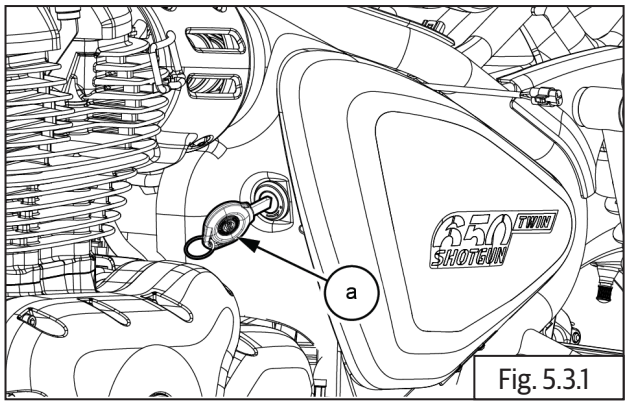

Fig. 5.3.1

- Gently Pull the LHS side panel **(a)** outside for opening the same.

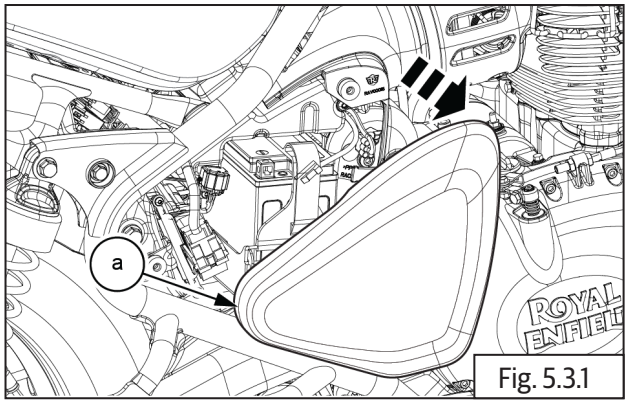

Fig. 5.3.1

5.3.8. Battery Connections

NOTE
• *Ensure ignition and stop switches are in OFF position before disconnecting battery cables.*

- Pull battery strap (belt) **(a)** downwards and release strap lock from battery strap bracket.

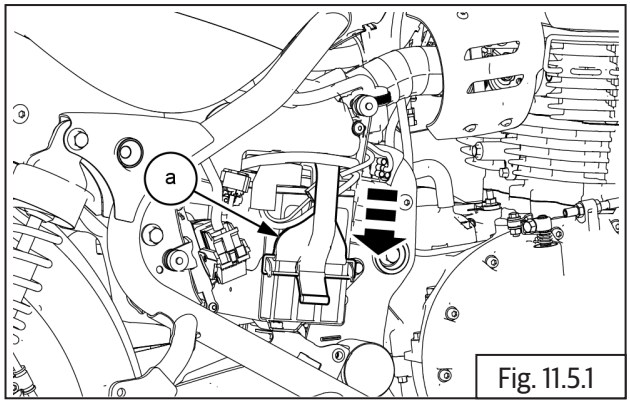

Fig. 11.5.1

- Disconnect the negative (- ve) coupler **(a)**.

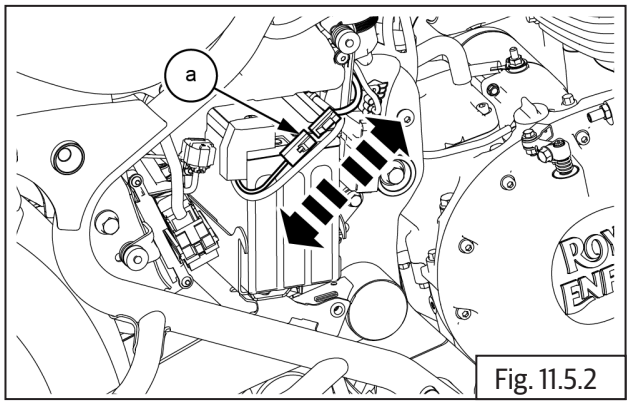

Fig. 11.5.2

	10 mm Double end spanner

- Disconnect battery negative (- ve) terminal bolt **(a)**.

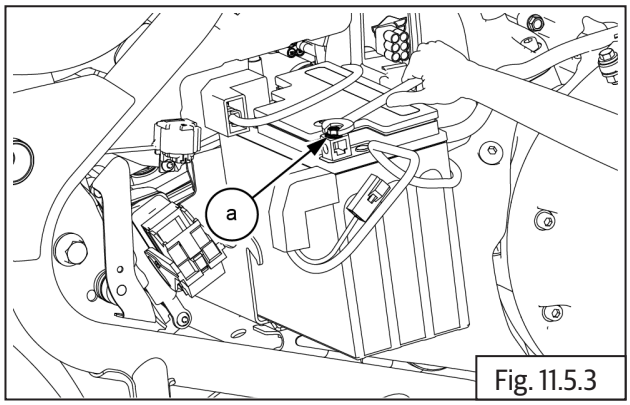

Fig. 11.5.3

	10 mm Double end spanner

- Slightly slide it outward the battery **(a)** for remove (+ ve) terminal bolt.

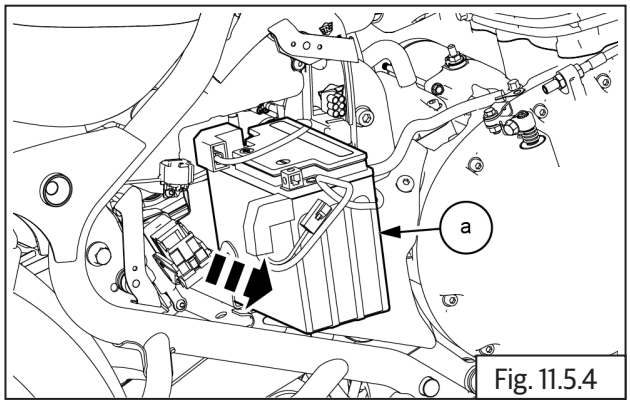

Fig. 11.5.4

- Disconnect battery positive (+ ve) terminal bolt **(a)**.

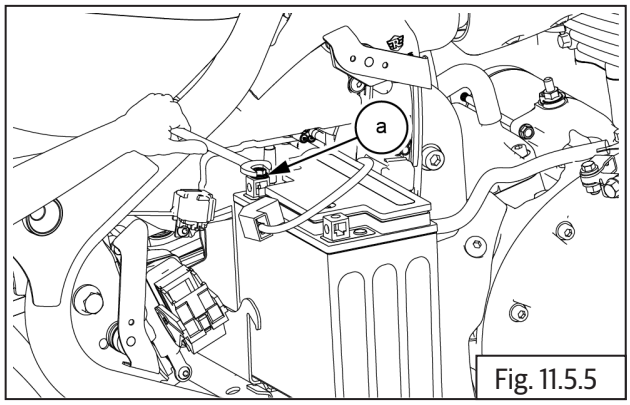

Fig. 11.5.5

	10 mm Double end spanner

- Remove battery **(a)** from tray.

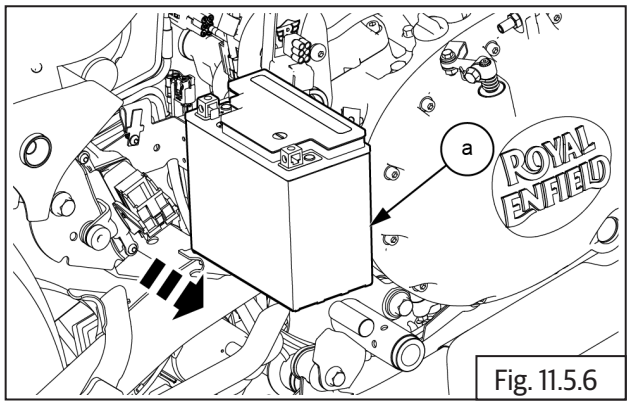

Fig. 11.5.6

5.3.9. Clutch Cable

- Disconnect the clutch cable from handlebar lever. Refer clutch lever dismantling.
- Locate clutch cable actuating assembly **(a)** on the clutch cover **(b)**.

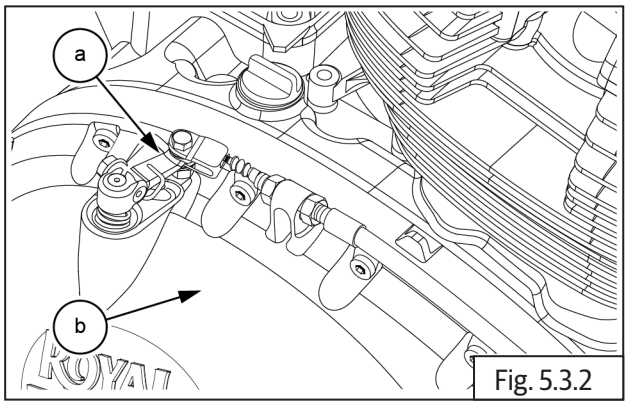

Fig. 5.3.2

- Loosen outer lock nut **(M8) (a)** from rear of cable adjuster **(b)**.

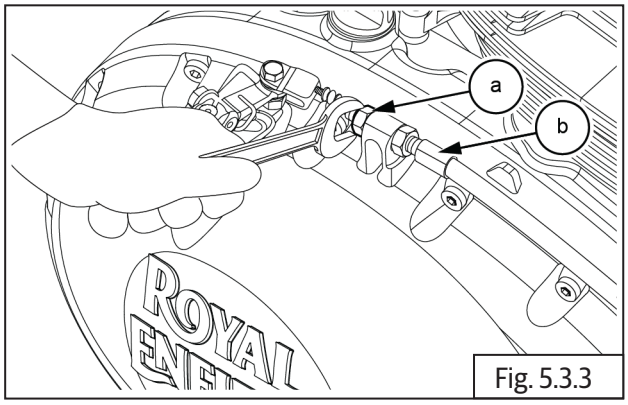

Fig. 5.3.3

- Loosen inner locknut **(M8) (a)** fully and pull adjuster from housing cable guide **(b)**.

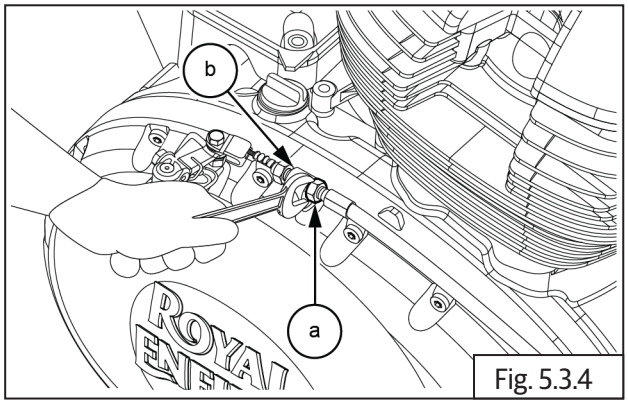

Fig. 5.3.4

	12 mm Double end spanner

- Release inner cable **(a)** from clevis on clutch actuating assembly **(b)**.

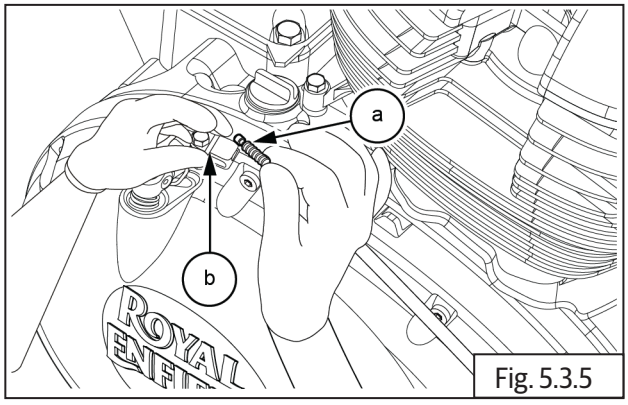

Fig. 5.3.5

- Remove rubber grommet **(a)**.

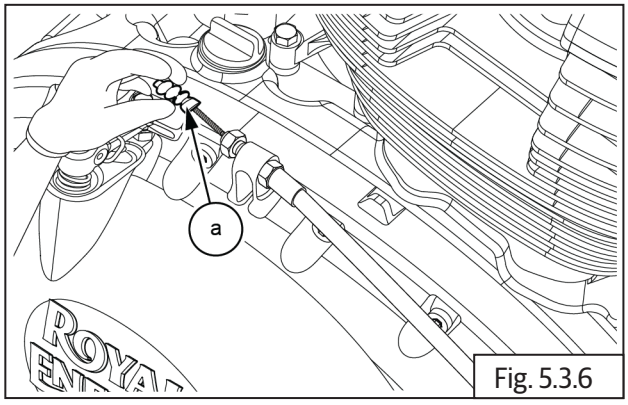

Fig. 5.3.6

- Remove outer lock nut **(a)**.

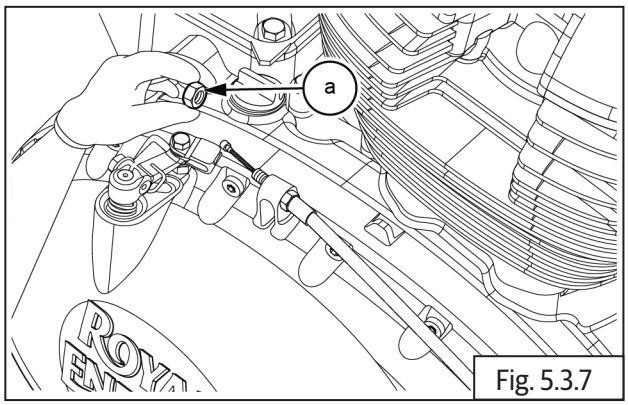

Fig. 5.3.7

- Remove clutch cable **(a)** from cable guide **(b)**.

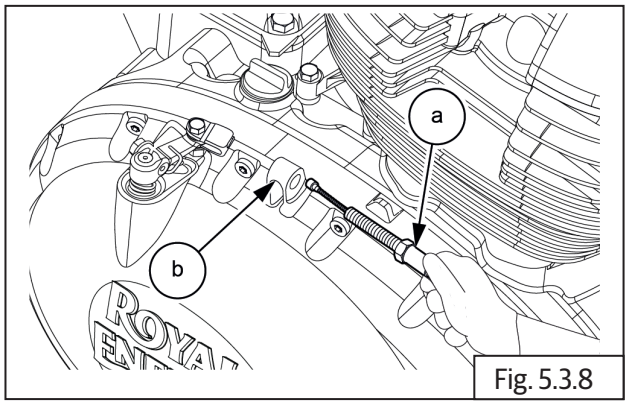

Fig. 5.3.8

- Loosen and remove 1 Nos. Hex head bolt and nut **(M6) (a)** from rear end of fuel tank on frame .

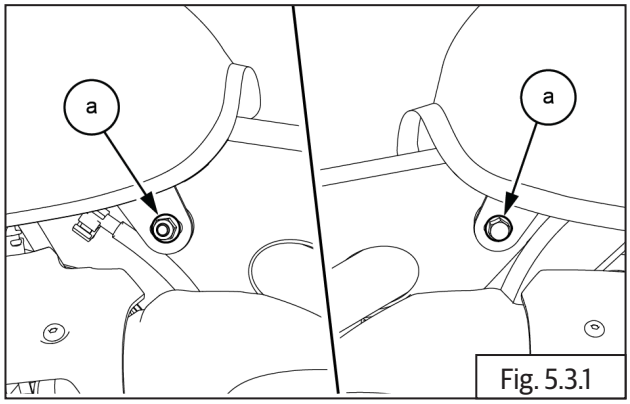

Fig. 5.3.1

	10 mm Socket with Ratchet

5.3.10. Fuel Pump Connector and Fuel Level Sensor

- Gently lift fuel tank **(a)** upwards and pull backwards slightly.
- Disconnect fuel pump connector **(b)** from fuel tank **(a)** and from fuel pump mounting plate hook.

⚠ CAUTION

DO NOT lift the tank too much to prevent damage to connectors and brake hoses.

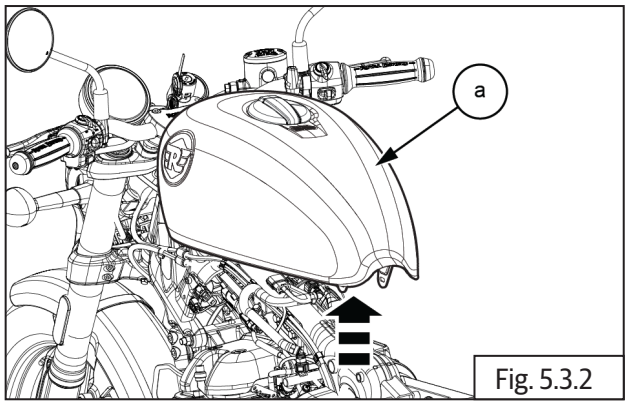

Fig. 5.3.2

- Disconnect fuel pump connector **(a)** from fuel tank **(b)** and from fuel pump mounting plate hook.

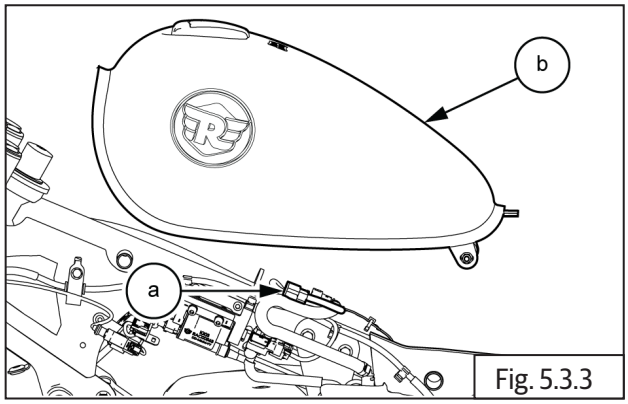

Fig. 5.3.3

5.3.11. Fuel Hose (Fuel Pump to Injector)

- Clean quick fix adapter area and disconnect by pressing lock button **(a)**. Remove fuel hose **(b)**.

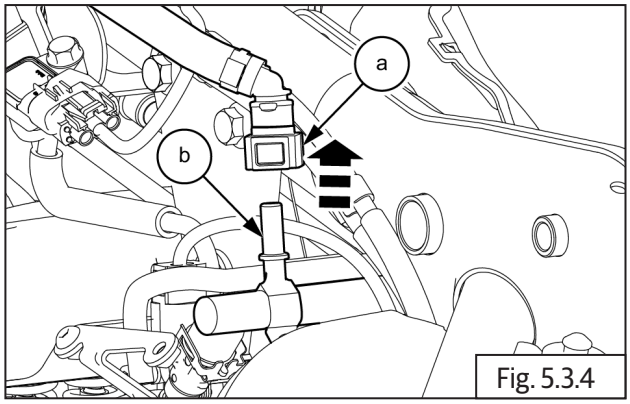

Fig. 5.3.4

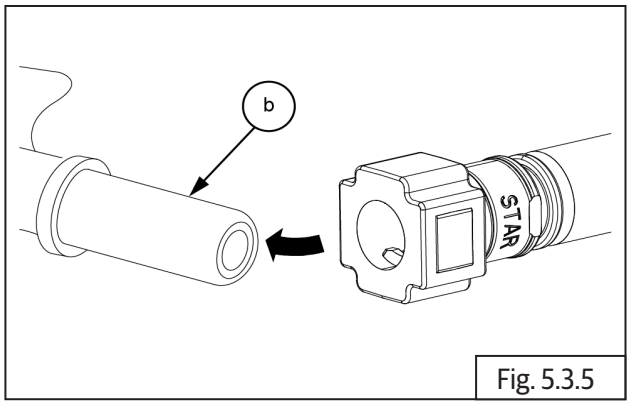

Fig. 5.3.5

5.3.12. EVAP Connections to Fuel Tank

- Disconnect EVAP connection hose **(a)** from bottom of fuel tank.

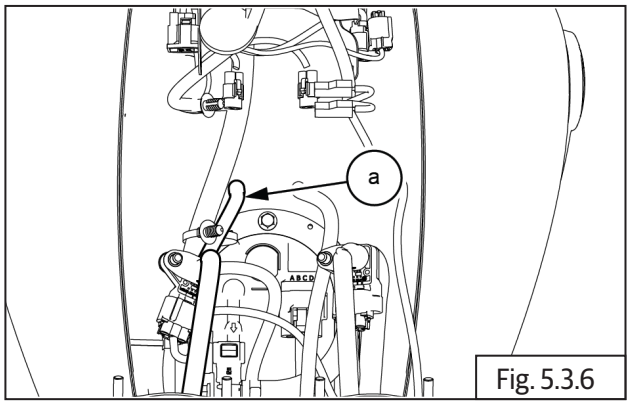

Fig. 5.3.6

5.3.13. Drain Hose

- Disconnect drain hose connection **(a)** from bottom of fuel tank .

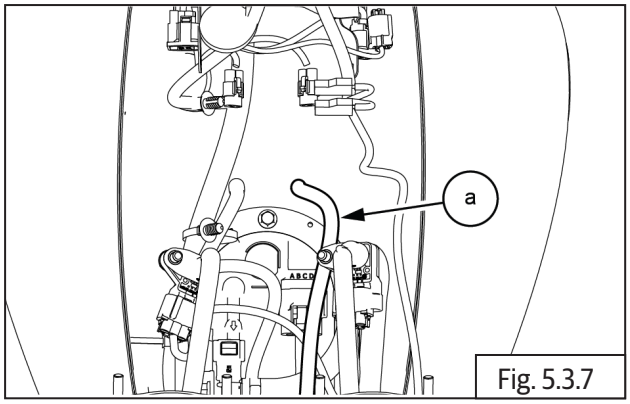

Fig. 5.3.7

- Gently remove fuel tank **(a)** from frame.

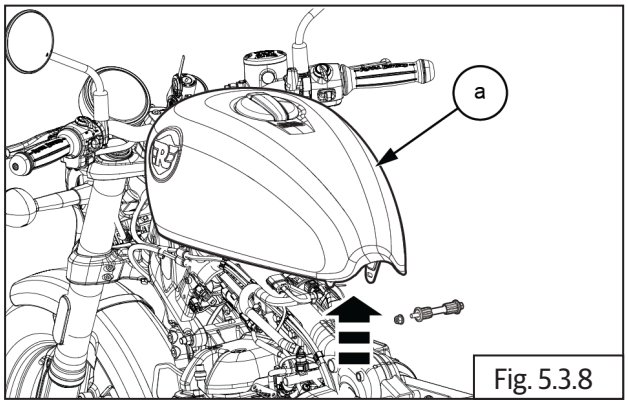

Fig. 5.3.8

5.3.14. Throttle Body Covers on LH and RH

- Loosen and remove 3 Nos **(M5) (a)** allen head screws from LH side throttle body cover .
- Remove LH side throttle body cover **(b)**.

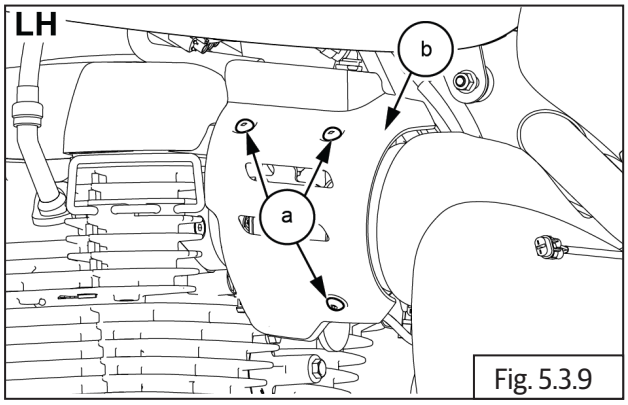

Fig. 5.3.9

	4 mm Allen Socket with Ratchet

5.3.15. Throttle Cable

(Connection on Throttle Body)

- Loosen 2 Nos. Hex head nuts **(M6) (a)** on RH throttle body **(b)** to release the tension in throttle cable.

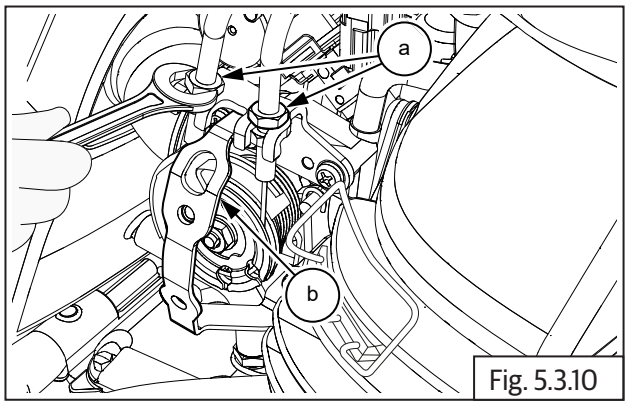

Fig. 5.3.10

	10 mm Double end spanner

- Gently pull throttle cable **(a)** out from bracket to release the adjuster and lock nuts **(b)** from throttle body.
- Repeat the procedure to release the other throttle cable.

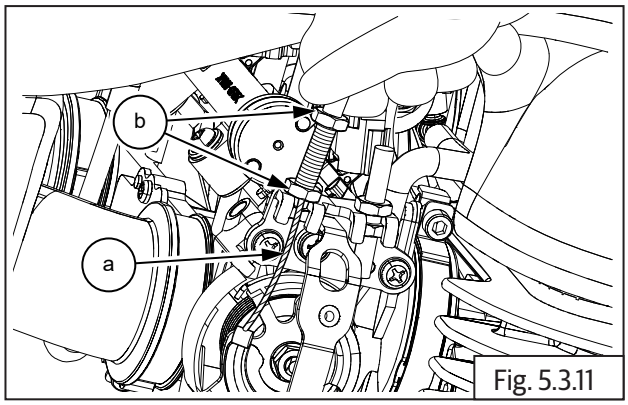

Fig. 5.3.11

5.3.16. Injector, TPS, MAPS, ISC Connections

Throttle Position Sensor (TPS), Manifold Absolute Pressure (MAP) Sensor and Idle Speed Controller (ISC)

- Disconnect throttle position sensor connector **(a)** from LH throttle body **(b)**.

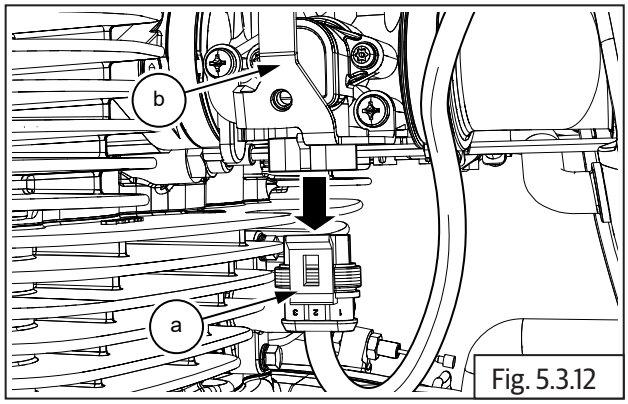

Fig. 5.3.12

- Gently press connector lock to disconnect fuel injector connectors **(a)** from LH and RH of throttle body **(b)**.

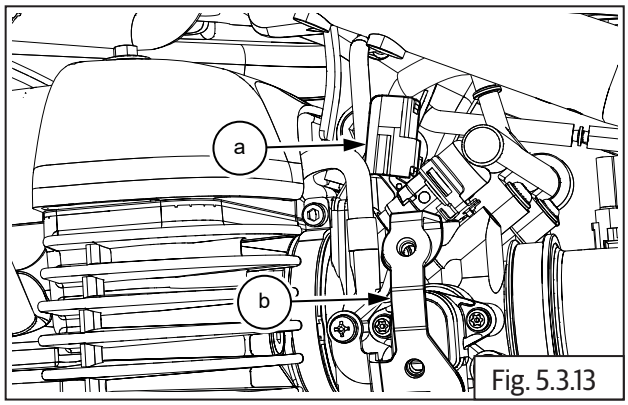

Fig. 5.3.13

- Disconnect idle speed control sensor connector **(a)** from throttle body **(b)**.

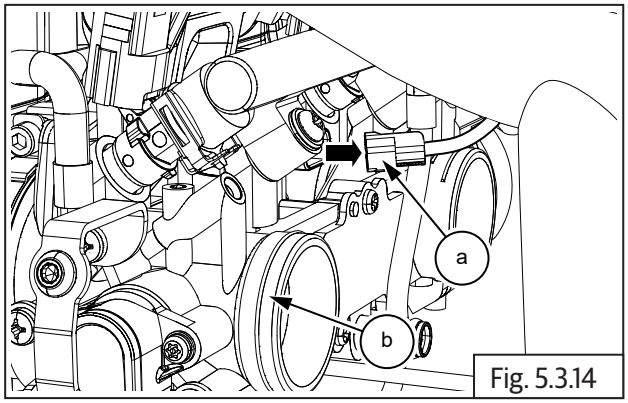

Fig. 5.3.14

5.3.17. Air Filter Housing to Throttle Body

- Loosen 2 Nos. Hex socket screws **(M5) (a)** sufficiently on the worm clips **(b)** on the LH and RH bellows between throttle body and air filter box assembly.

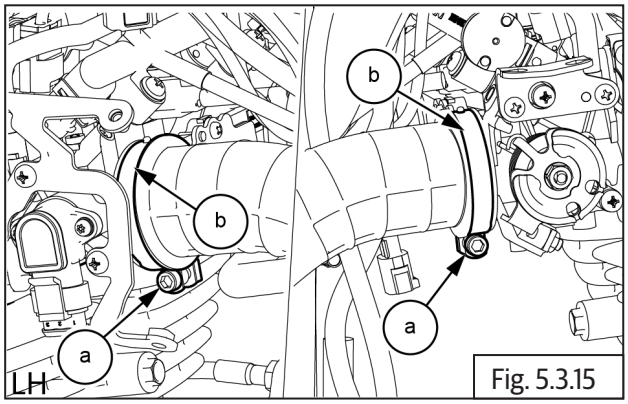

Fig. 5.3.15

	4 mm Allen Socket with Ratchet

5.3.18. Throttle Body

- Ensure throttle position sensor, manifold absolute pressure sensor and idle speed controller wiring connectors are disconnected.
- Disconnect the hoses **(a)** from canister purge valve.
- Loosen LH and RH worm clip screws **(M5) (b)** to disconnect throttle body from inlet manifolds.

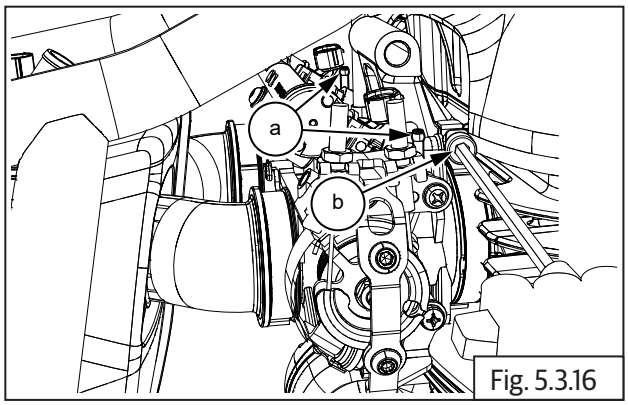

Fig. 5.3.16

	4 mm Allen key

5.3.19. Hego/Oxygen Sensor Connectors

- Disconnect Hego/oxygen sensor connectors **(a)** from both LH and RH on the front side top of engine.

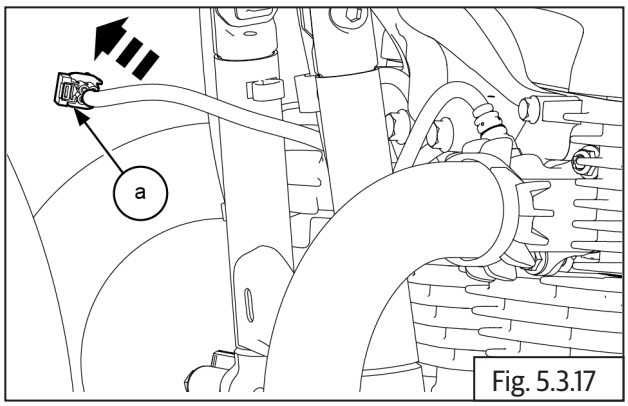

Fig. 5.3.17

5.3.20. Silencer / Muffler

- Loosen and remove 2 Nos. hex bolts **(M6) (a)** from the rear silencer guard at muffler end.

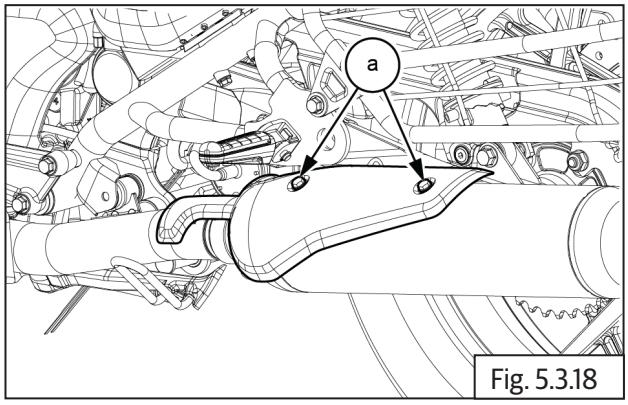

Fig. 5.3.18

	10 mm socket with ratchet

- Slightly slide and remove rear silencer guard **(a)** along with bolts .

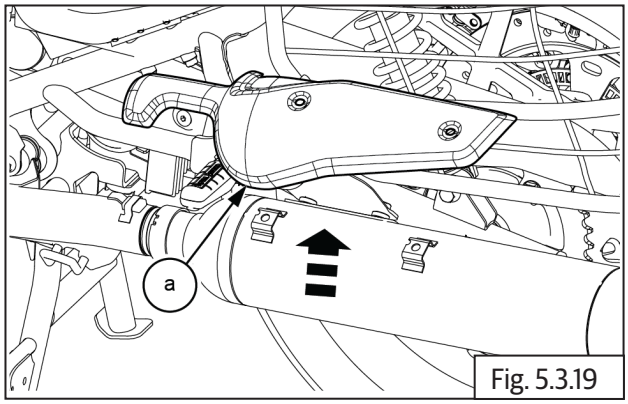

Fig. 5.3.19

- Remove 2 nos hex bolts **(M6) (a)** from front silencer guard at the header pipe end.

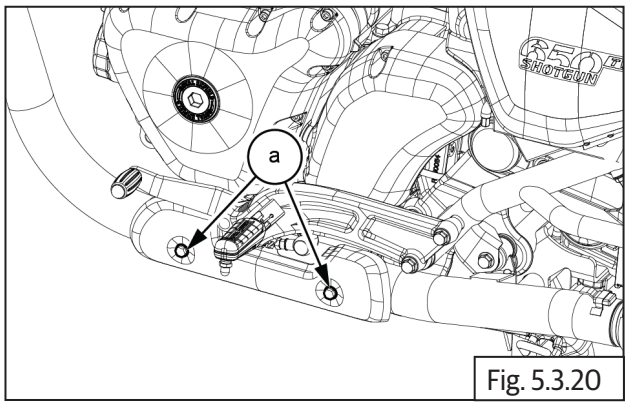

Fig. 5.3.20

	10 mm socket with ratchet

- Remove the front silencer guard **(a)** along with bolts.

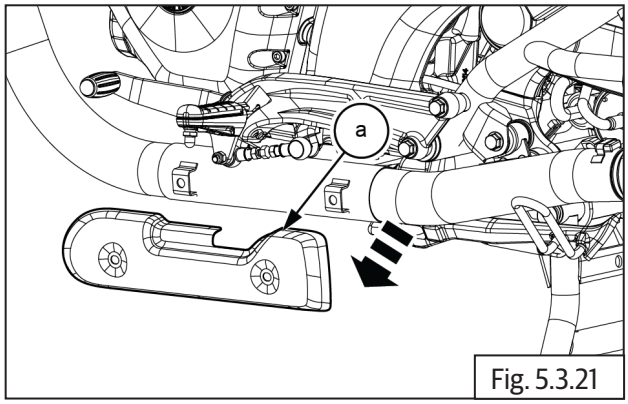

Fig. 5.3.21

- Remove the muffler mounting bolt **(M8) (a)** along with two washers **(b)** and two rubber grommets **(c)** from left side of the frame.

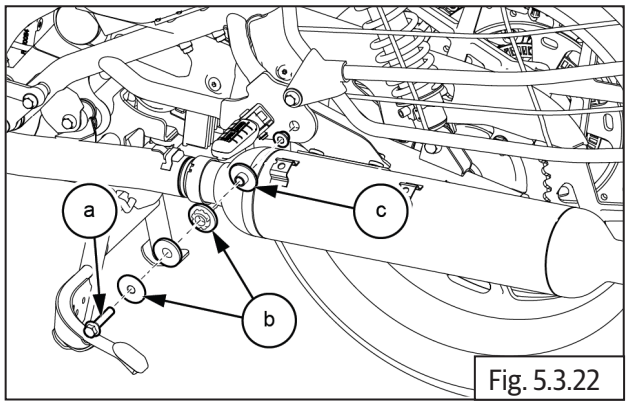

Fig. 5.3.22

	12 mm socket with ratchet

- Remove flange bolt **(M8) (a)** from exhaust muffler.

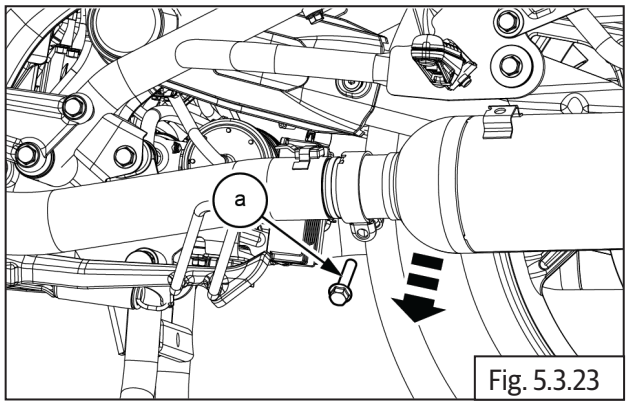

Fig. 5.3.23

	12 mm socket with ratchet

- Gently pull the exhaust muffler **(a)** outwards to remove.
- Ensure Exhaust pipe is supported suitably.

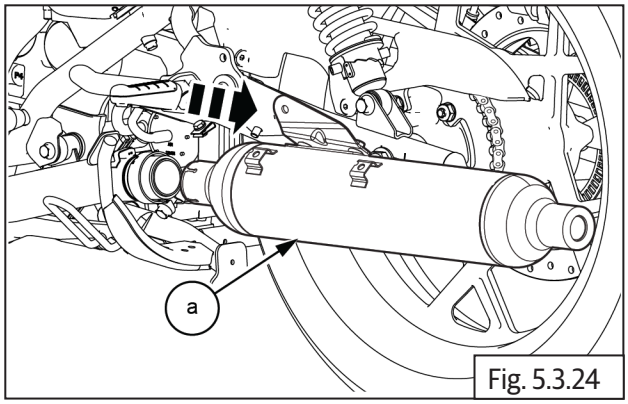

Fig. 5.3.24

- Remove gasket from **(a)** from exhaust muffler .

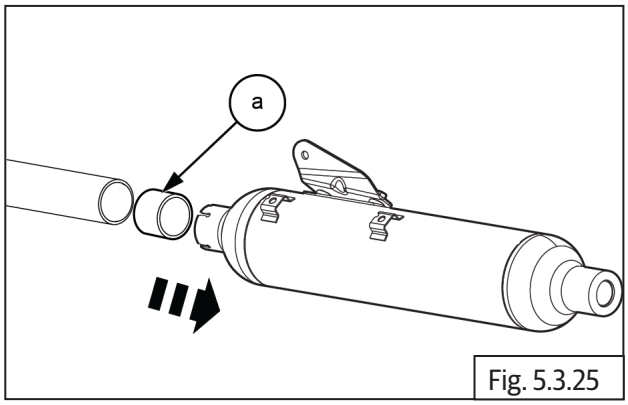

Fig. 5.3.25

- Remove 2nos bolts **(M8) (a)** from exhaust muffler bracket.

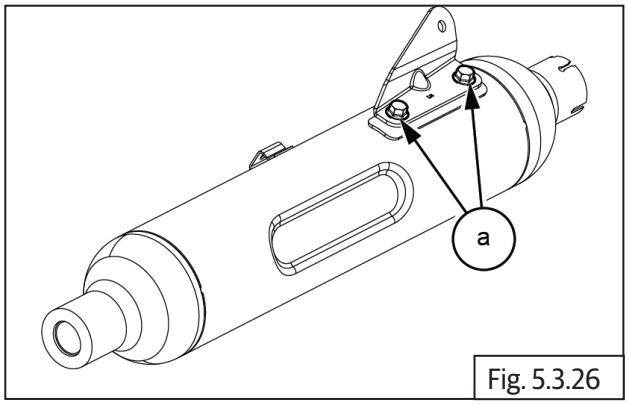

Fig. 5.3.26

- Remove bracket **(b)** along with bolts **(a)** from exhaust muffler .

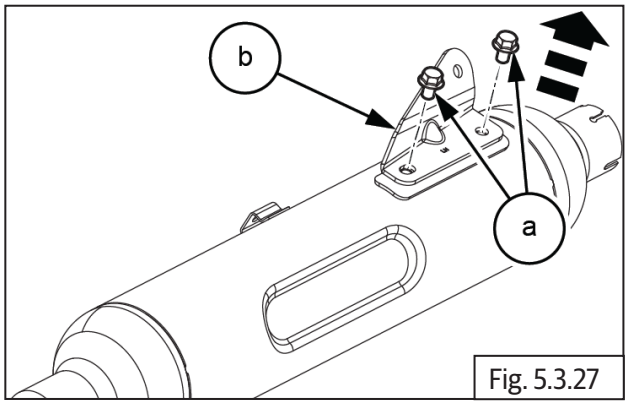

Fig. 5.3.27

	12 mm socket with ratchet

5.3.21. Exhaust Header Pipe

- Remove 2 nos nuts **(M8) (a)** from the cylinder head assembly.

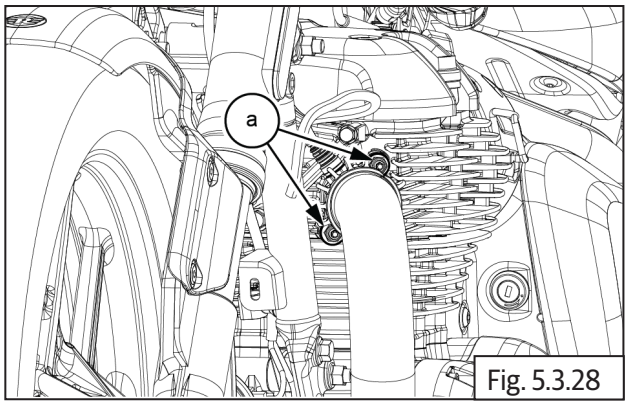

Fig. 5.3.28

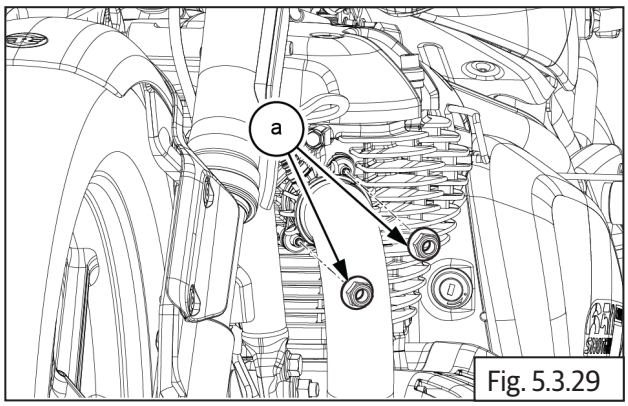

Fig. 5.3.29

	12 mm socket with ratchet

- Remove header pipe mounting bolt **(a) (M8)** along with two washers **(b)** and two rubber grommets **(c)** from left side of the frame.

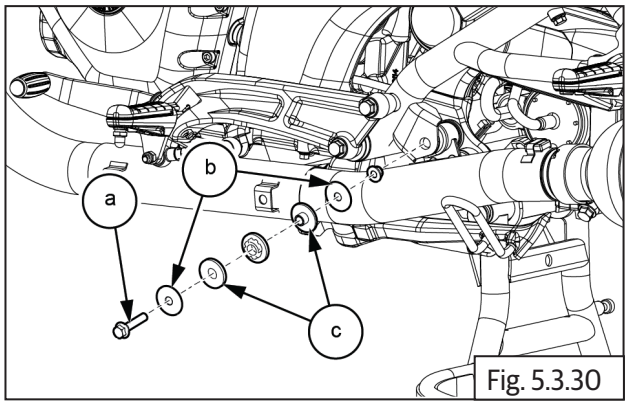

Fig. 5.3.30

•	12 mm socket with ratchet

- Remove the exhaust header pipe **(a)**.

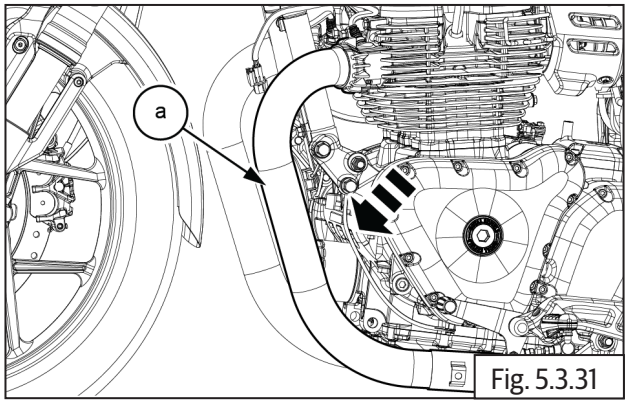

Fig. 5.3.31

- Remove 2 nos mounting fins **(a)** from header pipe

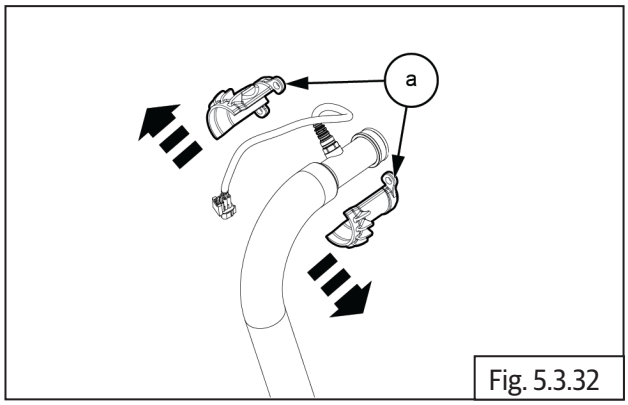

Fig. 5.3.32

- Remove exhaust gasket **(a)** from cylinder head.

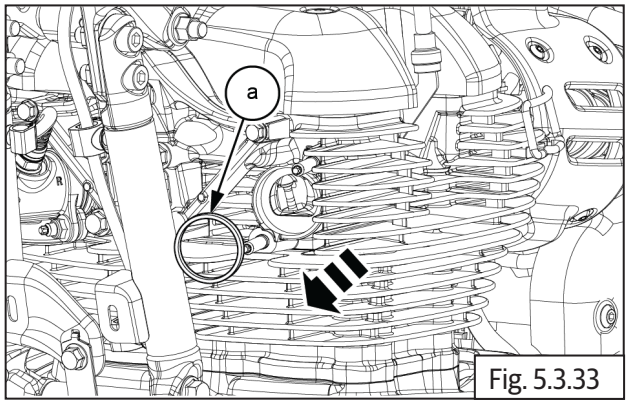

Fig. 5.3.33

- Repeat the entire removal procedure to RHS silencer **(a)**.

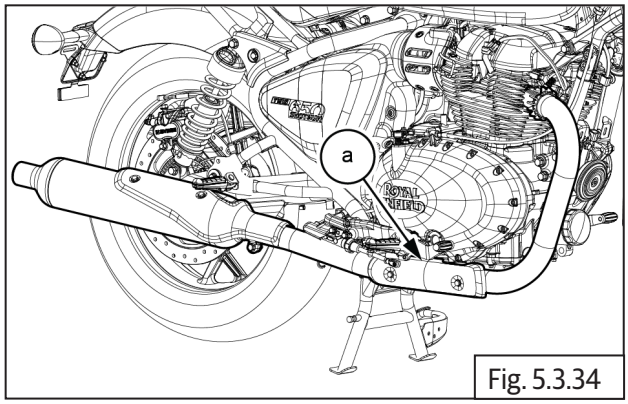

Fig. 5.3.34

5.3.22. Magneto/Gear Position/Side Stand

Magneto/Gear Position/Side Stand Switch Couplers Connections

- Disconnect the gear position sensor **(a)** located on rear side of engine **(b)**.

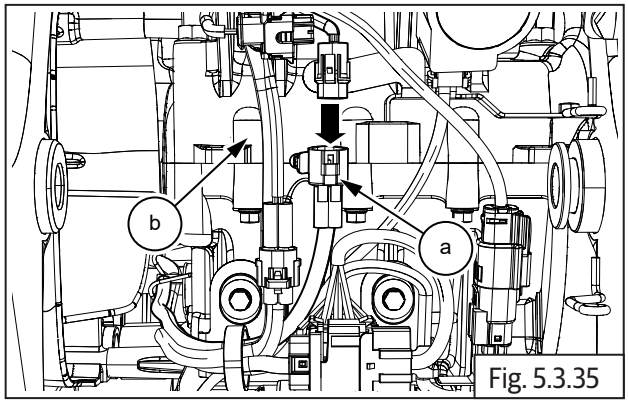

Fig. 5.3.35

- Disconnect magneto sensor connector **(a)** located on rear side of engine **(b)**.

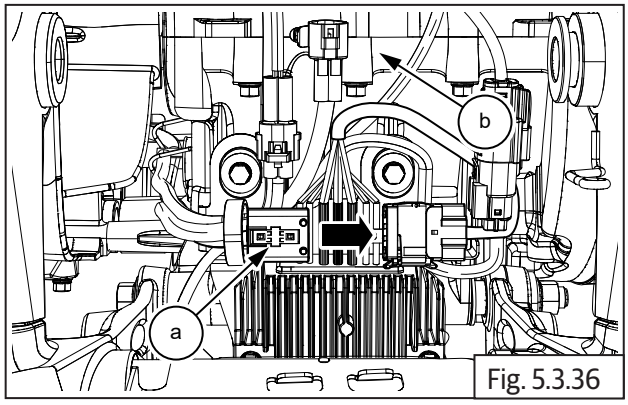

Fig. 5.3.36

- Disconnect side stand switch connector **(a)** located on rear bottom of engine **(b)**.
- Disconnect crank position sensor connector **(c)**.

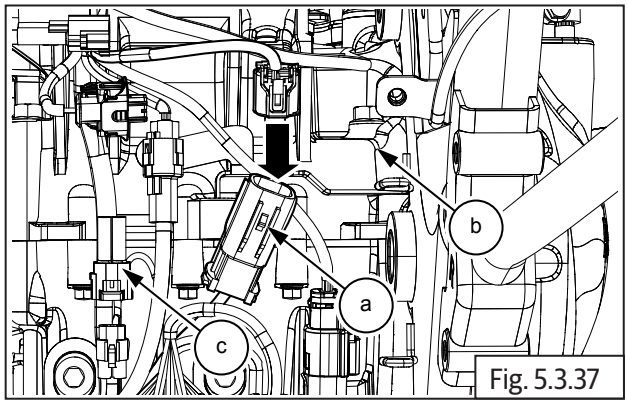

Fig. 5.3.37

5.3.23. Starter Motor Connection

- Loosen and remove Hex nut **(M6) (a)** from starter motor **(b)** to disconnect positive (+) terminal.

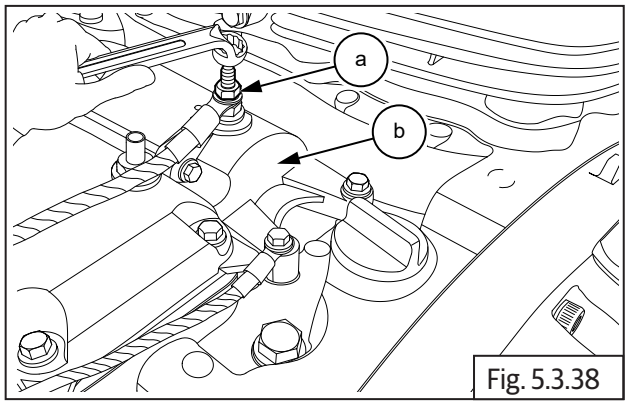

Fig. 5.3.38

	10 mm Ring Spanner

- Loosen and remove 2 Nos. Hex flange head bolt **(M6) (a)** to disconnect starter motor **(b)** negative (-) terminal.

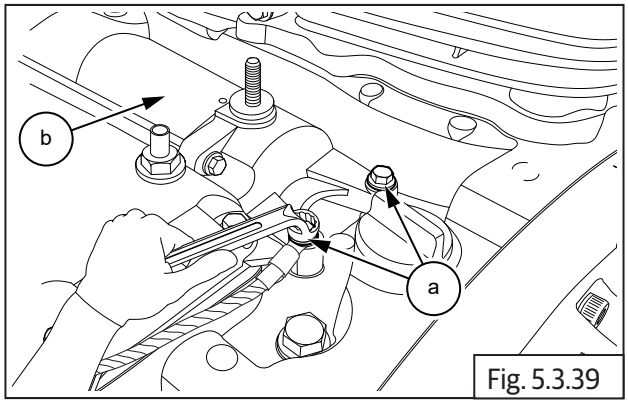

Fig. 5.3.39

	10 mm Ring spanner

5.3.24. Spark Plug Suppressor Caps on LH

- Gently pull out/disconnect spark plug suppressor cap **(a)** from LH cylinder spark plug **(b)**.

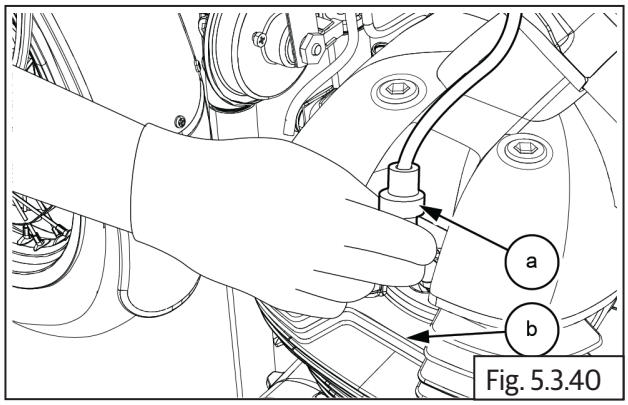

Fig. 5.3.40

- Gently pull out/disconnect spark plug suppressor cap **(a)** from RH cylinder spark plug **(b)**.

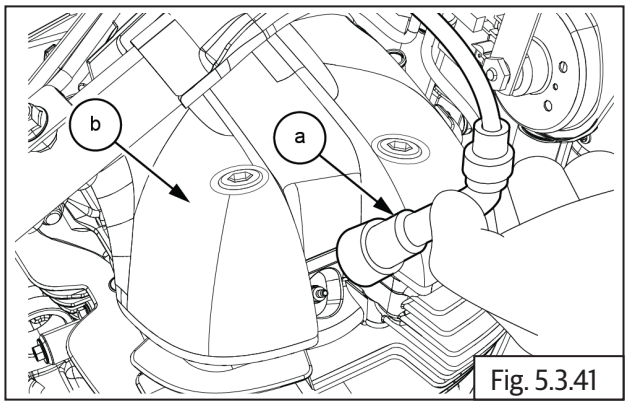

Fig. 5.3.41

5.3.25. Breather Hose Connection

(From Breather Box to Air Filter Box)

- Release the clamp **(a)** to disconnect breather hose **(b)** from air filter box **(c)**.

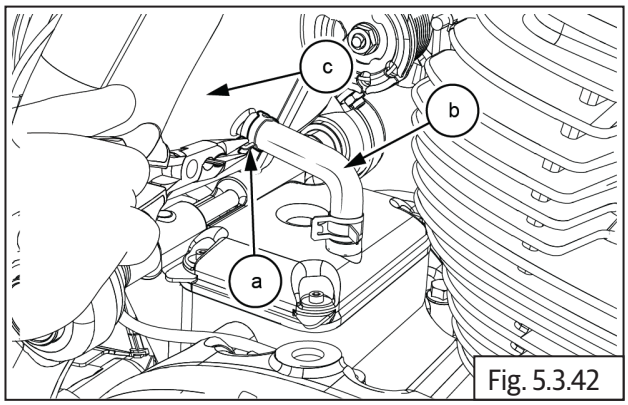

Fig. 5.3.42

	Nose plier

- Release clamp **(a)** to remove hose from breather box **(b)**.

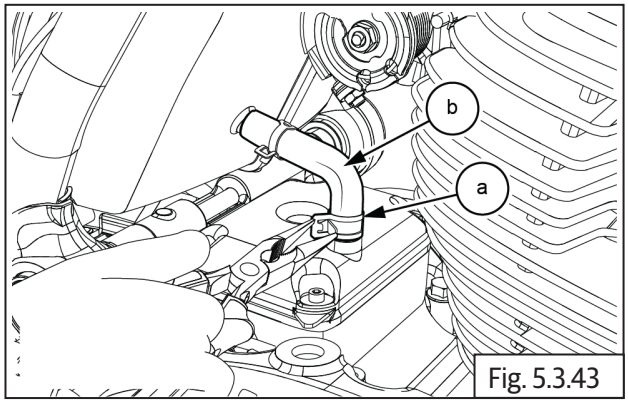

Fig. 5.3.43

	Nose plier

5.3.26. Gear Shift Linkage (Control Plate (LHS))

- Loosen and remove 2 Nos hex nut **(a)** and **(b)** from gear shift linkage.

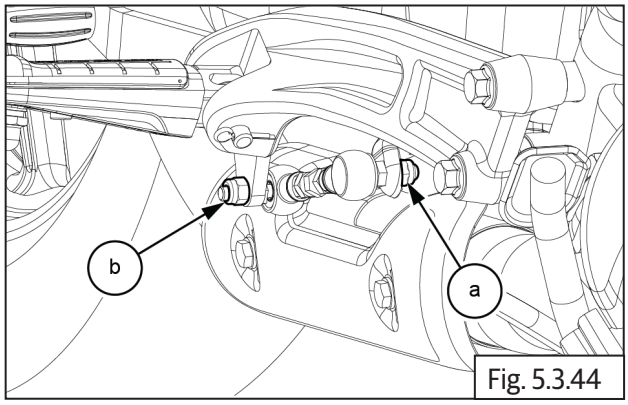

Fig. 5.3.44

	10 mm Socket with Ratchet

- Remove gear shift linkage **(a)** from LH control plate.

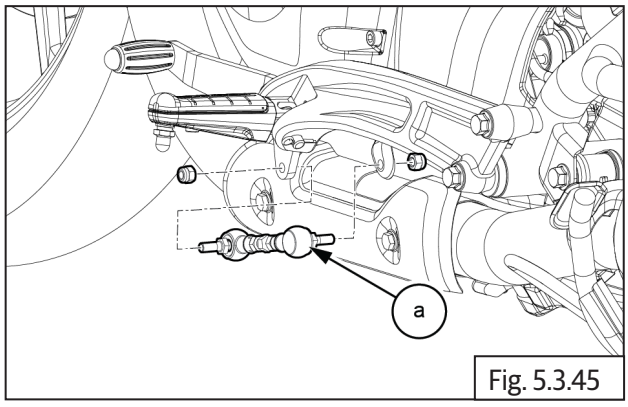

Fig. 5.3.45

- Loosen and remove 2 Nos hex bolts **(a) (M10)** from LH control plate **(b)**.

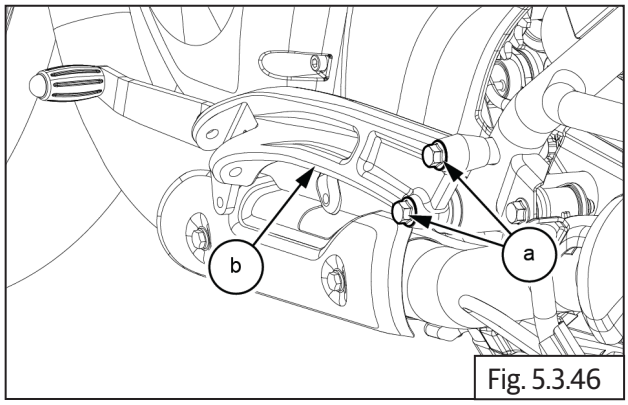

Fig. 5.3.46

	14 mm Socket with Ratchet

- Remove LH control plate **(a)** from frame.

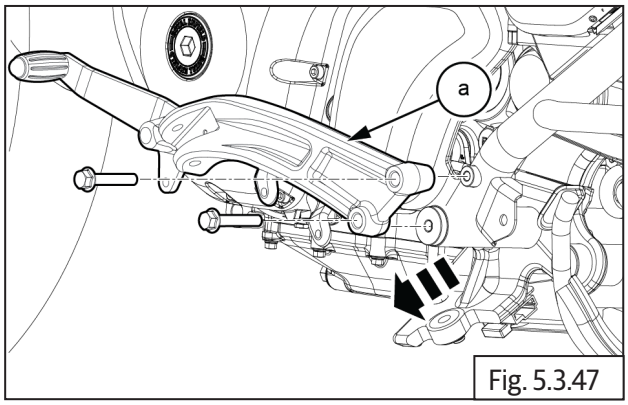

Fig. 5.3.47

- Loosen and remove allen head bolt **(a) (M8)** from gear shift pedal.

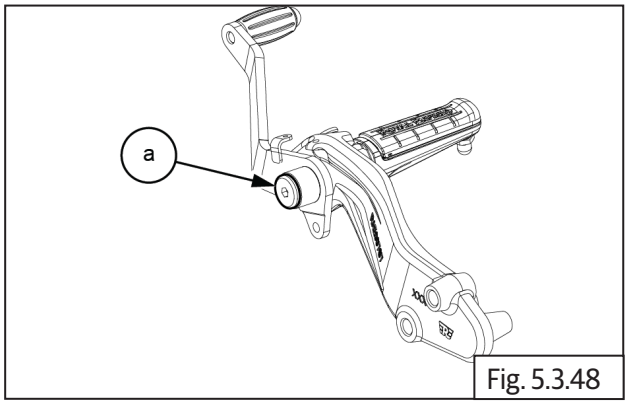

Fig. 5.3.48

	6 mm Allen Socket with Ratchet

- Remove gear shift pedal **(a)** along with bush **(b)** and bolt **(c)** from LH control plate.

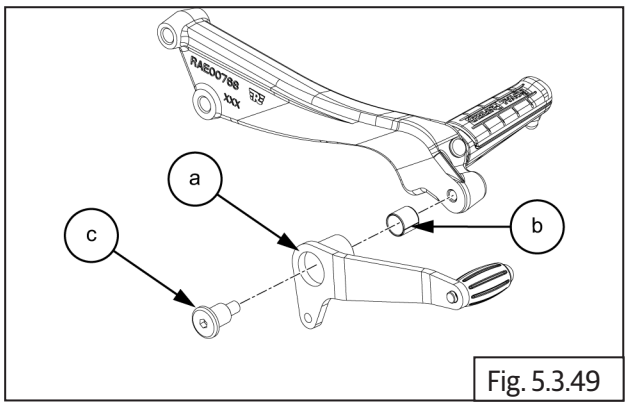

Fig. 5.3.49

5.3.27. Control Plate (RHS)

- Remove pivot lock **(a)** from rear master cylinder.

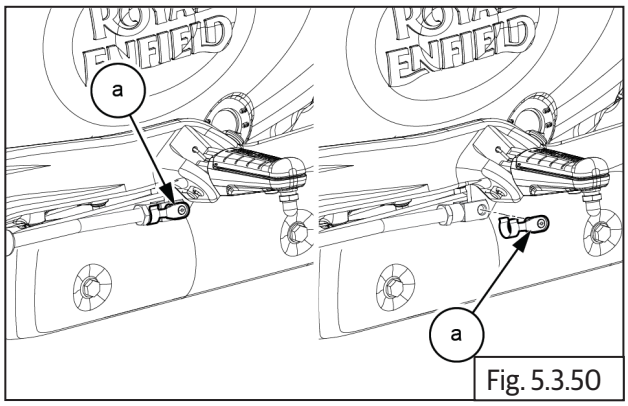

Fig. 5.3.50

	Plier

- Remove hex bolt **(a) (M6)** from master cylinder reservoir.

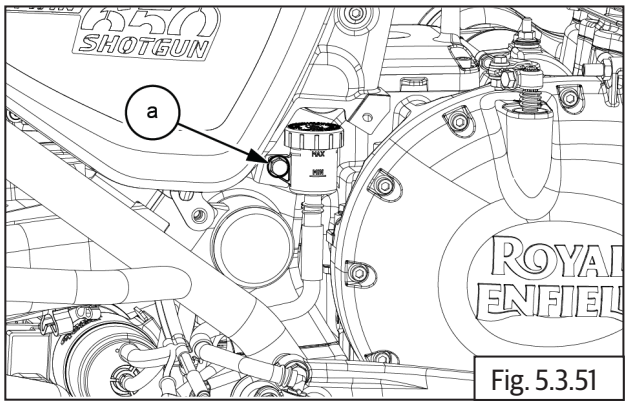

Fig. 5.3.51

	10 mm Socket with Ratchet

- Remove 2 Nos hex bolts **(a) (M6)** from RH rear brake master cylinder.

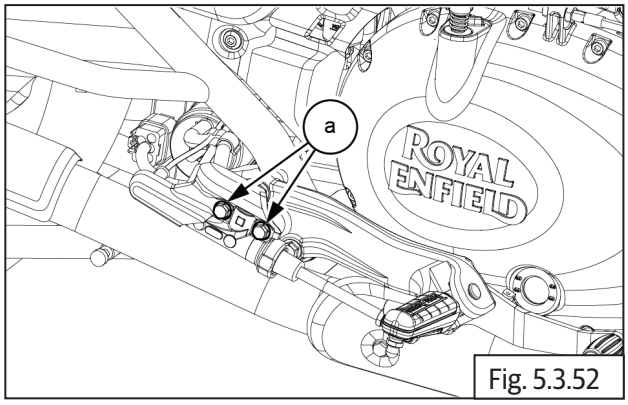

Fig. 5.3.52

- Remove master cylinder guard **(b)** with bolts **(a)** from RH rear brake master cylinder.

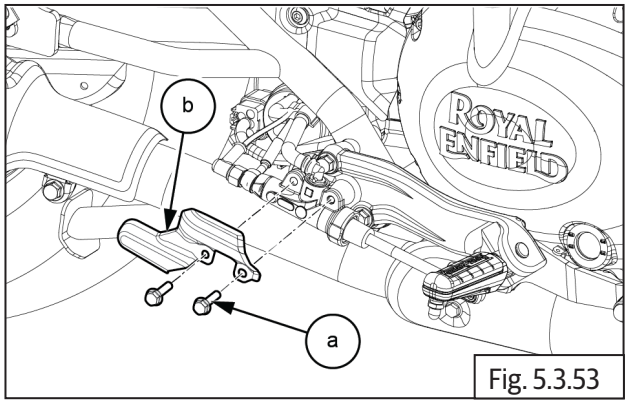

Fig. 5.3.53

- Loosen and remove 2 Nos hex bolts **(a) (M10)** from RH control plate.

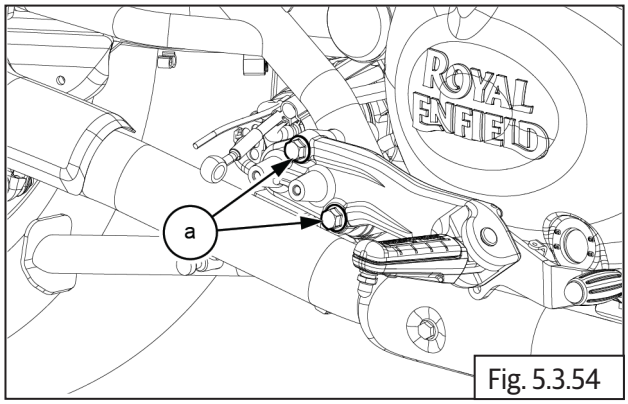

Fig. 5.3.54

	14 mm Socket with Ratchet

- Remove RH control plate **(b)** with bolts **(a)** from frame.

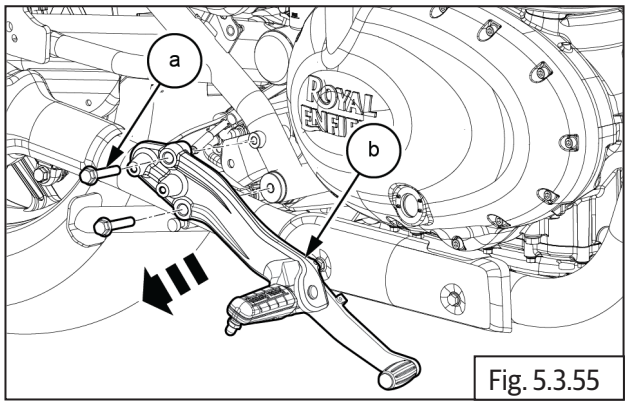

Fig. 5.3.55

- Remove allen head bolt **(a) (M8)** from brake pedal.

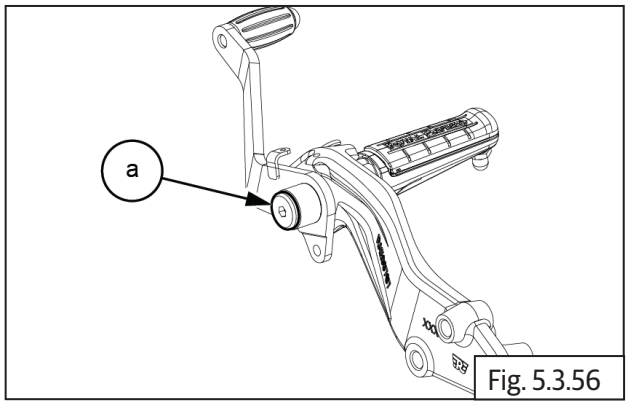

Fig. 5.3.56

	6 mm Allen Socket with Ratchet

- Remove brake pedal **(a)** along with bush **(c)** and spring **(b)** from RH control plate.

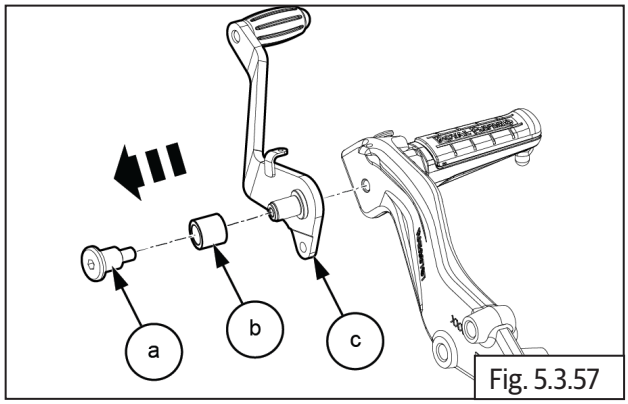

Fig. 5.3.57

5.3.28. FD Sprocket Cover

- Loosen and remove 3 Nos. Hex socket head screws **(M6) (a)** from FD sprocket cover on the LH side of engine,.

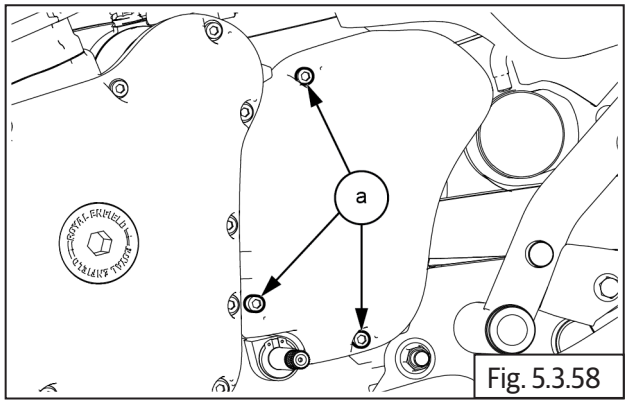

Fig. 5.3.58

	5 mm Allen socket with Ratchet

- Gently pull out FD sprocket cover **(a)**.

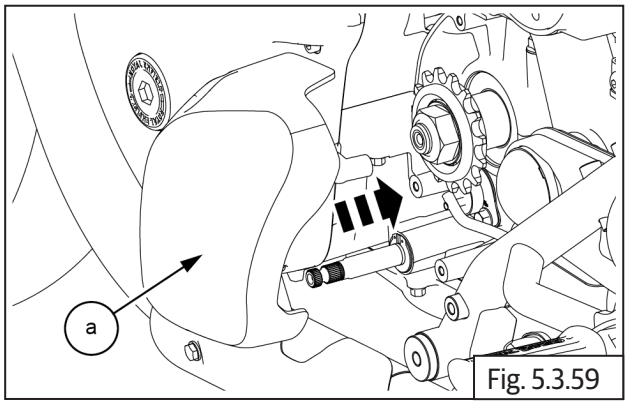

Fig. 5.3.59

5.3.29. Rear Wheel (Increasing chain slack)

- Loosen rear wheel axle nut **(M16) (a)** and **(b)** to increase the chain slackness/tension.

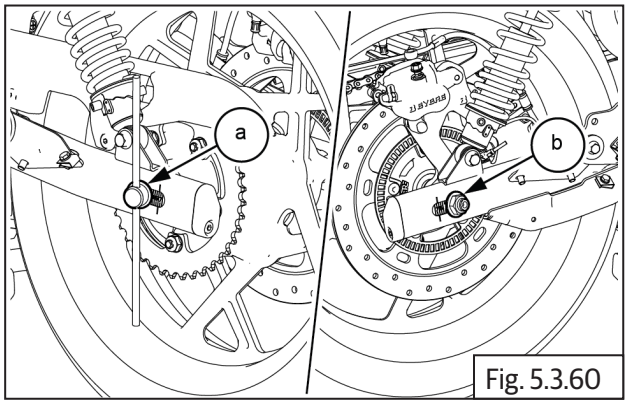

Fig. 5.3.60

	24 mm Socket with Ratchet

- Loosen chain adjuster lock nut **(M8) (a)** and **(b)** on LH and RH.

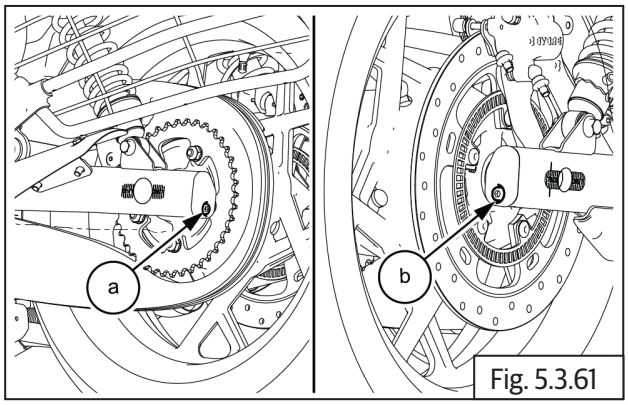

Fig. 5.3.61

	6 mm Allen Key

5.3.30. Remove Rear Chain from FD Sprocket

- Gently remove chain **(a)** from FD sprocket **(b)**.

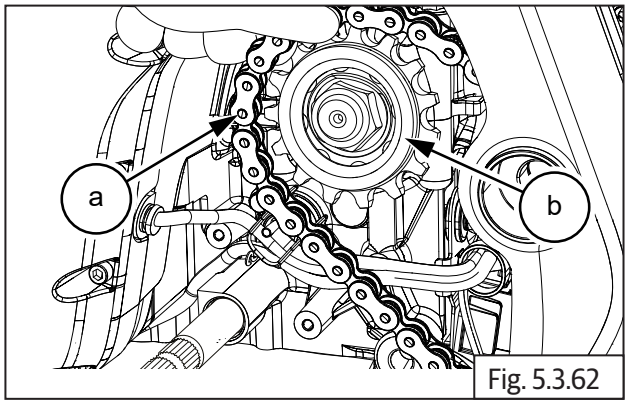

Fig. 5.3.62

5.3.31. Gear Position Indicator Sensor

- Loosen and remove 2 Nos. Hex flange head bolts **(M6) (a)**.

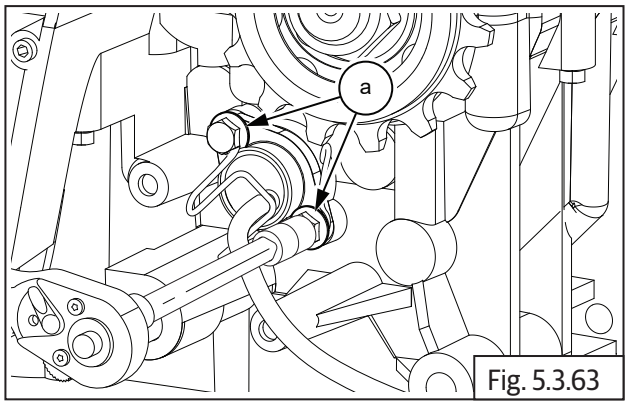

Fig. 5.3.63

	10 mm Socket with Ratchet

- Remove gear position sensor **(a)** along with the bracket **(b)**.

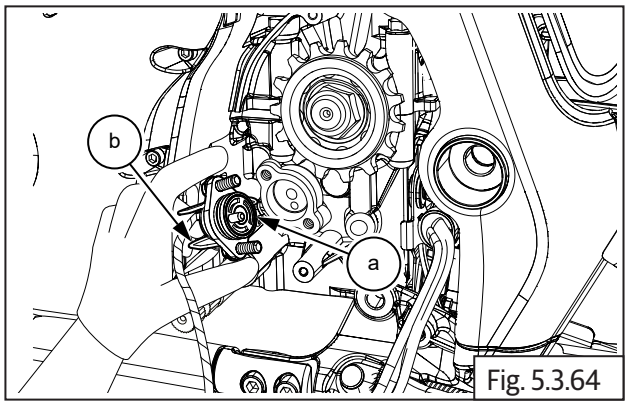

Fig. 5.3.64

5.3.32. Engine Steady Bracket

- Support the bottom of engine suitably.
- Loosen and remove Hex socket head bolt **(M8) (a)** on RH side and hold hex nut on LH **(b)**.

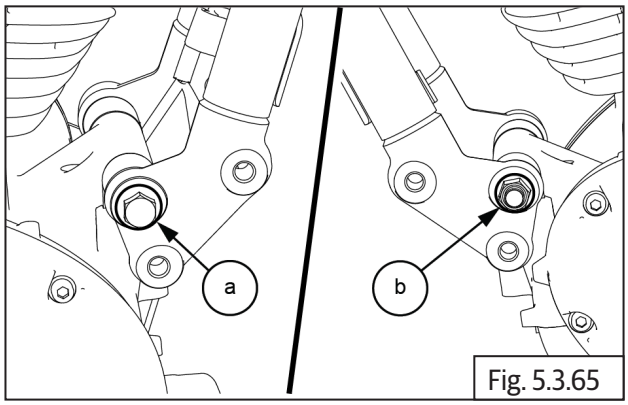

Fig. 5.3.65

	6 mm Allen key
	14 mm Socket with Ratchet

5.3.33. Engine Cylinder Head Steady Bracket

- Remove 2 Nos. Hex flange head bolts **(M8) (a)** with nut **(b)** from LH and RH steady brackets

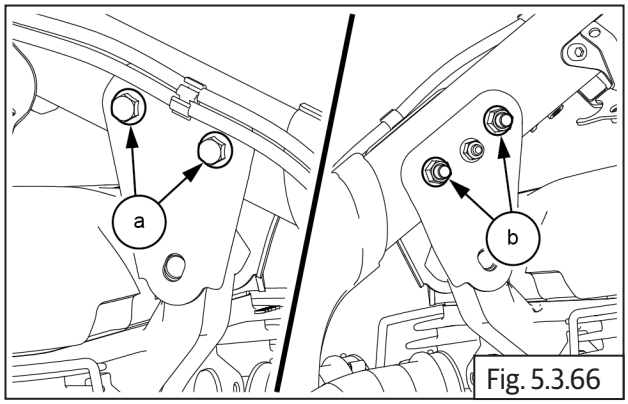

Fig. 5.3.66

	12 mm Socket with Ratchet

- Remove the LH **(a)** and RH **(b)** steady brackets from frame .

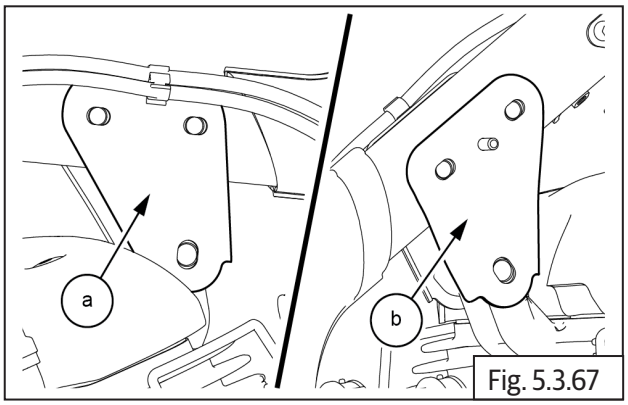

Fig. 5.3.67

5.3.34. Cradle Frame Top Mountings

Cradle Frame Top Mountings from Main Frame

- Support engine/cradle frame with scissor jack so that it will not fall off when mounting bolts are removed.

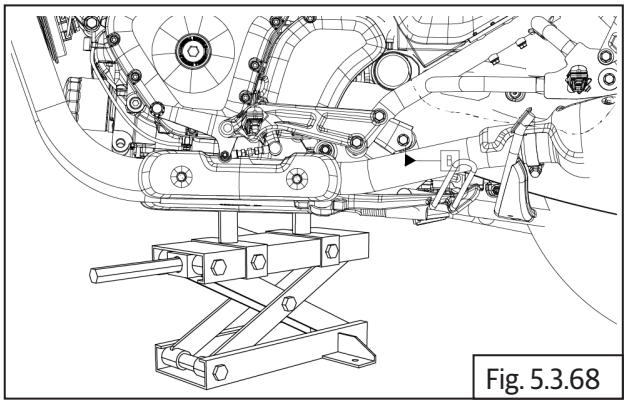
Fig. 5.3.68

- Loosen and remove 4 Nos. Hex socket head bolts **(M10) (a)** on LH and RH holding cradle frame top on main frame .

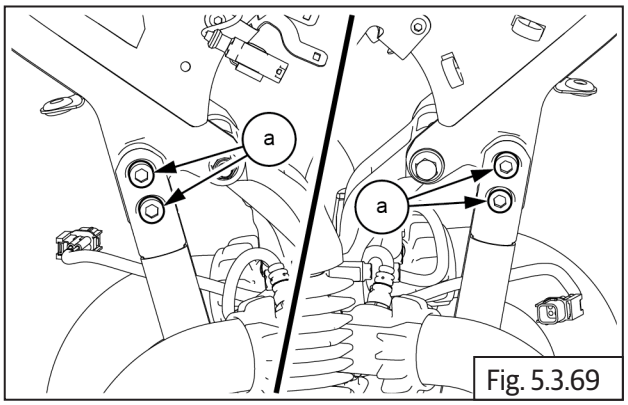

Fig. 5.3.69

	8 mm Allen socket with Ratchet

- Loosen and remove 1 Nos. Hex socket head bolts **(M10) (a)** with nut **(b)** on LH and RH from top frame.

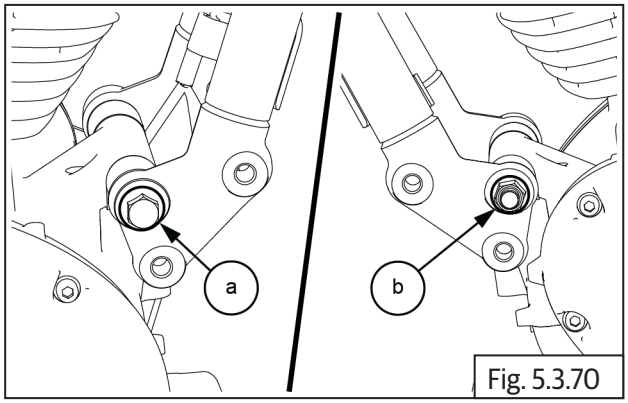

Fig. 5.3.70

	14 mm Socket with Ratchet

- Remove the cradle frame **(a)** from top mounting.

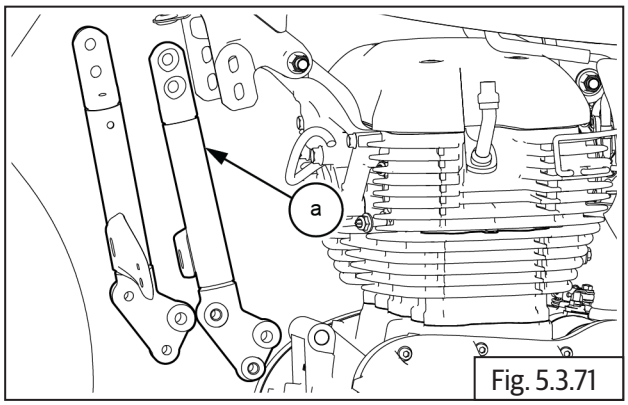

Fig. 5.3.71

5.3.35. Rear Frame Bottom Mountings

- Loosen and remove Hex bolt and nut **(M10) (a)** along with washer from RH bottom mainframe **(b)**.

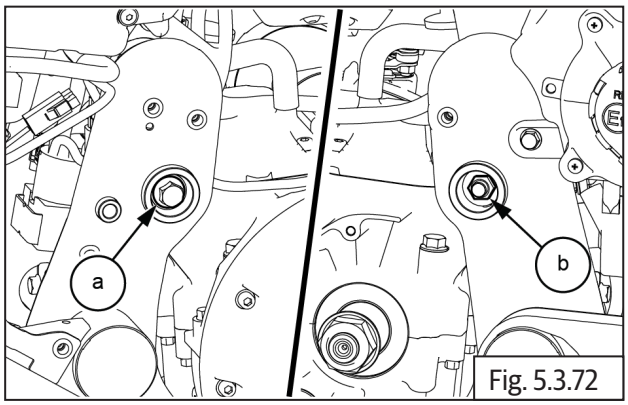

Fig. 5.3.72

	14 mm Socket with Ratchet

- Locate special tool on main frame to bottom top mounting adjuster **(a)** from frame RH on rear side of engine.

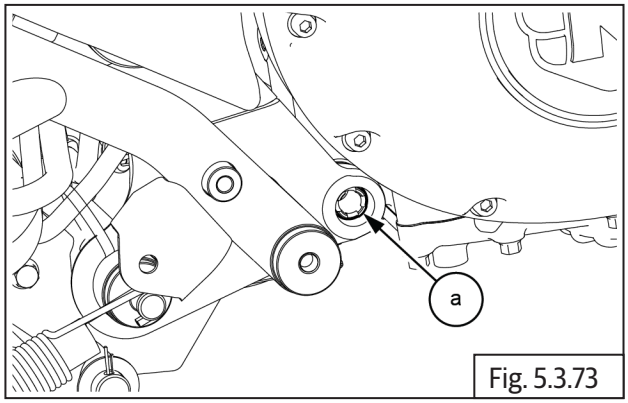

Fig. 5.3.73

SPL	Part No: ST30267/a
	Part Name: Frame Adj OD 14.8/ID 10.8 mm-Engine

5.3.36. Rear Top Engine Mountings

Rear Top Engine Mounting from Main Frame

- Loosen and remove Hex bolt **(M10) (a)** and nut **(b)** along with washer from RH top mainframe.

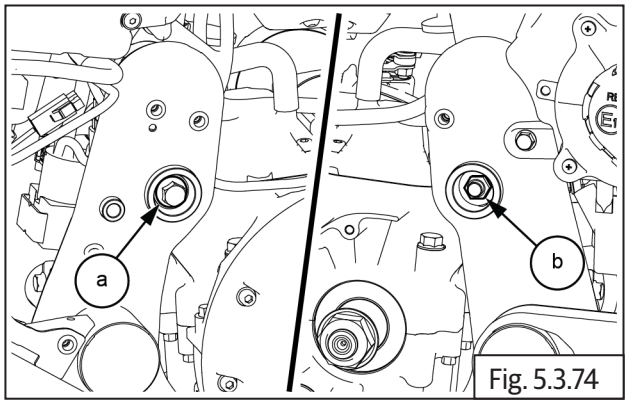

Fig. 5.3.74

	14 mm Socket with Ratchet

- Locate special tool on main frame to top mounting adjuster **(a)** from frame RH on rear side of engine.

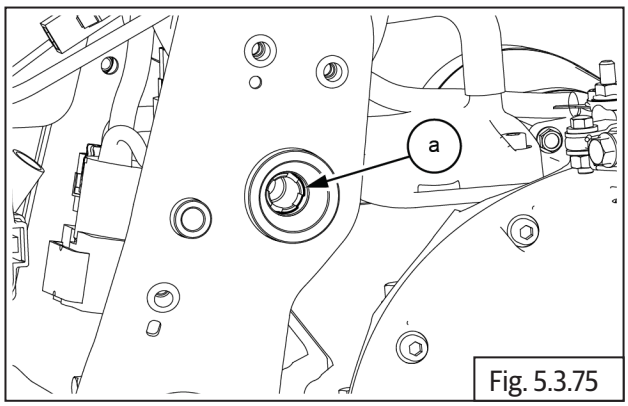

Fig. 5.3.75

SPL	Part No: ST30267/a
	Part Name: Frame Adj OD 14.8/ID 10.8 mm-Engine

Rear Top Engine Mounting from Main Frame

- Locate special tool on main frame to top mounting adjuster **(a)** from frame RH on rear side of engine.

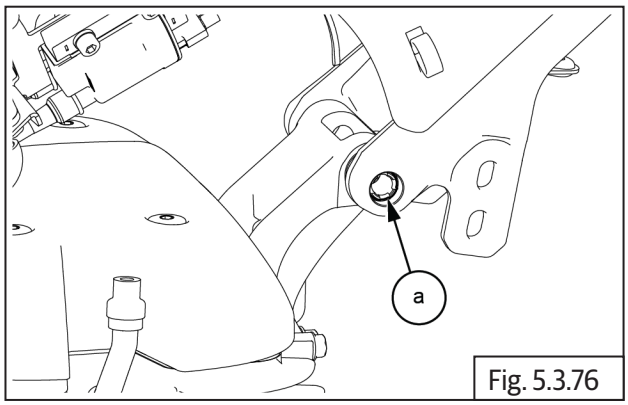

Fig. 5.3.76

SPL	Part No: ST30267/a
	Part Name: Frame Adj OD 14.8/ID 10.8 mm-Engine

5.3.37. Engine from Main Frame

Lower Bottom Support and Slide Out Engine along with Cradle Frame from Main Frame

- Ensure bottom of engine is supported suitably.
- Gently lower engine **(a)** from main frame.

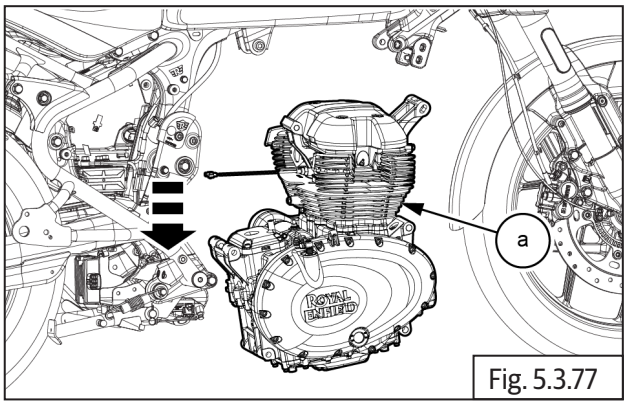

Fig. 5.3.77

- Loosen and remove 2Nos hex head bolts **(M6) (a)** from head mount bracket**.**

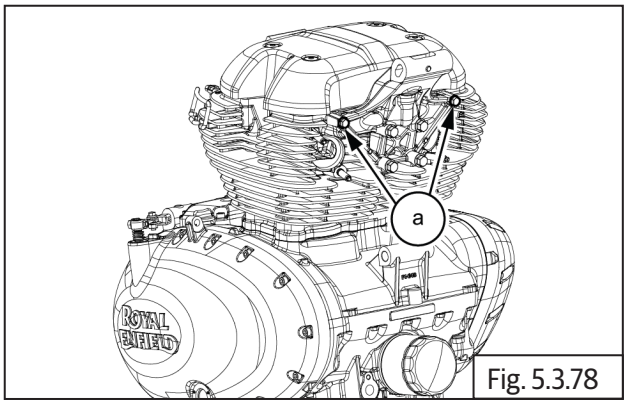

Fig. 5.3.78

	10 mm Socket with Ratchet

- Loosen and remove 4Nos hex head bolts **(M8) (a)** from head mount bracket.

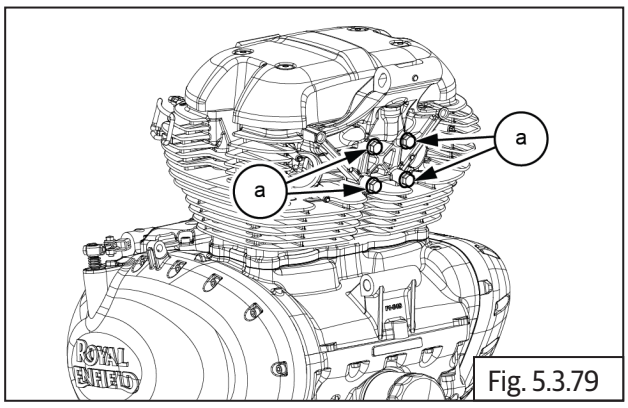

Fig. 5.3.79

	12 mm Socket with Ratchet

- Remove the head mount bracket **(a)**.

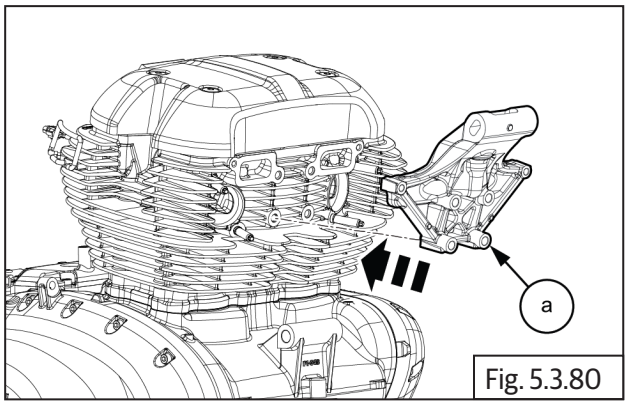

Fig. 5.3.80

ENGINE ASSEMBLY TO FRAME

CONTENTS PAGE

5.4 Engine Assembly to Frame.....169

5.4.1. Cradle Assembly frame..... 169

5.4.2. Rear Top Engine Mountings.....172

5.4.3. Rear Frame Bottom Mountings 172

5.4.4. Cradle Frame Top Mountings.....173

5.4.5. Engine Steady Bracket.....173

5.4.6. Gear Position Indicator Sensor 173

5.4.7. Rear Chain to FD sprocket.....174

5.4.8. FD Sprocket Cover.....174

5.4.9. Gear Shift Linkage (Control Plate (LHS).....174

5.4.10. Breather Hose Connection.....176

5.4.11. Spark Plug Suppressor Caps.....176

5.4.12. Starter Motor Connections.....177

5.4.13. Magneto/Side Stand Switch Connectors.....177

5.4.14. Exhaust Pipe on Cylinder Head RH.....177

5.4.15. Exhaust Header Pipe 178

5.4.16. Silencer / muffler 179

5.4.17. Hego/Oxygen Sensor Connectors.....181

5.4.18. Throttle Body 181

5.4.19. Air Filter Housing to Throttle Body.....182

5.4.20. Injector, TPS and Map Connections.....182

5.4.21. Throttle Cables 183

5.4.22. Throttle Body Covers on LH and RH.....183

5.4.23. Fuel Tank..... 184

5.4.24. EVAP to Fuel Tank Connections..... 184

5.4.25. Fuel Hose (Fuel Pump to Injector) 184

CONTENTS PAGE

5.4.26. Fuel Level Sensor and Fuel Pump 184

5.4.27. Clutch Cable 185

5.4.28. Battery Connections 186

5.4.29. Rider Seat 187

5.4.30. Pillion Seat 188

5.4.31. Side Panel LH 189

5.4.32. Side Panel RH 189

5.4.33. Oil Filter 190

5.4.34. Oil Cooler Mountings to Frame 190

5.4.35. Oil Cooler Inlet and Outlet Pipes 190

5.4.36. Drain Bolt and Engine Oil Re-fill 191

5.4.37. Oil Pressure Checking Procedure 192

COMPONENTS ASSEMBLY SEQUENCE TO ASSEMBLE ENGINE INTO FRAME - FLOW CHART

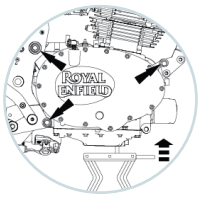

Assemble cradle frame to engine using four mounting bolts

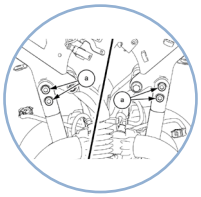

Support engine with cradle frame assembly and position into main frame from LH side



Align cradle frame with main frame mounting holes and locate front and rear mounting bolts

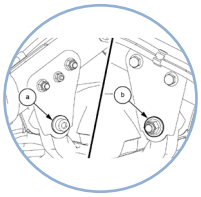

Position engine steady bracket LH and RH on engine rear top and tighten with bolts

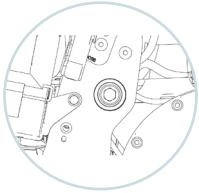

Align steady bracket mounting holes to frame and tighten with bolt

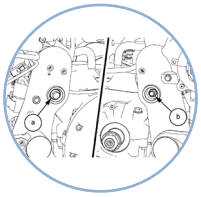

Centralize engine to rear frame, top and center mountings and tighten adjusters using special tools

C



Assemble washers and nuts on mounting bolts and tighten cradle frame to main frame

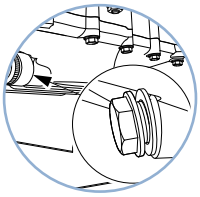

Assemble engine drain bolt

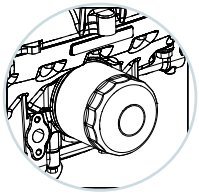

Assemble oil filter

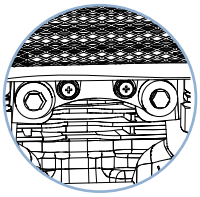

Assemble oil cooler on frame

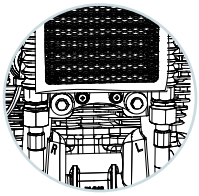

Assemble oil cooler inlet and outlet pipes to engine

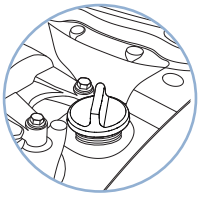

Fill engine oil

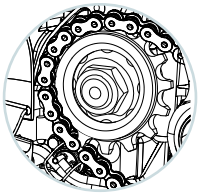

Assemble FD sprocket on drive shaft

C

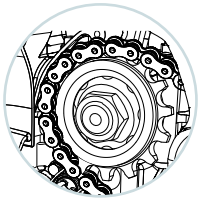

Assemble rear chain on FD sprocket

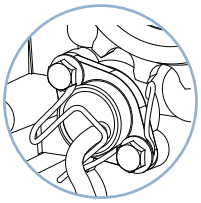

Assemble gear position indicator sensor with bracket on engine LH side

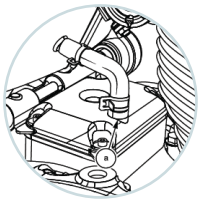

Connect breather hose between breather and air filter

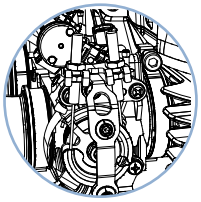

Assemble throttle body on engine

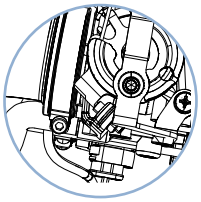

Connect air inlet hoses to throttle body

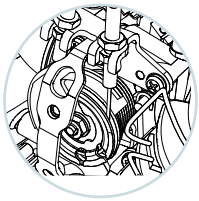

Connect throttle cables to throttle body

C

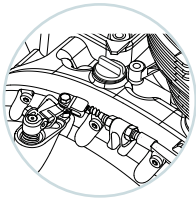

Connect clutch cable

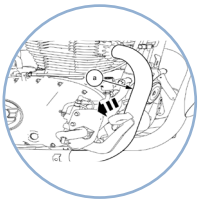

Assemble LH and RH exhaust pipe and silencer

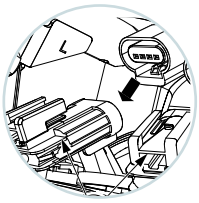

Connect Hego/Oxygen sensor connectors to main wiring harness

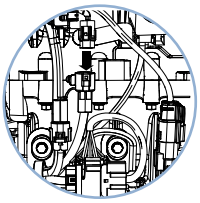

Connect Magneto/Side stand switch connectors to wiring harness

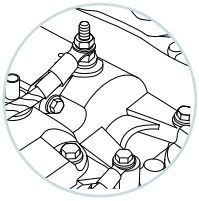

Assemble starter motor and wiring connections

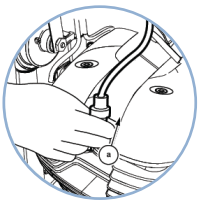

Locate spark plug suppressor caps on LH and RH spark plugs

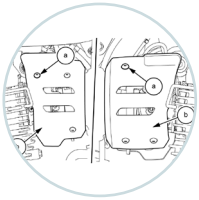

Assemble throttle body covers on LH and RH sides of throttle body

C

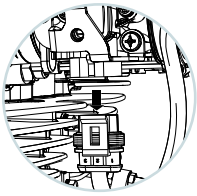

Connect Injector, TPS and Map Sensor connectors to wiring harness

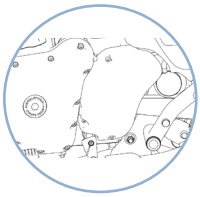

Assemble FD sprocket cover

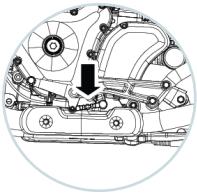

Assemble gear shift linkage to gear shaft

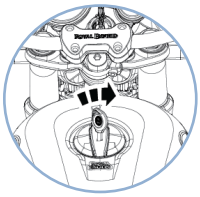

Position fuel tank on frame

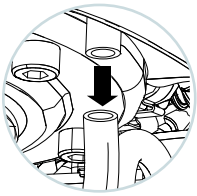

Connect EVAP and drain hoses to fuel tank

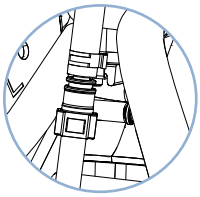

Connect fuel feed hose (fuel pump to injector)

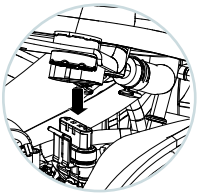

Connect fuel level sensor and fuel pump connector to wiring harness

C

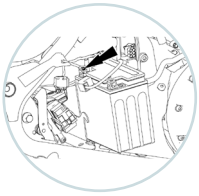

Position battery in carrier and connect positive (+) and negative (-) terminals.
(Ensure ignition and stop switches are in OFF position before connecting battery cables)

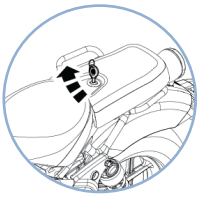

Assemble seat



Assemble side panel LH and RH

5.4 Engine Assembly to Frame

5.4.1. Cradle Assembly Frame

⚠ WARNING

DO NOT tighten bolts during initial installation.

NOTE

- *Ensure motorcycle is upright on a firm and flat surface.*
- *Ensure the front and rear wheels are clamped firmly to motorcycle ramp.*
- *Slide the cradle frames with engine into main frame only from the LH side and with rear end of engine into mainframe first.*
- *Ensure frame adjusters at rear end of mainframe and all other mounting holes are aligned correctly with cradle frames for ease of assembly.*
- *Lift engine with cradle frame into mainframe by suitable supporting from the bottom of engine.*

- Support engine suitably and firmly on a flat jack and ensure it is stable.
- Locate the head mount bracket **(a)**.

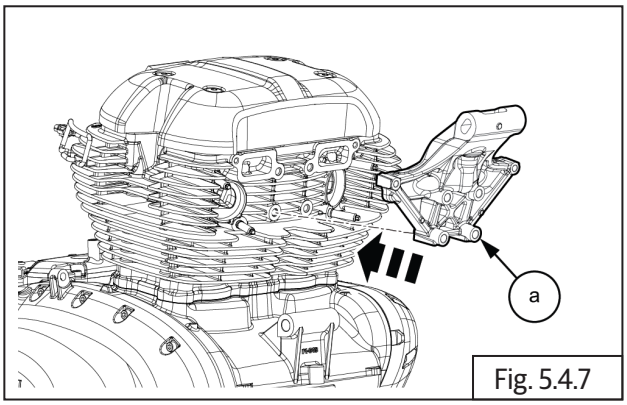

Fig. 5.4.7

- Tighten 4Nos hex head bolts **(M8) (a)** from head mount bracket**.**

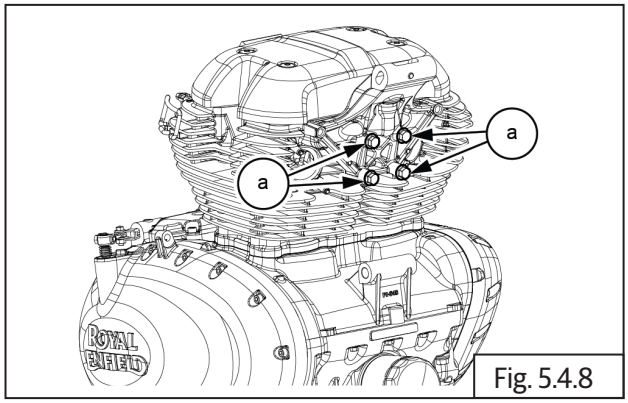

Fig. 5.4.8

	12 mm Socket with Ratchet
Torque	30 N-m / 3 kgf-m

- Tighten 2Nos hex head bolts **(M6) (a)** from head mount bracket.

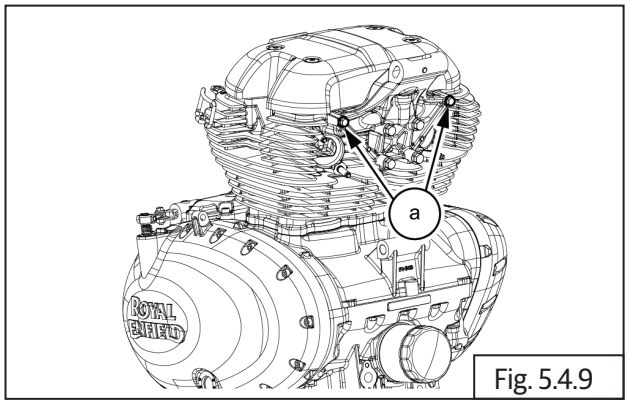

Fig. 5.4.9

	10 mm Socket with Ratchet
Torque	10 N-m / 1 kgf-m

- Locate jack **(a)** along with engine **(b)** below the frame.

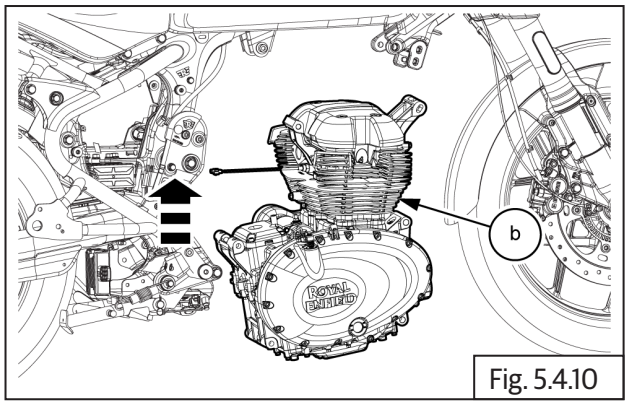

Fig. 5.4.10

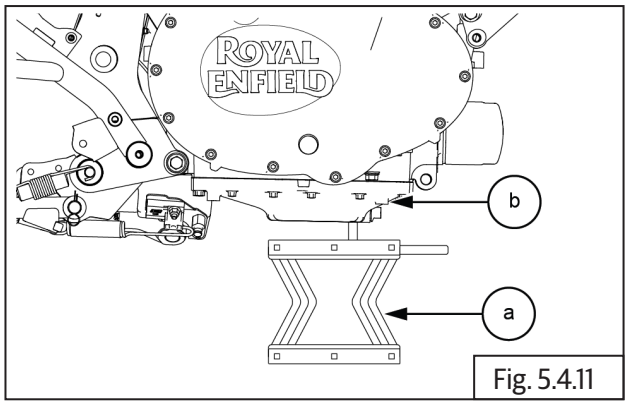

Fig. 5.4.11

- Lift the jack slowly and align mounting holes **(a)** of frame with mounting holes on engine.

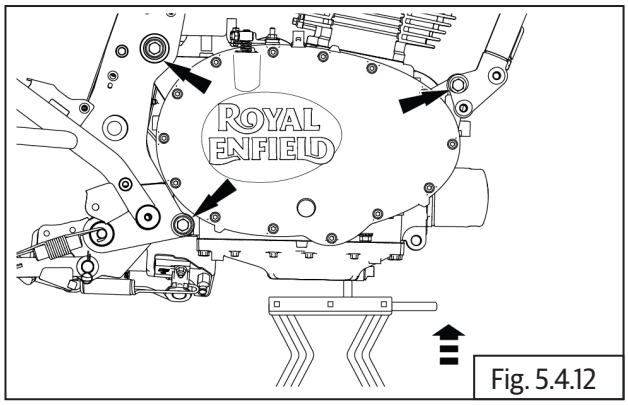

Fig. 5.4.12

- Place special tool on adjuster **(a)** and gently adjust till frame holds engine properly

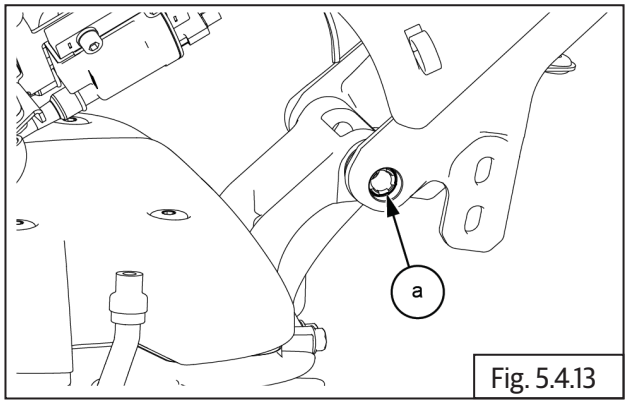

Fig. 5.4.13

SPL	Part No:ST30268/a
	Part Name: Frame Adj OD 16.7/ID 13 mm-Engine with Ratchet

- Lift the jack slowly and align mounting holes **(a)** of frame with mounting holes on engine.
- Place special tool on adjuster and gently adjust till frame holds engine properly

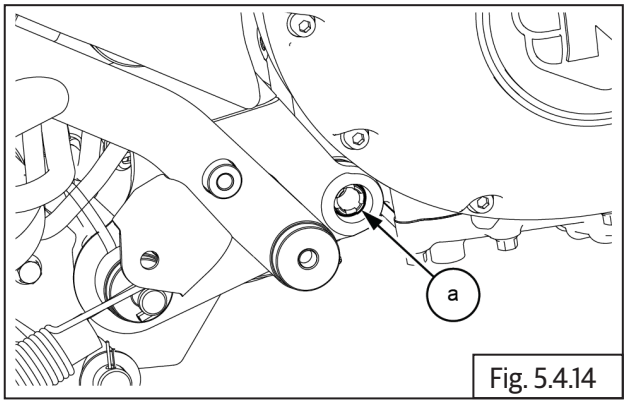

Fig. 5.4.14

SPL	Part No:ST30268/a
	Part Name: Frame Adj OD 16.7/ID 13 mm-Engine with Ratchet

- Lift the jack slowly and align mounting holes **(a)** of frame with mounting holes on engine.
- Place special tool on adjuster and gently adjust till frame holds engine properly

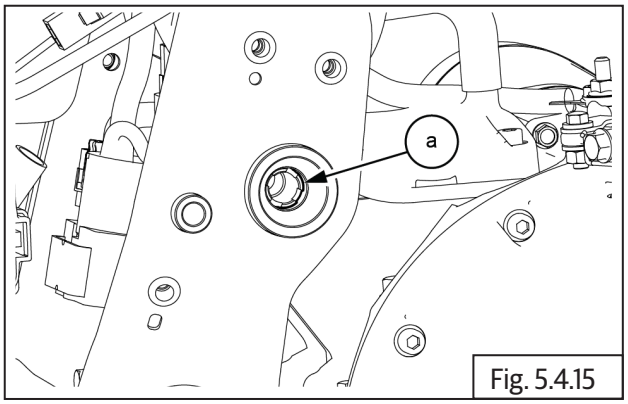

Fig. 5.4.15

SPL	Part No:ST30268/a
	Part Name: Frame Adj OD 16.7/ID 13 mm-Engine with Ratchet

- Insert Hex bolt and nut **(M10) (a)** along with washer into RH top mainframe **(b)**. **DO NOT TIGHTEN FULLY**

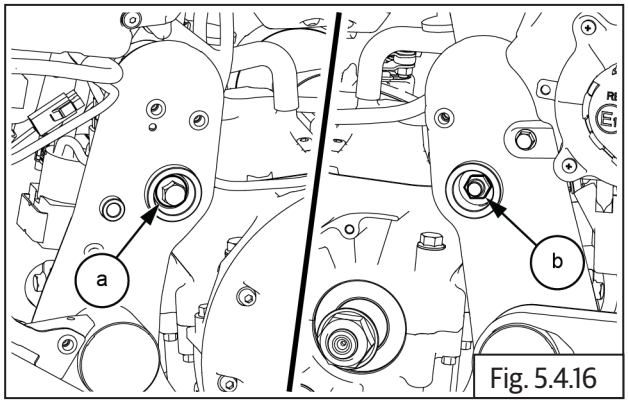

Fig. 5.4.16

	14 mm Socket with Ratchet

- Insert Hex bolt and nut **(M10) (a)** along with washer into RH bottom mainframe **(b)**.**DO NOT TIGHTEN FULLY**.

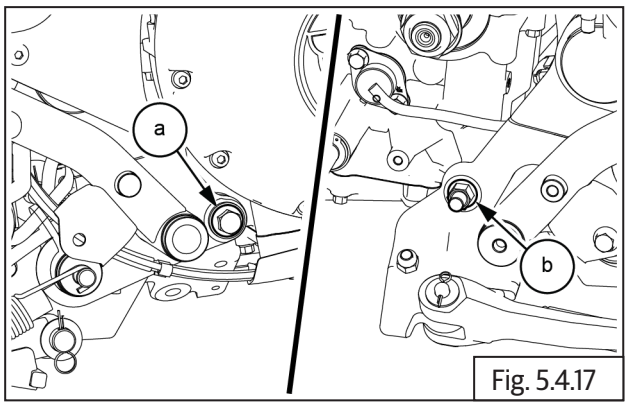

Fig. 5.4.17

	14 mm Socket with Ratchet

- Insert Hex bolt and nut **(M10) (a)** along with washer into RH top mainframe **(b)**.**DO NOT TIGHTEN FULLY**.

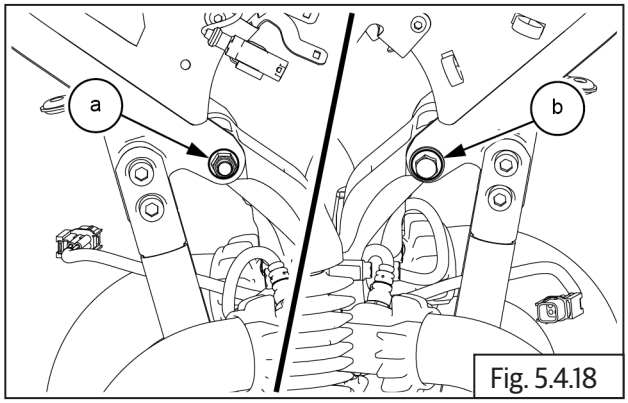

Fig. 5.4.18

	14 mm Socket with Ratchet

- Locate and alighn the front LH and RH cradle frame **(a)** on engine front .

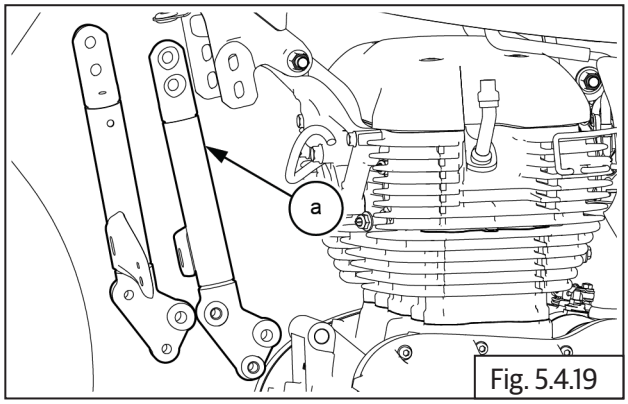

Fig. 5.4.19

- Insert 1 Nos. Hex socket head bolts **(M10) (a)** with nut **(b)** on LH and RH cradle frame **DO NOT TIGHTEN FULLY**.

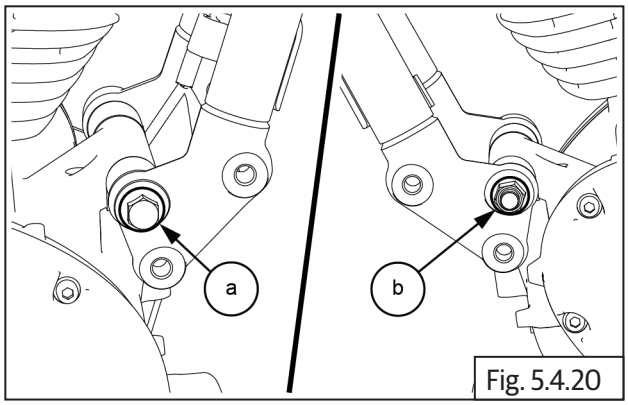

Fig. 5.4.20

	14 mm Socket with Ratchet

- Insert 4 Nos. Hex socket head bolts **(M10) (a)** on LH and RH holding cradle frame top on main frame .**DO NOT TIGHTEN FULLY**.

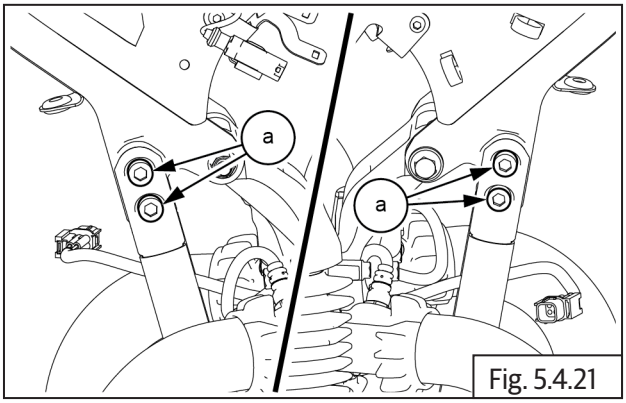

Fig. 5.4.21

	8 mm Allen socket with Ratchet

- Locate the LH **(a)** and RH **(b)** steady brackets on top frame .

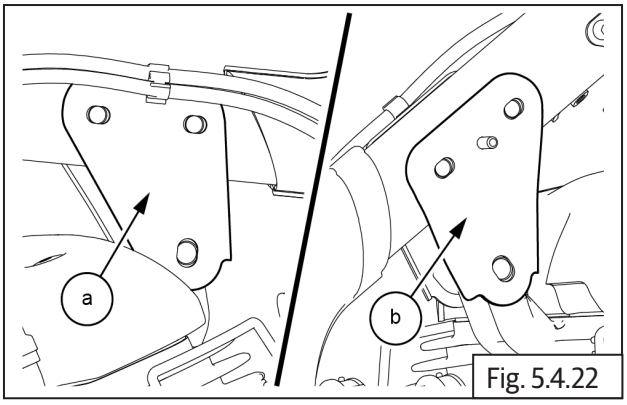

Fig. 5.4.22

- Locate and tighten 2 Nos. Hex flange head bolts **(M8) (a)** with nut **(b)** on LH and RH steady brackets

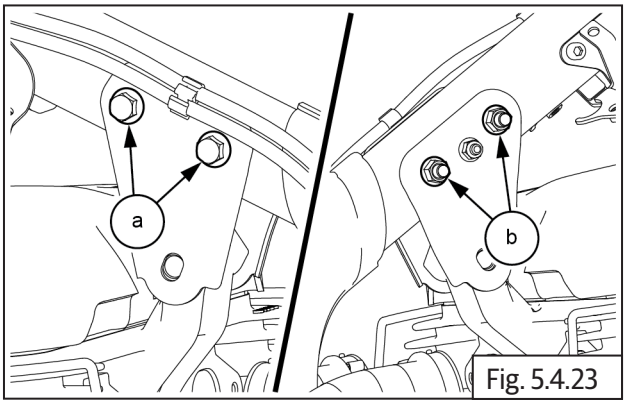

Fig. 5.4.23

	12 mm Socket with Ratchet
Torque	30 N-m / 3.0 kgf-m

- Locate and tighten Hex socket head bolt **(M8) (a)** on RH side and hold hex nut on LH **(b)**.**DO NOT TIGHTEN FULLY.**

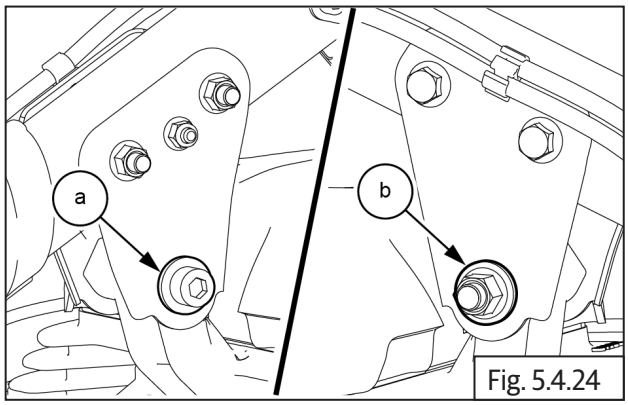

Fig. 5.4.24

	6 mm Allen key
	14 mm Socket with Ratchet

5.4.2. Rear Top Engine Mountings

- Tighten Hex bolt and nut **(M10) (a)** along with washer into RH top mainframe **(b)**.

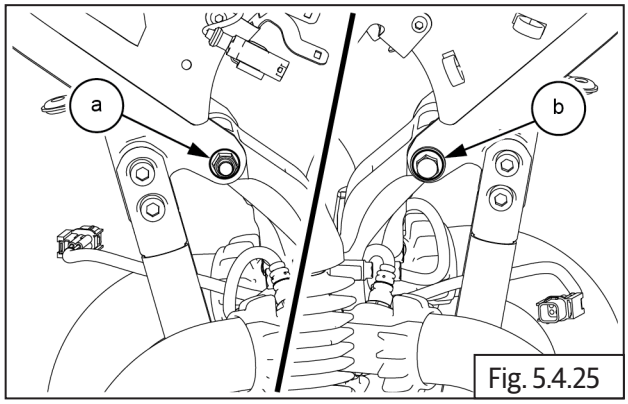

Fig. 5.4.25

	14 mm Socket with Ratchet
Torque	45 N-m / 4.5 kgf-m

- Tighten Hex bolt and nut **(M10) (a)** along with washer into RH top mainframe **(b)**.

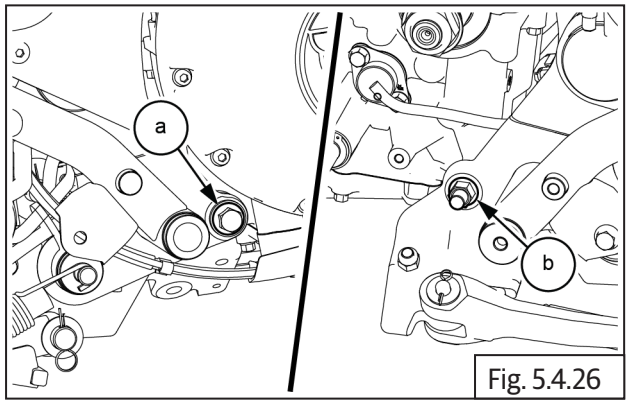

Fig. 5.4.26

	14 mm Socket with Ratchet
Torque	45 N-m / 4.5 kgf-m

5.4.3. Rear Frame Bottom Mountings

- Tighten Hex bolt and nut **(M10) (a)** along with washer into RH bottom mainframe **(b)**.

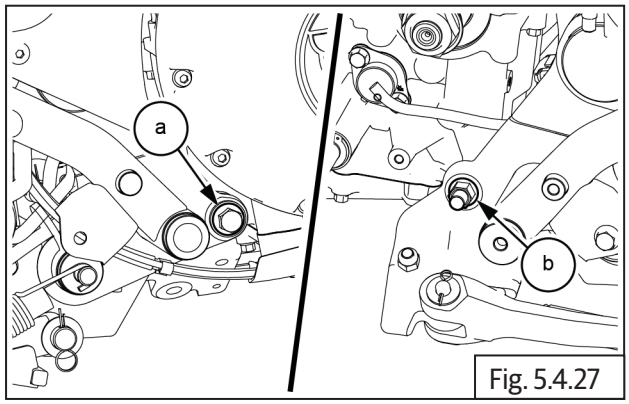

Fig. 5.4.27

	14 mm Socket with Ratchet
Torque	45 N-m / 4.5 kgf-m

5.4.4. Cradle Frame Top Mountings

Cradle Frame Top Mountings from Main Frame

- Tighten 4 Nos. Hex socket head bolts **(M10) (a)** on LH and RH holding cradle frame top on main frame .

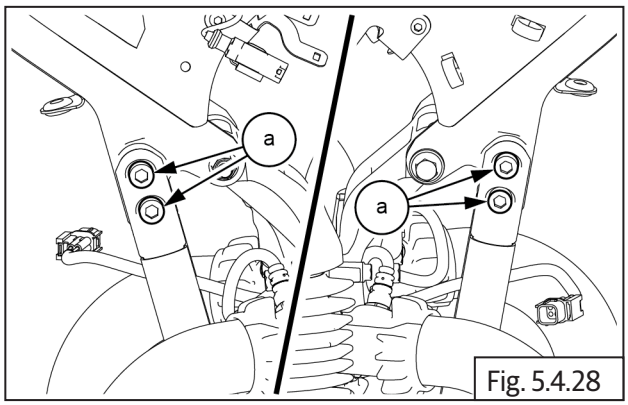

Fig. 5.4.28

	8 mm Allen socket with Ratchet
Torque	45 N-m / 4.5 kgf-m

- Tighten 1 Nos. Hex socket head bolts **(M10) (a)** with nut **(b)** on LH and RH from top frame.

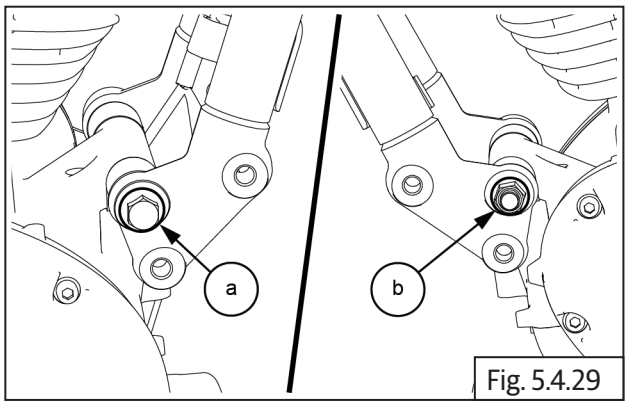

Fig. 5.4.29

	14 mm Socket with Ratchet
Torque	45 N-m / 4.5 kgf-m

5.4.5. Engine Steady Bracket

- Tighten Hex socket head bolt **(M8) (a)** on RH side and hold hex nut on LH **(b)**.

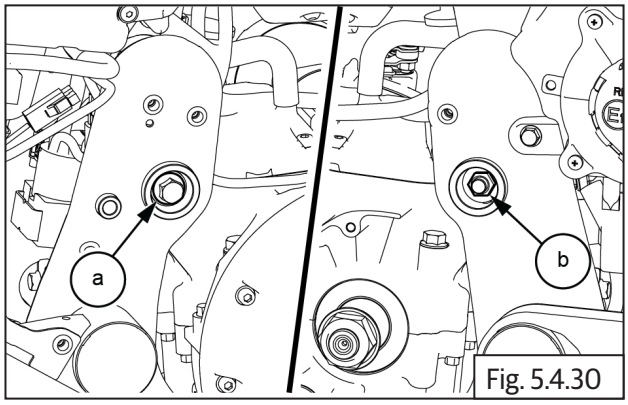

Fig. 5.4.30

	6 mm Allen key
	14 mm Socket with Ratchet
	45 N-m / 4.5 kgf-m

5.4.6. Gear Position Indicator Sensor

- Connect gear position sensor **(a)** to connector **(b)** located behind engine.

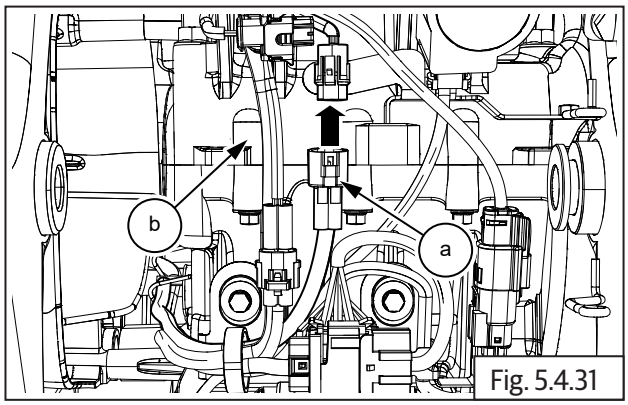

Fig. 5.4.31

5.4.7. Rear Chain to FD sprocket

- On a point half-way along the chain run between the sprockets the maximum displacement (shown as A below) is measured. This value should be in the range of 20-30mm.

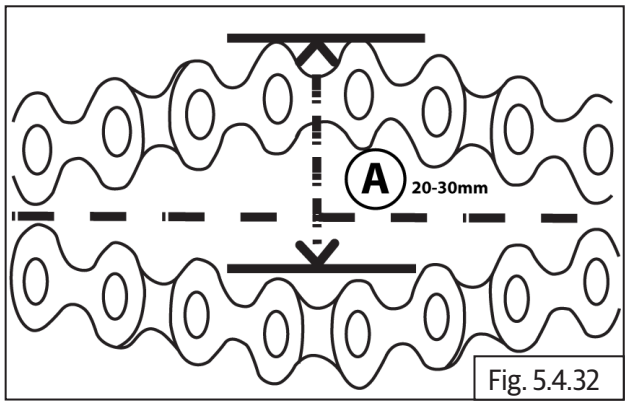

Fig. 5.4.32

- Inspect chain free play at 3 locations using a ruler. Free play for drive chain **(a)** should be between 20 mm to 30 mm.

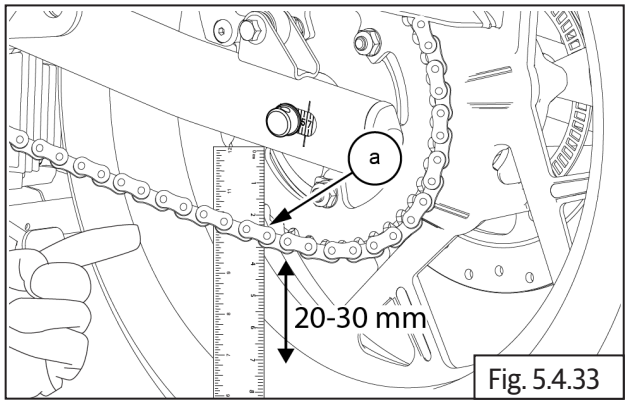

Fig. 5.4.33

- Adjust rear chain tension to specification: 20 mm to 30 mm.
- Tighten rear wheel axle nut.

5.4.8 FD Sprocket Cover

- Assemble FD sprocket cover on crankcase LH.
- Locate 3 Nos. Hex socket head bolts **(M6) (a)** on FD sprocket cover and tighten in a crisscross pattern to specified torque.

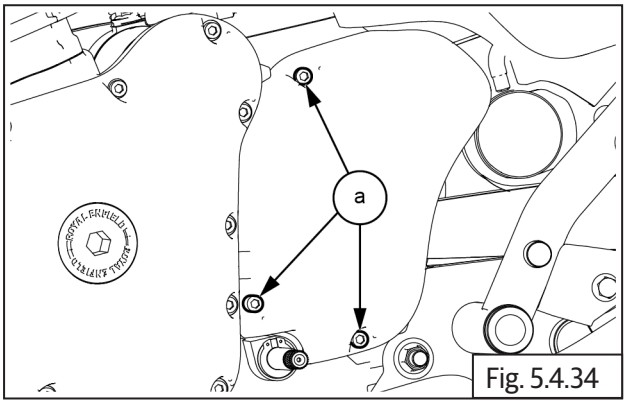

Fig. 5.4.34

	5 mm Allen socket and Torque wrench
Torque	10 N-m/1 kgf-m

5.4.9. Gear Shift Linkage (Control Plate (LHS)

- Install the gear shift pedal **(a)** along with bush **(b)** and bolt **(c)** into the LH control plate.

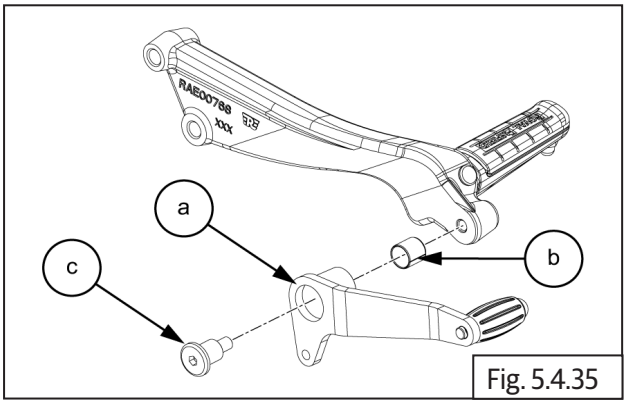

Fig. 5.4.35

- Locate and tighten allen head bolt **(a) (M8)** into gear shift pedal.

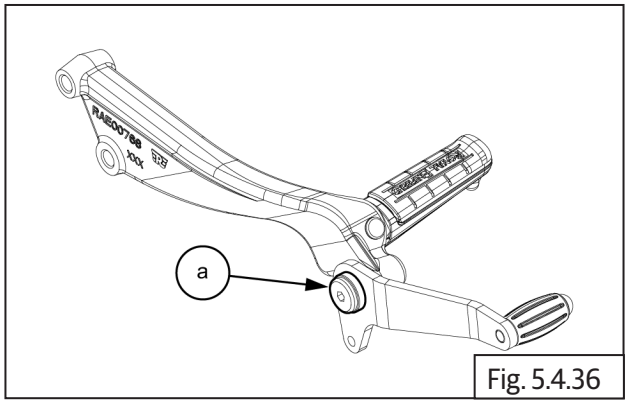

Fig. 5.4.36

	6 mm Allen Socket with Ratchet
Torque	22 N-m / 2.2 kgf-m

- Locate and align the hole of LH control plate **(a)** into the frame

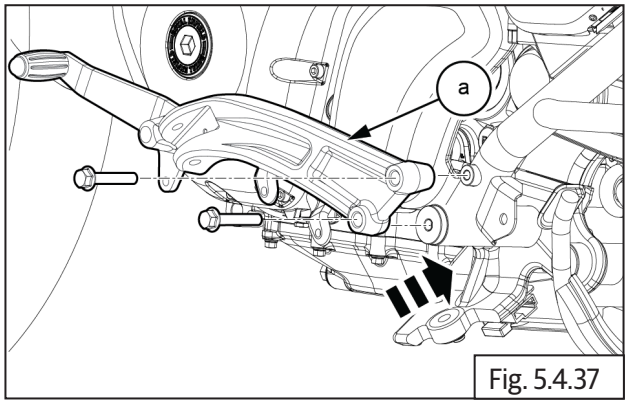

Fig. 5.4.37

- Locate and tighten 2 Nos hex bolts **(a) (M10)** into LH control plate.

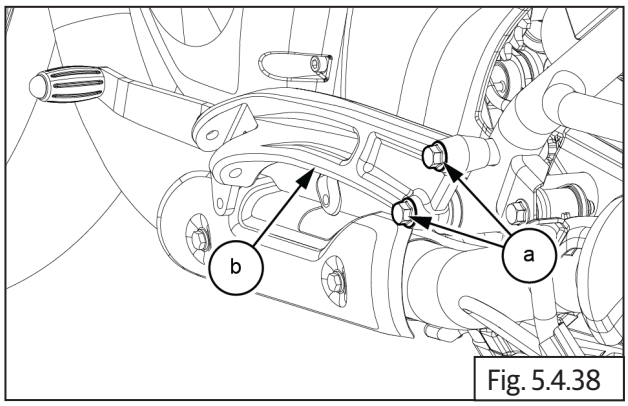

Fig. 5.4.38

	14 mm Socket with Ratchet
Torque	30 N-m / 3.0 kgf-m

- Locate gear shift linkage **(a)** into LH control plate and knuckle.

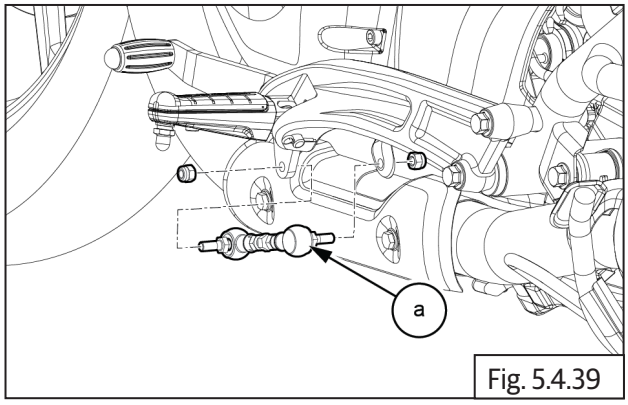

Fig. 5.4.39

- Locate and tighten 2 Nos hex nut **(a) (M6)** into gear shift linkage.

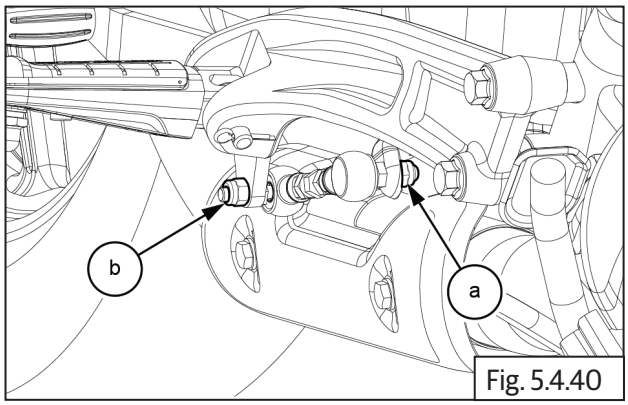

Fig. 5.4.40

	10 mm Socket with Ratchet
Torque	10 N-m / 1.0 kgf-m

5.4.10 Breather Hose Connection

Breather Hose Connection to Breather Box to Air Filter

- Insert the shorter end of hose **(b)** on the tube in breather box **(c)**.
- Position the clip **(a)** on hose correctly.

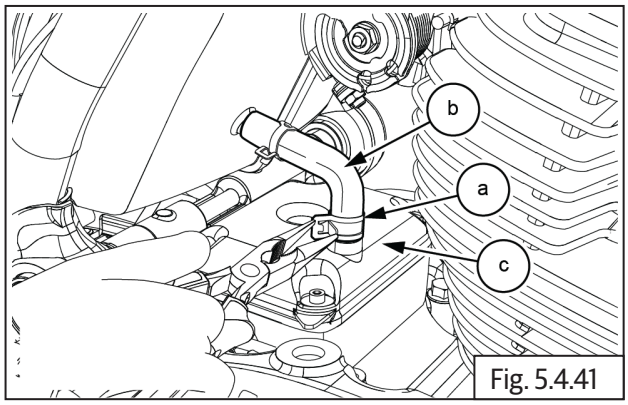

Fig. 5.4.41

	Nose plier

- Locate the other end of hose **(b)** on the tube in air filter box **(c)** and position the clip **(a)** over the breather hose correctly.

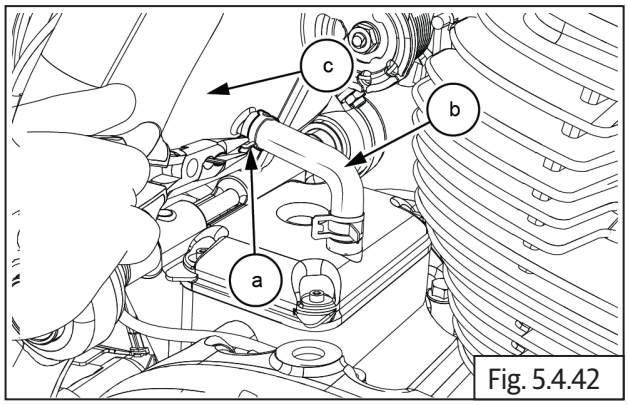

Fig. 5.4.42

	Nose plier

5.4.11. Spark Plug Suppressor Caps

Spark Plug Suppressor Caps on LH and RH Cylinder Heads

- Locate spark plug suppressor cap **(a)** on spark plug in LH cylinder head **(b)**.

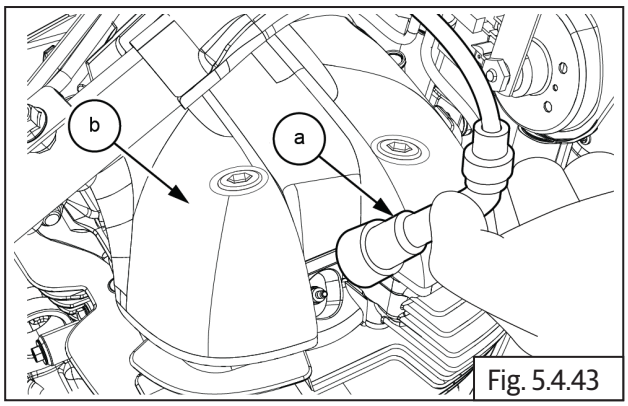

Fig. 5.4.43

- Locate spark plug suppressor cap **(a)** on spark plug in RH cylinder head **(b)**.

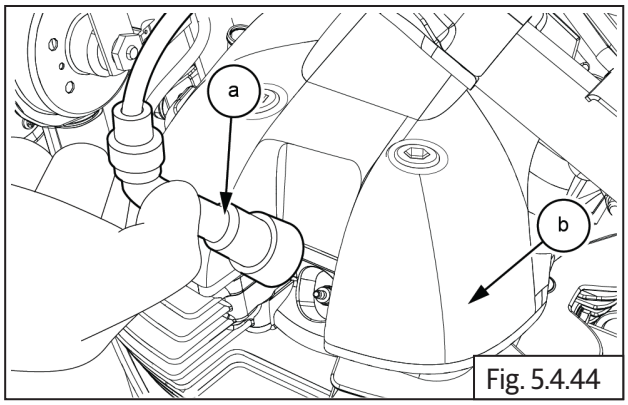

Fig. 5.4.44

5.4.12. Starter Motor Connections

- Connect starter motor negative (-) cable **(a)** to terminal.
- Assemble spring washer and 2 Nos. Hex flange head bolts **(M6) (b)** into terminal and tighten firmly.
- Slide protective cap over terminal on starter motor.

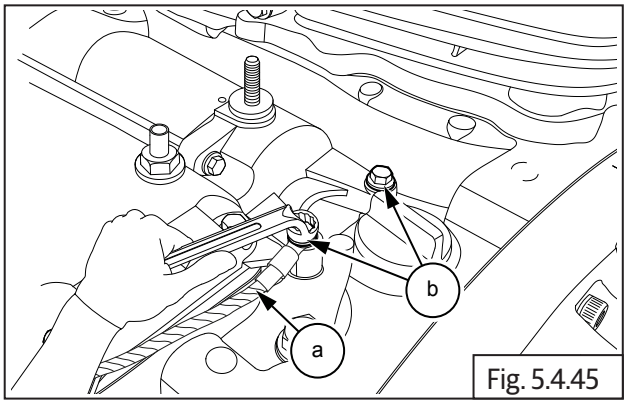

Fig. 5.4.45

	10 mm Socket with Ratchet
Torque	12 N-m/1.2 kgf-m

- Connect positive (+) cable **(a)** to starter motor terminal. Assemble Hex nut **(M6) (b)** and tighten firmly, duly ensuring the cable/terminal does not rotate.

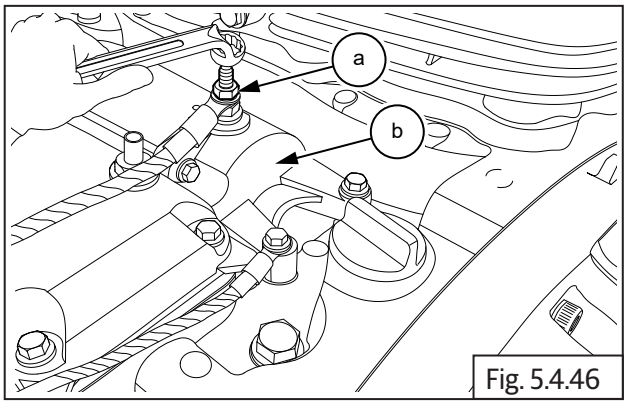

Fig. 5.4.46

	10 mm Double end spanner

5.4.13. Magneto/Side Stand Switch Connectors

- Connect magneto sensor connector **(a)** located on rear bottom of engine **(b)**.

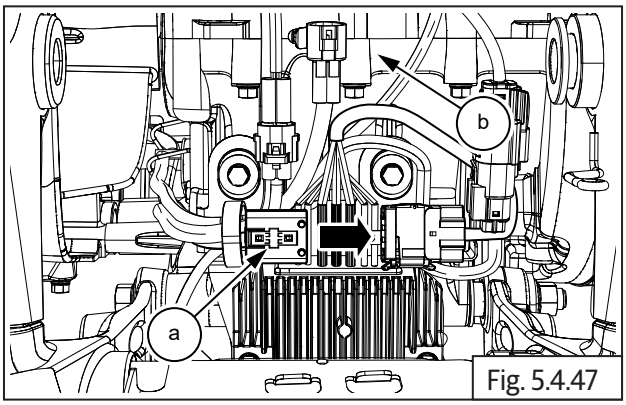

Fig. 5.4.47

- Connect side stand switch connector **(a)** located on rear top of engine **(b)**.

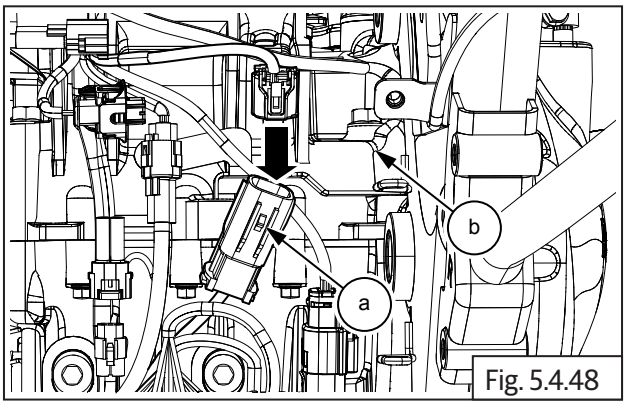

Fig. 5.4.48

5.4.14. Exhaust Pipe on Cylinder Head RH

NOTE
• Refer below image for tighten sequence before and after installing exhaust assembly on LH and RH side.

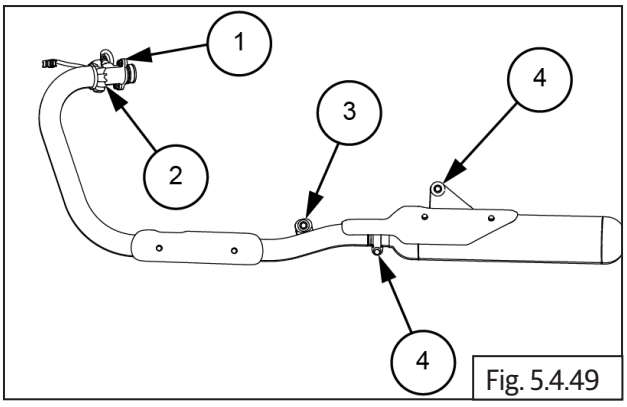

Fig. 5.4.49

5.4.15. Exhaust Header Pipe

- Locate exhaust gasket **(a)** into cylinder head

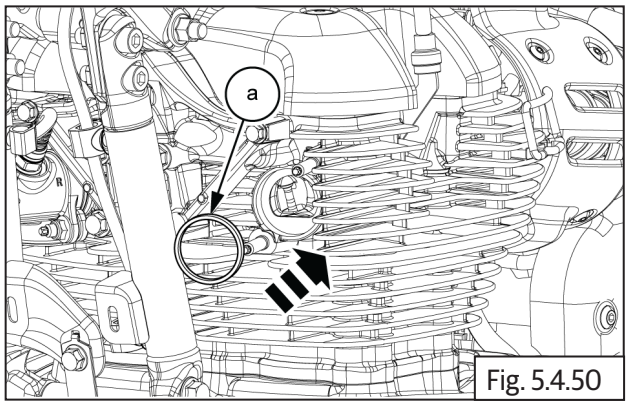

Fig. 5.4.50

- Locate 2 nos mounting fins **(a)** into header pipe

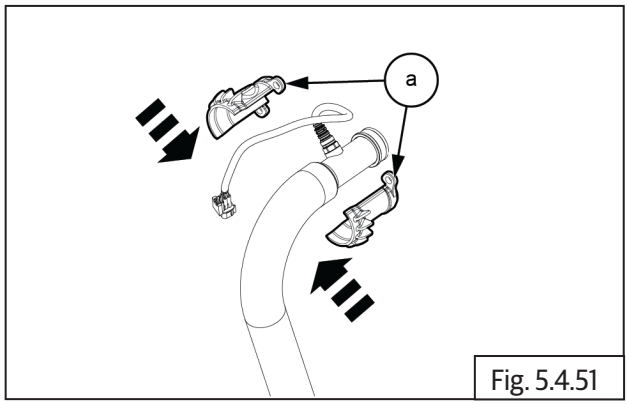

Fig. 5.4.51

- Locate exhaust pipe **(a)** into exhaust manifold on the cylinder head and ensure the exhaust pipe flange is properly located on the studs.

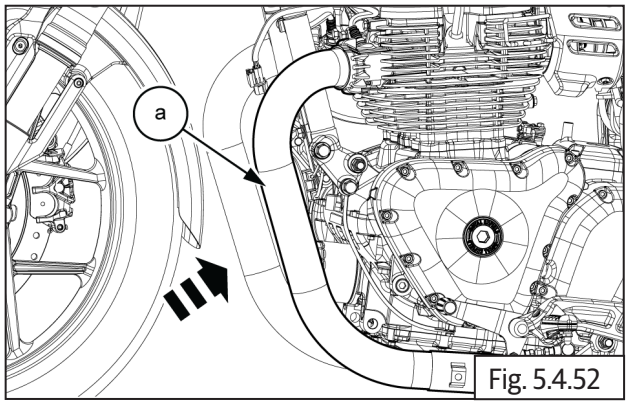

Fig. 5.4.52

- Assemble 2 nos hex nuts **(M8) (a)** on the studs and hand tight it to align the rear end mounting.

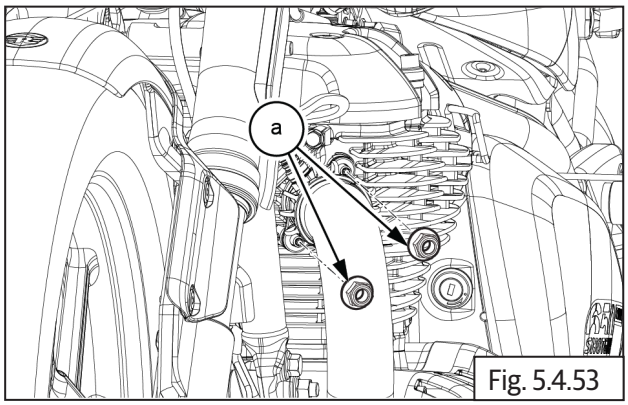

Fig. 5.4.53

	12 mm socket with ratchet
Torque	25 N-m / 2.5 kgf-m

- Locate and tighten header pipe mounting bolt **(a) (M8)** along with two washers **(b)** and two rubber grommets **(c)** on left side of the frame.

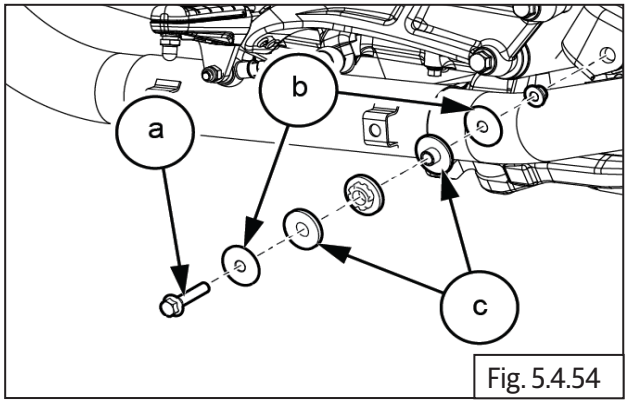

Fig. 5.4.54

	12 mm socket with ratchet
Torque	25 N-m / 2.5 kgf-m

5.4.16. Silencer / muffler

- Locate bracket **(b)** along with bolts **(a)** on exhaust muffler.

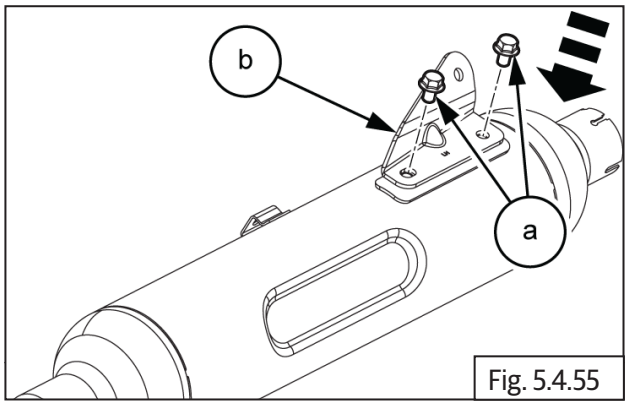

Fig. 5.4.55

- Tighten 2nos bolts **(M8) (a)** on exhaust muffler bracket.

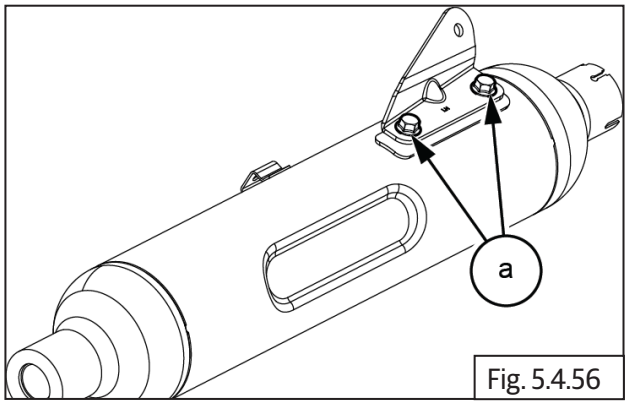

Fig. 5.4.56

	12 mm socket with ratchet
Torque	25 N-m / 2.5 kgf-m

- Locate the gasket **(a)** into header pipe .

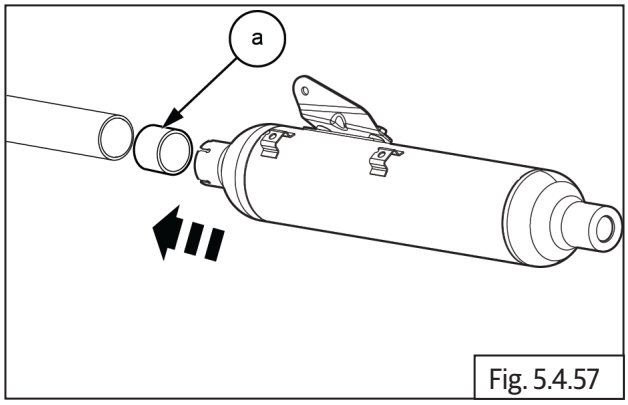

Fig. 5.4.57

- Insert the exhaust muffler **(a)** into header pipe.

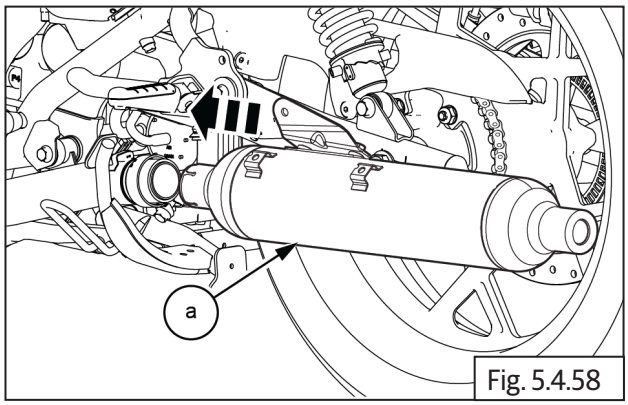

Fig. 5.4.58

- Tighten flange bolt **(M8) (a)** on exhaust muffler.

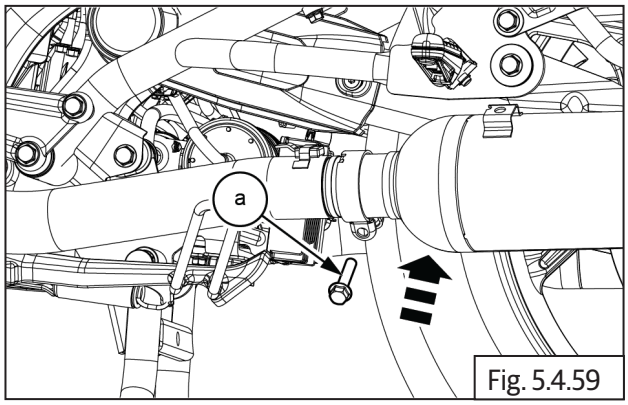

Fig. 5.4.59

- Refer below image for both **LH** and **RH** clamp orientation .

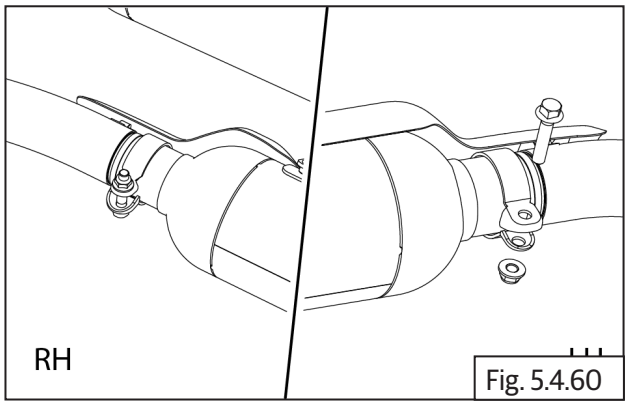

Fig. 5.4.60

	12 mm socket with ratchet
Torque	32 N-m / 3.2 kgf-m

- Locate and tighten muffler mounting bolt **(a) (M8)** along with two washers **(b)** and two rubber grommets **(c)** on left side of the frame.

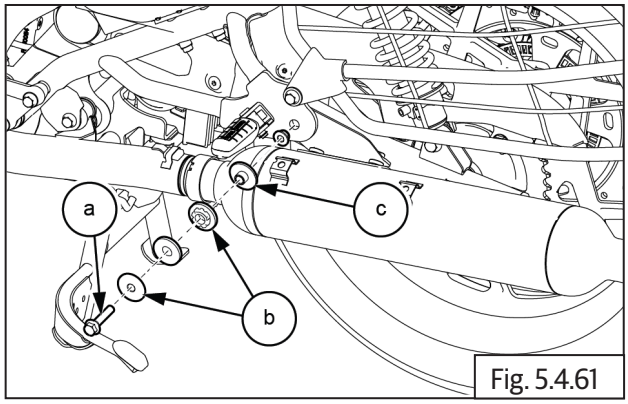

Fig. 5.4.61

	12 mm socket with ratchet
Torque	25 N-m / 2.5 kgf-m

- Locate the front silencer guard **(a)** on the header pipe ensure holes aligned.

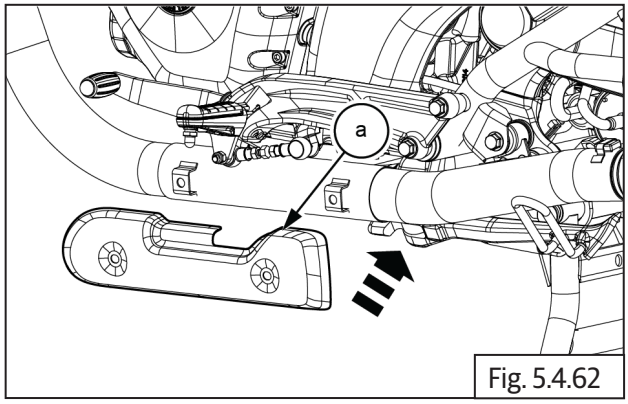

Fig. 5.4.62

- Tighten 2 nos hex socket bolts **(M6) (a)** on front silencer guard at the header pipe end.

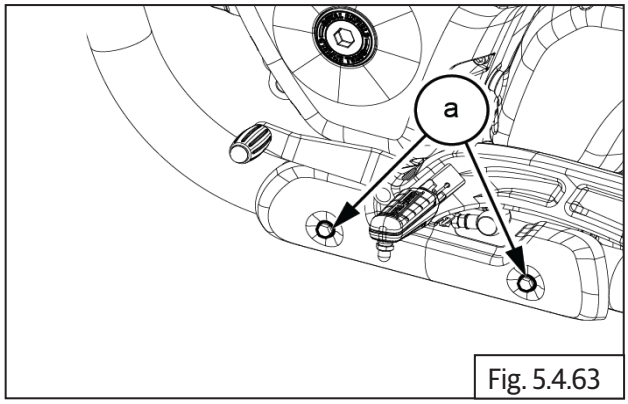

Fig. 5.4.63

	10 mm socket with ratchet
Torque	10 N-m / 1.0 kgf-m

- Slighty slide and fix rear silencer guard **(b)** with bolts **(a)** on exhaust muffler.

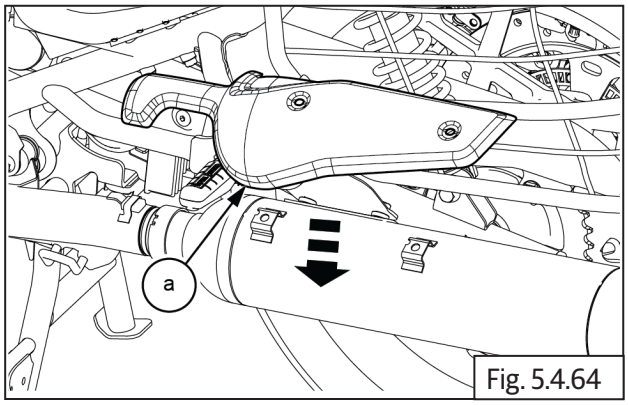

Fig. 5.4.64

- Tighten 2 nos hex socket bolts **(M6) (a)** on rear silencer guard at muffler end.

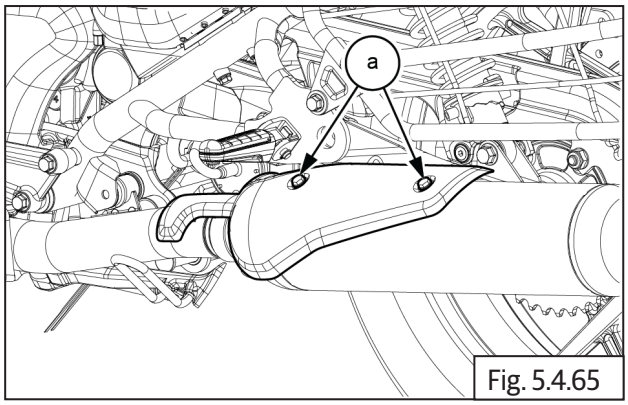

Fig. 5.4.65

	10 mm socket with ratchet
Torque	10 N-m / 1.0 kgf-m

5.4.17 Hego/Oxygen Sensor Connectors

- Ensure Hego/oxygen sensors are tightened fully on exhaust pipes LH and RH.
- Connect LH and RH Hego/Oxygen sensor connectors **(a)**.
- Ensure connectors are locked properly. (There is a "Click" sound when locked).

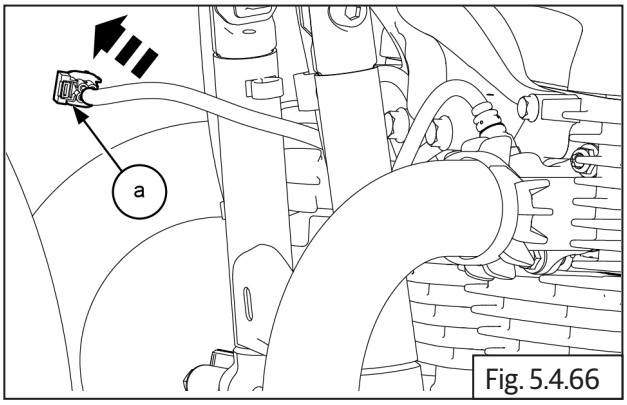

Fig. 5.4.66

5.4.18. Throttle Body

- Ensure clips **(a)** are in position on inlet manifolds and loosened sufficiently.
- Locate throttle body **(b)** on the inlet manifold rubber flanges **(c)** and ensure it is properly seated on both LH and RH inlet manifolds.

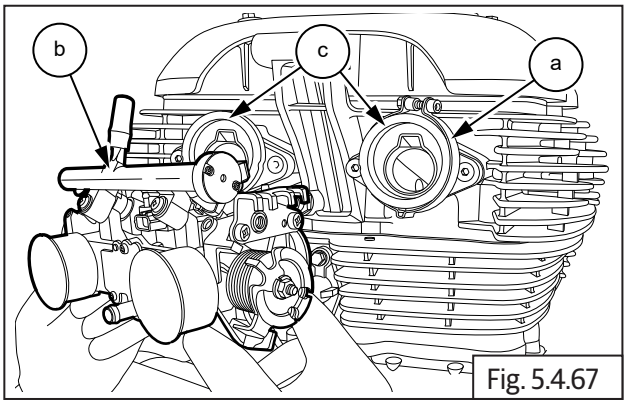

Fig. 5.4.67

- Tighten both clips **(a)** sufficiently over inlet manifold.
- Ensure clips are in position on air filter hoses and loosened sufficiently.
- Locate air filter housing **(b)** on throttle body **(c)** and ensure it is properly seated on both LH and RH of throttle body.

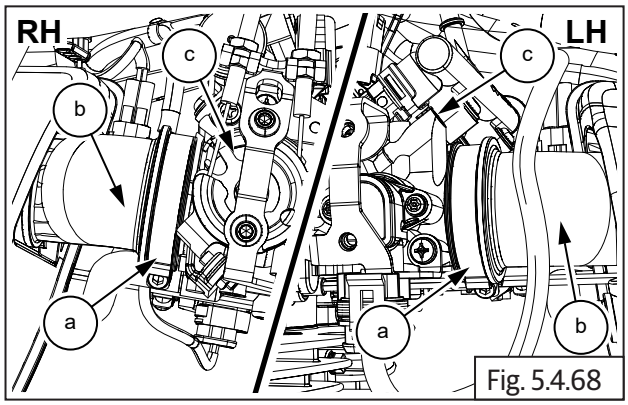

Fig. 5.4.68

- Tighten both clips **(a)** sufficiently over air filter hose.

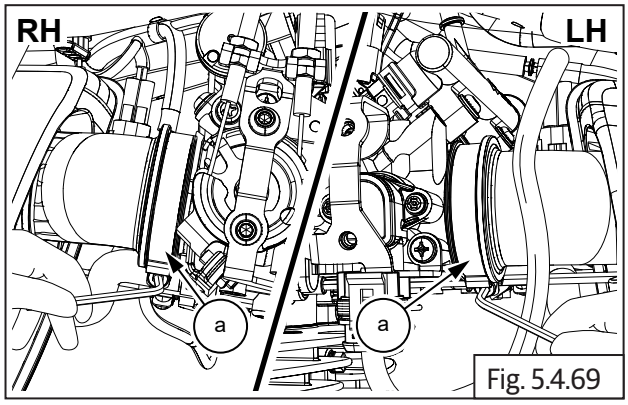

Fig. 5.4.69

5.4.19. Air Filter Housing to Throttle Body

- Tighten worm clips screws **(M4) (a)** from air filter housing **(b)** to throttle body **(c)** on both LH and RH sides.

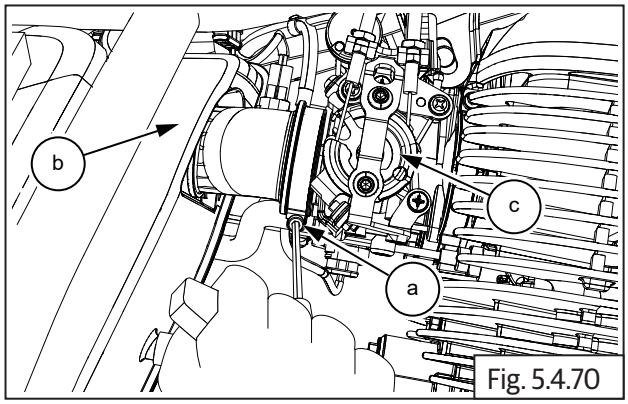

Fig. 5.4.70

	5 mm Allen key

5.4.20. Injector, TPS and Map Connections

- Connect the LH and RH injector connectors **(a)** located on throttle body **(b)**.

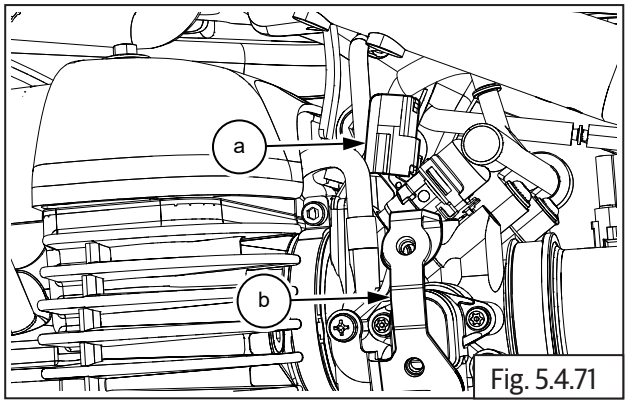

Fig. 5.4.71

- Connect TPS sensor connector **(a)** to sensor **(b)** at bottom of throttle body.

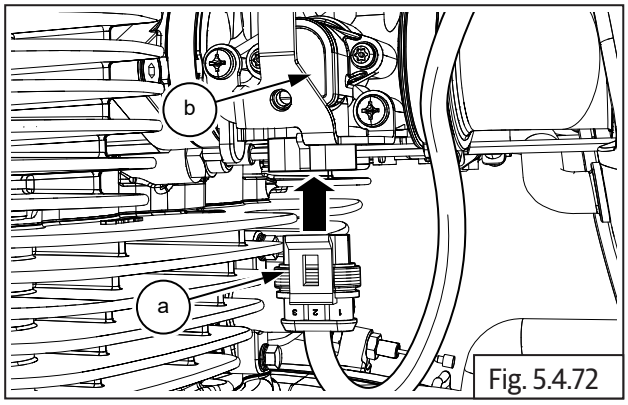

Fig. 5.4.72

- Connect idle speed sensor connector **(a)**.

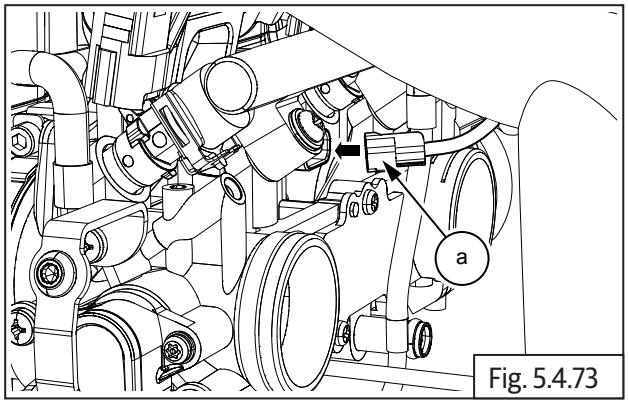

Fig. 5.4.73

- Connect idle EVAP hoses **(a)** into throttle body.

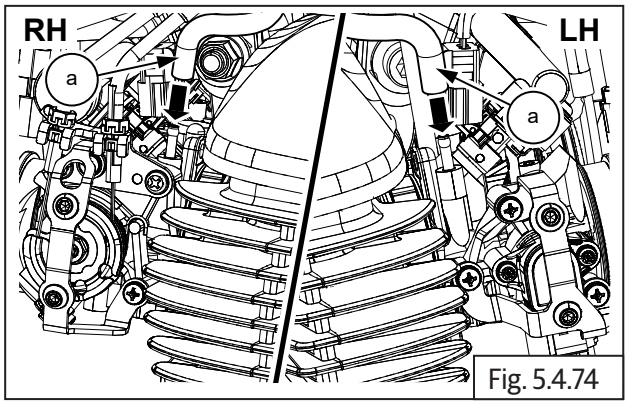

Fig. 5.4.74

5.4.21. Throttle Cables

- Loosen bottom adjuster nuts **(a)** fully from adjusters in inner and outer throttle cables.
- Ensure top adjuster **(b)** nuts are fully threaded into adjusters.
- Slide inner cables **(c)** into slots in throttle bracket and push adjusters completely into throttle bracket till outer lock nuts are resting against bracket.

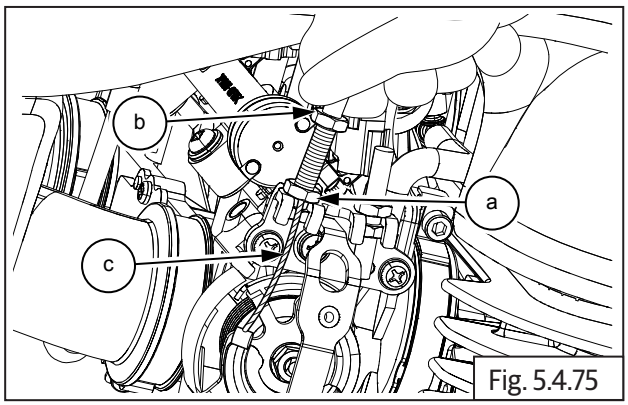

Fig. 5.4.75

- Route throttle cable inner in throttle rotor and position throttle cable end **(a)** in eyelet in throttle rotor **(b)** correctly.

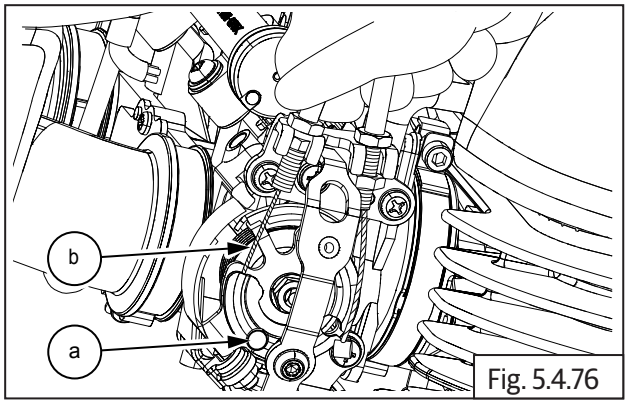

Fig. 5.4.76

- Assemble outer lock nut **(a)** on adjuster in throttle body **(b)**.
- Adjust throttle cable free play as specified and tighten 2 Nos. lock nuts on throttle cable adjuster against bracket.
- Repeat same procedure for return cable.

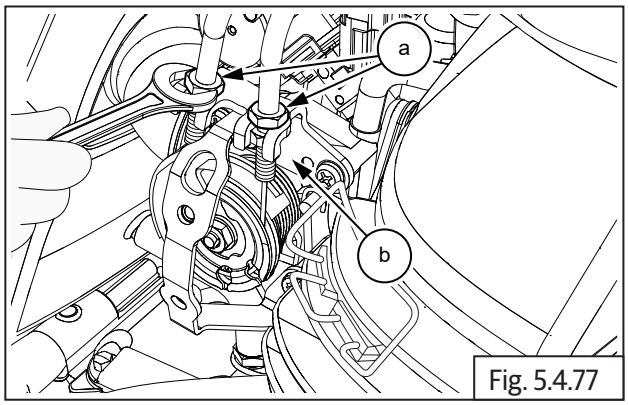

Fig. 5.4.77

	12 mm Double end spanner

5.4.22. Throttle Body Covers on LH and RH

- Locate the LH and RH cover into throttle body **(b)**
- Locate and tighten 6 Nos. allen head screws **(a)** on LH and RH throttle body .

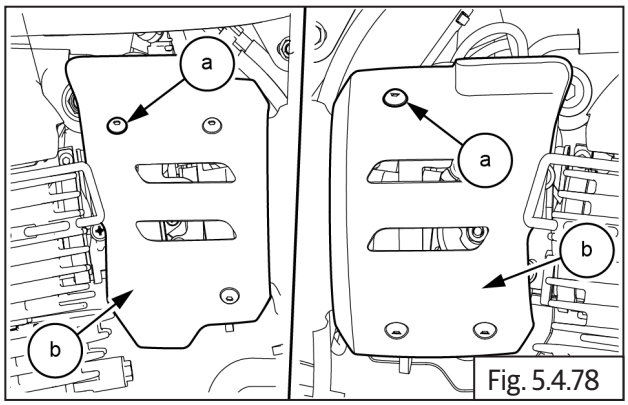

Fig. 5.4.78

	4 mm Allen Socket with Ratchet
Torque	7 N-m / 0.7 kgf-m

5.4.23. Fuel Tank

- Hold and slide fuel tank **(a)** into frame guide and ensure bush in fuel tank are aligned into guide in frame.

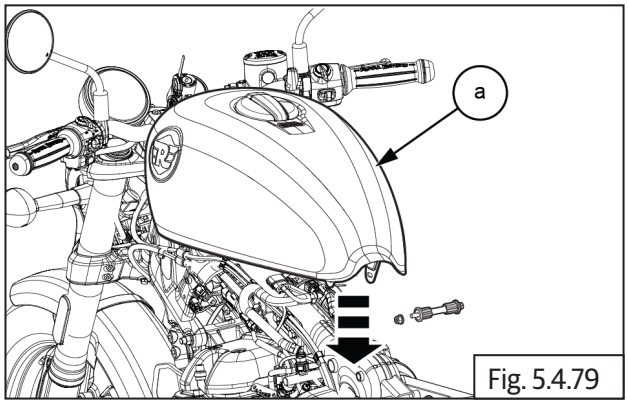

Fig. 5.4.79

5.4.24. EVAP to Fuel Tank Connections

- Connect EVAP connection hose **(a)** to fuel tank .

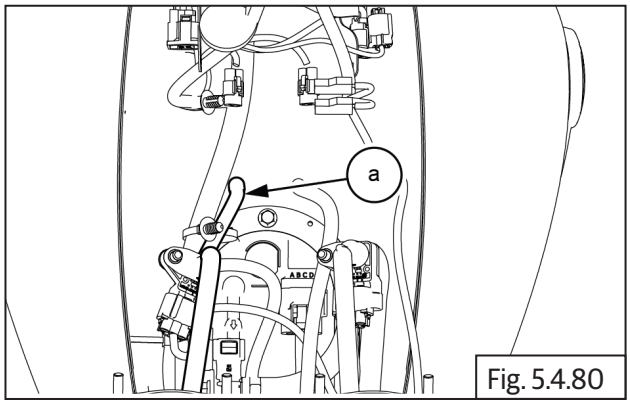

Fig. 5.4.80

5.4.25. Fuel Hose (Fuel Pump to Injector)

- Connect fuel hose **(a)** into quick fix connector **(b)** and ensure lock button is locked with a click sound.

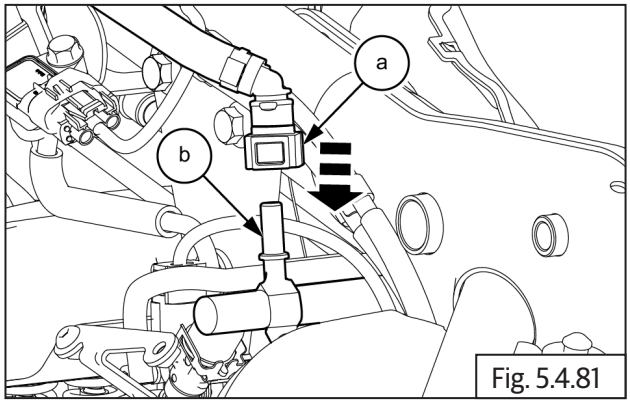

Fig. 5.4.81

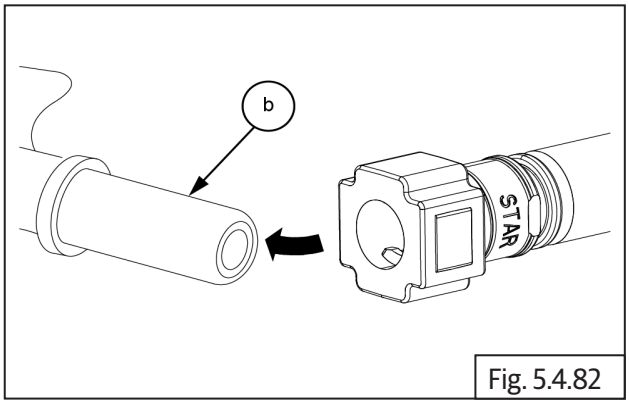

Fig. 5.4.82

NOTE
• *Ensure fuel quick coupler is locked properly. (There should be a "Click" sound when locked)*

5.4.26. Fuel Level Sensor and Fuel Pump

- Connect fuel pump connector **(a)** into fuel pump **(b)**.

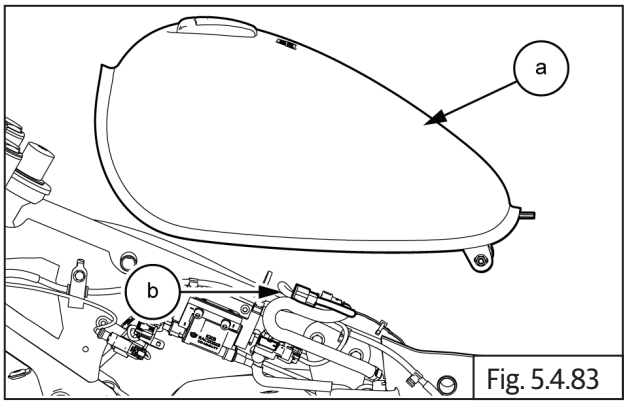

Fig. 5.4.83

- Gently lower the fuel tank into frame.

- Locate and tighten 1 No. Hex head bolt **(M6) (a)** with nut **(b)** on rear end of fuel tank.

NOTE
• *Head of bolt must be on RHS frame. Nut must be on LHS frame*

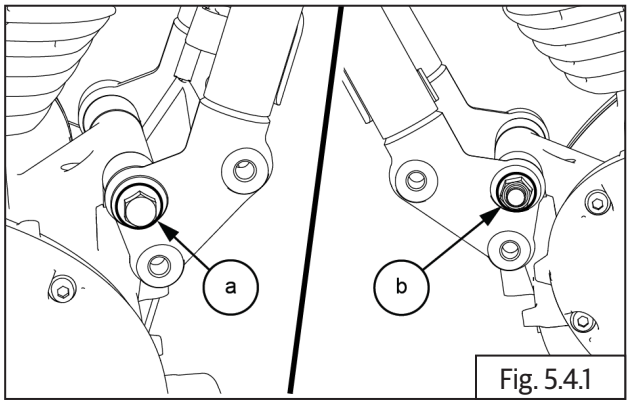

Fig. 5.4.1

	10 mm Socket with Ratchet
Torque	13 N-m / 1.3 kgf-m

5.4.27. Clutch Cable

NOTE
• *Ensure clutch cable is properly routed and retained by all necessary clips.*

- Locate lower end of clutch cable **(a)** into guide **(b)**.

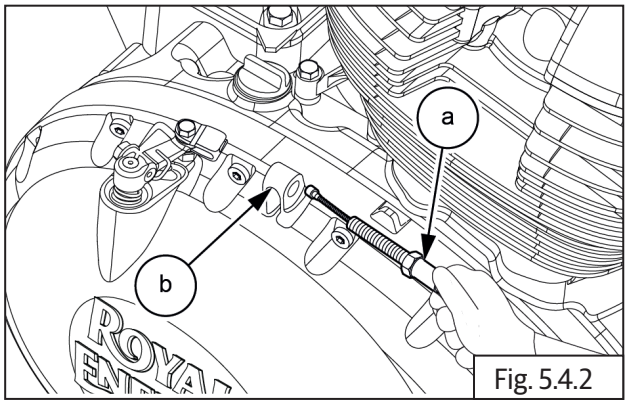

Fig. 5.4.2

- Install outer lock Hex nut **(M8) (a)**.

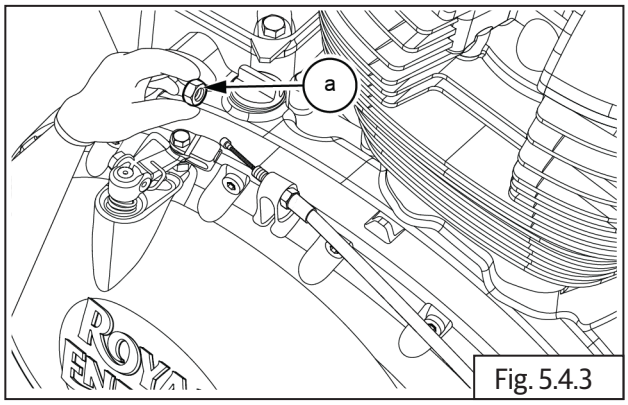

Fig. 5.4.3

- Install rubber grommet **(a)**.

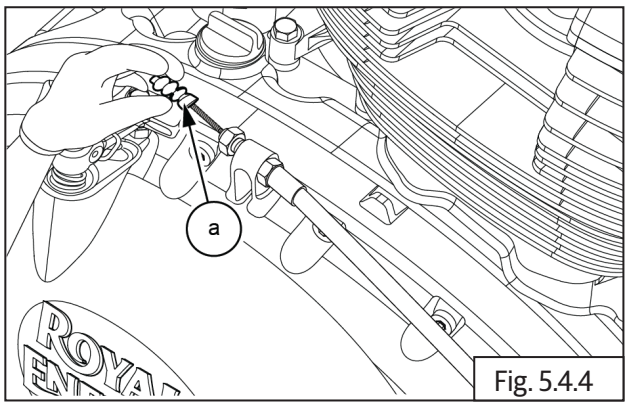

Fig. 5.4.4

- Install inner cable **(a)** into clevis in the clutch release case **(b)**.

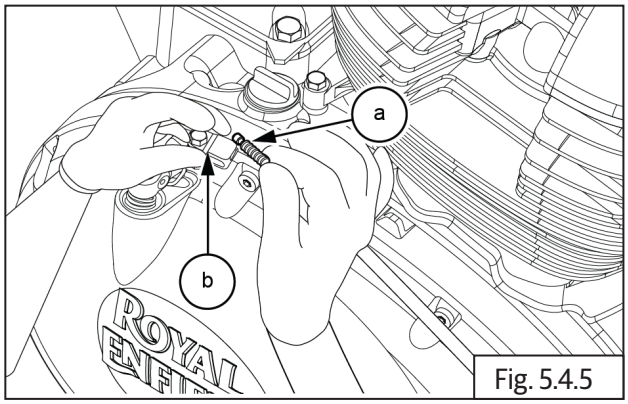

Fig. 5.4.5

- Tighten inner lock Hex nut **(M8) (a)** to specified clutch lever free play of 2 to 3 mm.

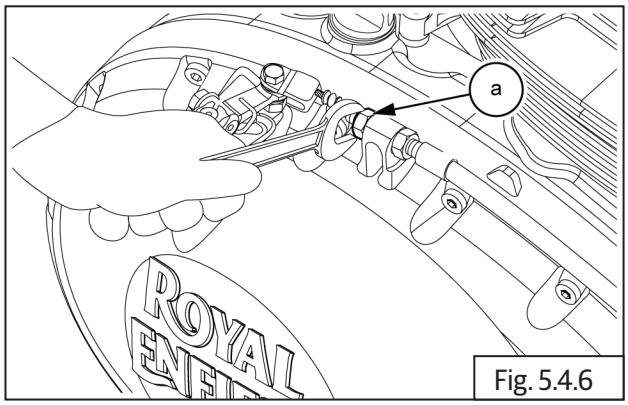

Fig. 5.4.6

	12 mm Double end spanner

- Tighten outer lock nut **(M8) (a)**.

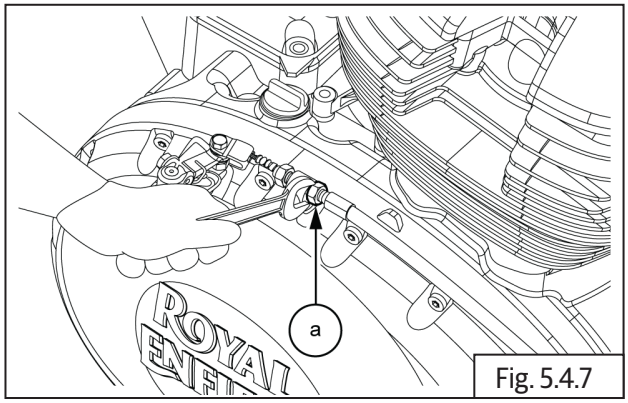

Fig. 5.4.7

	12 mm Double end spanner

5.4.28. Battery Connections

- Locate the battery **(a)** into tray.

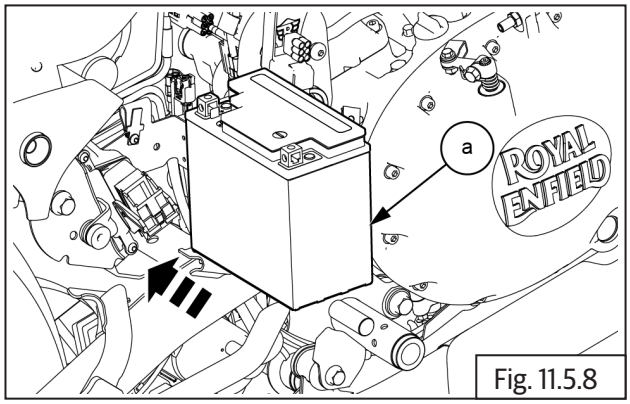

Fig. 11.5.8

- Locate and tighten battery positive (+ ve) terminal bolt **(a)**.

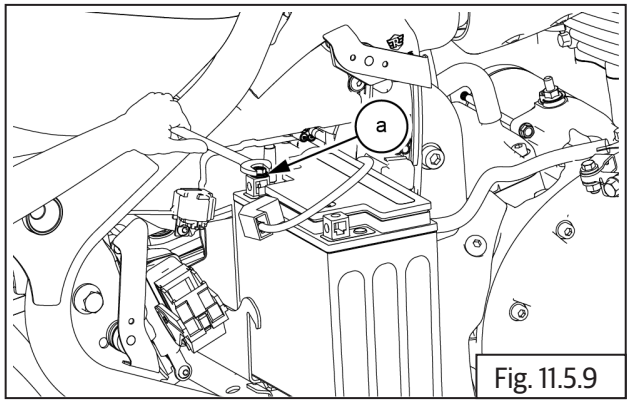

Fig. 11.5.9

	10 mm Double end spanner

- Slightly slide it inward the battery **(a)** for connect (+ ve) terminal bolt.

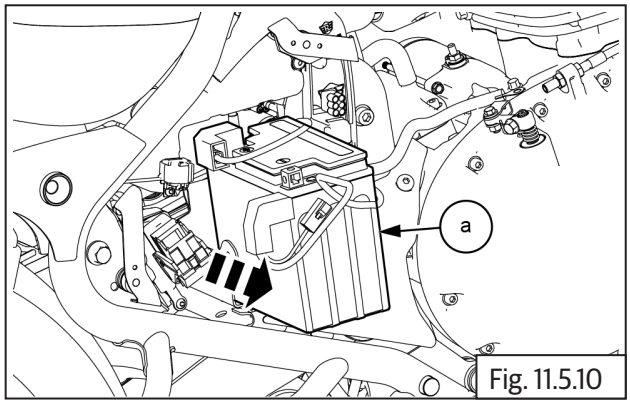

Fig. 11.5.10

- Connect battery negative (- ve) terminal bolt **(a)**.

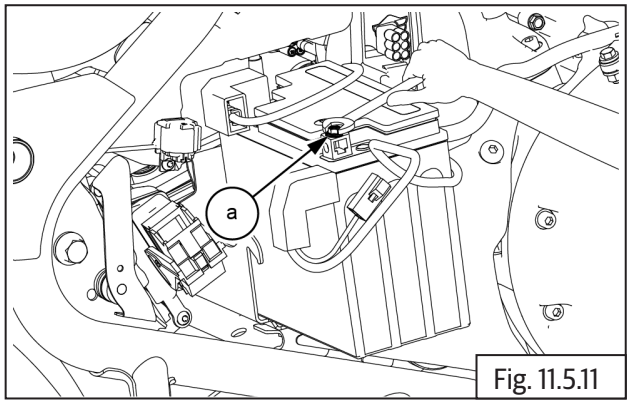

Fig. 11.5.11

	10 mm Double end spanner

- Connect the negative (- ve) coupler **(a)**.

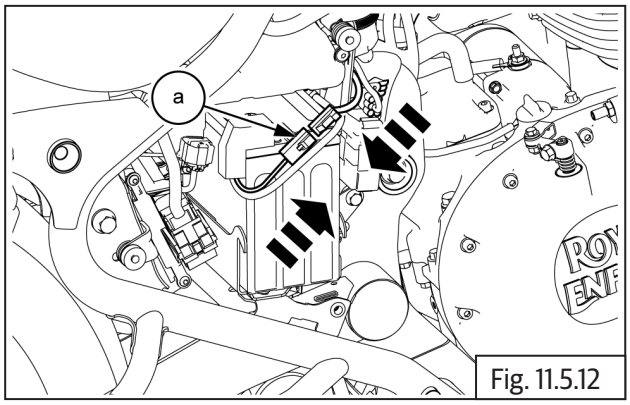

Fig. 11.5.12

- Pull battery strap (belt) **(a)** downwards and lock battery strap bracket.

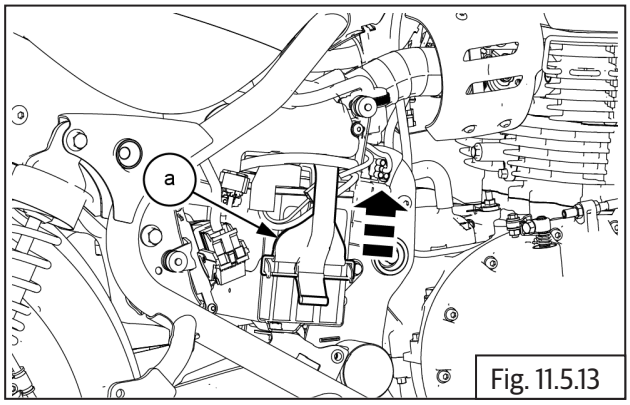

Fig. 11.5.13

5.4.29. Rider Seat

- Ensure mounting holes of the rider seat **(a)** are aligned with frame.

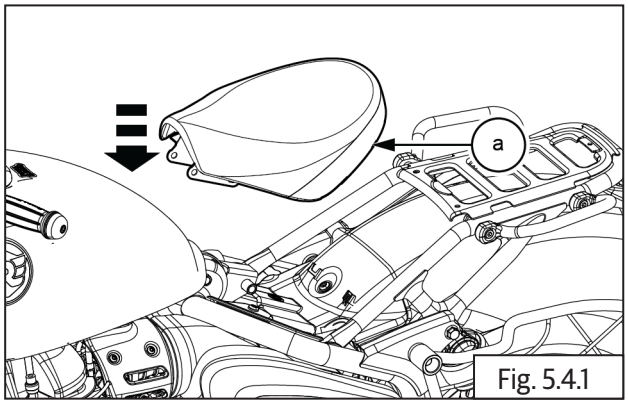

Fig. 5.4.1

- Place the Hex flange bolts **(a)** with nuts **(b)** 2 nos and tighten it.

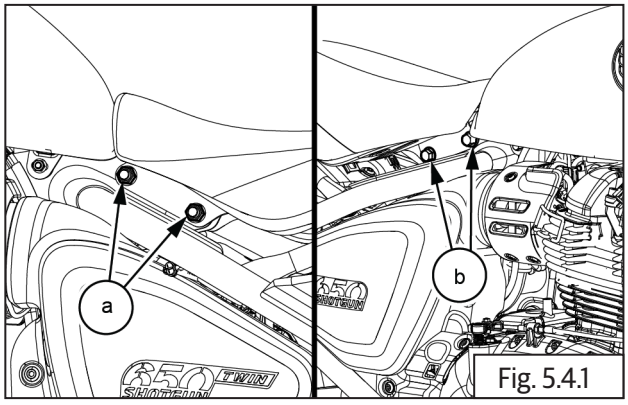

Fig. 5.4.1

	14 mm Socket with Ratchet
Torque	45 Nm / 4.5 Kg-ft

5.4.30. Pillion Seat

- Locate the pillion seat **(a)** by hooking it sideways over the frame.

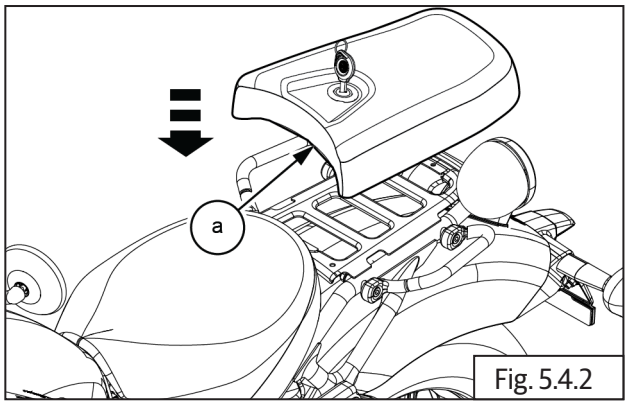

Fig. 5.4.2

- Insert ignition key **(a)** and turn it Anti clockwise lock the pillion seat.

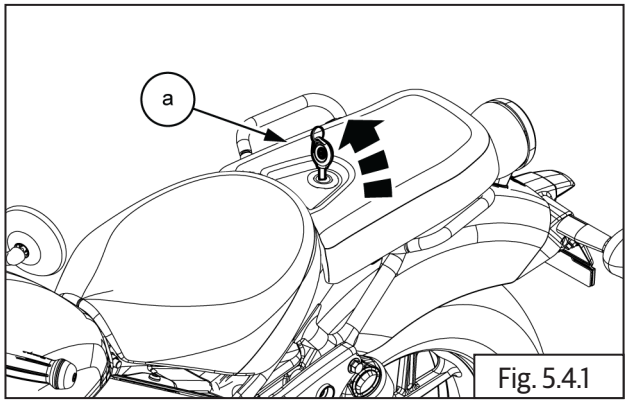

Fig. 5.4.1

5.4.31. Side Panel LH

- Turn LHS side panel **(a)** and position in fully closed position.

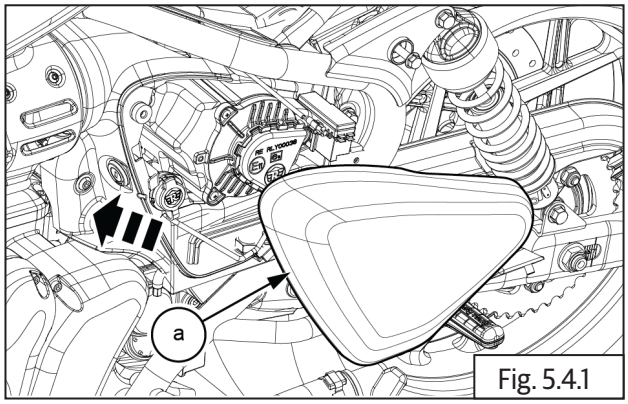

Fig. 5.4.1

• Turn the key **(a)** clockwise to lock.

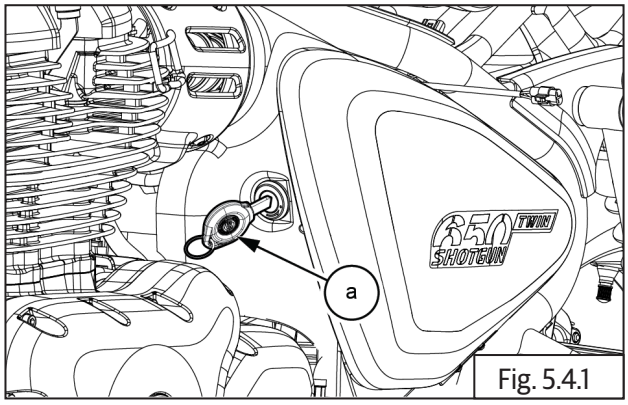

Fig. 5.4.1

5.4.32. Side Panel RH

- Locate the RHS side panel **(a)** into the frame.

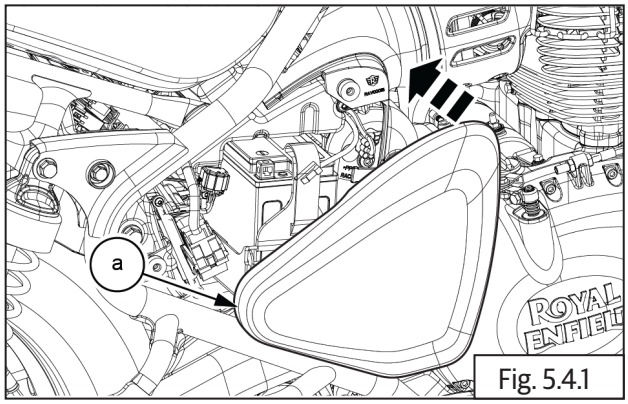

Fig. 5.4.1

- Locate the reservoir panel **(a)** on RHS side panel.

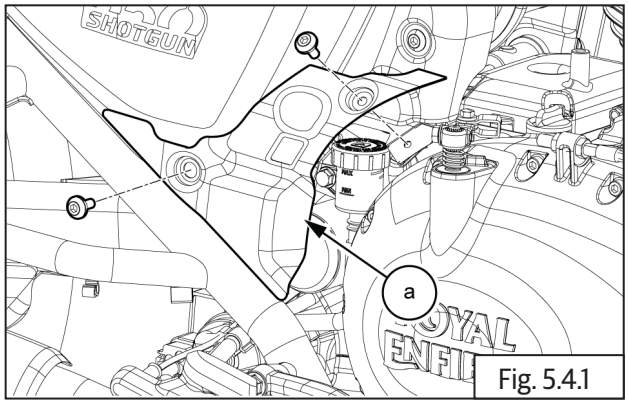

Fig. 5.4.1

- Locate and tighten the flat head screws 2 nos **(M6) (a)** on the RHS reservoir panel.

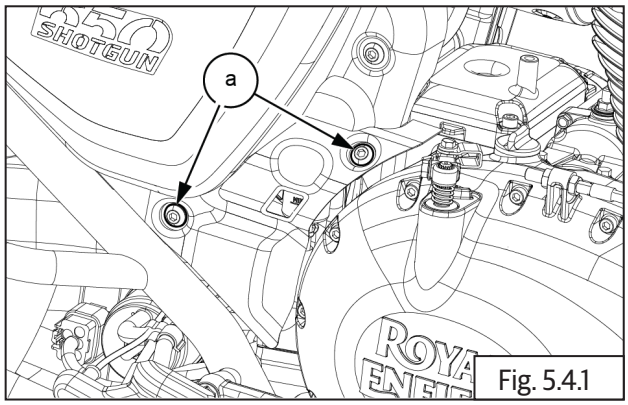

Fig. 5.4.1

	5 mm Allen Socket with Ratchet
Torque	3 - 5 N-m / 0.3 - 0.5 kgf-m

5.4.33. Oil Filter

- Locate and tighten oil filter **(a)** using special tool **(b)**.

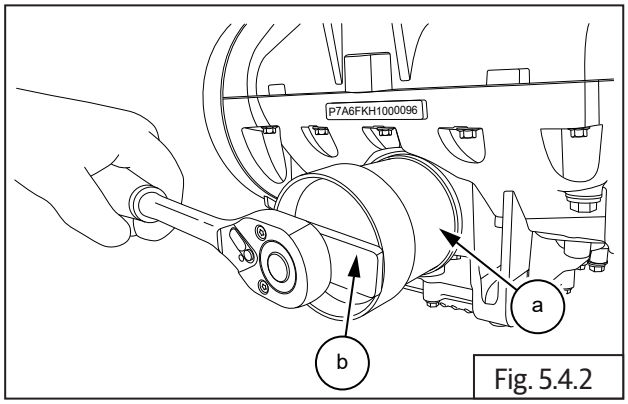

Fig. 5.4.2

SPL 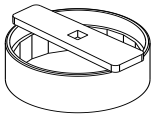	Part No: ST30294/a
	Part Name: Oil filter wrench with Ratchet
Torque	20 N-m/2 kgf-m

5.4.34. Oil Cooler Mountings to Frame

- Slide up cooler to top mounting bush and support cooler on frame **(a)**.
- Tighten 2 Nos. Hex flange head bolts **(M6) (b)** along with washers and nuts from cooler mounting to frame.

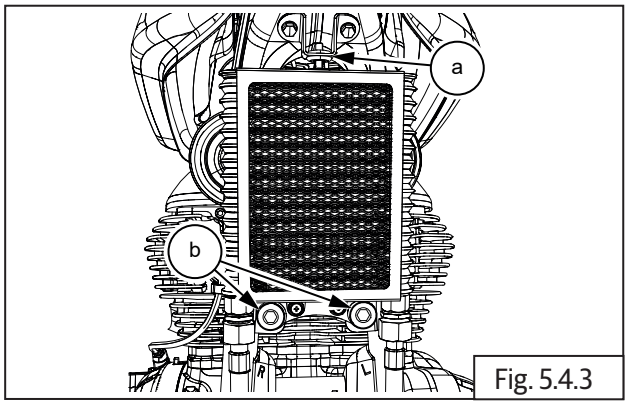

Fig. 5.4.3

	10 mm Socket with Ratchet

5.4.35. Oil Cooler Inlet and Outlet Pipes

Oil Cooler Inlet and Outlet Pipes to Engine

- Insert bolt union crankcase **(M16) (a)** along with washers and tighten to specified torque.

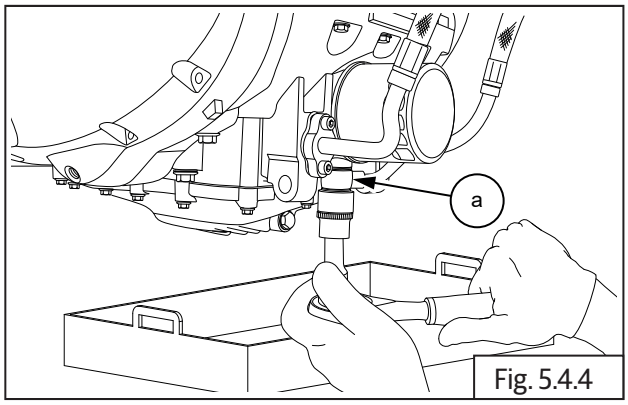

Fig. 5.4.4

	24 mm Socket with Ratchet
Torque	45 N-m/4.5 kgf-m

- Tighten bolt **(M18) (a)** on oil cooler hose **(b)** by supporting **(M16) (c)** bolt on top.

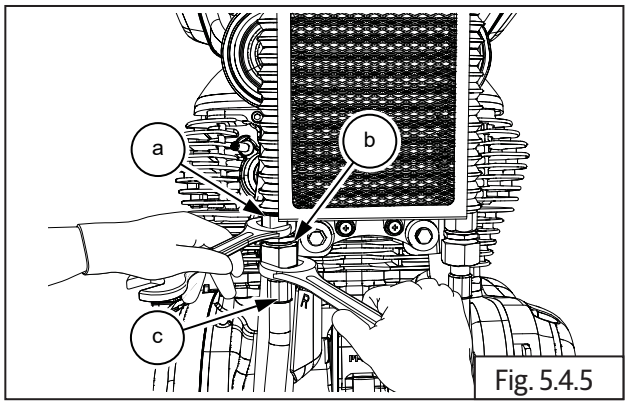

Fig. 5.4.5

	24 mm and 27 mm Double end spanner
Torque	40 N-m/4.0 kgf-m

Tighten oil cooler inlet pipe with 2 Nos. Hex socket screws **(M6) (a)**.

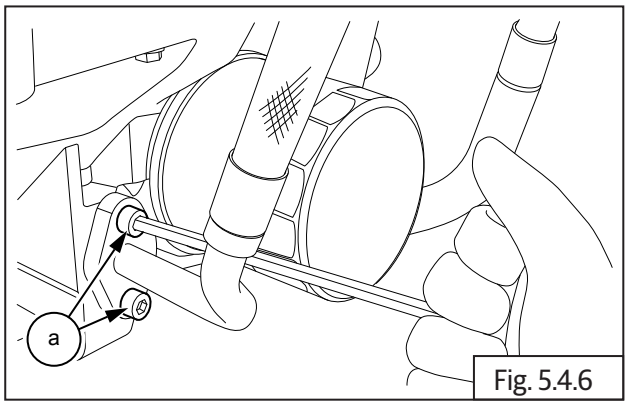

Fig. 5.4.6

	5 mm Allen socket with Ratchet and Torque wrench
Torque	12 N-m/1.2 kgf-m

5.4.36. Drain Bolt and Engine Oil Re-fill

- Place a container **(a)** under engine oil drain bolt **(M14) (b)**.
- Insert and tighten drain bolt **(b)** along with washer **(c)**.

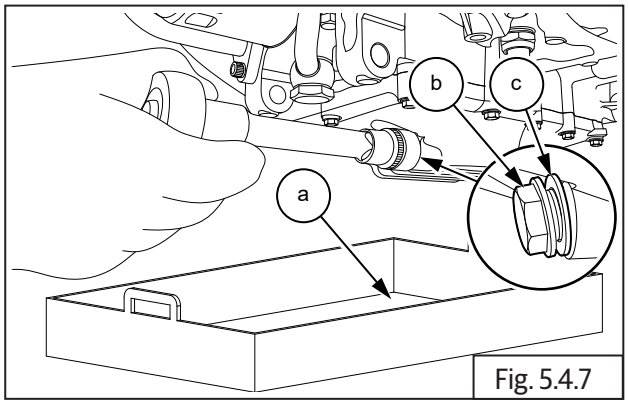

Fig. 5.4.7

Dry Fill	3.9 Liters / 1.03 Imperial gallon
Grade	TOTAL ELF MOTO 4 TECH SAE 10W50 APISL, JASO MA2, SYNTHETIC

	13 mm Socket with Ratchet
Torque	33-37 N-m / 3.3-3.7 kgf-m

- Refill engine oil with recommended quantity.
- Assemble engine oil filler cap **(a)**.

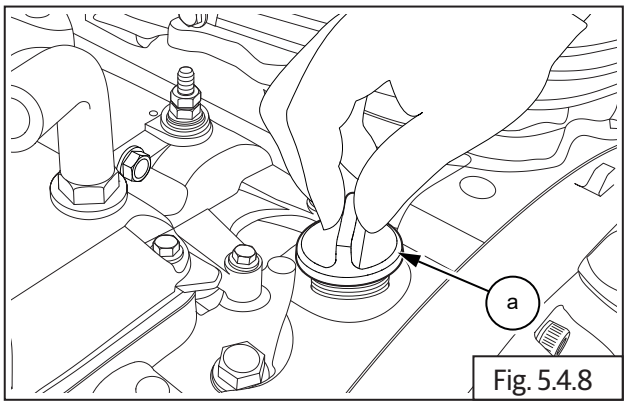

Fig. 5.4.8

- Start and warm up engine for 2 to 3 minutes and then turn it off.
- Check oil level through oil level window.

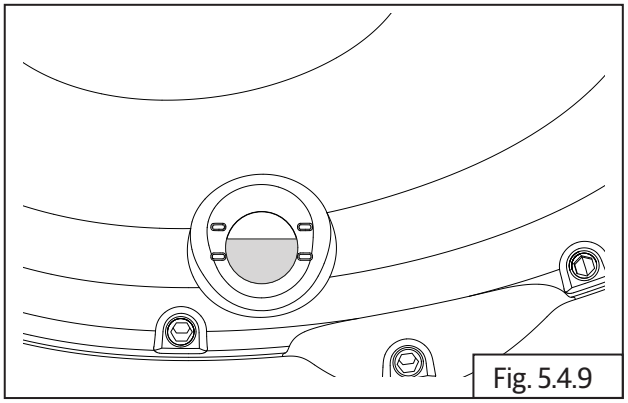
Fig. 5.4.9

5.4.37. Oil Pressure Checking Procedure

- Stand the vehicle on a level surface
- Remove the NPT plug **(a)**- Crankcase Lower LH side

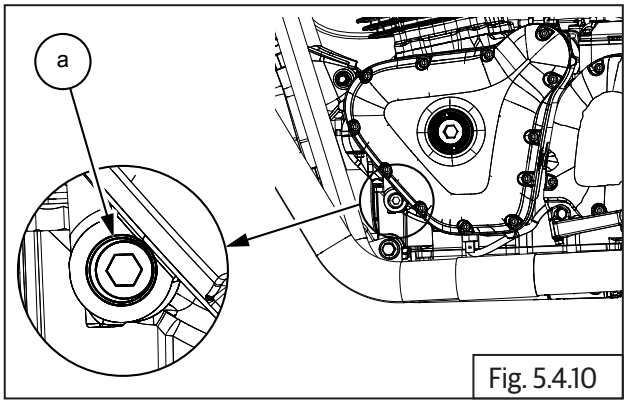

Fig. 5.4.10

- Install the oil pressure adapter **(a)** & pressure gauge **(b).**

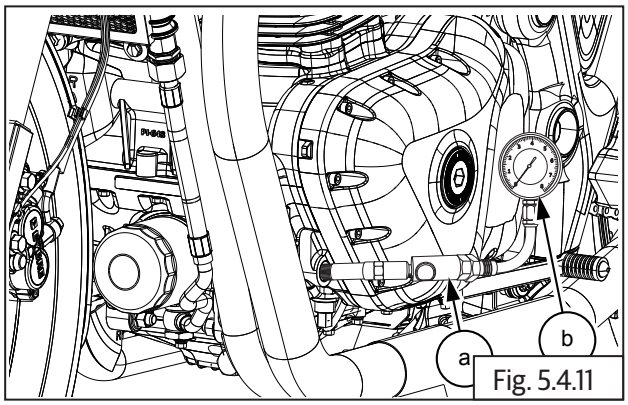

Fig. 5.4.11

- Oil temperature to be checked from EOT sensor
- Oil Pressure Value to be **4.5 (+ or -) 0.5 Bar @4000RPM** and **80°C** at **EOT sensor**
- Stop the engine and remove the oil pressure gauge and adapter

NOTE
• Apply Loctite 5910 to the NPT plug before installation.

ENGINE DISMANTLING

CONTENTS PAGE

5.5 Engine Dismantling 197

5.5.1. Drain Plug 197

5.5.2. Oil Filter 197

5.5.3. Inlet Manifold Rubber Flange 197

5.5.4. Starter Motor 197

5.5.5. Breather Hose 199

5.5.6. Breather Box Cover 199

5.5.7. Spark Plugs 199

5.5.8. Clutch Actuating Lever Assembly 200

5.5.9. Clutch Cover 200

5.5.10. Clutch Actuating Shaft 201

5.5.11. Oil Level Window 202

5.5.12. Clutch Plates 202

5.5.13. Oil Pump 204

5.5.14. Gear Shifter Shaft 205

5.5.15. Star Index Stopper 207

5.5.16. Star Index 207

5.5.17. Cylinder Head Cover 207

5.5.18. Crankshaft Plug on Magneto Cover 208

5.5.19. Rocker Carrier LH Cylinder 209

5.5.20. Rocker Carrier RH Cylinder 209

5.5.21. Rocker Arms from Rocker Carriers LH & RH 210

5.5.22. Timing Chain Tensioner 210

5.5.23. Cam Shaft, Sprocket & Chain 211

5.5.24. Magneto Cover 212

CONTENTS PAGE

5.5.25. Stator Assembly with CPS....213
5.5.26. Magneto Rotor Bolt....214
5.5.27. Starter Clutch from Magneto Rotor....215
5.5.28. Gear Position Sensor....215
5.5.29. FD Sprocket....216
5.5.30. Cylinder Head....217
5.5.31. Components from Cylinder Head....218
5.5.32. Floating Chain Pad....218
5.5.33. Cylinder Barrel....219
5.5.34. Pistons....219
5.5.35. Oil Pressure Switch....219
5.5.36. Oil Pan....220
5.5.37. Oil Strainer....221
5.5.38. Oil Bypass....225
5.5.39. Crankcase Fasteners....225
5.5.40. Splitting Crankcase....225
5.5.41. Balancer Shaft....225
5.5.42. Timing Chain Tensioner Pad....225
5.5.43. Connecting Rod....225
5.5.44. Crankshaft Assembly....226
5.5.45. Counter shaft....226
5.5.46. Driveshaft....228
5.5.47. Selector Fork and Spindles....232
5.5.48. Gear Shift Cam Drum....232

5.5 Engine Dismantling

NOTE
• *Ensure the engine is properly clamped on the holding fixture on a worktable.* • *Ensure the engine is clean and free of any oil residue/dirt. Clean engine with recommended degreasing agents/solvents to remove oil residue/dirt.* • *Ensure worktable is clean and atmosphere is dust free.*

5.5.1. Drain Plug

- Loosen and remove oil filler cap **(a)** from the crankcase top on the RH side.
- Use an adjustable plier with soft jaws to unscrew filler cap if necessary.

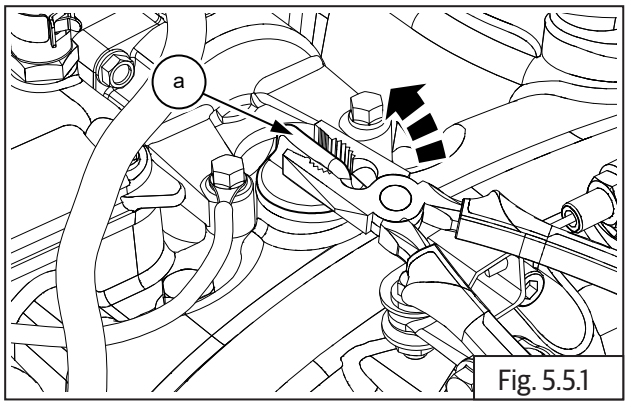

Fig. 5.5.1

	Adjustable plier with soft jaws

- Place a tray **(a)** under the engine, loosen and remove magnetic drain plug **(b)** along with washer **(c)** from the front end of the oil sump.
- Allow the engine oil to drain out completely from the engine.

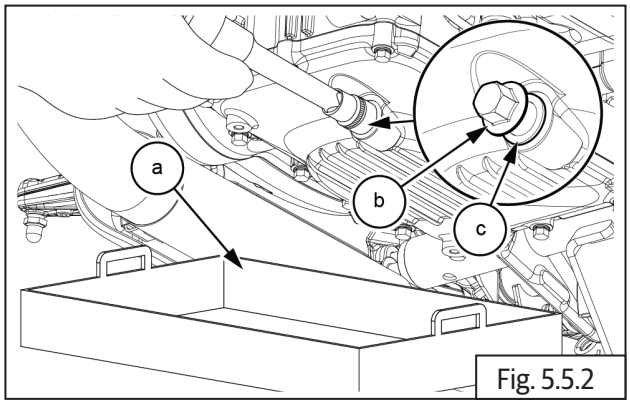

Fig. 5.5.2

	13 mm Socket with Ratchet

⚠ WARNING
Do not spill oil . Collect used oil in a seperate container and dispose it through authorized disposal agencies in your locality. Avoid skin OR body contact with the oil. Promptly wash affected area with soap and water.

NOTE
• *Ensure the engine oil is drained completely.* • *After draining the oil suitably cover the oil filler cap hole to prevent debris AND/OR small components falling into the crankcase.*

5.5.2. Oil Filter

- Place a tray under the engine oil filter.
- Loosen and remove oil filter **(a)** located on front bottom of engine **(b)** using special tool.

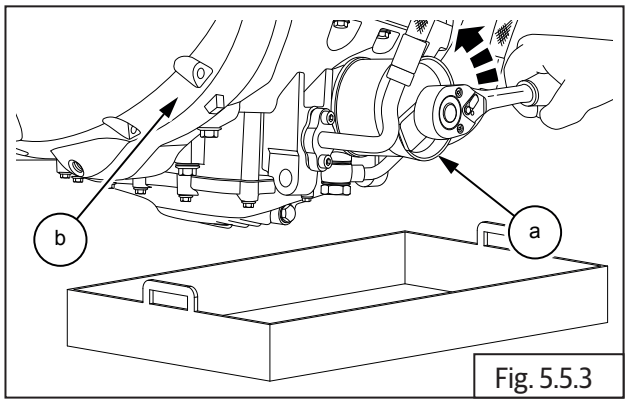

Fig. 5.5.3

SPL 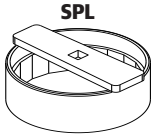	Part No: ST30294/a
	Part Name: Oil filter wrench with Ratchet

5.5.3. Inlet Manifold Rubber Flange

- Loosen and remove 4 Nos. Hex socket head bolts **(M5) (a)** located on inlet manifold of engine.

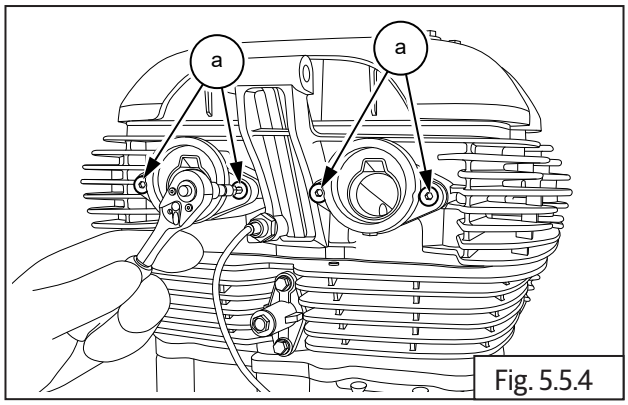

Fig. 5.5.4

	4 mm Allen socket with Ratchet

- Remove 2 Nos. inlet manifold rubber flange **(a)** from engine.

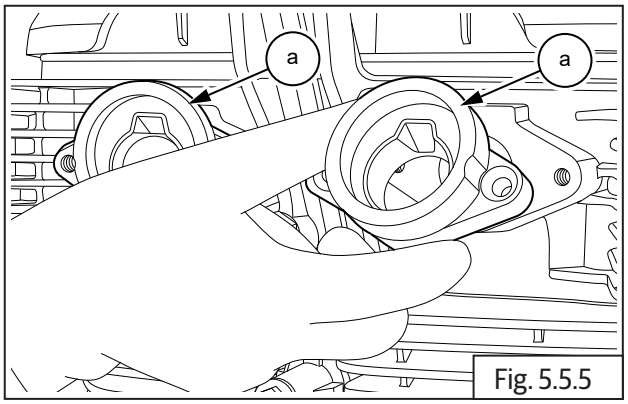

Fig. 5.5.5

5.5.4. Starter Motor

- Loosen and remove 2 Nos. Hex flange head mounting bolts **(M5) (a)** holding starter motor **(b)** to crankcase **(c)**.

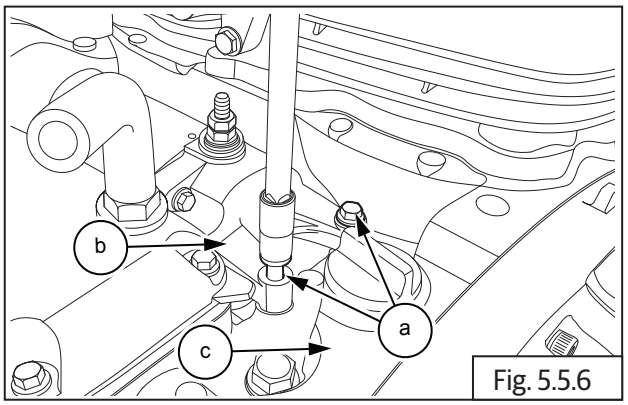

Fig. 5.5.6

	8 mm Socket with Ratchet

- Gently pull out and lift starter motor **(a)** from engine.

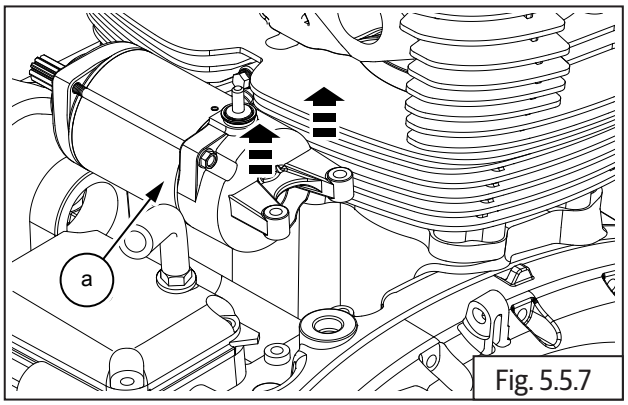

Fig. 5.5.7

NOTE
• **Do not** *tap on the starter motor while removing it. Tapping may damage the internal components.*

5.5.5. Breather Hose

- Release the clamp **(a)** to disconnect breather hose **(b)** from breather box **(c)**.

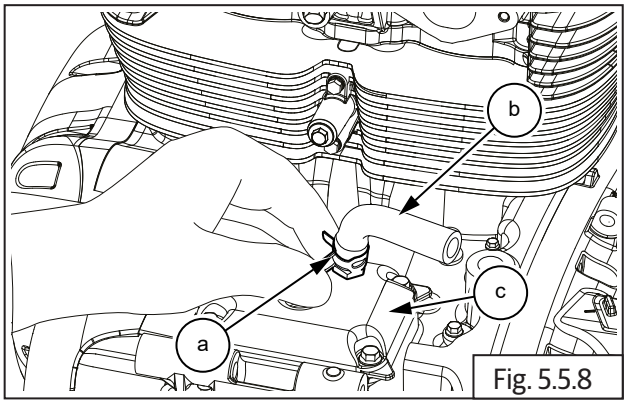

Fig. 5.5.8

	Nose plier

5.5.6. Breather Box Cover

- Loosen and remove the 5 Nos. Hex head flange bolts **(M6) (a)**.

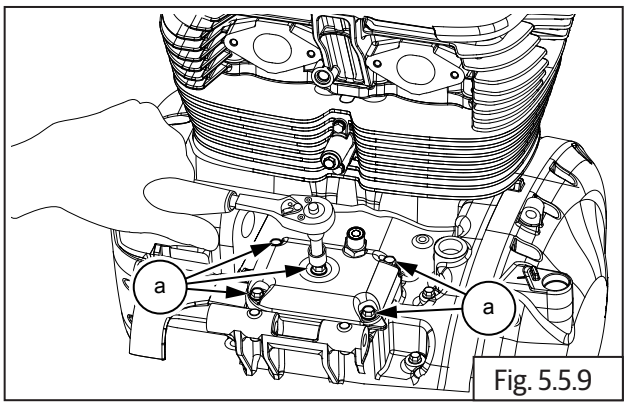

Fig. 5.5.9

	10 mm Socket with Ratchet

- Gently remove the breather box cover **(a)** along with gasket **(b)**.

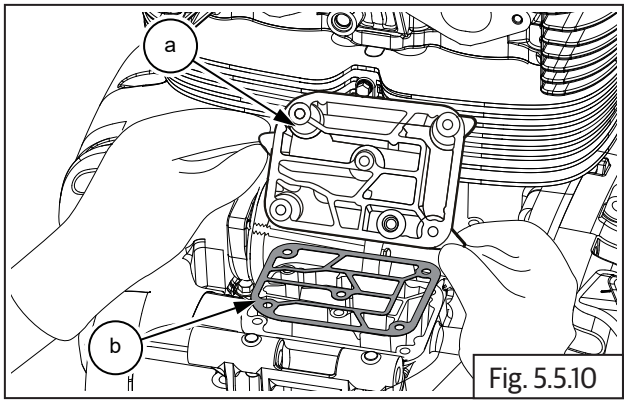

Fig. 5.5.10

5.5.7. Spark Plugs

⚠ CAUTION

Before removing the spark plugs, blow away any dirt accumulated in the spark plug area with compressed air to prevent it from falling into cylinder head.

- Loosen and remove RH spark plug **(a)** from RH cylinder head.

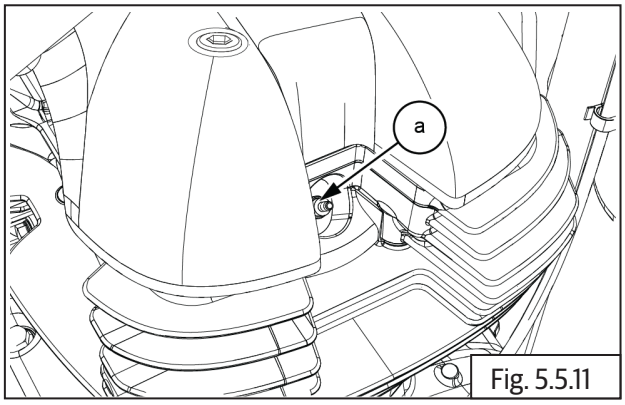

Fig. 5.5.11

	16 mm Socket with Ratchet

- Repeat the procedure to remove LH spark plug.

5.5.8. Clutch Actuating Lever Assembly

- Loosen and remove Hex head bolt **(M6) (a)** from clutch actuating lever assembly **(b)**.

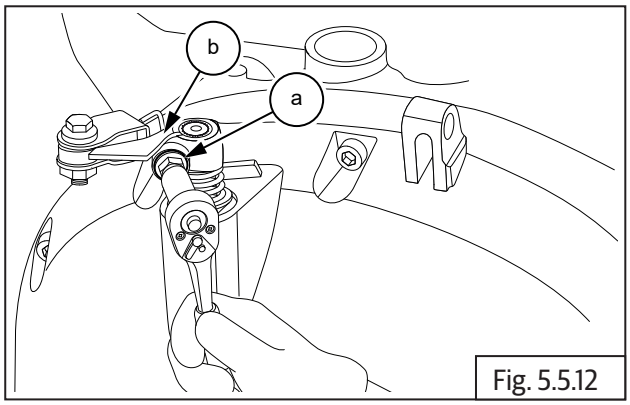

Fig. 5.5.12

	10 mm Socket with Ratchet

- Rotate clutch actuating lever **(a)** in clockwise direction to release tension in spring **(b)**.

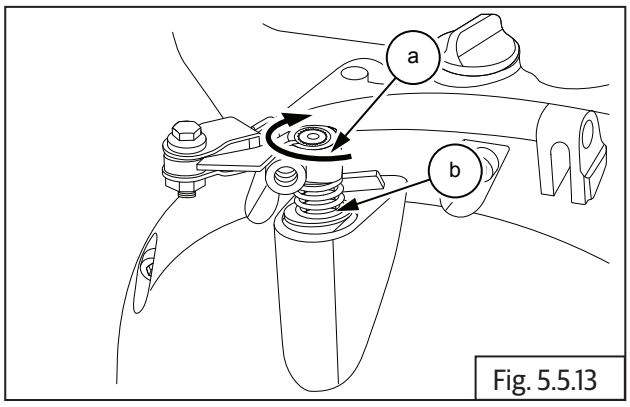

Fig. 5.5.13

- Remove clutch actuating lever **(a)** from clutch shaft **(b)** on cover.

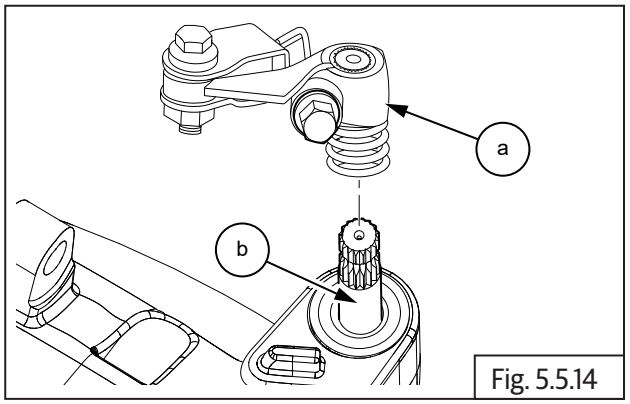

Fig. 5.5.14

	Wedge

NOTE
• *Use a suitable wedge to slightly expand the slot in the clutch actuating arm and gently lift from the shaft.*

5.5.9. Clutch Cover

- Loosen and remove 14 Nos. Hex socket head screws **(M6) (a)** in a crisscross to remove clutch cover **(b)** from motorcycle RH.

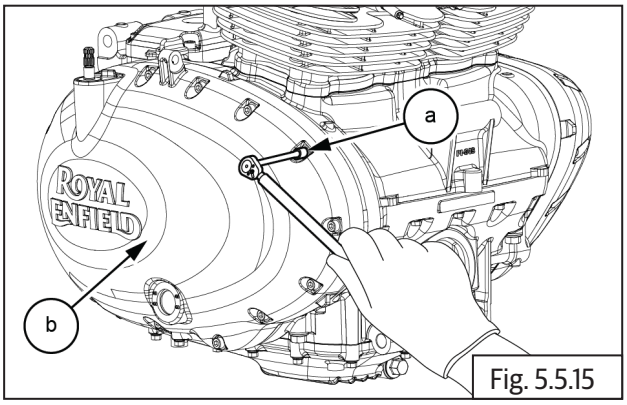

Fig. 5.5.15

	5 mm Allen socket with Ratchet

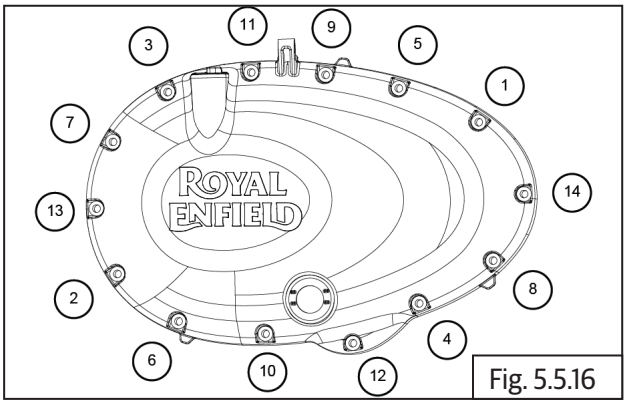

Fig. 5.5.16

- If the cover is jammed in the engine, gently tap on the tabs **(a)** provided on the cover using a plastic/ rubber mallet.

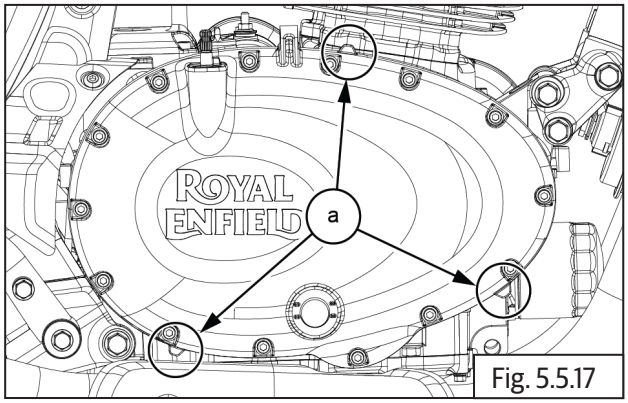

Fig. 5.5.17

	Plastic/Rubber mallet

- Remove gasket **(a)** and 2 Nos. dowel pins **(b)** from clutch cover/engine.

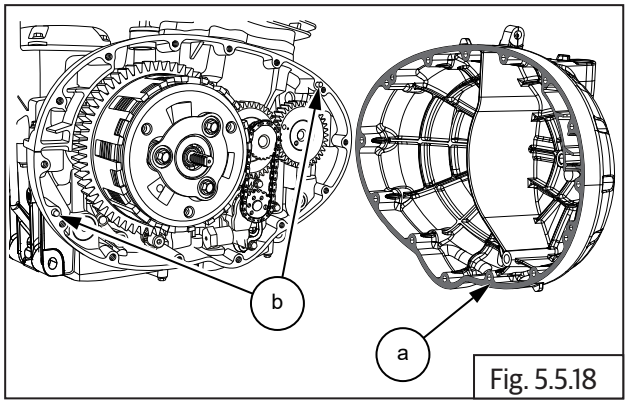

Fig. 5.5.18

⚠ CAUTION

Do not use a sharp tool to scrap the gasket material from the joint faces.

If required scrap only with a soft and blunt tool.

5.5.10. Clutch Actuating Shaft

- Gently remove the E clip **(a)** and washer **(b)** from the bottom of the clutch actuating shaft inside clutch cover.

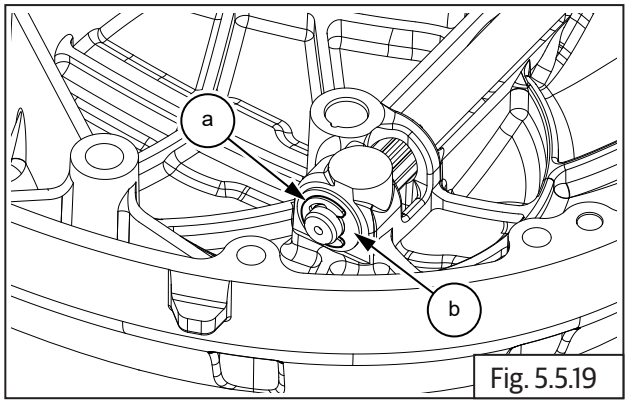

Fig. 5.5.19

	Nose plier

- Remove oil seal **(a)** along with washer **(b)** from outer clutch case.

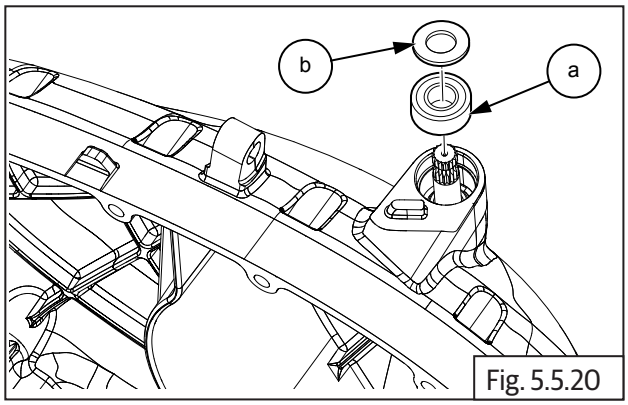

Fig. 5.5.20

- Gently pull out clutch actuating shaft **(a)** from clutch cover **(b)**.

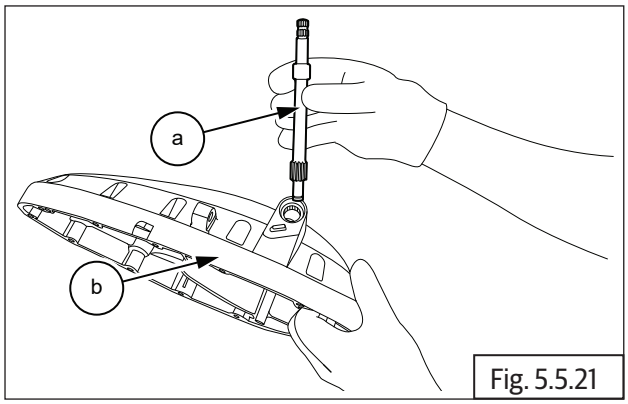

Fig. 5.5.21

- Remove needle roller **(a)** top from clutch cover with special tool.
- Remove needle roller bearing **(b)** bottom from clutch cover with special tool.

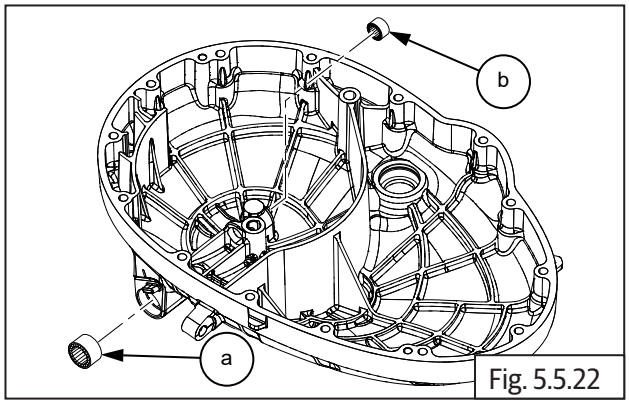

Fig. 5.5.22

SPL 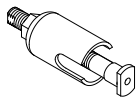	Part No: ST30265/a
	Part Name: Clutch actuating shaft top bearing puller

SPL 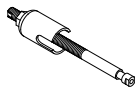	Part No: ST30263/a
	Part Name: Clutch actuating shaft bottom bearing puller

5.5.11. Oil Level Window

- Remove the circlip **(a)** on the oil level window inside clutch cover.

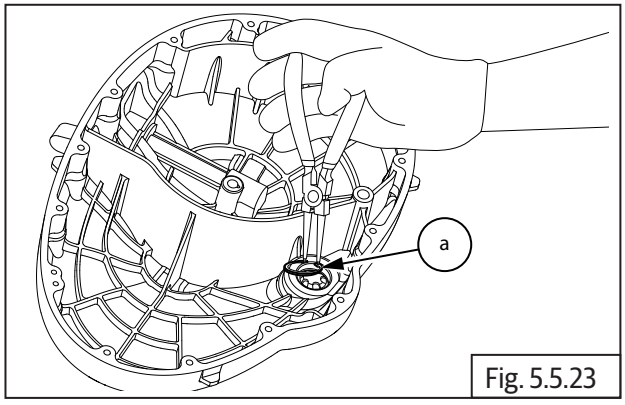

Fig. 5.5.23

	Circlip plier

- Gently press oil window **(a)** from outer side to remove from clutch cover.

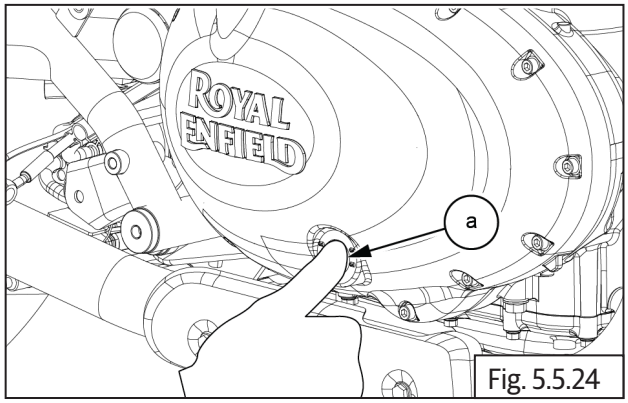

Fig. 5.5.24

5.5.12. Clutch Plates

⚠ CAUTION

Bolts are under spring tension. Loosen bolts progressively and slowly until spring tension is completely released.

- Loosen 3 Nos. Hex flange head bolts **(M6) (a)** on the pressure plate evenly and slowly until tension is released completely.

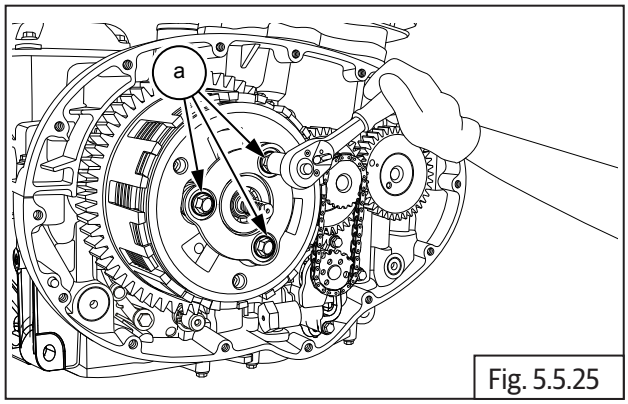

Fig. 5.5.25

	10 mm Socket with Ratchet

- Hold pressure plate **(a)** and remove the bolts **(b)**.
- Remove pressure plate and spring **(c)** from clutch hub.

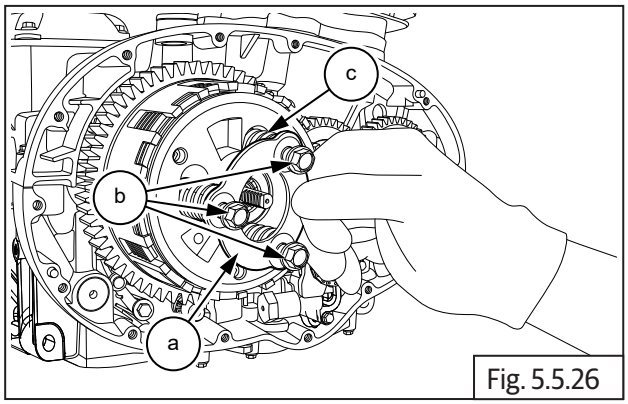

Fig. 5.5.26

- Remove clutch hub **(b)** along with 2 friction plates, 1 steel plate and pull rod **(a)** from the clutch bell.

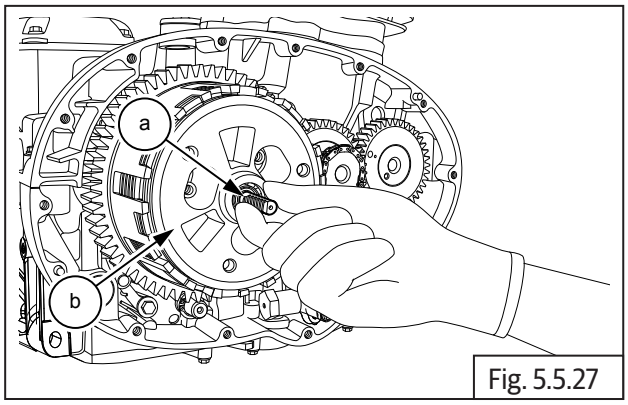

Fig. 5.5.27

- Remove the pull rod from the inner side of clutch bell.
- Remove 1st friction plate **(a)**, steel plate **(b)** and 2nd friction plate **(c)** from clutch hub **(d)**.

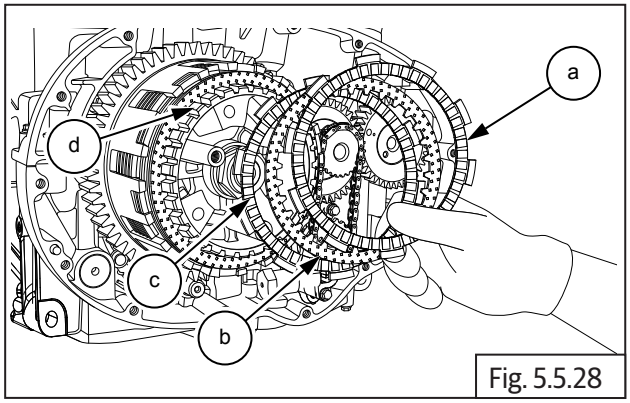

Fig. 5.5.28

- Locate special tool **(a)** on clutch center **(b)** and ensure it is seated fully on the splines.
- Hold the clutch center firmly and remove Hex "U" nut **(M17) (b)** by rotating clockwise.

⚠ CAUTION
Hex "U" nut is a left hand thread. Wrong rotation may damage the threads.

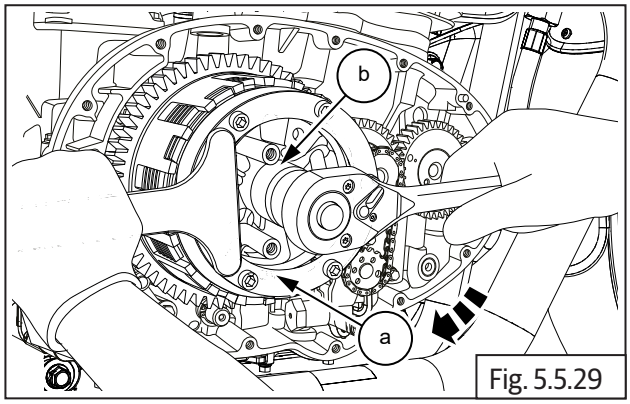

Fig. 5.5.29

SPL 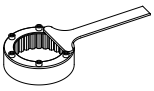	Part No: ST30266/a
	Part Name: Clutch holder

- Remove Hex U nut **(M17) (a)** from counter shaft

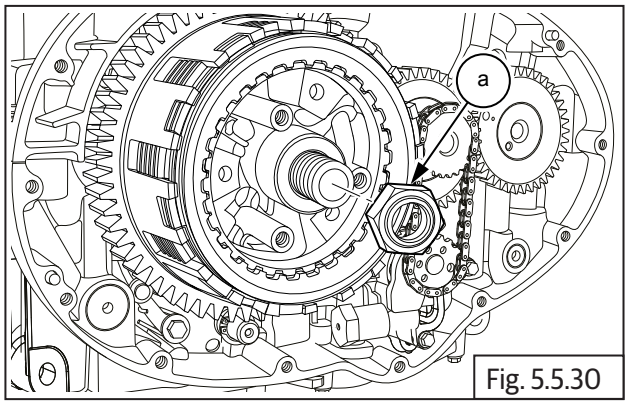

Fig. 5.5.30

	24 mm Socket with Ratchet

- Remove washer **(a)** from counter shaft.

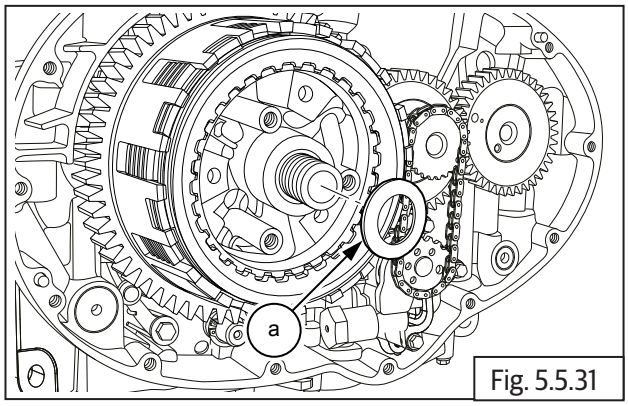

Fig. 5.5.31

- Remove special tool and pull out clutch bell assembly **(a)** from the counter shaft along with the remaining 6 plates **(b)** (3 each friction and steel plates) from the clutch housing.

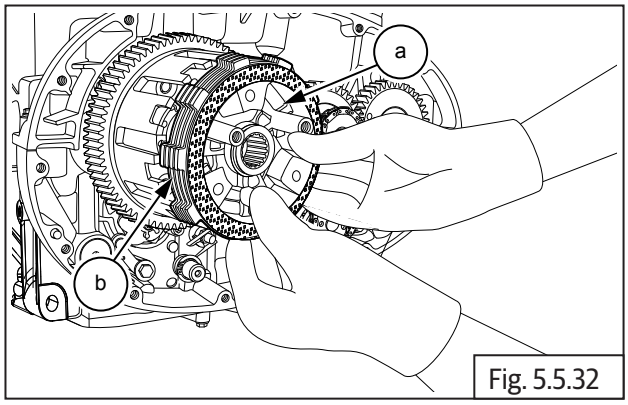

Fig. 5.5.32

NOTE
• *If the plates are to be reused, suitably mark the plates so that they can be reassembled in the same sequence as it was before dismantling.*

- Remove thrust washer **(a)** from counter shaft.

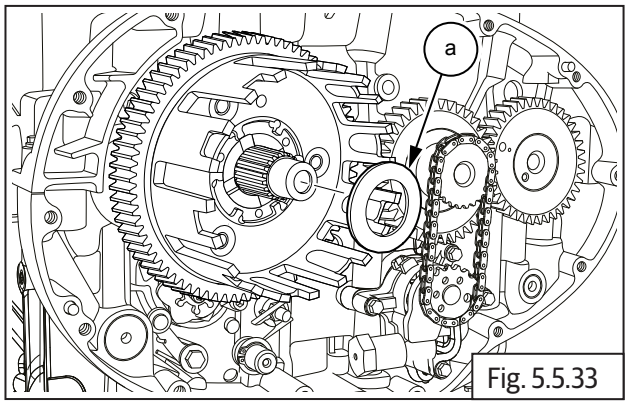

Fig. 5.5.33

- Remove clutch housing **(a)** from counter shaft .

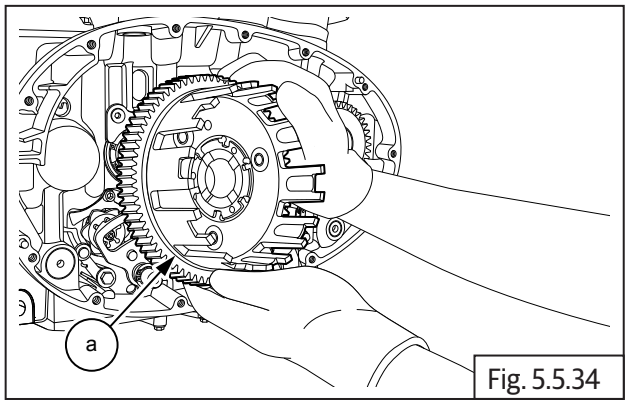

Fig. 5.5.34

- Remove the needle bearing **(a)**.

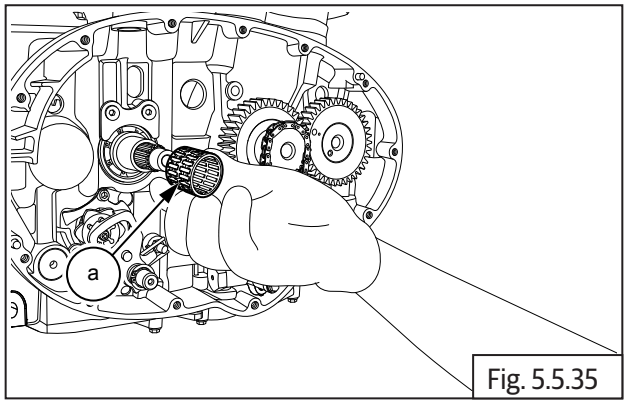

Fig. 5.5.35

- Remove collar bush **(a)** from counter shaft.

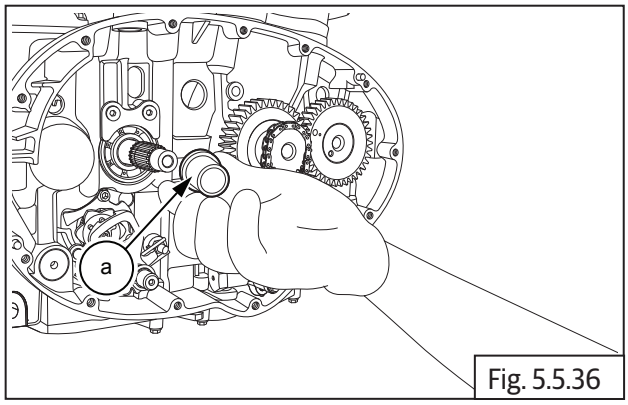

Fig. 5.5.36

5.5.13. Oil Pump

- Loosen and remove Hex flange bolt **(M6) (a)** on oil pump sprocket.

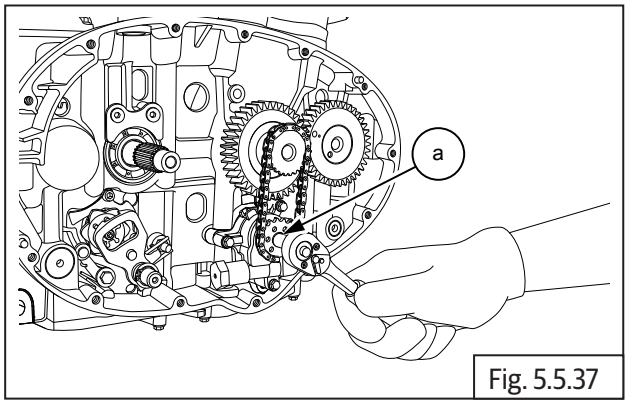

Fig. 5.5.37

	8 mm Socket with Ratchet

- Gently pull out the sprocket **(a)** from oil pump shaft.
- Release and remove chain **(b)** from the teeth on crankshaft sprocket **(c)**.

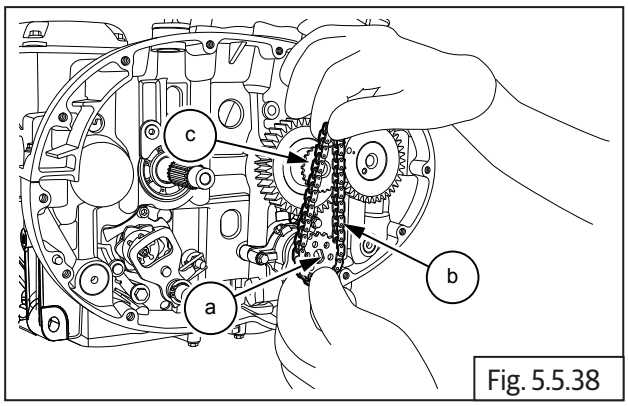

Fig. 5.5.38

- Loosen and remove 4 Nos. Hex flange head bolts **(M5) (a)**.

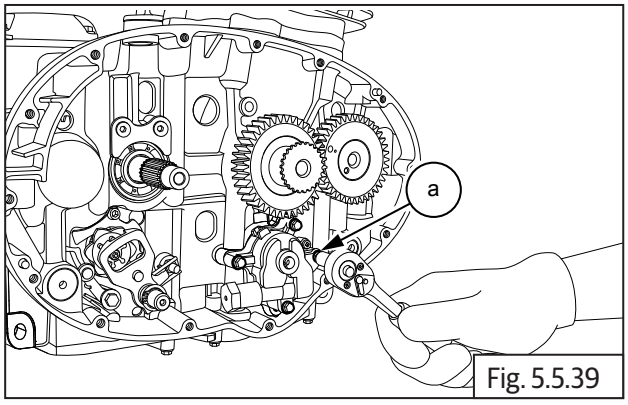

Fig. 5.5.39

	8 mm Socket with Ratchet

- Remove the oil pump **(a)**..

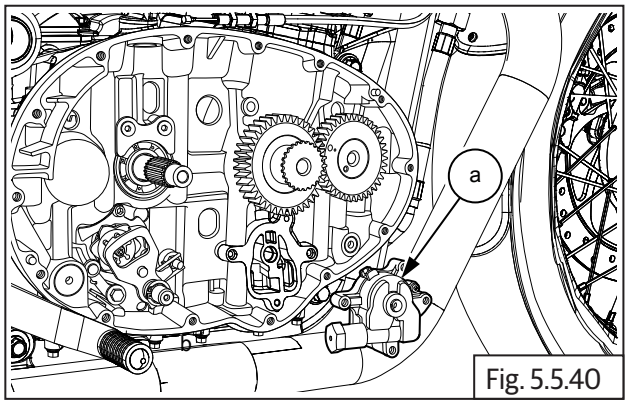

Fig. 5.5.40

NOTE
• *The oil pump does not have any serviceable parts, hence as to be replaced only as a complete assembly.*

5.5.14. Gear Shifter Shaft

- Remove the circlip **(a)** from shifter shaft **(b)** on engine LH side.

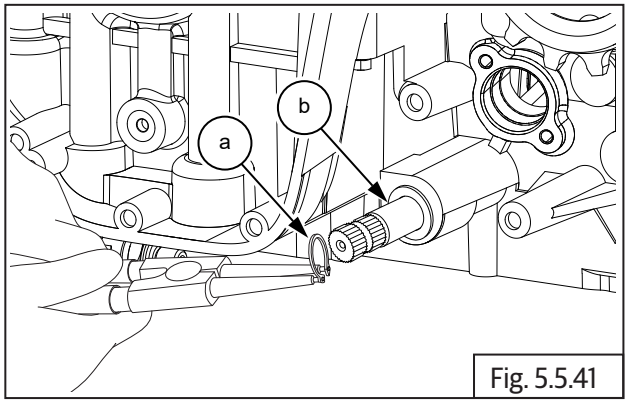

Fig. 5.5.41

	Circlip plier

- Remove the washer **(a)** from shifter shaft.

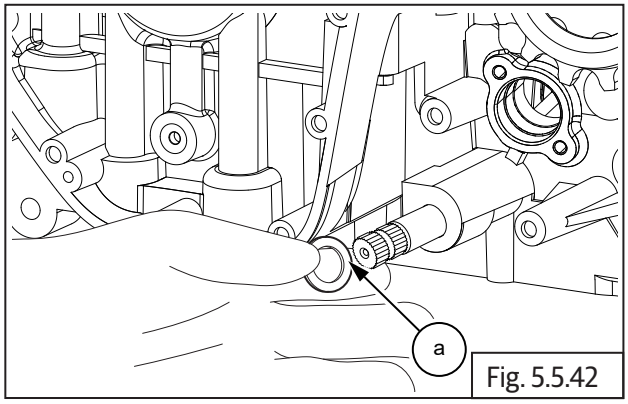

Fig. 5.5.42

- Gently pull out shifter shaft assembly **(a)** from engine RH side.

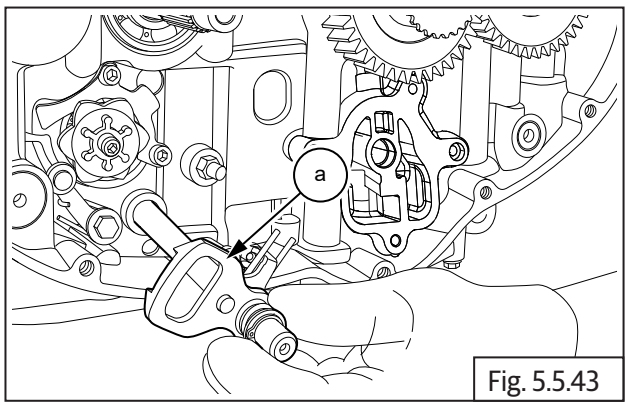

Fig. 5.5.43

- Remove circlip **(a)** from shorter end of shifter shaft **(b)**.

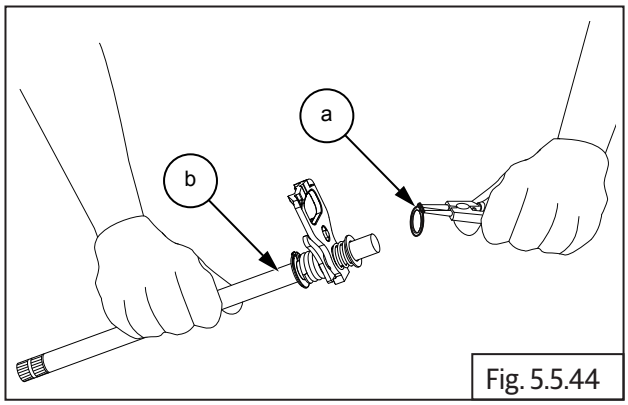

Fig. 5.5.44

	Circlip plier

- Remove washer **(a)** from shorter end of shifter shaft **(b)**.

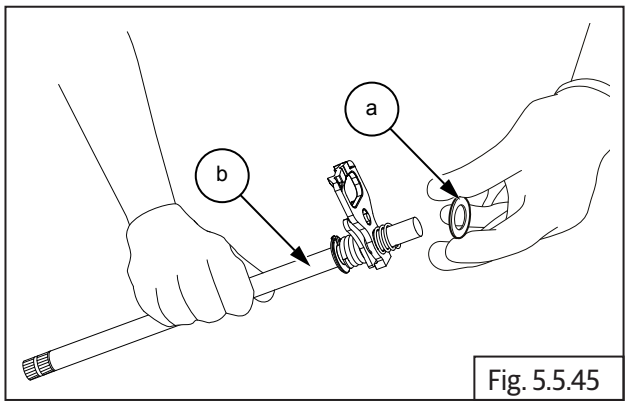

Fig. 5.5.45

- Remove spring **(a)** from shifter shaft **(b)**.

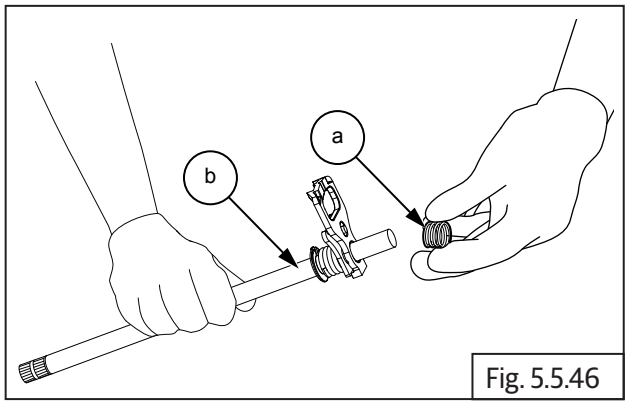

Fig. 5.5.46

- Remove plate **(a)** from shorter end of shifter shaft **(b)**.

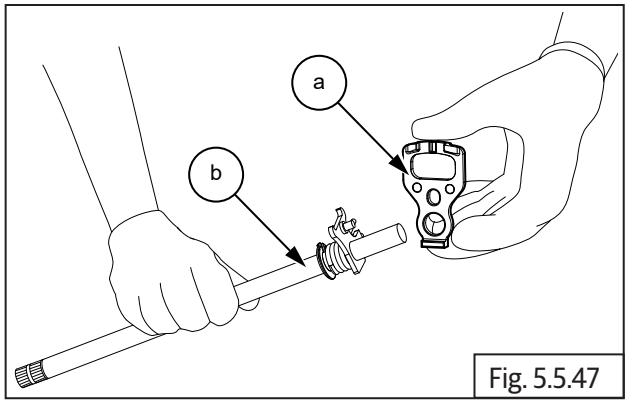

Fig. 5.5.47

- Remove circlip **(a)** from longer end of shifter shaft **(b)**.

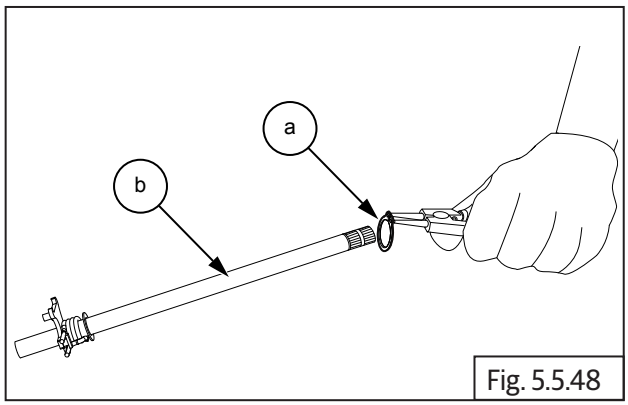

Fig. 5.5.48

	Circlip plier

- Remove washer **(a)** from longer end of shifter shaft **(b)**.

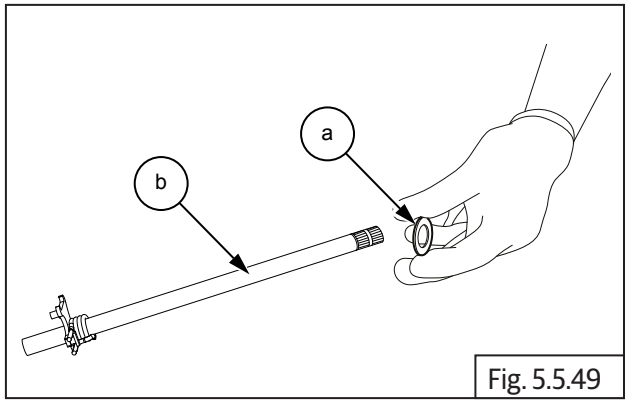

Fig. 5.5.49

- Expand spring legs and pull out spring **(a)** from longer end of shifter shaft **(b)**.

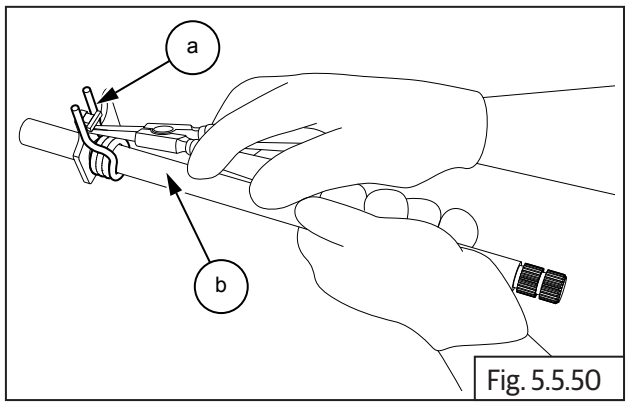

Fig. 5.5.50

	Circlip plier

5.5.15. Star Index Stopper

⚠ CAUTION

Spring loaded bolt. Support stopper while removing bolt.

- Loosen and remove Hex socket head bolt **(M6) (a)** from lower crankcase (RH) (clutch side).
- Remove stopper along with spring and washer.

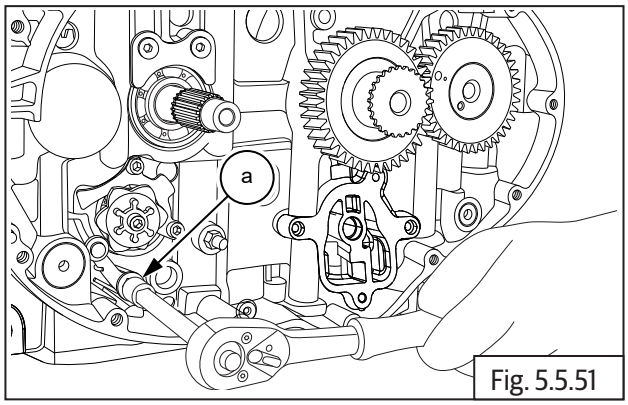

Fig. 5.5.51

	10 mm Socket with Ratchet

5.5.16. Star Index

- Loosen and remove Hex socket head stepped bolt **(M6) (a)** on gear shift cam drum.

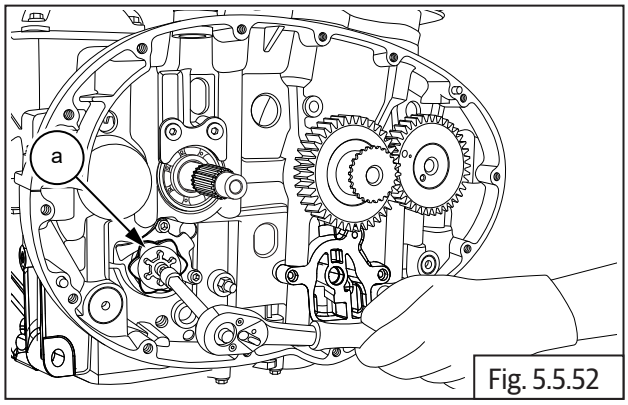

Fig. 5.5.52

	5 mm Allen socket with Ratchet

- Loosen and remove 2 Nos. Hex head bolts **(M6) (a)** from selector fork shaft stopper plate.

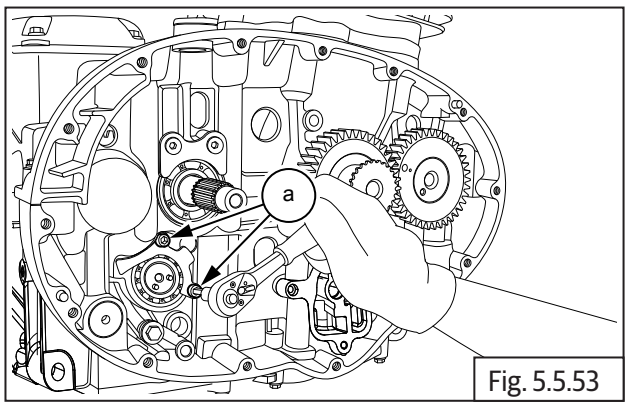

Fig. 5.5.53

	5 mm Allen socket with Ratchet

5.5.17. Cylinder Head Cover

- Loosen and remove 4 Nos. Hex flange head bolts **(M6) (a)** in crisscross pattern along with the rubber seals and washers.

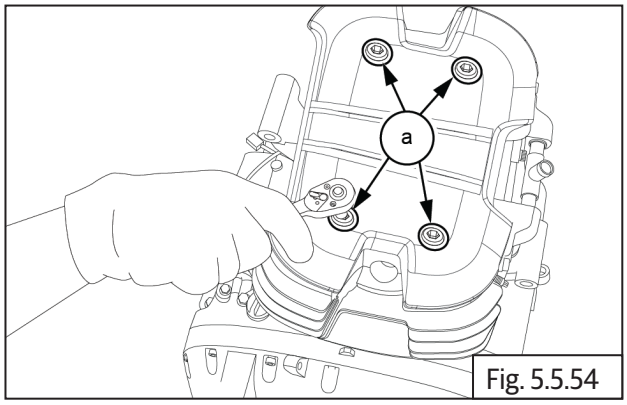

Fig. 5.5.54

	8 mm Socket with Ratchet

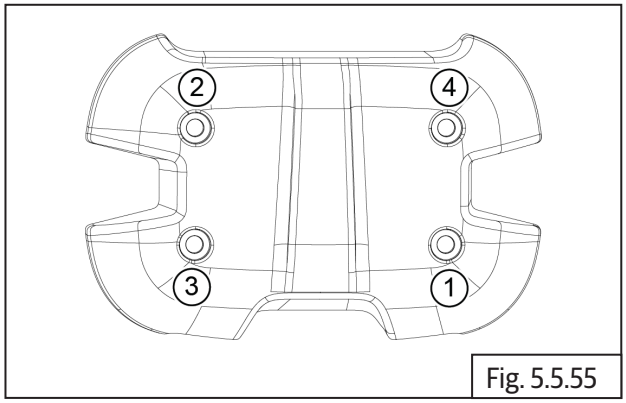

Fig. 5.5.55

- Gently remove rocker cover **(a)** from cylinder head **(b)**.

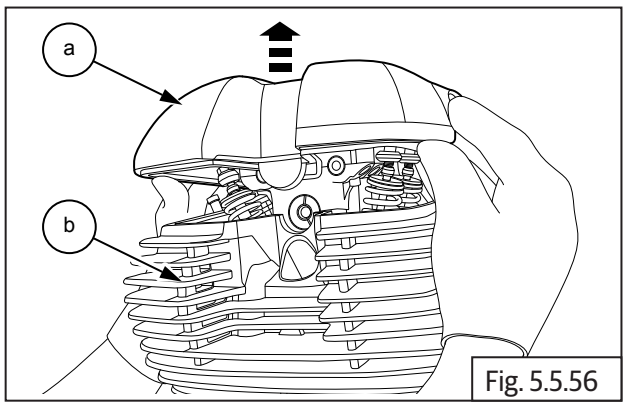

Fig. 5.5.56

- Remove rubber gasket **(a)** from cylinder head cover **(b)**.

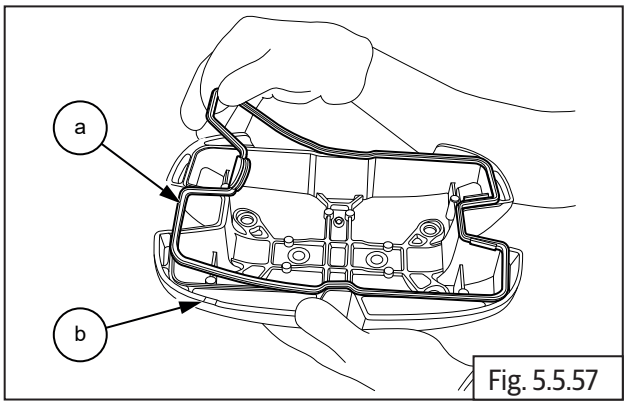

Fig. 5.5.57

5.5.18. Crankshaft Plug on Magneto Cover

- Remove crankshaft hole plug **(M34) (a)** from center of magneto cover **(b)**.

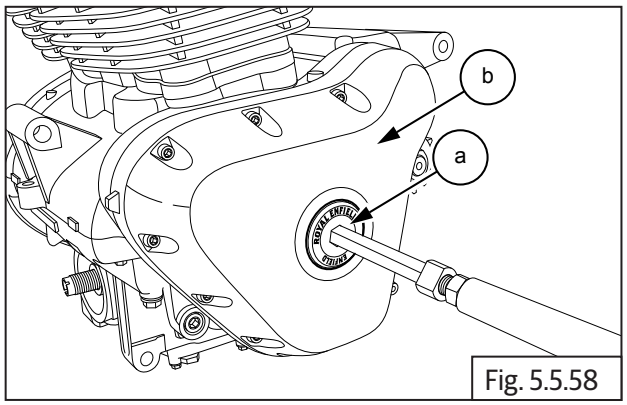

Fig. 5.5.58

	14 mm Allen key

- Remove O-ring **(a)** from crankshaft hole plug **(b)**.

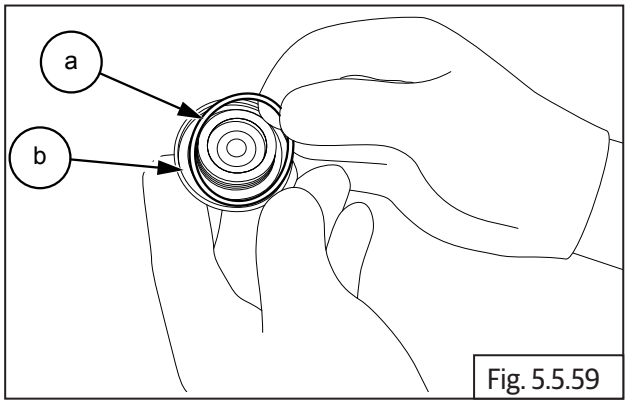

Fig. 5.5.59

5.5.19. Rocker Carrier LH Cylinder

- Locate 17mm socket with ratchet (a) on the magneto rotor bolt inside the plug hole and rotate magneto rotor slowly till reference mark "L" on camshaft LH side is aligned with machined gasket surface on cylinder head..

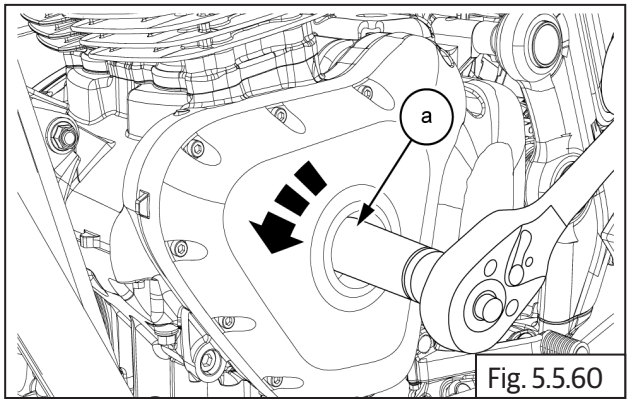

Fig. 5.5.60

	17 mm Socket with Ratchet

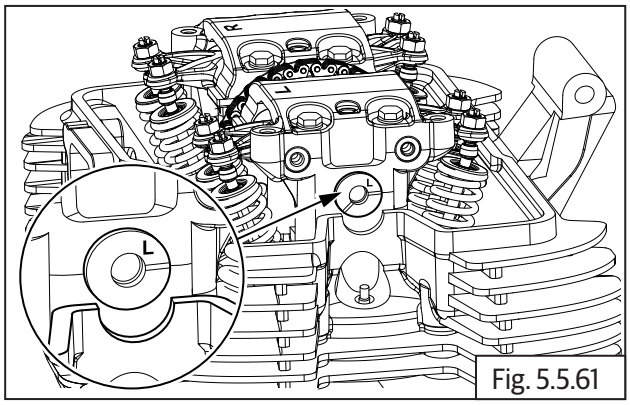

Fig. 5.5.61

- Loosen and remove 4 Nos. Hex flange head bolts **(M6) (a)** from rocker carrier.

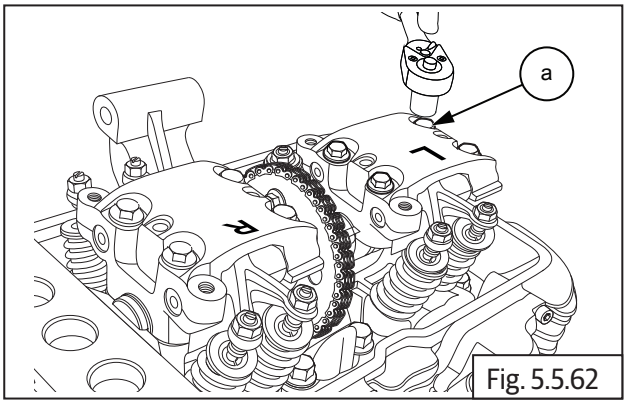

Fig. 5.5.62

	10 mm Socket with Ratchet

- Gently remove the rocker carrier **(a)** along with rocker arms from cylinder head.

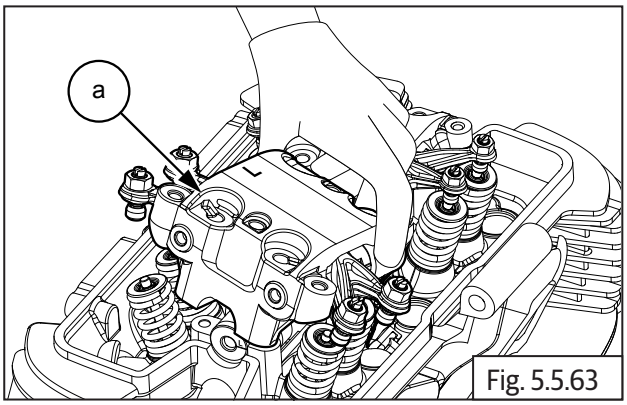

Fig. 5.5.63

5.5.20. Rocker Carrier RH Cylinder

- Locate 17mm socket with ratchet (a) on the magneto rotor bolt inside the plug hole and rotate magneto rotor slowly till reference mark "R" on camshaft LH side is aligned with machined gasket surface on cylinder head.

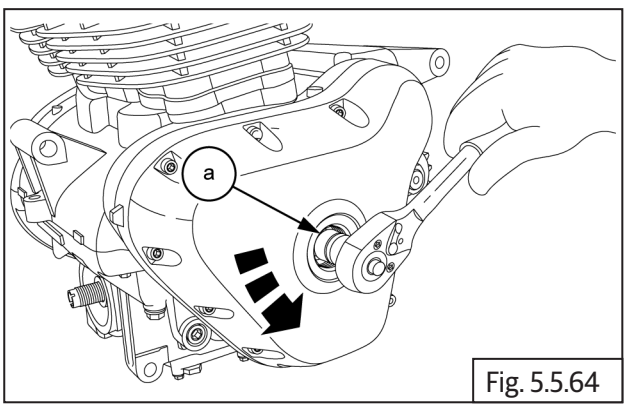

Fig. 5.5.64

	17 mm Socket with Ratchet

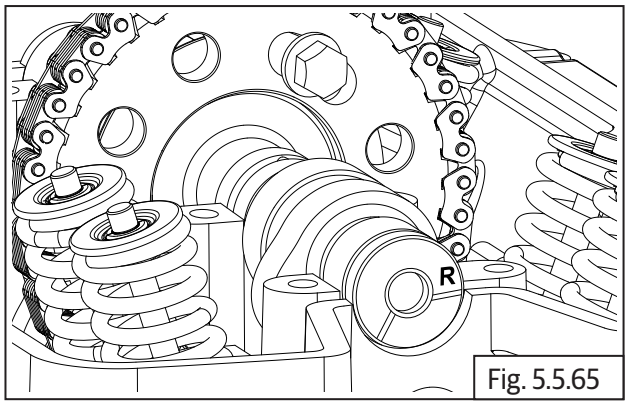

Fig. 5.5.65

- Loosen and remove 4 Nos. Hex head bolts **(M10) (a)** from rocker carrier RH.

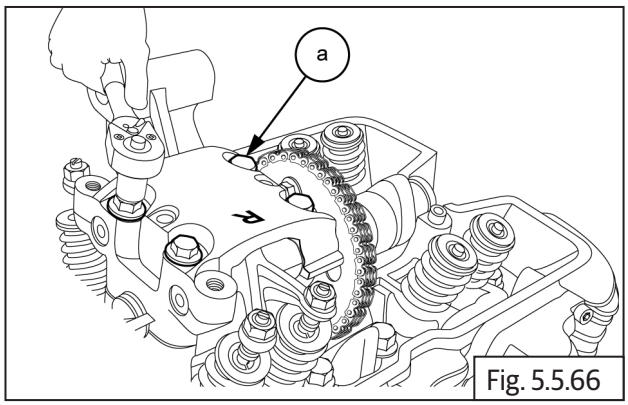

Fig. 5.5.66

	10 mm Socket with Ratchet

5.5.21. Rocker Arms from Rocker Carriers LH & RH

- Thread in a Hex flange bolt **(M6) (a)** into the threaded portion of rocker shaft **(b)**.
- Gently pull out rocker shaft from rocker carrier, duly supporting the rocker arms.
- Remove rocker arms inlet and exhaust from the rocker carrier.
- Repeat the procedures above to remove rocker arms from the other carrier.

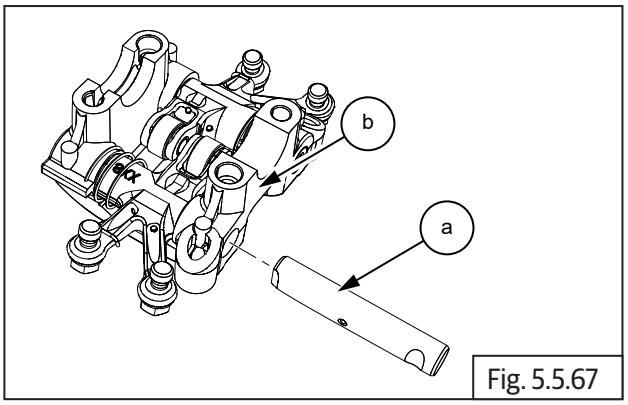

Fig. 5.5.67

- Gently depress the spring **(a)** and remove from rocker carrierrs **(b)**.

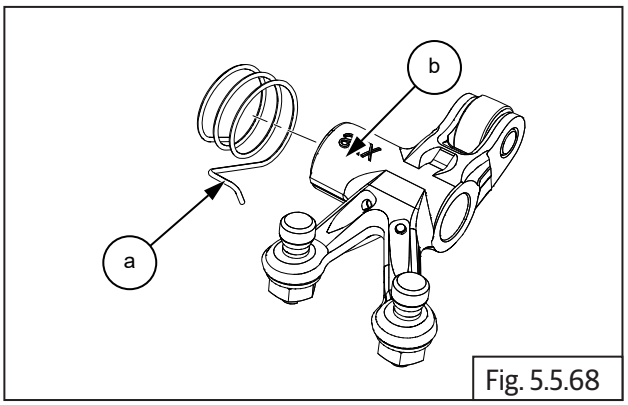

Fig. 5.5.68

5.5.22. Timing Chain Tensioner

- Loosen and remove center Hex flange bolt **(M6) (a)** from cylinder barrel.

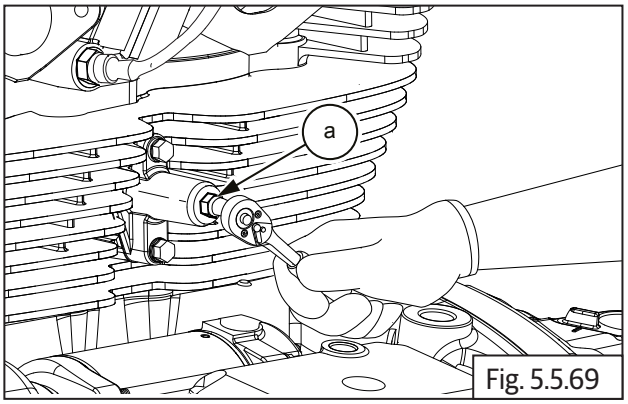

Fig. 5.5.69

	10 mm Socket with Ratchet

- Loosen and remove 2 Nos. Hex flange bolts **(M6) (a)** from cylinder barrel **(b)**.

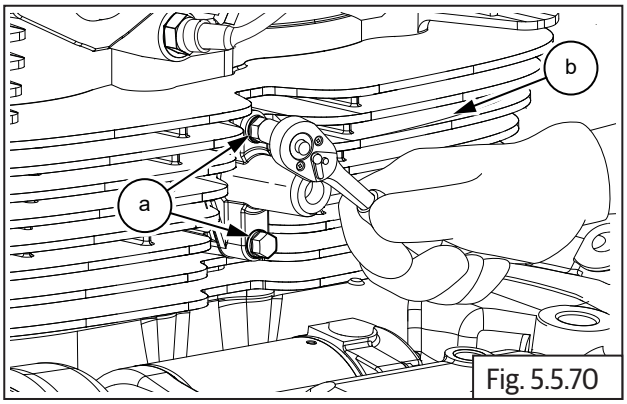

Fig. 5.5.70

	10 mm Socket with Ratchet

- Remove timing chain pad adjuster **(a)** from cylinder barrel.

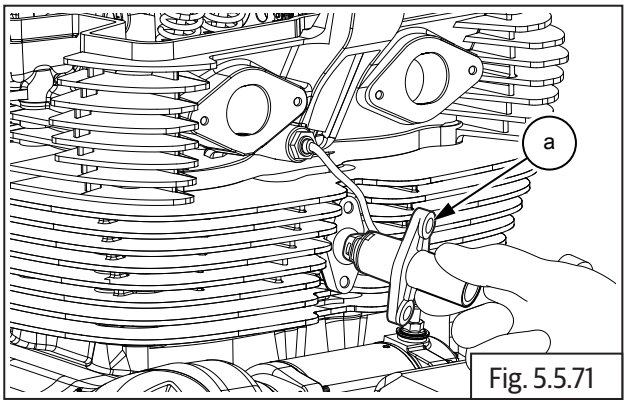

Fig. 5.5.71

5.5.23. Cam Shaft, Sprocket & Chain

- Rotate magneto rotor slowly till one of the Hex head bolts on cam chain sprocket appears at the top most position..

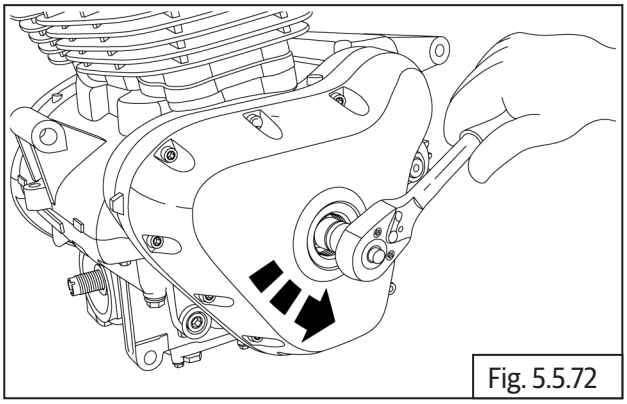
Fig. 5.5.72

	17 mm Socket with Ratchet

- Loosen and remove 1st Hex head bolt **(M8) (a)** from cam sprocket.

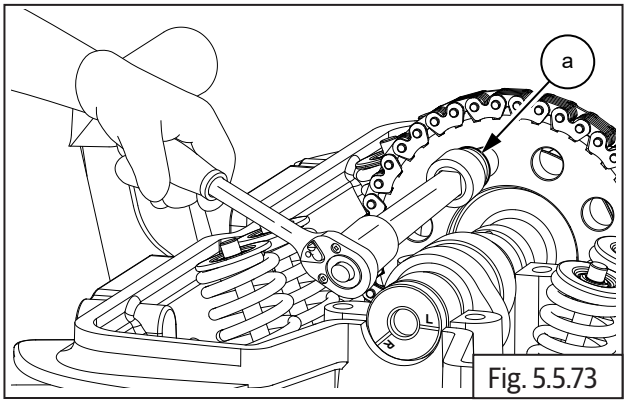

Fig. 5.5.73

	12 mm Socket with Ratchet

- Rotate magneto rotor slowly till one of the Hex head bolts on cam chain sprocket appears at the top most position..

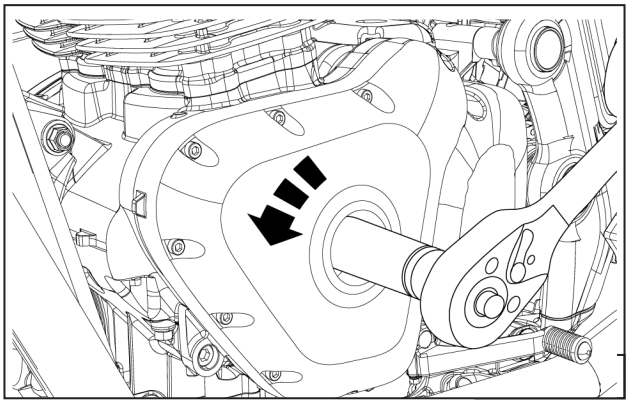

	17 mm Socket with Ratchet

- Loosen and remove 2nd Hex head bolt **(M8) (a)** from cam sprocket.

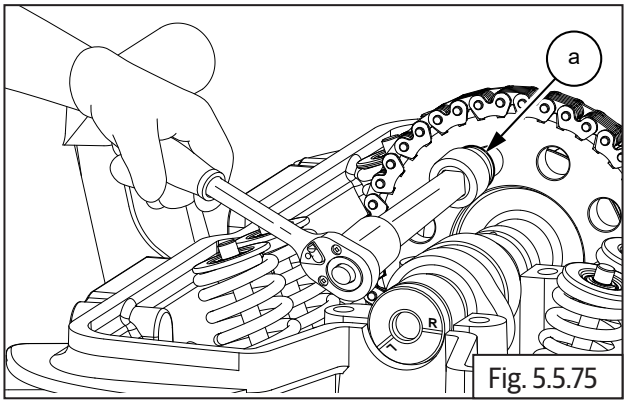

Fig. 5.5.75

	12 mm Socket with Ratchet

- Remove "C" washer **(a)** from groove in cylinder head LH to release cam shaft.

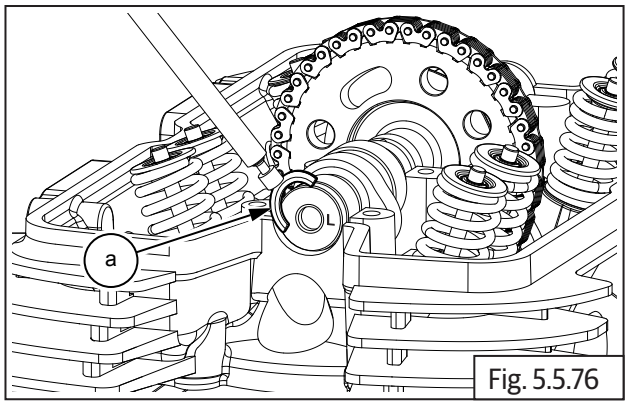

Fig. 5.5.76

	Magnetic stick

- Gently release timing chain **(a)** from camshaft sprocket and remove camshaft **(b)** from cylinder head assembly.

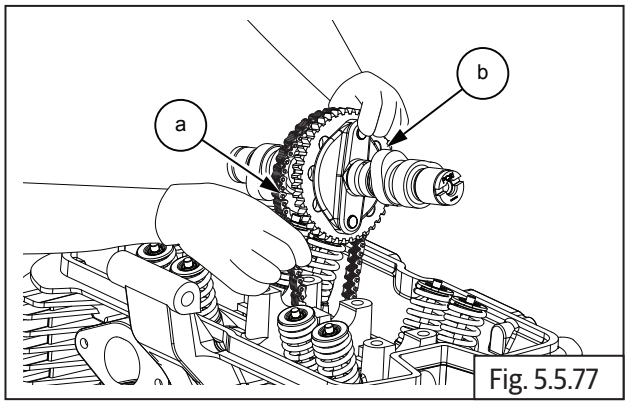

Fig. 5.5.77

- Support timing chain suitably at the top to prevent it from dropping into the crankcase.

5.5.24. Magneto Cover

- Loosen and remove 12 Nos. Hex socket head bolts **(M6) (a)** in crisscross pattern to remove magneto cover **(b)** from LH.

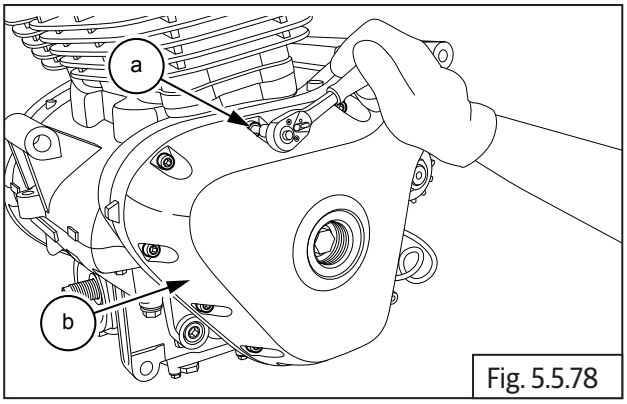

Fig. 5.5.78

	5 mm Allen socket with Ratchet

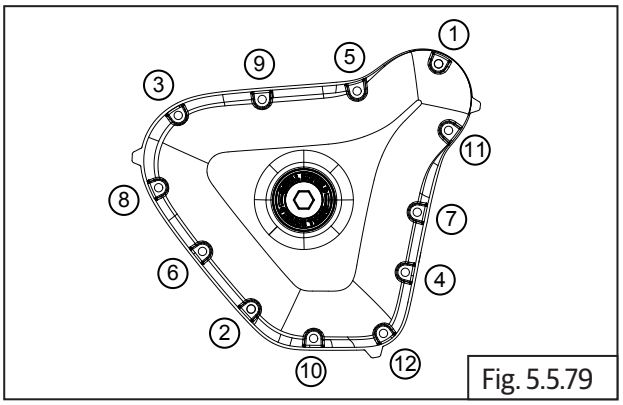

Fig. 5.5.79

- The magneto cover may be hard to remove from crankcase, due to the magnetic force from the magneto acting on the stator coil.
- Gently tap on the tabs **(a)** with a plastic / rubber mallet, on the inside edges of the magneto cover, to remove.

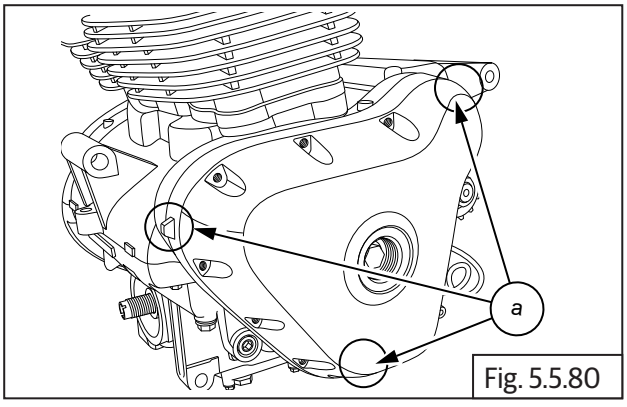

Fig. 5.5.80

	Plastic/Rubber mallet

- Remove gasket **(a)**.

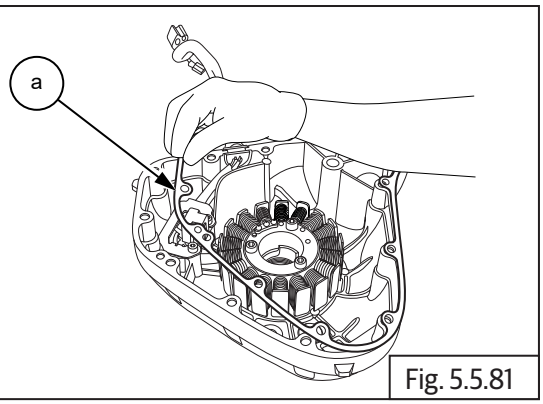

Fig. 5.5.81

⚠ CAUTION

Do not use a sharp tool to scrap the gasket material from the joint faces.

If required scrap only with a soft and blunt tool.

- Remove the 2 dowel pins **(a)** and **(b)** from the crankcases/magneto cover.

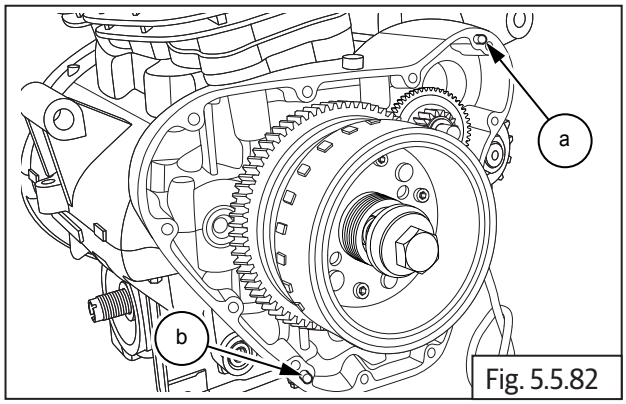

Fig. 5.5.82

5.5.25. Stator Assembly with CPS

Stator Assembly with Crank Position Sensor (CPS)

- Loosen and remove 3 Nos. Hex socket head screws **(M6) (a)** holding the stator assembly **(b)**.

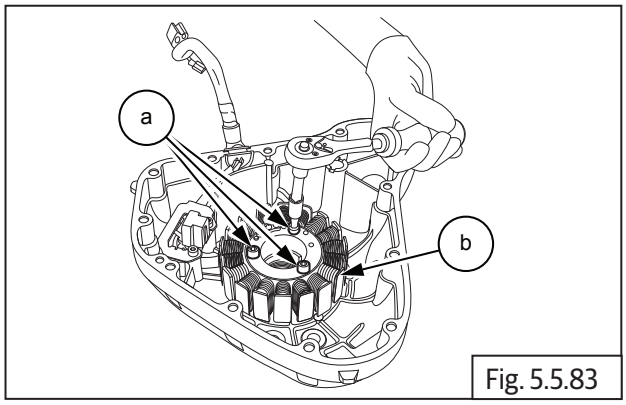

Fig. 5.5.83

	5 mm Allen socket with Ratchet

- Loosen and remove 2 Nos. Hex socket head screws **(M6) (a)** on guide plate **(b)**, holding crank position sensor to magneto cover.

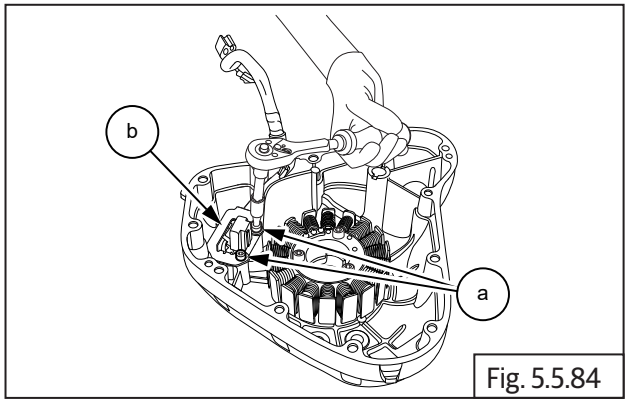

Fig. 5.5.84

	5 mm Allen socket with Ratchet

- Remove the guide plate **(a)** from magneto cover.

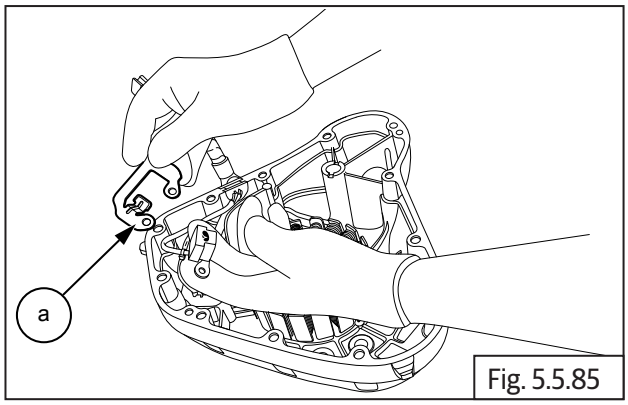

Fig. 5.5.85

- Gently release the wiring grommet **(a)** from the magneto cover.
- Gently remove stator assembly **(b)** from magneto cover.

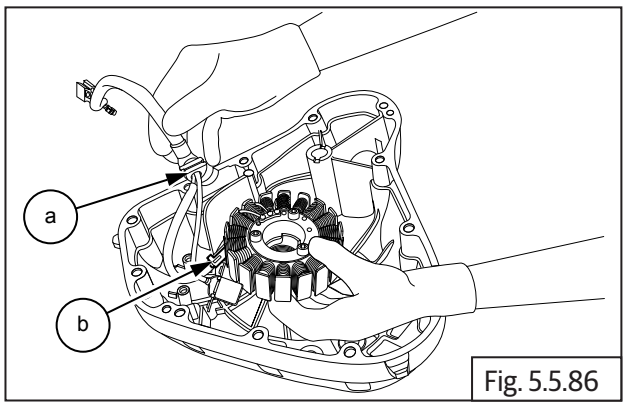

Fig. 5.5.86

5.5.26. Magneto Rotor Bolt

- In order to loosen magneto rotor bolt, it will be necessary to remove clutch cover.
- Insert special tool **(a)** in crankcase RH to lock the crankshaft and prevent rotation.

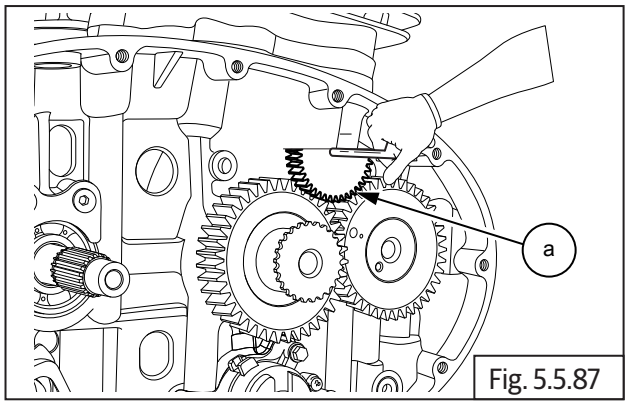

Fig. 5.5.87

SPL 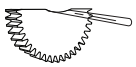	Part No: ST-27533-2
	Part Name: Crank Gears locking tool

- Loosen and remove Hex flange head bolt **(M12) (a)**.

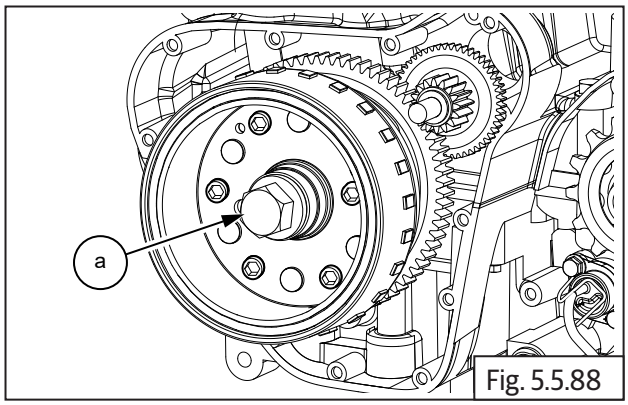

Fig. 5.5.88

	17 mm Socket with Ratchet

- Ensure center bolt of magneto rotor puller is loosened sufficiently.
- Assemble puller **(b)** on magneto rotor **(a)** and thread in fully.
- Tighten center bolt onto puller till magneto rotor gets released from crankshaft.

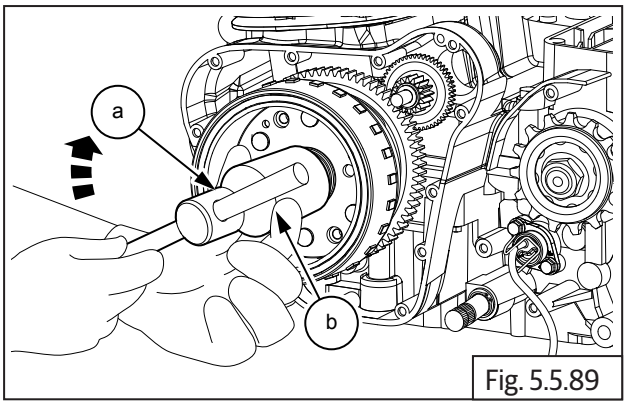

Fig. 5.5.89

SPL	Part No: ST30274/a
	Part Name: Magneto Puller Assembly

- Gently pull out magneto rotor assembly **(a)** with starter clutch.

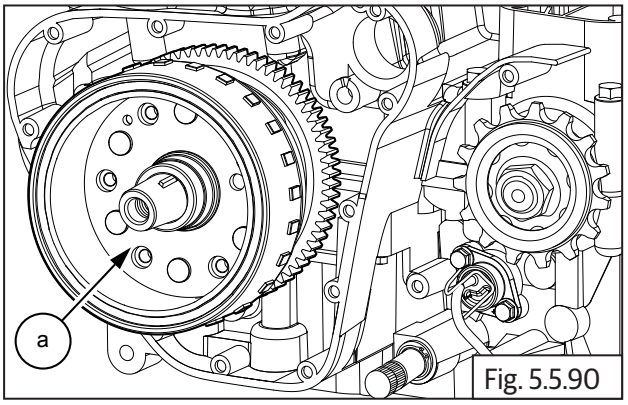

Fig. 5.5.90

- Remove woodruff key **(a)** from crankshaft.

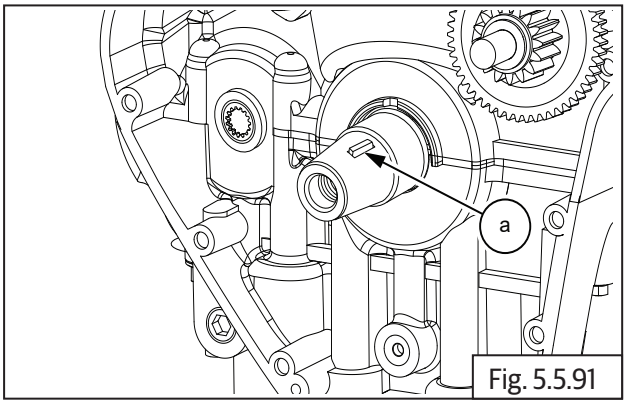

Fig. 5.5.91

5.5.27. Starter Clutch from Magneto Rotor

- Slightly loosen 6 Nos. Hex socket head screws **(M6) (a)** from inside magneto rotor. **Do not LOOSEN AND REMOVE FULLY**.

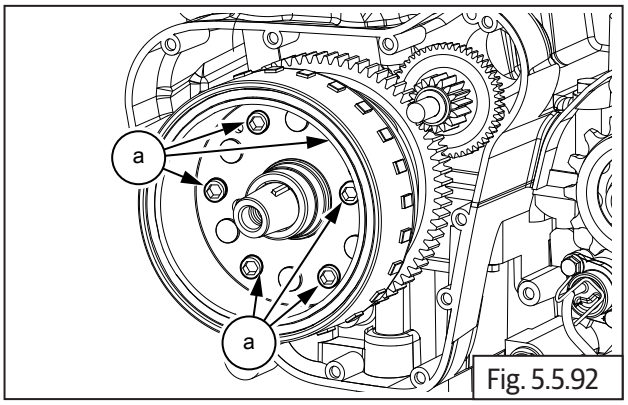

Fig. 5.5.92

	5 mm Allen socket with Ratchet

- Remove magneto rotor assembly **(a)** from crank shaft, hold the rotor firmly, rotate gear starter clutch **(b)** anti-clockwise and pull out simultaneously to separate rotor from the gear.

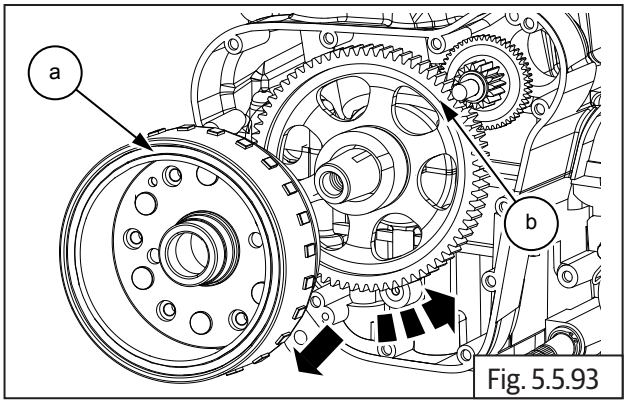

Fig. 5.5.93

- Remove starter idle gear **(a)**.

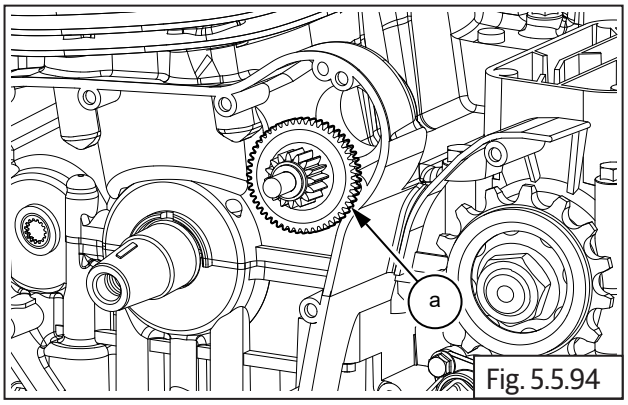

Fig. 5.5.94

- Loosen and remove 6 Nos. Hex socket head screws **(M6) (a)** from inside magneto rotor **(b)** and

separate starter clutch with outer ring **(c)**.

- Remove starter clutch from outer ring.

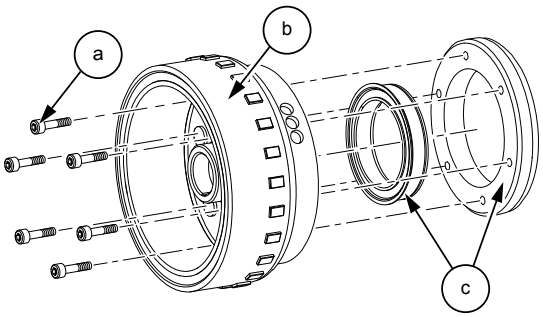

Fig. 5.5.95

	5 mm Allen socket with Ratchet

5.5.28. Gear Position Sensor

- Loosen and remove 2 Nos. Hex head bolts **(M6) (a)** along with bracket located below the FD sprocket **(b)**.

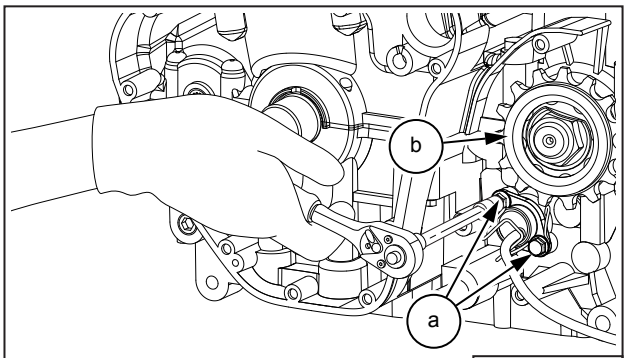

Fig. 5.5.96

	10 mm Socket with Ratchet

- Remove cable holder **(a)**.

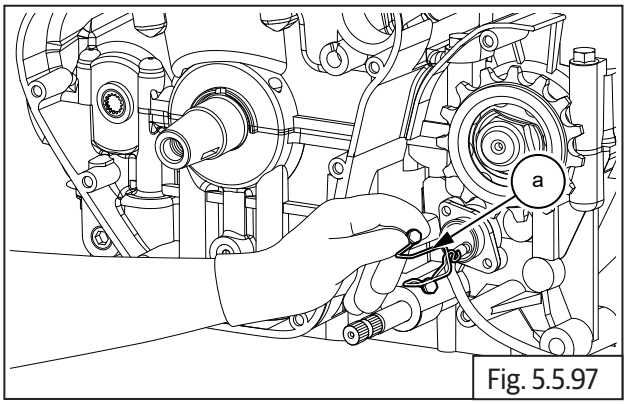

Fig. 5.5.97

- Gently remove gear position sensor **(a)** along with the gasket.

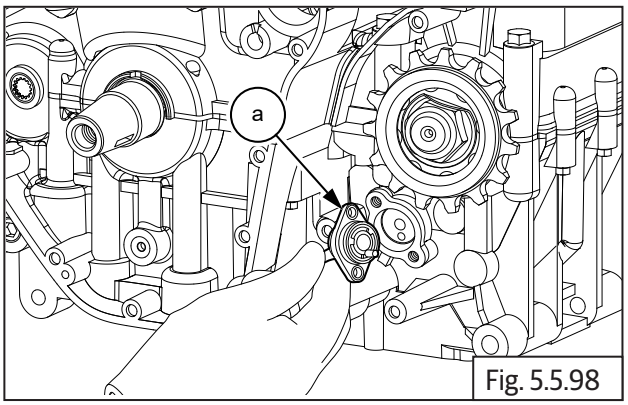

Fig. 5.5.98

5.5.29. FD Sprocket

- Tap to open lock tab holder **(a)** located over FD sprocket **(b)**.

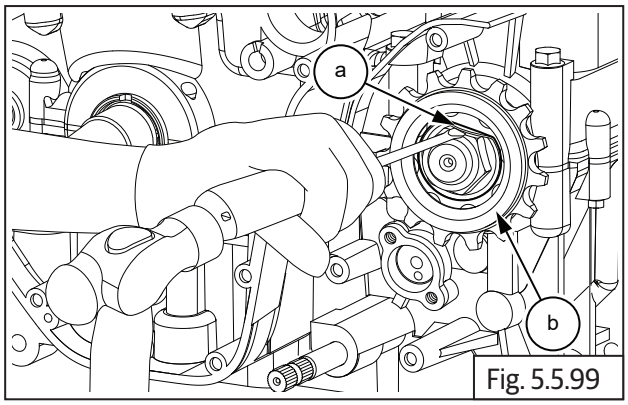

Fig. 5.5.99

	Chisel and Hammer

- Locate special tool over FD sprocket **(a)** and loosen "U" nut **(M20) (b)**.

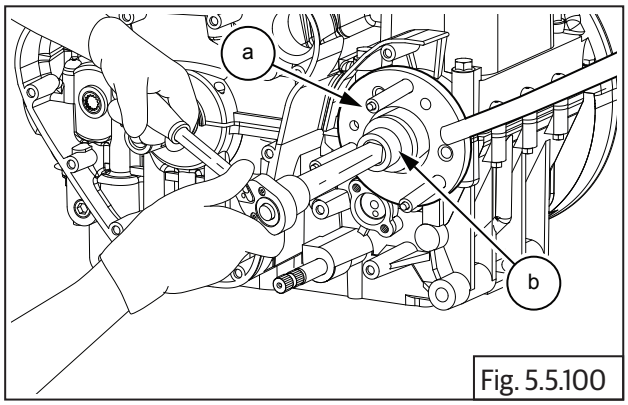

Fig. 5.5.100

SPL	Part No: ST-27534-2
	Part Name: FD sprocket holder
	30 mm Socket with Ratchet

- Remove lock tab washer **(a)** from shaft.

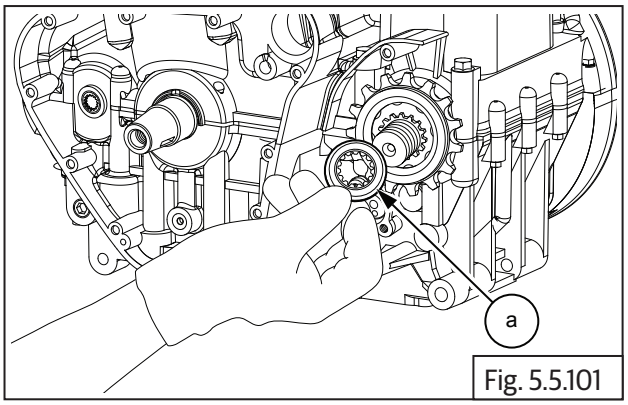

Fig. 5.5.101

- Remove FD sprocket **(a)** from drive shaft **(b)**.

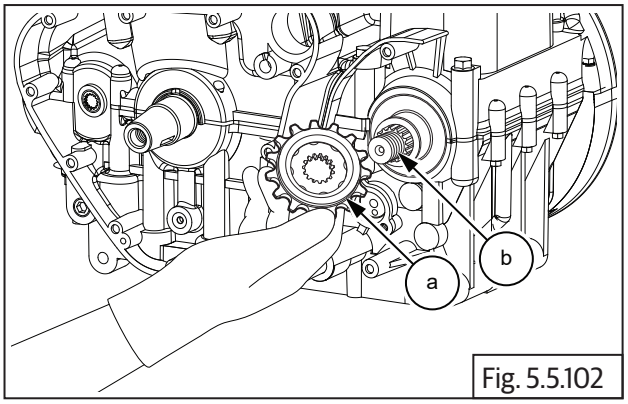

Fig. 5.5.102

- Gently remove spacer **(a)** from drive shaft.

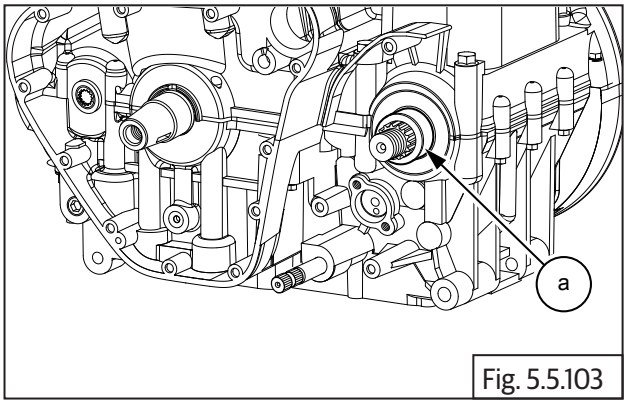

Fig. 5.5.103

⚠ CAUTION

Do not use sharp tool to remove spacer as it may damage the parts.

5.5.30. Cylinder Head

- Remove oil temperature sensor (section 10.1.8).

⚠ CAUTION

Cylinder bolts and washers are one time usage only. Always use new head bolts and washersduring installation. Dispose old head bolts suitably.

- Loosen and remove 8 Nos. Hex head bolts **(M10) (a)** in crisscross pattern on cylinder head.

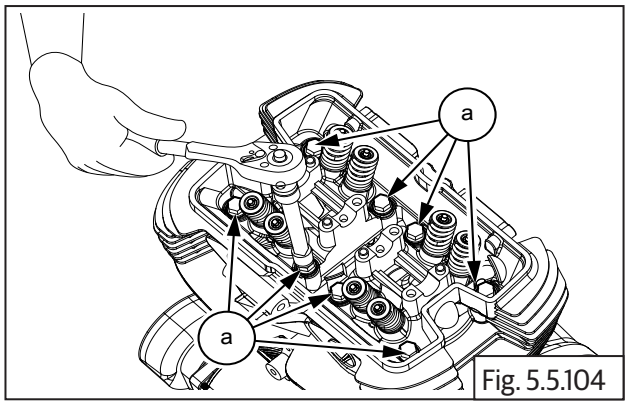

Fig. 5.5.104

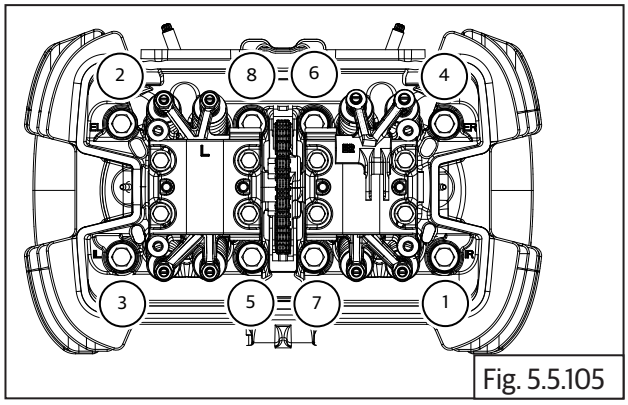

Fig. 5.5.105

	12 mm Socket with Ratchet

- Support cam chain suitably and gently remove cylinder head **(a)** from cylinder barrel **(b)**.

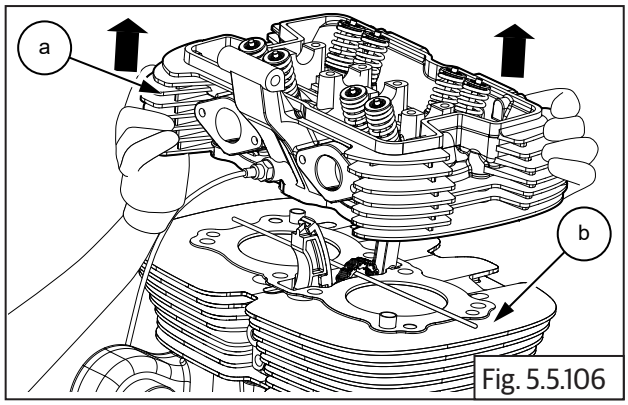

Fig. 5.5.106

- Remove the cylinder head gasket **(a)** from cylinder barrel **(b)**.

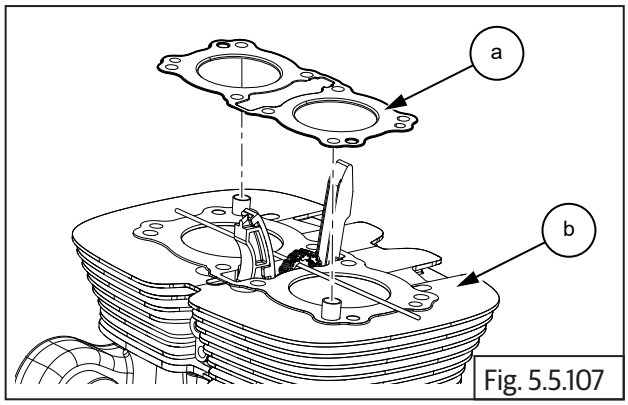

Fig. 5.5.107

5.5.31. Components from Cylinder Head

Valves and Springs

- Compress valve spring with special tool **(a)**.

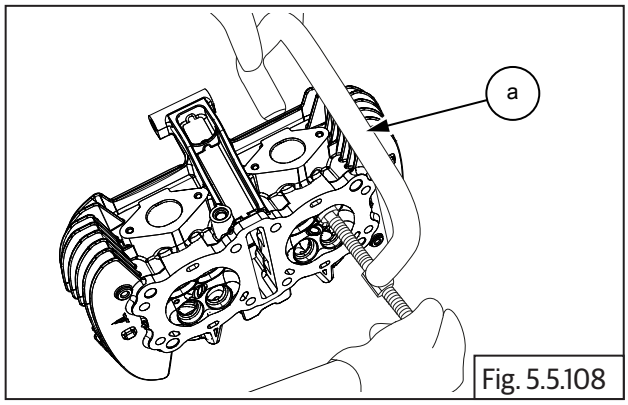

Fig. 5.5.108

SPL	Part No: ST-27528-2
	Part Name: Valve spring compressor

- Remove the cotters **(a)** on valve stem at the top.

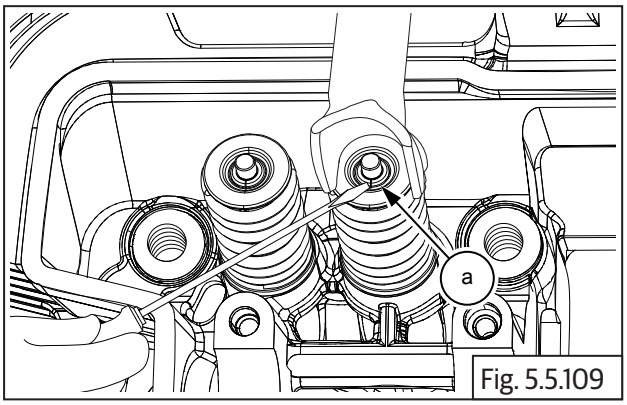

Fig. 5.5.109

SPL	Part No: ST-27528-2
	Part Name: Valve spring compressor

- Gently loosen the screw on valve spring compressor, till the valve spring tension is completely released and remove the special tool.

⚠ CAUTION

Valve spring under high tension when compressed .

Release valve spring compressor tool slowly and with care.

- Remove the retainer, valve spring **(a)** from the top of the valve spring **(b)**.

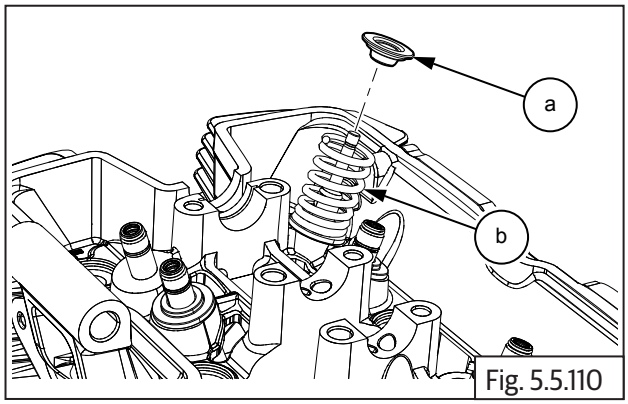

Fig. 5.5.110

- Remove valve spring **(a)** from valve stem **(b)**.

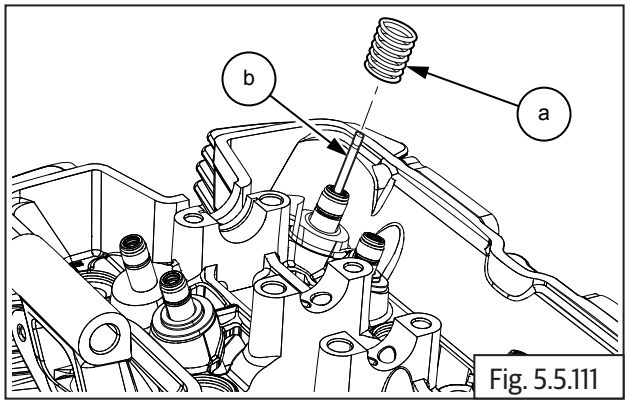

Fig. 5.5.111

- Remove valve **(a)** from cylinder head **(b)** by pulling it out from the cylinder head inside.

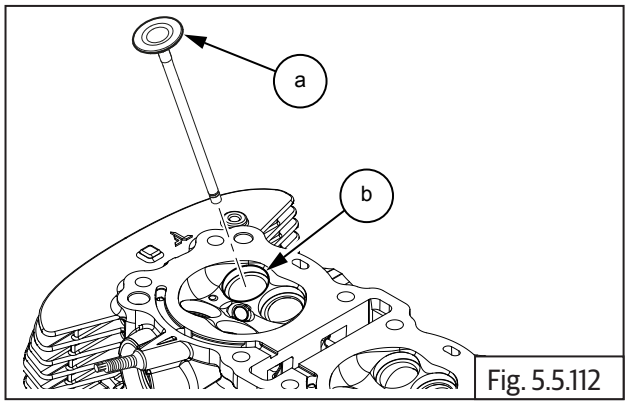

Fig. 5.5.112

- Remove valve stem seal **(a)** from valve guide **(b)**.

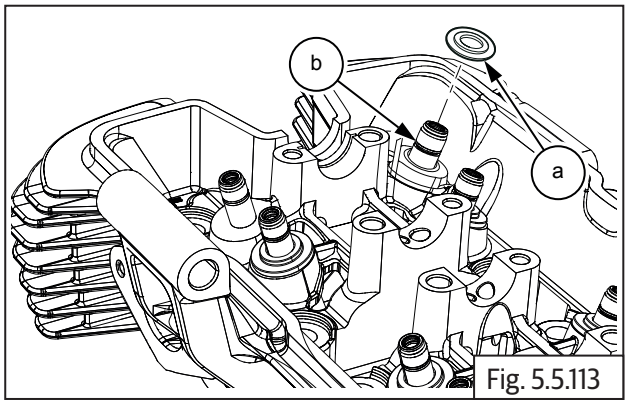

Fig. 5.5.113

- Follow the same procedure to remove the other valves from the cylinder head.

5.5.32. Floating Chain Pad

- Remove the floating chain pad **(a)** from front end of the cylinder barrel.

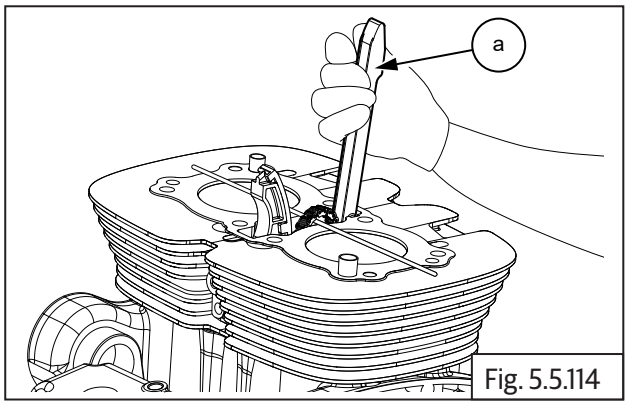

Fig. 5.5.114

5.5.33. Cylinder Barrel

- Slightly tilt and gently remove the cylinder barrel **(a)** from crankcase **(b)**.

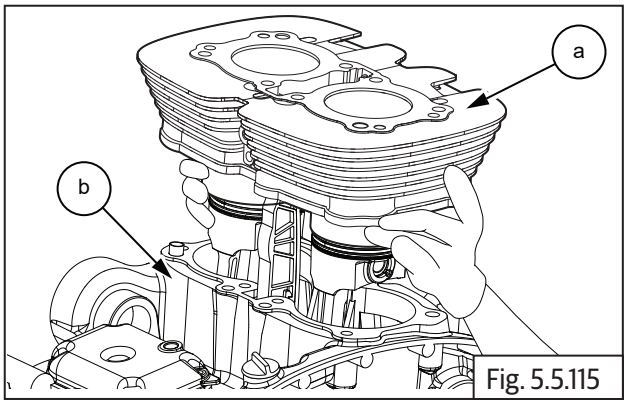

Fig. 5.5.115

5.5.34. Pistons

- Remove the circlip **(a)** from piston.

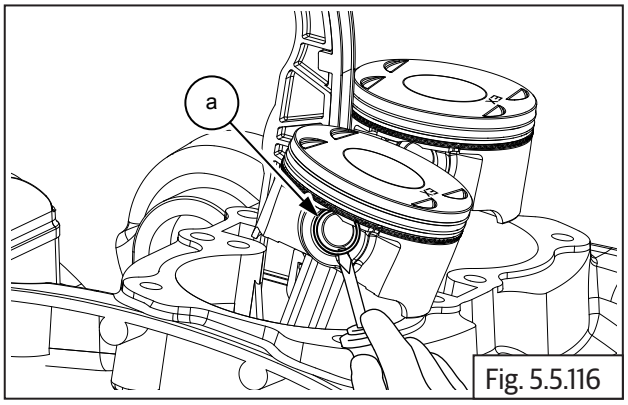

Fig. 5.5.116

	Screw driver

- Gently push out the gudgeon pin **(a)** to release the piston.

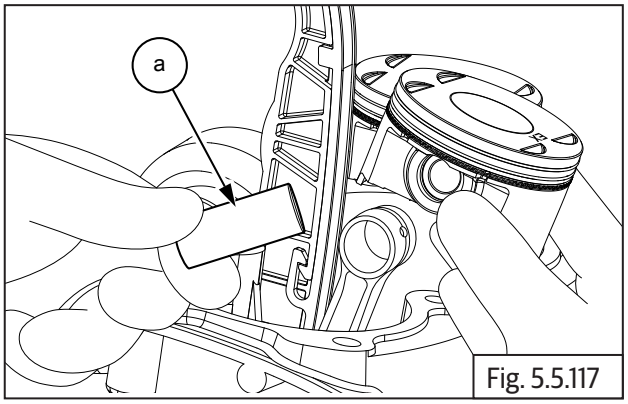

Fig. 5.5.117

- Repeat the procedure for other piston.

5.5.35. Oil Pressure Switch

- Loosen and remove pressure switch **(a)** along with washers **(b)** from bottom of the crankcase RH.

NOTE
• *Washer to be replaced whenever removed. Do not reuse the washer.*

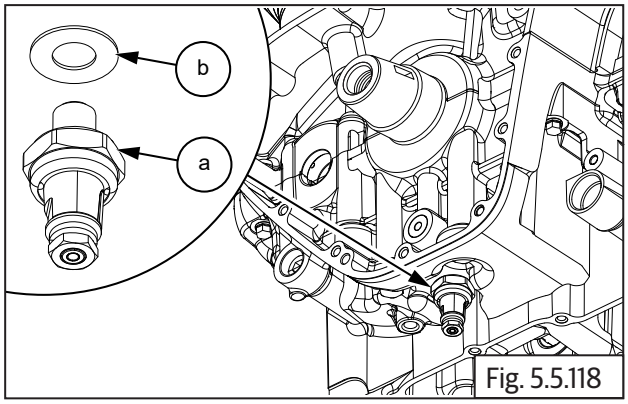

Fig. 5.5.118

	21 mm Socket with Ratchet

5.5.36. Oil Pan

- Support upper crankcase on suitable wedges such that the oil pan is facing upwards.
- Loosen and remove the 13 Nos. Hex bolts **(M6) (a)** in crisscross pattern from sump.

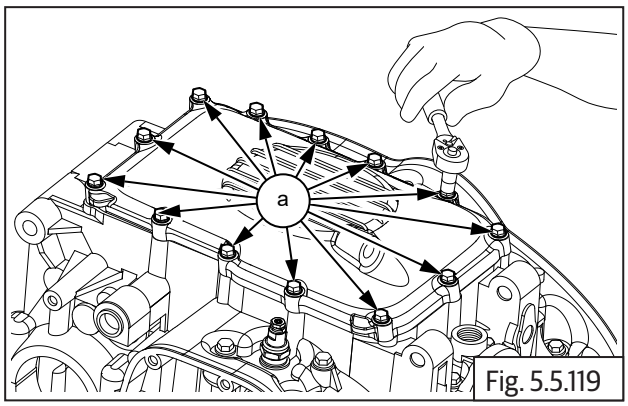

Fig. 5.5.119

	10 mm Socket with Ratchet

Crankcase Bolts Slackening Sequence Procedure

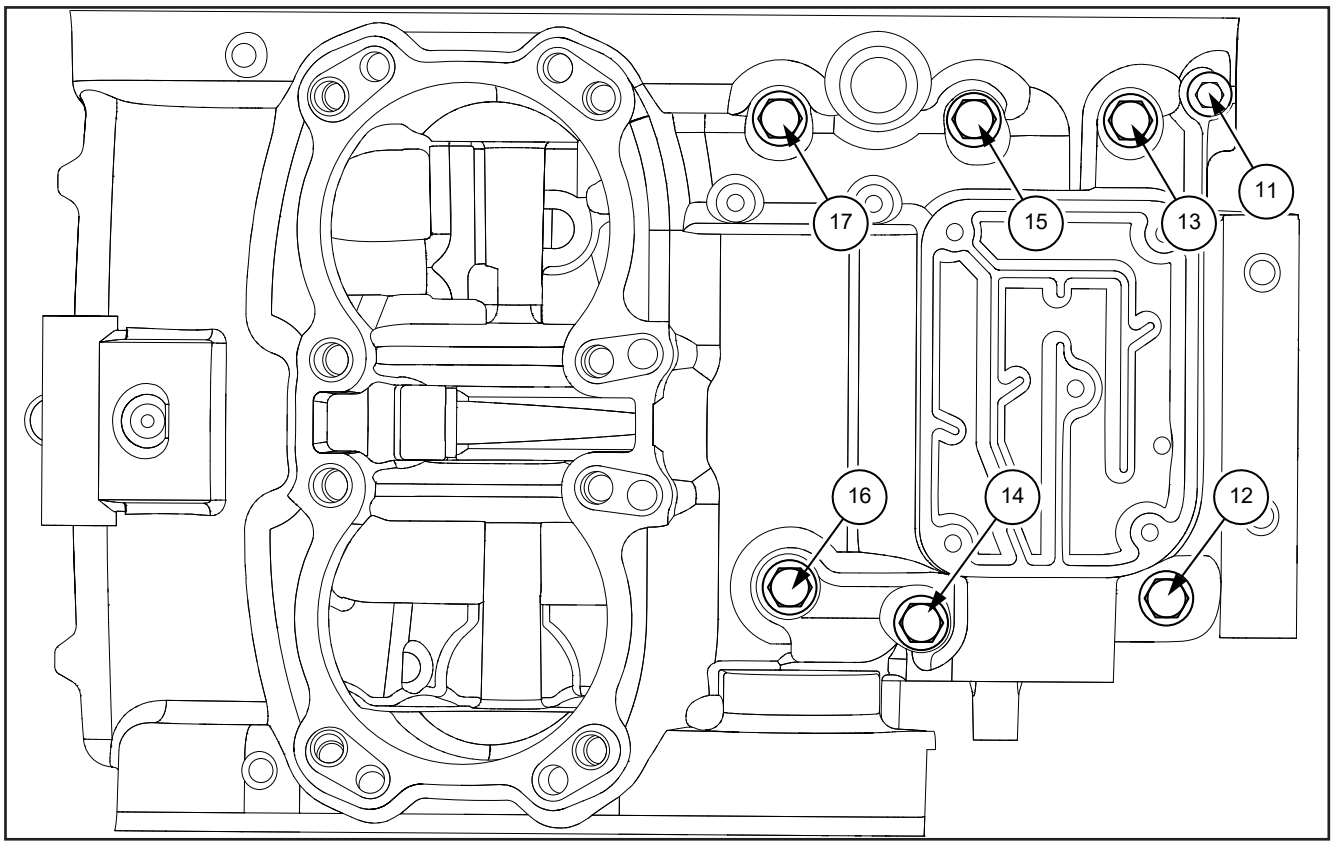

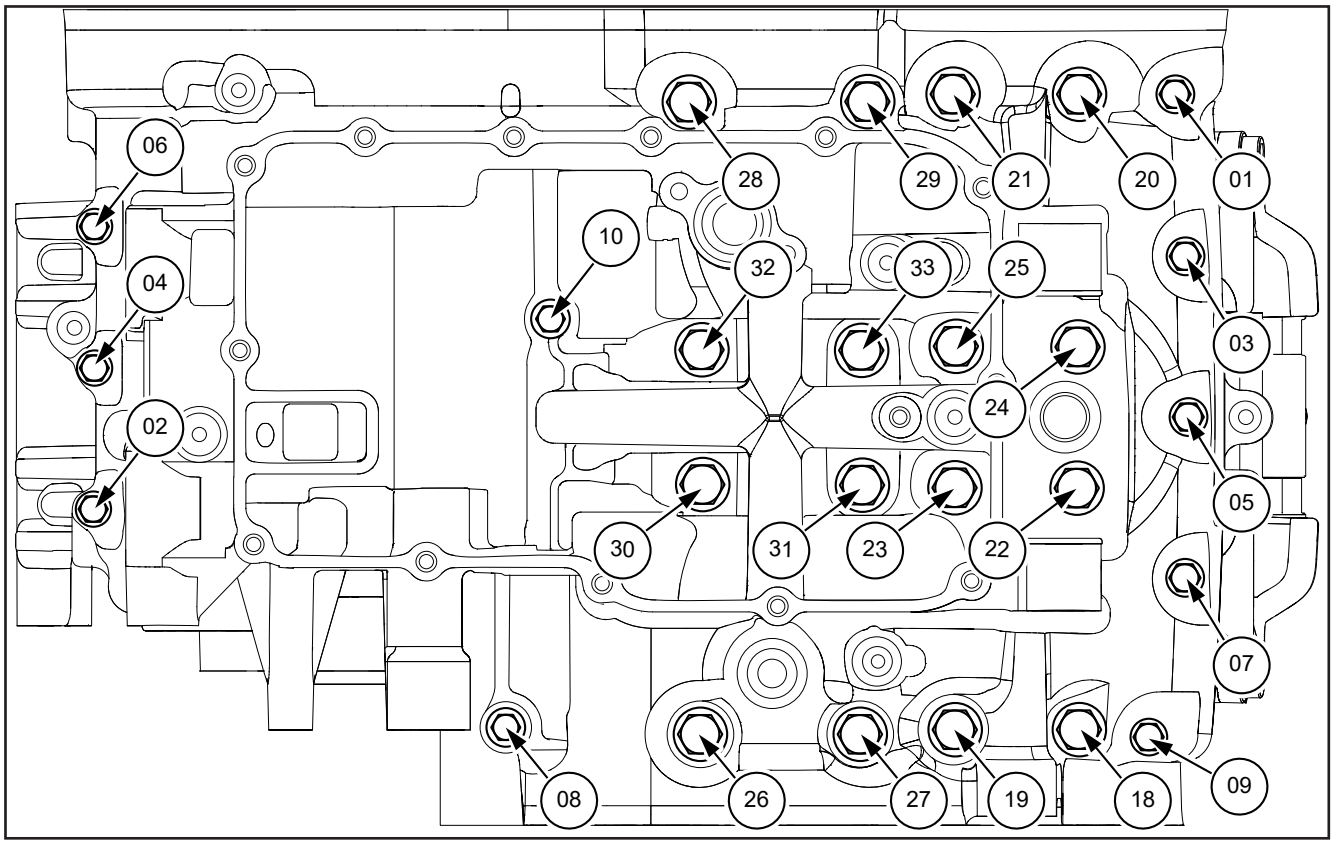

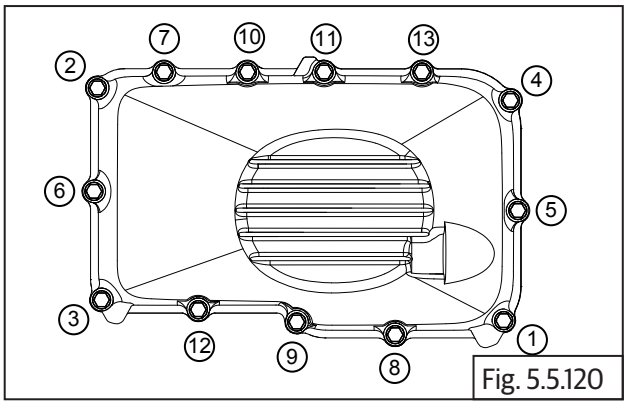

Fig. 5.5.120

- Remove sump cover **(a)** along with gasket **(b)** from bottom crankcase.

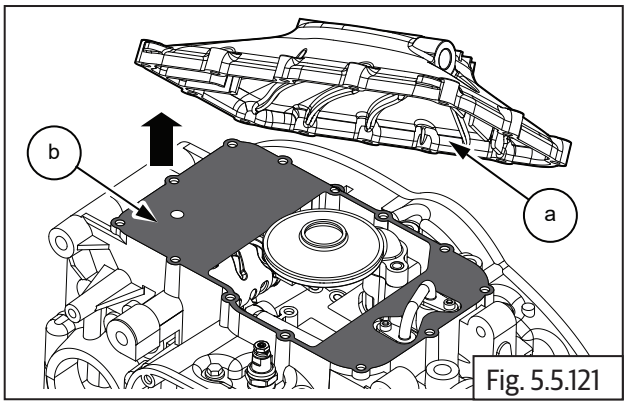

Fig. 5.5.121

5.5.37. Oil Strainer

- Loosen and remove 2 Nos. Hex flange head bolts **(M6) (a)** to remove oil strainer **(b)** along with O-ring **(c)**.

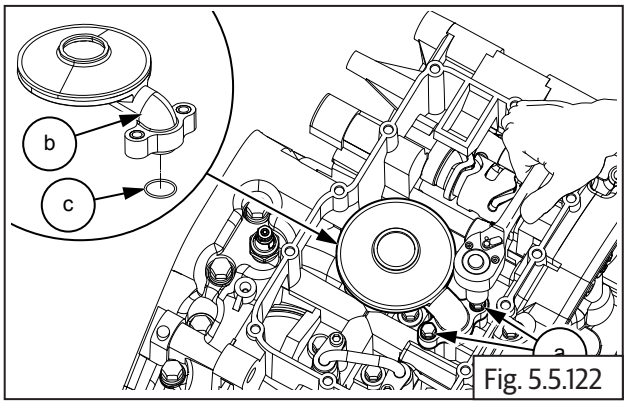

Fig. 5.5.122

	10 mm Socket with Ratchet

⚠ CAUTION

Do not reuse O-ring. Always use new O-ring during installation.

5.5.38. Oil Bypass

- Loosen and remove Hex socket head cap screw **(M6) (a)** to remove bypass **(b)** from crankcase.
- Remove the O - rings with the bypass pipe.

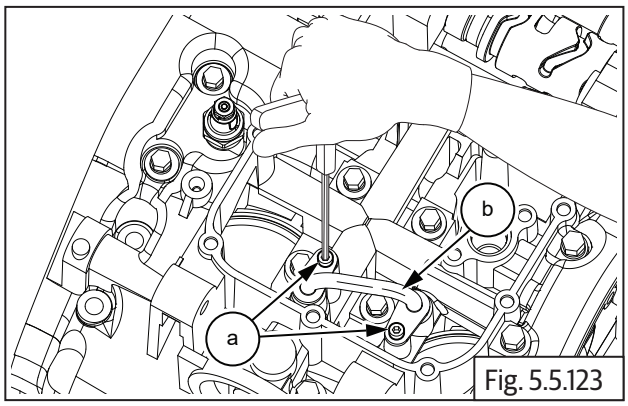

Fig. 5.5.123

5.5.39. Crankcase Fasteners

Fasteners on Upper Crankcase

Description	Quantity
M8 x 1.25 x 80	3
M8 x 1.25 x 105	2
M6 x 1.25 x 35	1
M8 x 1.25 x 45	1

- Support crankcase assembly on suitable wedges such that the fasteners on the upper crankcase can be removed.
- Loosen and remove 2 Nos. Hex flange bolts **M8 X 1.25 X 105 (a)** near oil filler hole on RH side (clutch side) of upper crankcase.

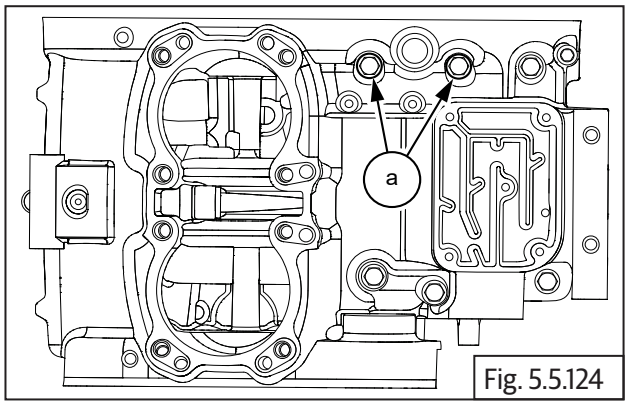

Fig. 5.5.124

	13 mm Socket with Ratchet

- Loosen and remove 1 No. Hex flange bolt **M8 X 1.25 X 80 (a)** near breather box housing on RH side (clutch side) of upper crankcase.

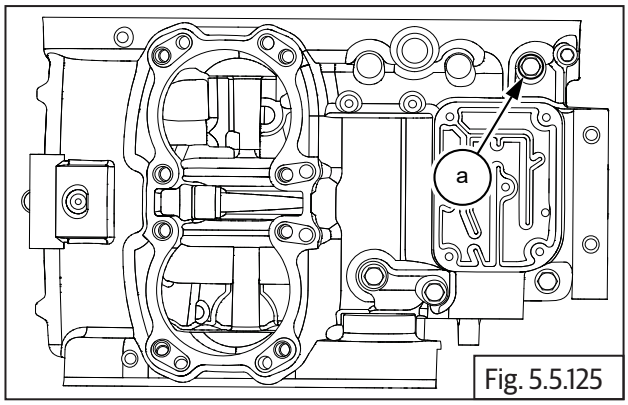

Fig. 5.5.125

	13 mm Socket with Ratchet

- Loosen and remove 1 No. Hex flange bolt **M6 X 1 X 35 (a)** from the rear RH side (clutch side) of upper crankcase.

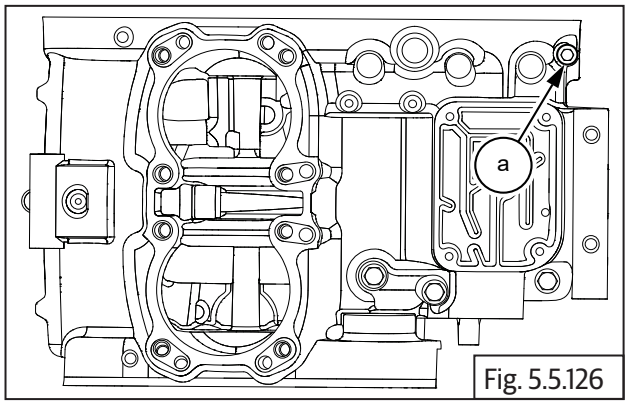

Fig. 5.5.126

	8 mm Socket with Ratchet

- Loosen and remove 1 No. Hex flange bolt **M8 X 1.25 X 45 (a)** from starter motor recess on LH side (magneto side) of upper crankcase.

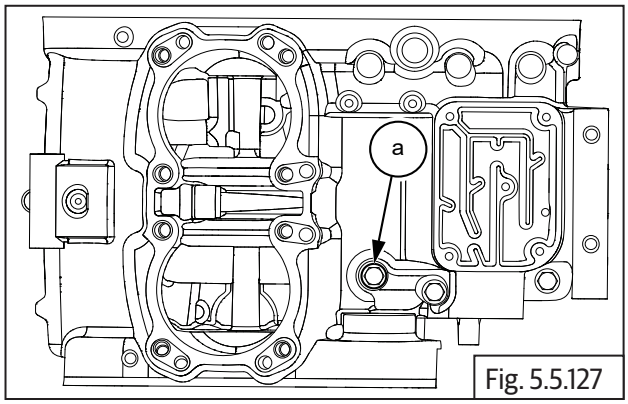

Fig. 5.5.127

	13 mm Socket with Ratchet

- Loosen and remove 2 Nos. Hex flange bolt **M8 X 1.25 X 80 (a)** (1 each from starter motor recess and FD sprocket spigot area) on LH side (magneto side) of upper crankcase.

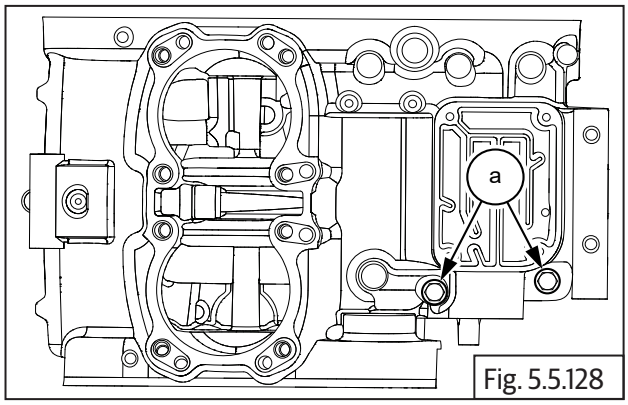

Fig. 5.5.128

	13 mm Socket with Ratchet

Fasteners on Lower Crankcase

Description	Quantity
M6 x 1.25 x 35	8
M8 x 1.25 x 80	9
M8 x 1.25 x 120	5
M6 x 1.25 x 85	1
M6 x 1.25 x 55	1
M8 x 1.25 x 150	2

- Gently invert crankcase assembly such that the upper crankcase is resting firmly on suitable wedges and the fasteners from lower crankcase can be removed.
- Loosen and remove 5 Nos. Hex flange bolts **M6 X 1 X 35 (a)** from the front end of lower crankcase.

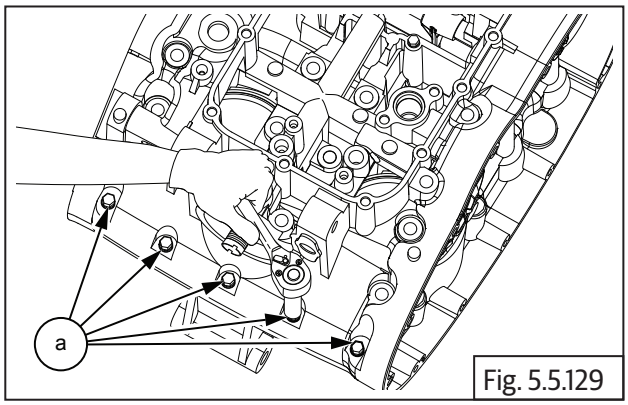

Fig. 5.5.129

	8 mm Socket with Ratchet

- Loosen and remove 3 Nos. Hex flange bolts **M6 X 1 X 35 (a)** from the rear end of lower crankcase.

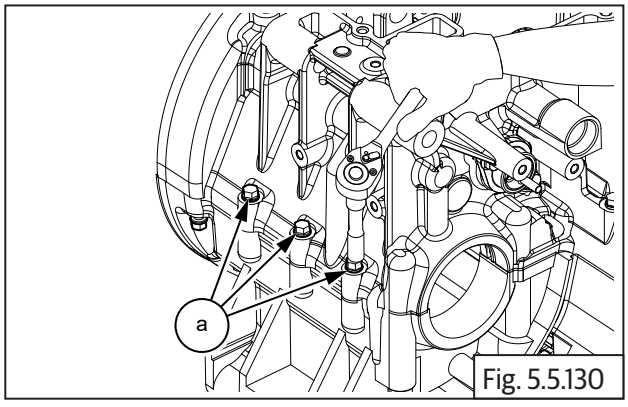

Fig. 5.5.130

	8 mm Socket with Ratchet

- Loosen and remove 6 Nos. Hex flange bolts **M8 X 1.25 X 80 (a)** in crisscross pattern from the centre of lower crankcase inside oil sump area.

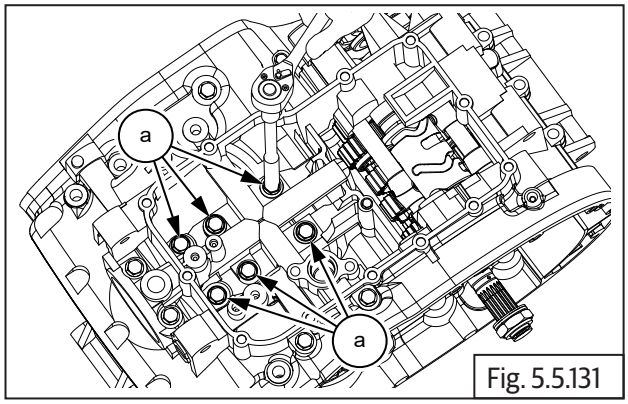

Fig. 5.5.131

	13 mm Socket with Ratchet

- Loosen and remove 2 Nos. Hex flange bolts **M8 X 1.25 X 120 (a)** from oil filter element mounting area in the lower crankcase front side.

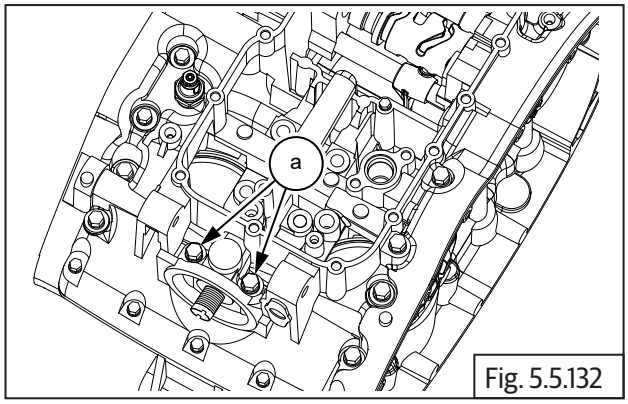

Fig. 5.5.132

	13 mm Socket with Ratchet

- Loosen and remove 1 No. Hex flange head bolt **M6 X 1 X 85 (a)** from the centre of lower crankcase inside oil sump area.

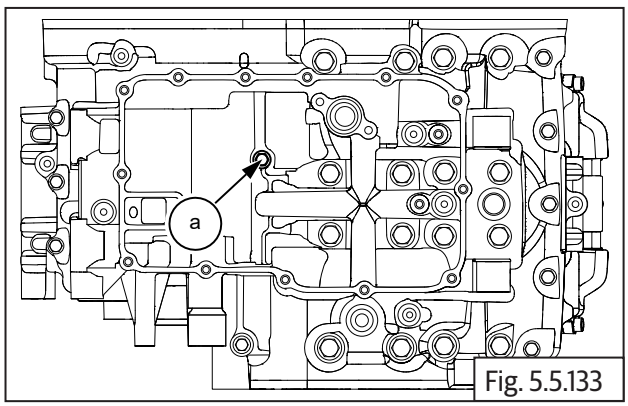

Fig. 5.5.133

	8 mm Socket with Ratchet

- Loosen and remove 1 No. Hex flange head bolt **M6 X 1 X 55 (a)** from the lower crankcase LH side (Magneto side).

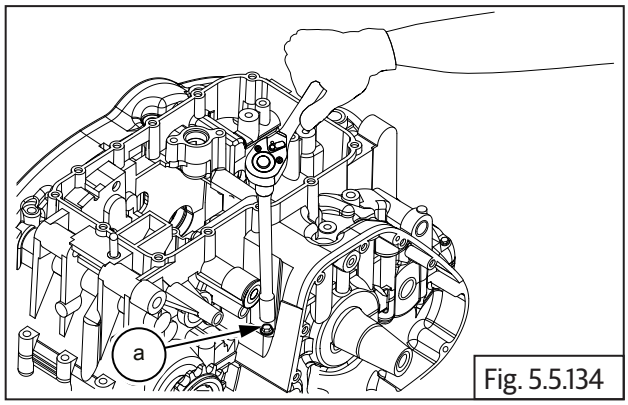

Fig. 5.5.134

	8 mm Socket with Ratchet

- Loosen and remove 2 Nos. Hex flange bolts **M8 X 1.25 X 150 (a)** from the lower crankcase LH side (Magneto side).

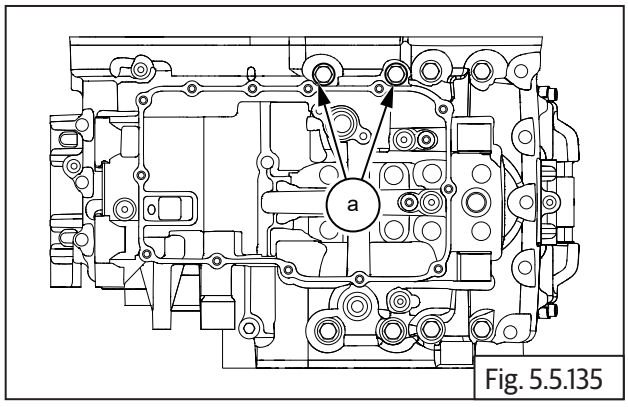

Fig. 5.5.135

	13 mm Socket with Ratchet

- Loosen and remove 1 No. Hex flange bolt **M8 X 1.25 X 120 (a)** from the lower crankcase LH side (Magneto side).

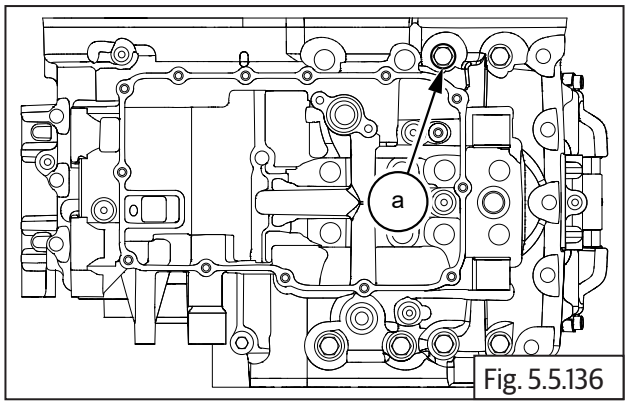

Fig. 5.5.136

	13 mm Socket with Ratchet

- Loosen and remove 1 No. Hex flange bolt **M8 X 1.25 X 80 (a)** from the lower crankcase LH side (Magneto side).

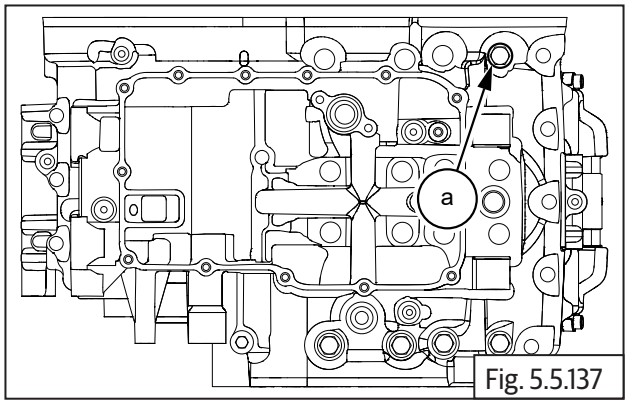

Fig. 5.5.137

	13 mm Socket with Ratchet

- Loosen and remove 2 Nos. Hex flange bolts **M8 X 1.25 X 120 (a)** from the lower crankcase RH side (clutch side).

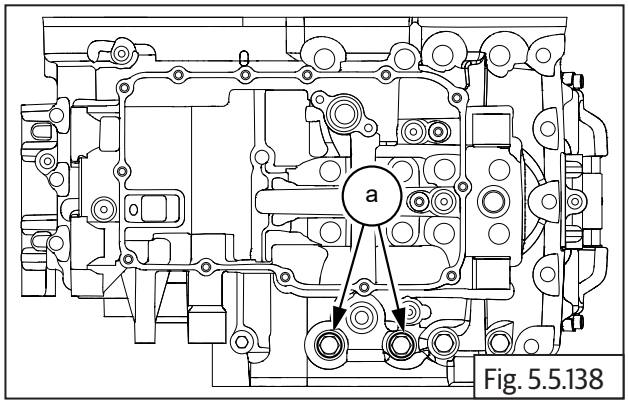

Fig. 5.5.138

	13 mm Socket with Ratchet

- Loosen and remove 2 Nos. Hex flange bolts **M8 X 1.25 X 80 (a)** from the lower crankcase RH side

(clutch side).

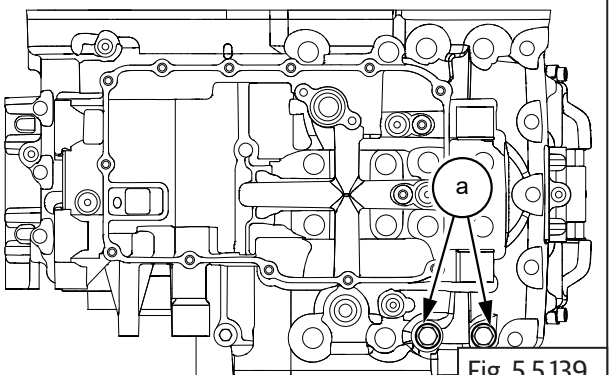

Fig. 5.5.139

	13 mm Socket with Ratchet

5.5.40. Splitting Crankcase

- Ensure the upper crankcase is supported firmly on suitable wedges with the lower crankcase facing upwards.
- Gently separate the lower crankcase from the upper crankcase by slightly tapping on the tabs **(a)** provided in lower crankcase, to release from the dowels and sealing gasket material.

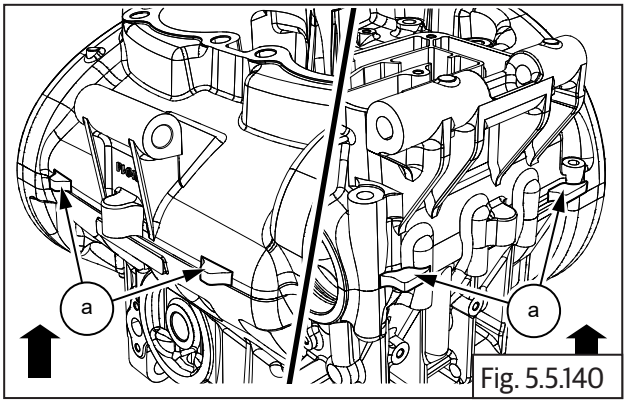

Fig. 5.5.140

- Remove lower crankcase along with the gear selector drum, from the upper crankcase.

⚠ CAUTION

Ensure all the mounting fasteners on the lower and upper crankcase have been removed.

Ensure the gear shift forks are not jammed in the grooves in the gears.

Ensure the dowels are removed from the upper and lower crankcases.

Main M8 bolts and washers 16 nos are non reusable

5.5.41. Balancer Shaft

- Gently lift and remove balancer shaft **(a)** from upper crankcase **(b)**.

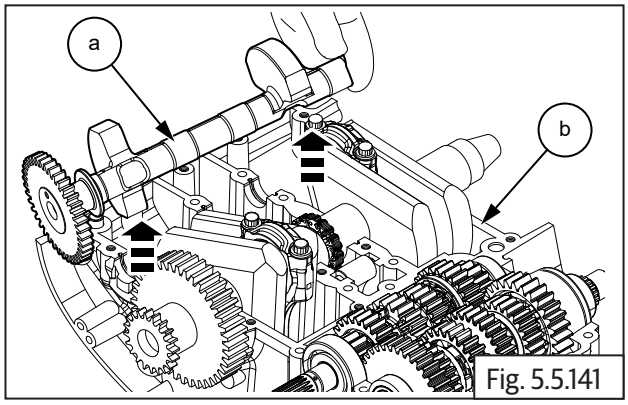

Fig. 5.5.141

5.5.42. Timing Chain Tensioner Pad

- Gently pull out timing chain tensioner pad **(a)** from crankcase.

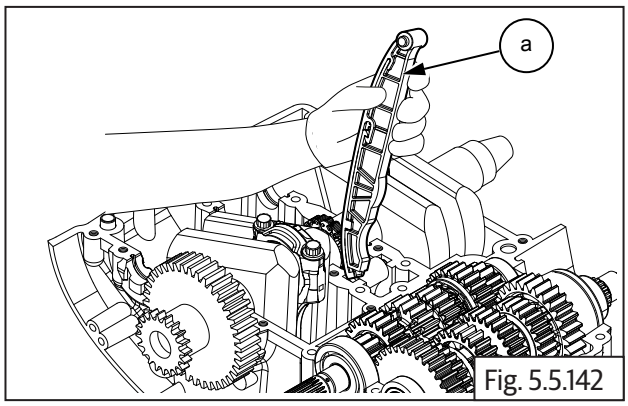

Fig. 5.5.142

5.5.43. Connecting Rod

- Loosen and remove 2 Nos. bi-hexagonal bolts **(M9) (a)** to disconnect connecting rod big end **(b)** from crankshaft **(c)**.

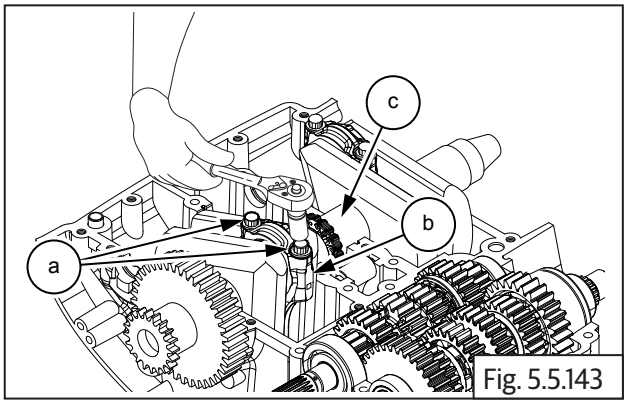

Fig. 5.5.143

	13 mm Bi-Hexgonal Socket with Ratchet

- Split the connecting rod's big end.

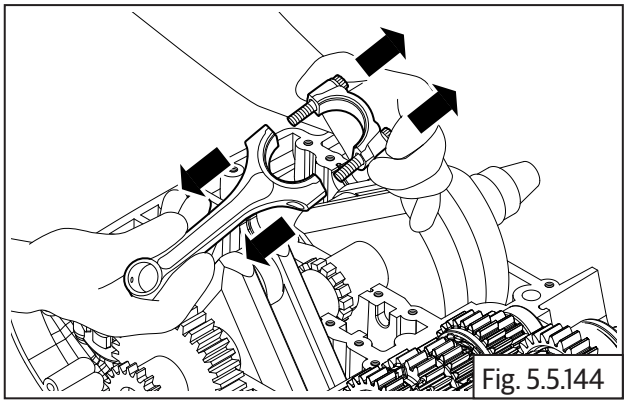
Fig. 5.5.144

- Repeat same procedure for other connecting rod.

NOTE
• *Make sure to mark connecting rod suitably to retain original position during installation.*

5.5.44. Crankshaft Assembly

⚠ CAUTION
Crankcase and connecting rod bolts are one time use only. **Bolts are non reusable**

- Gently lift and remove crankshaft assembly **(a)** from crankcase along with the cam chain **(b)**.

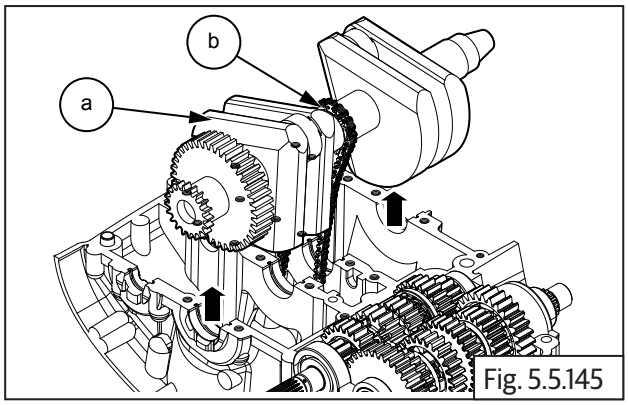

Fig. 5.5.145

- Release cam chain from the sprocket on the center of the crankshaft and remove.

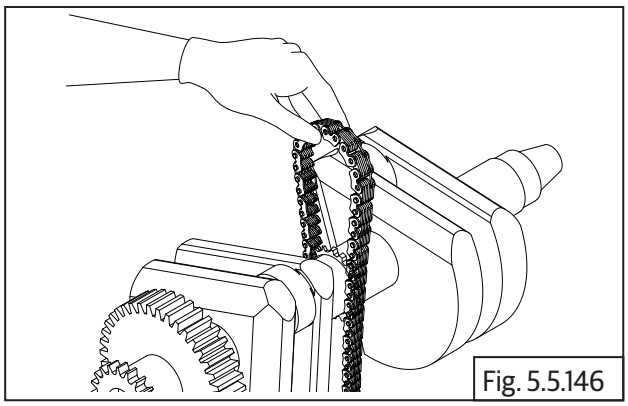
Fig. 5.5.146

5.5.45. Counter shaft

- Gently lift to remove transmission Counter shaft with gear assembly **(a)** from upper crankcase **(b)**.

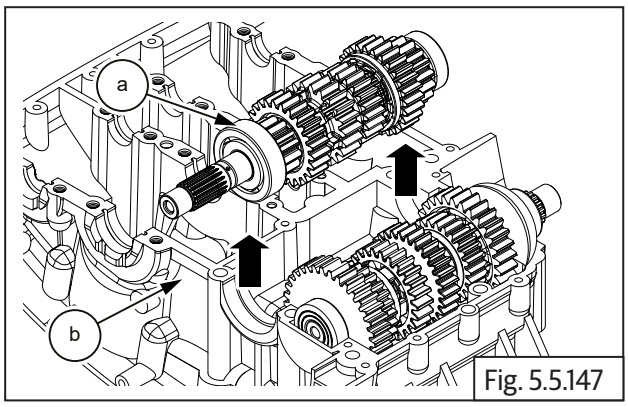

Fig. 5.5.147

- Remove the bearing **(a)** from the Counter shaft smaller end **(b)**.

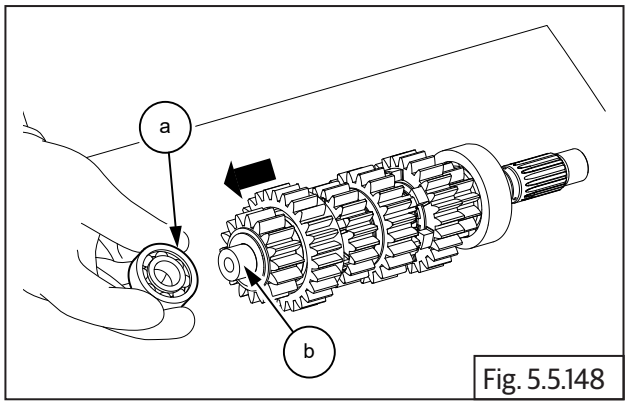

Fig. 5.5.148

- Remove thrust washer **(a)** from Counter shaft **(b)**.

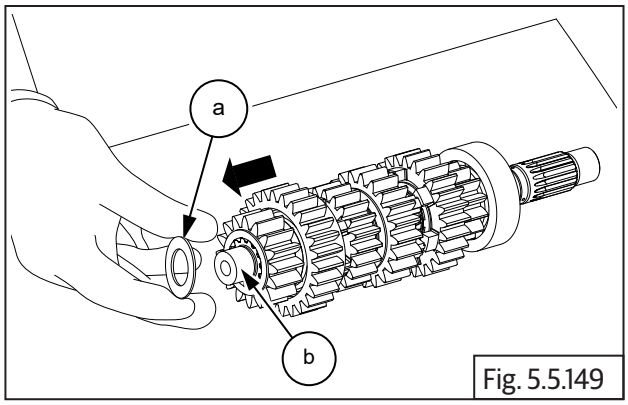

Fig. 5.5.149

- Remove the 2nd gear (16 teeth) **(a)** from the Counter shaft **(b)**.

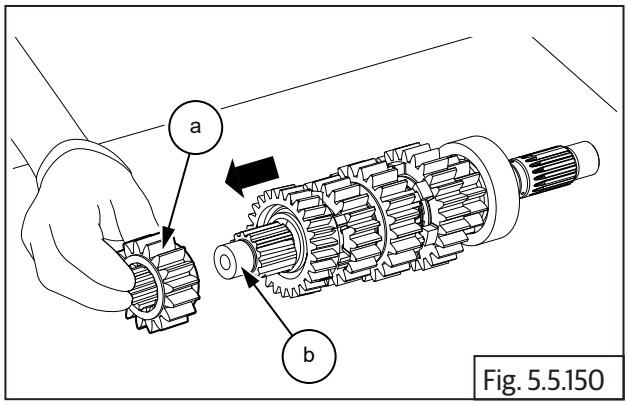

Fig. 5.5.150

- Remove the 6th gear (26 teeth) **(a)** from the Counter shaft **(b)**.

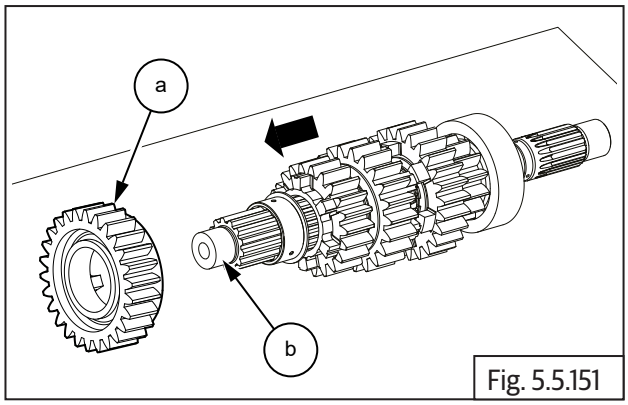

Fig. 5.5.151

- Remove plain bush **(a)** from the Counter shaft **(b)**.

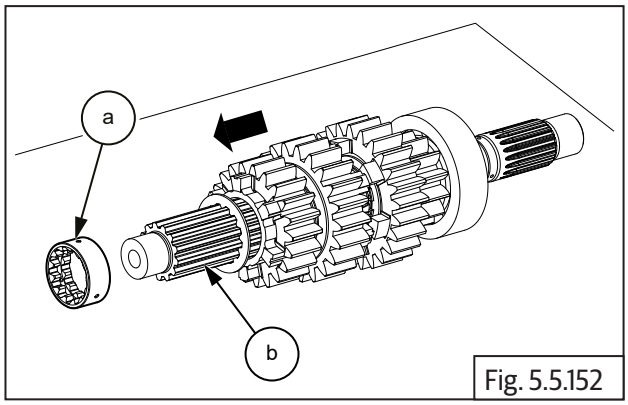

Fig. 5.5.152

- Remove the splined washer **(a)** from the counter shaft **(b)**.

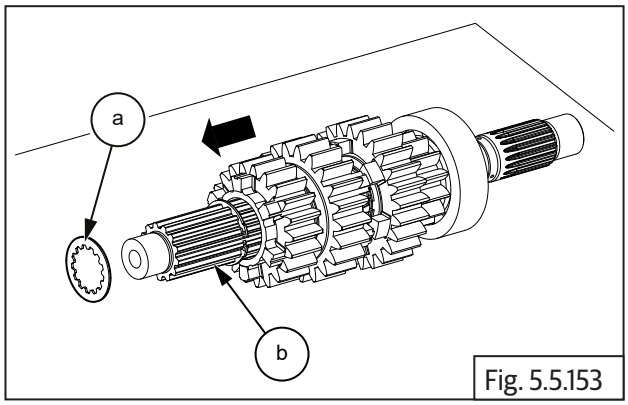

Fig. 5.5.153

- Remove the outer circlip **(a)** from the Counter shaft **(b)**.

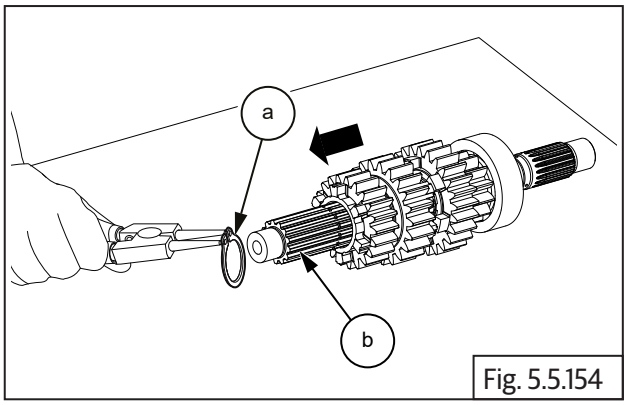

Fig. 5.5.154

	Circlip plier

- Remove the 3rd and 4th double gears **(a)** from the Counter shaft **(b)**.

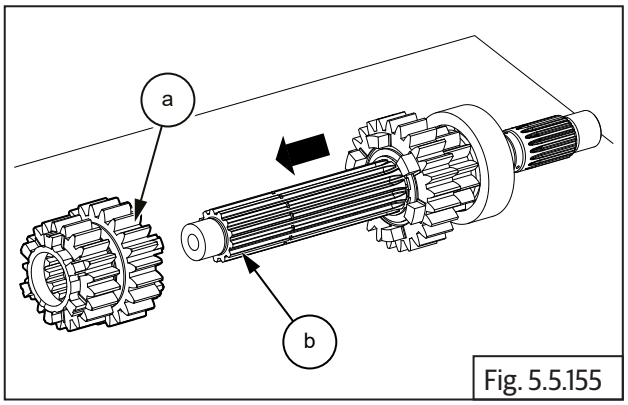

Fig. 5.5.155

- Remove the inner circlip **(a)** from the Counter shaft **(b)**.

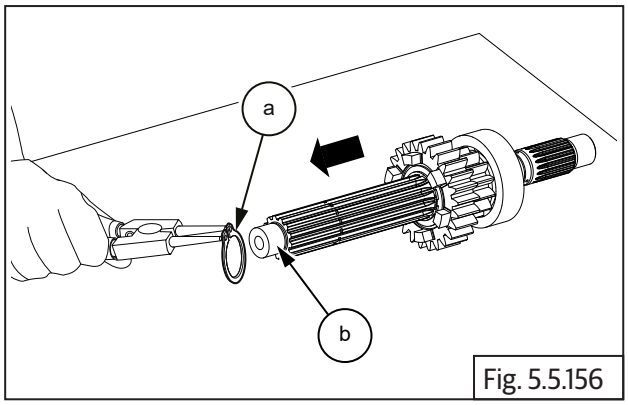

Fig. 5.5.156

	Circlip plier

- Remove the thrust washer **(a)** from Counter shaft **(b).**

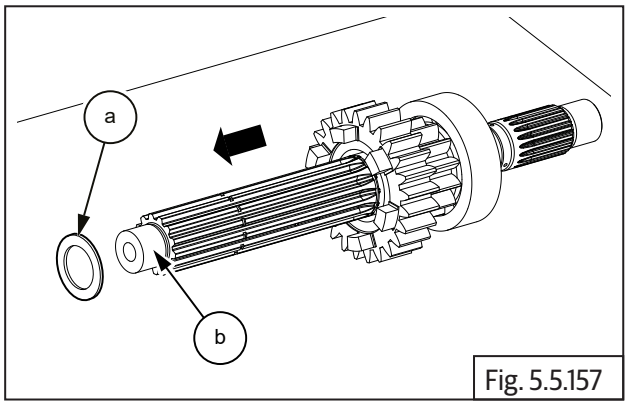

Fig. 5.5.157

- Remove the plain bush **(a)** from the Counter shaft **(b)**.

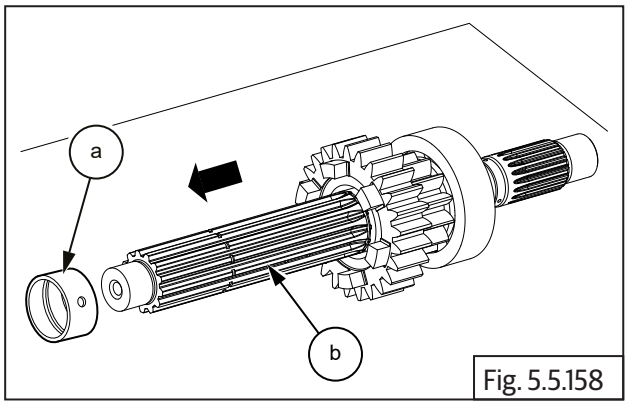

Fig. 5.5.158

- Remove the 5th gear (24 teeth) **(a)** from the Counter shaft **(b)**.

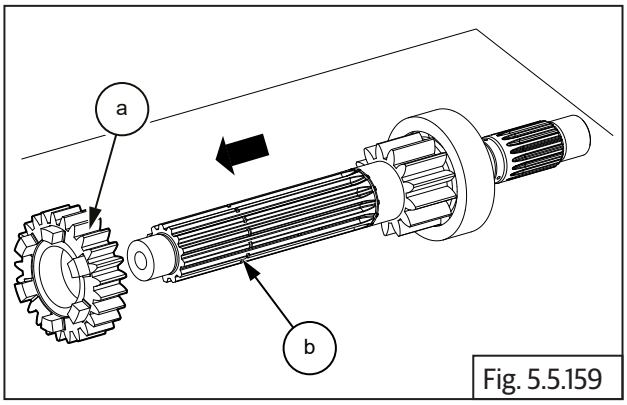

Fig. 5.5.159

5.5.46. Driveshaft

- Gently lift and remove driveshaft with gear assembly **(a)** from upper crankcase **(b)**.

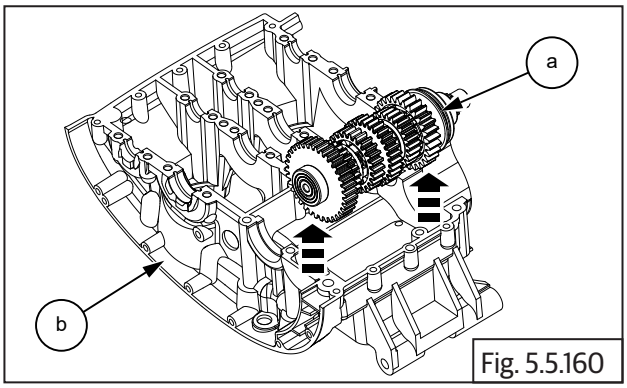

Fig. 5.5.160

- Remove bearing **(a)** from non splined end of driveshaft **(b)**.

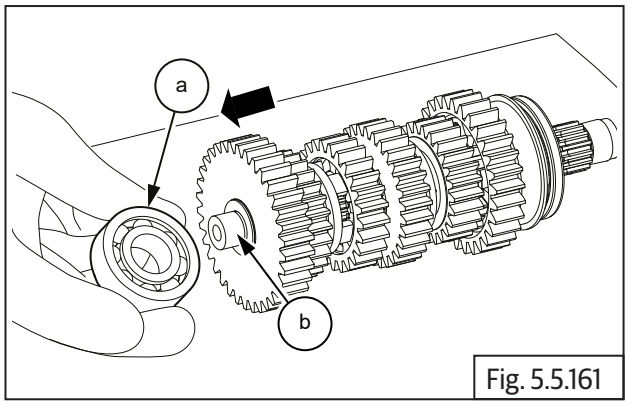

Fig. 5.5.161

- Remove thrust washer **(a)** from non splined end of driveshaft **(b)**.

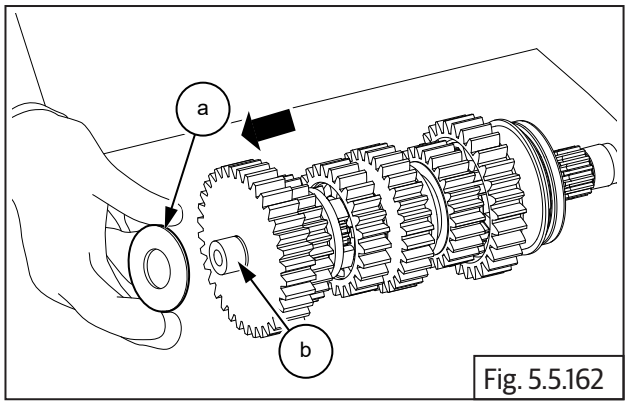

Fig. 5.5.162

- Remove 1st gear **(a)** from non splined end end of driveshaft **(b)**.

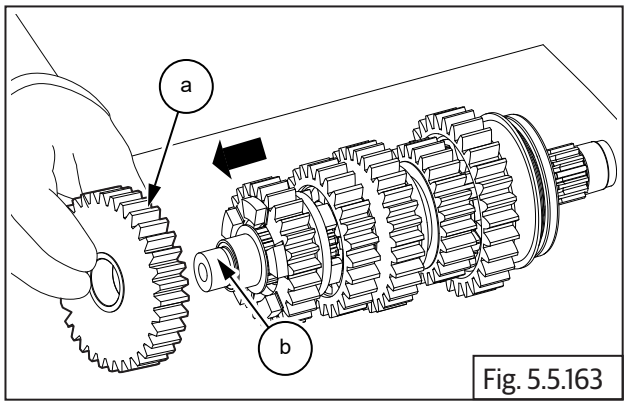

Fig. 5.5.163

- Remove splined bush **(a)** from driveshaft **(b)**.

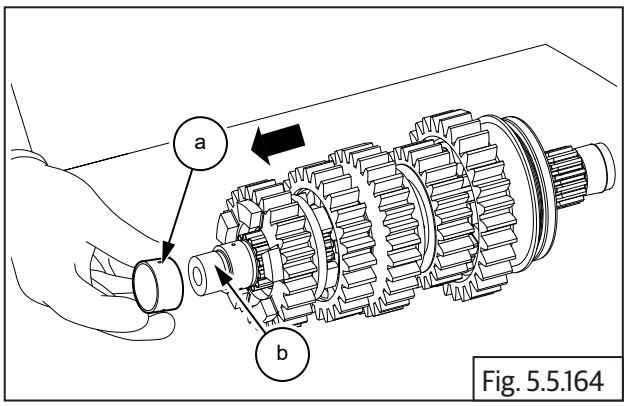

Fig. 5.5.164

- Remove thrust washer **(a)** from driveshaft **(b)**.

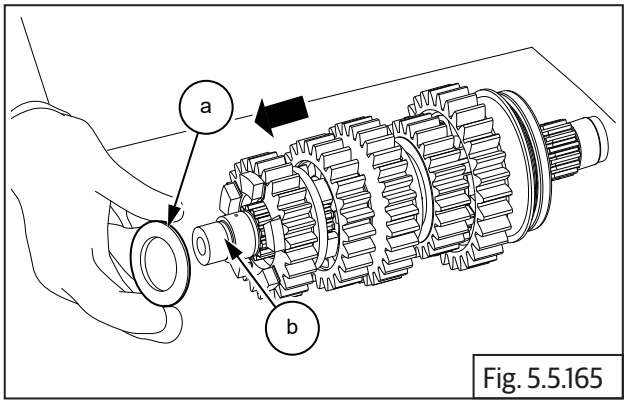

Fig. 5.5.165

- Remove 5th gear **(a)** from the driveshaft **(b)**.

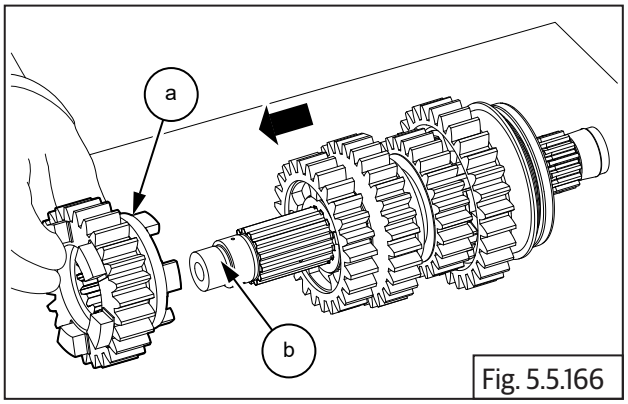

Fig. 5.5.166

- Remove 4th circlip **(a)** from groove in the driveshaft **(b)**.

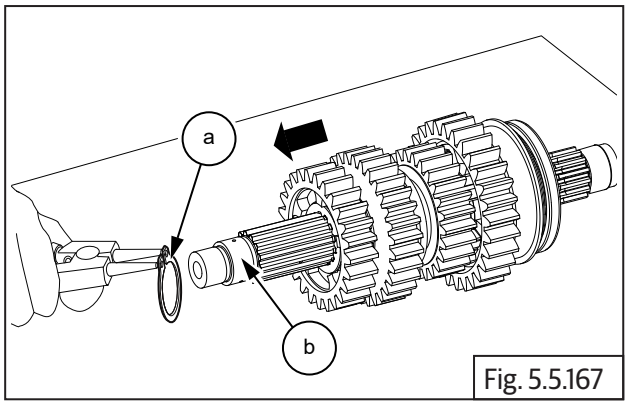

Fig. 5.5.167

	Circlip plier

- Remove splined thrust washer **(a)** from driveshaft **(b)**.

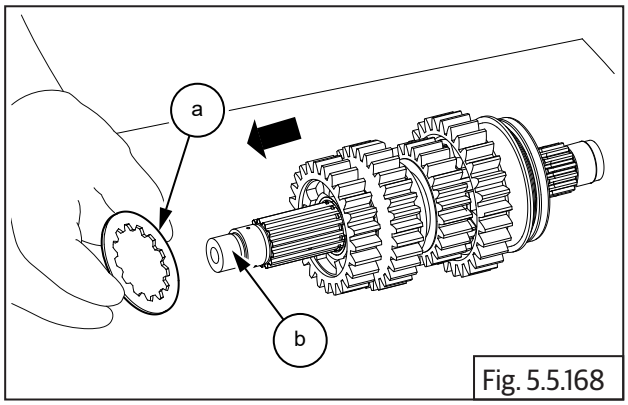

Fig. 5.5.168

- Remove 4th gear **(a)** from driveshaft **(b)**.

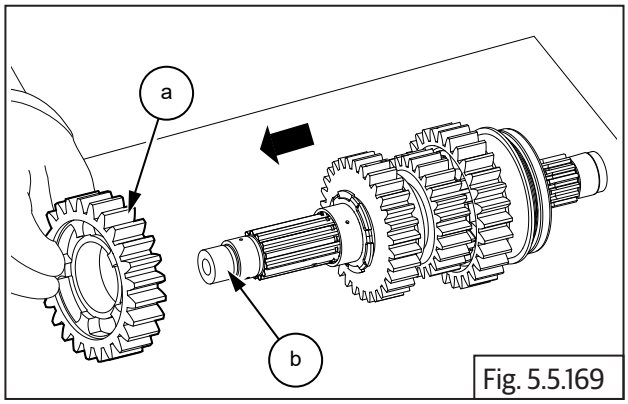

Fig. 5.5.169

- Remove splined bush **(a)** driveshaft **(b)**.

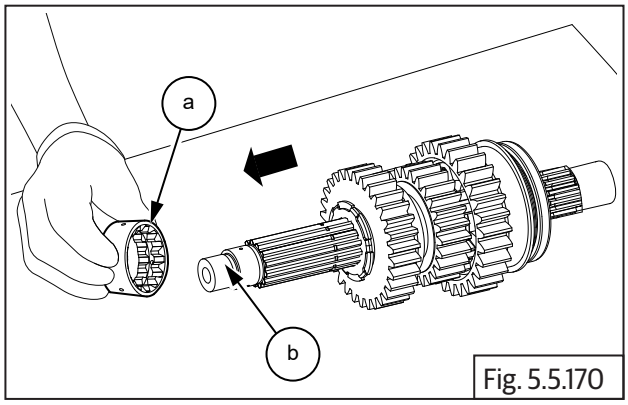

Fig. 5.5.170

- Remove the splined lock washer **(a)** from driveshaft **(b)**.

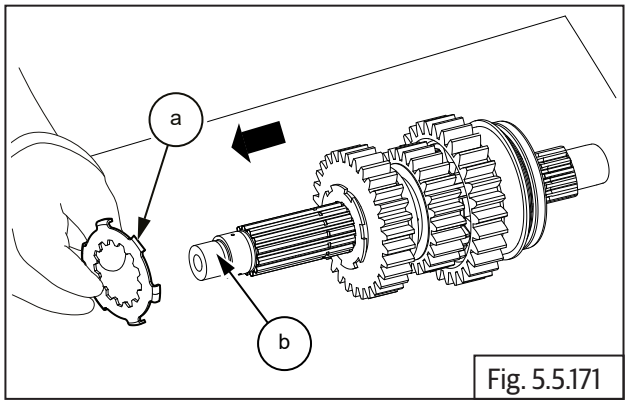

Fig. 5.5.171

- Rotate thrust washer **(a)** such that the inner splines aligned to the splines on the driveshaft and remove from driveshaft **(b)**.

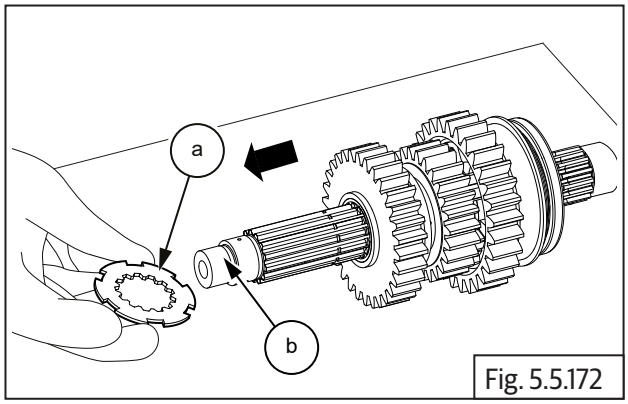

Fig. 5.5.172

- Remove 3rd gear **(a)** from driveshaft **(b)**.

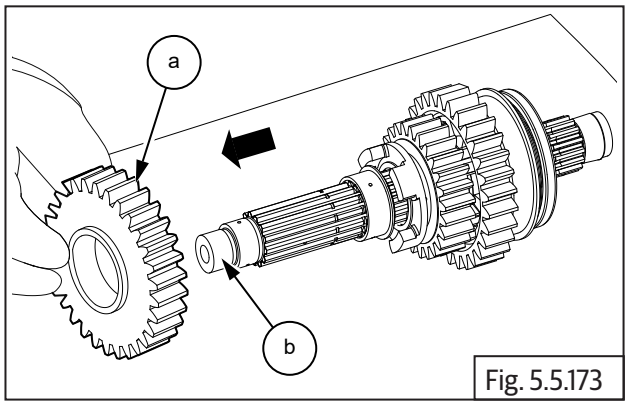

Fig. 5.5.173

- Remove splined bush **(a)** from driveshaft **(b)**.

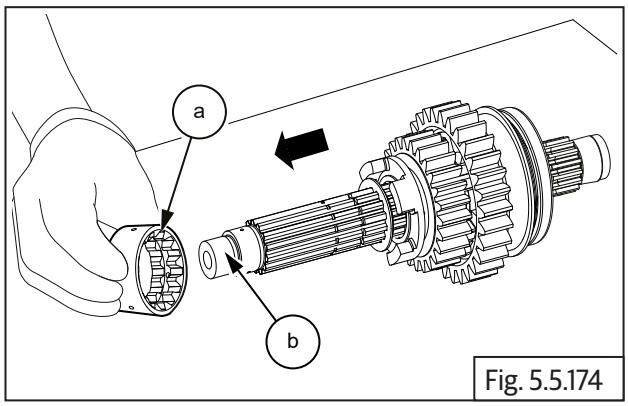

Fig. 5.5.174

- Remove splined thrust washer **(a)** driveshaft **(b)**.

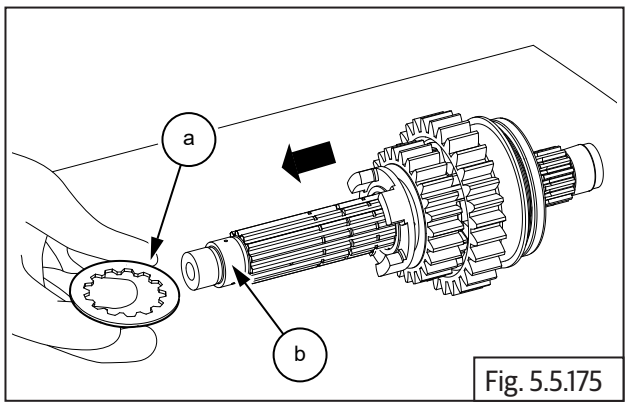

Fig. 5.5.175

- Remove 2nd circlip **(a)** from groove on driveshaft **(b)**.

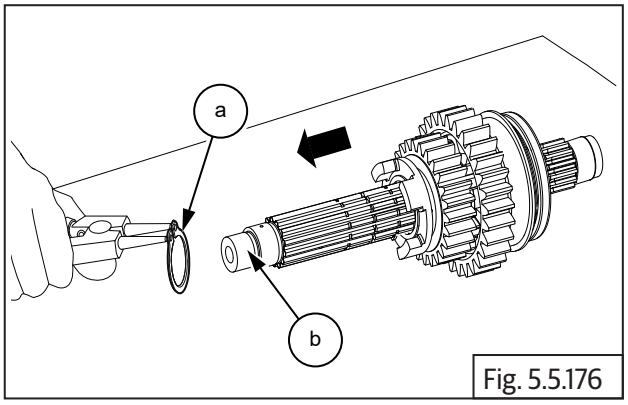

Fig. 5.5.176

	Circlip plier

- Remove 6th gear **(a)** from driveshaft **(b)**.

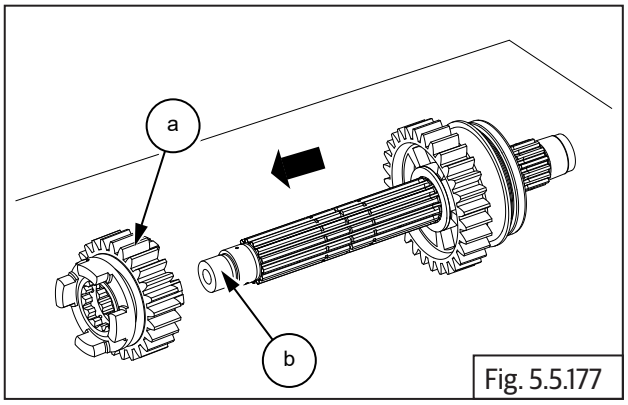

Fig. 5.5.177

- Remove 1st circlip **(a)** from groove on driveshaft **(b)**.

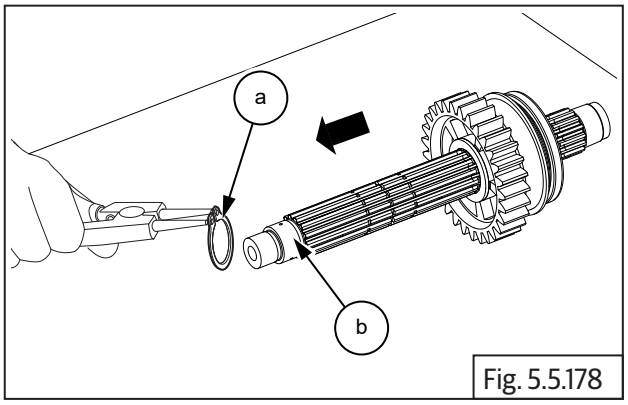

Fig. 5.5.178

	Circlip plier

- Remove collar bush **(a)** from driveshaft **(b)**.

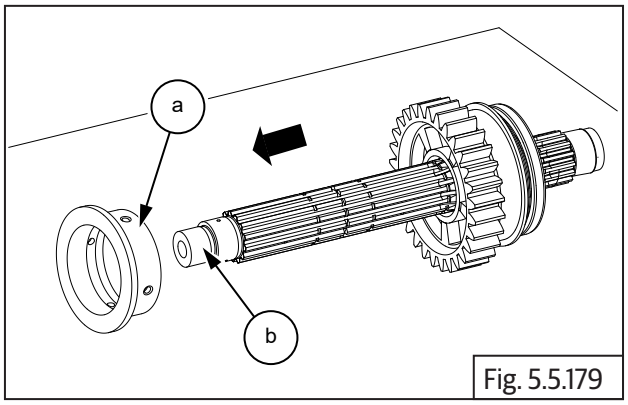

Fig. 5.5.179

- Remove the 2nd gear **(a)** from driveshaft **(b)**.

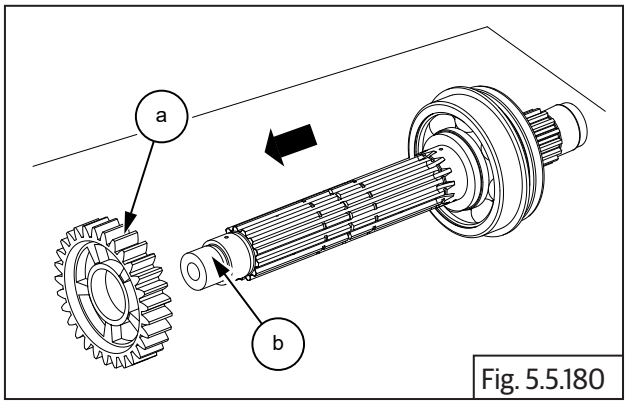

Fig. 5.5.180

- Gently tap and remove the bearing **(a)** from the driveshaft **(b)**.

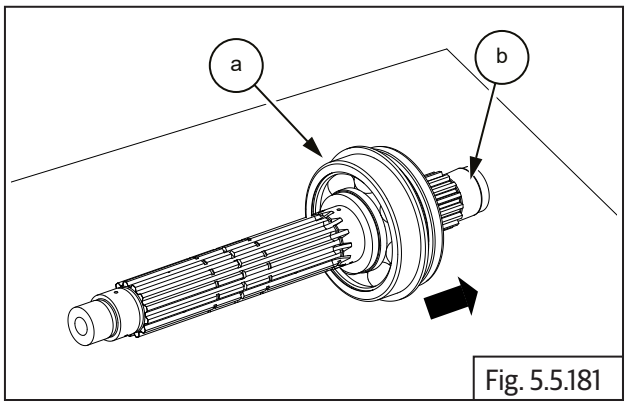

Fig. 5.5.181

5.5.47. Selector Fork and Spindles

- Support inner selector fork **(b)** and pullout spindle **(a)** from the RH side of lower crankcase **(c)**.

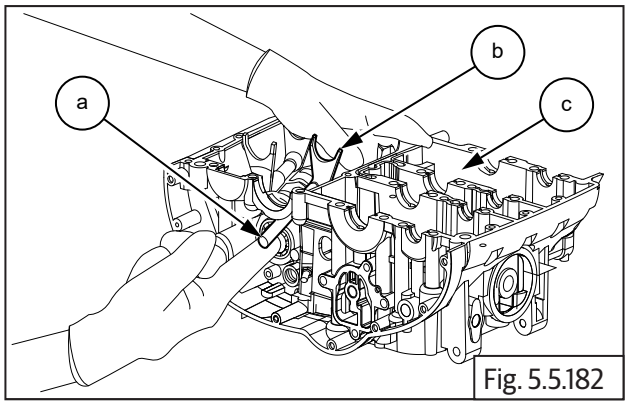

Fig. 5.5.182

- Support the 2 inner selector forks and pull out the spindle **(a)** from the RH side of lower crankcase **(b)**.

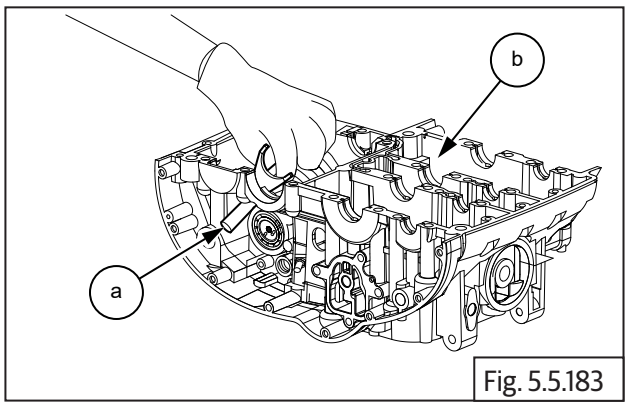

Fig. 5.5.183

5.5.48. Gear Shift Cam Drum

- Gently drive out gear shift cam drum **(a)** from the LH side of lower crankcase.

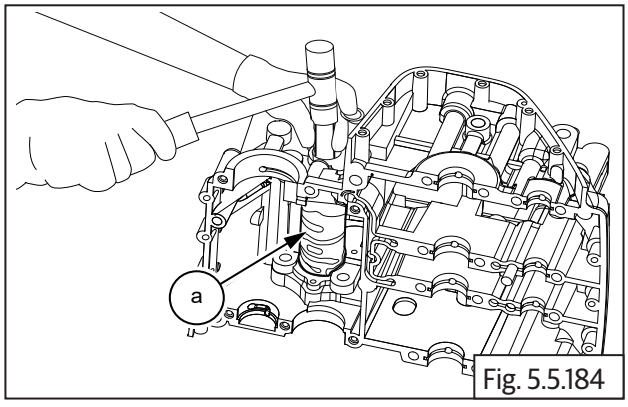

Fig. 5.5.184

	Mallet

ENGINE INSPECTION

CONTENTS PAGE

5.6 Engine Inspection 236

5.6.1 Cylinder Head 236

5.6.2 Cylinder Barrel 240

5.6.3 Crankcase 242

5.6.4 Clutch Components 243

5.6.5 Shifter Forks 244

5.6.6 Selector Drum 244

5.6.7 Magneto Cover 244

5.6.8 Clutch Cover 245

5.6 Engine Inspection

NOTE
• *Remove off carbon deposits by scraping gently.* • *Use soft blunt objects to clean.* • *Wash components with recommended solvents.* • *Ensure area is clean and dry before inspection.*

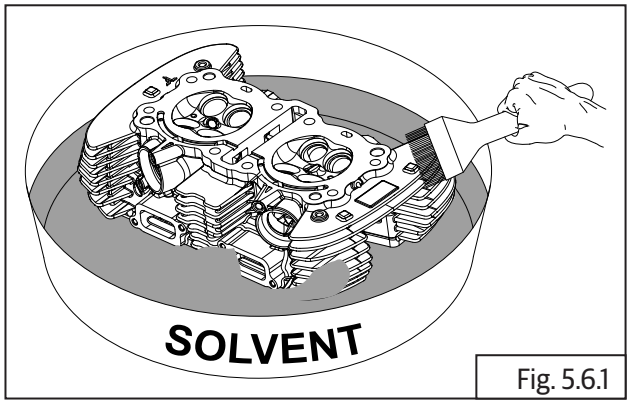

Fig. 5.6.1

5.6.1 Cylinder Head

Cylinder Head Inspection

- Inspect cylinder head carefully for any cracks, blow holes or damages – especially in the inlet and exhaust ports.
- Place thick straight edge across cylinder head gasket seating surface.
- Insert pointed feeler gauge of 0.01 mm thickness between straight edge and cylinder head.
- Inspect and ensure 4 locations **(a, b, c, d)** on cylinder head are at same level.

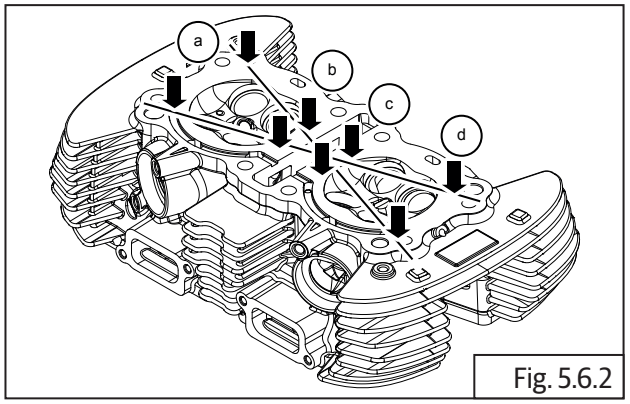

Fig. 5.6.2

- Ensure feeler enters properly at marked places.

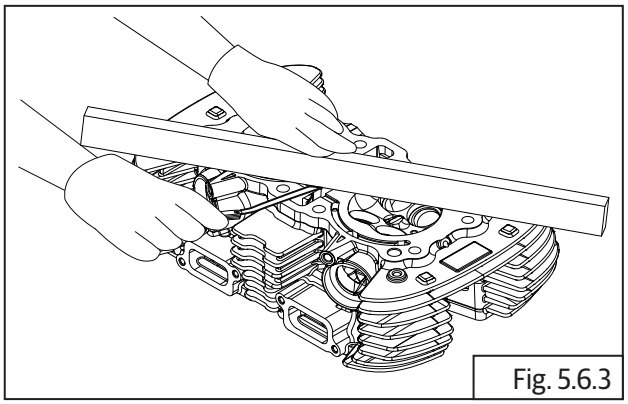
Fig. 5.6.3

	Thick straight edge and Feeler gauge

Service limit:	0.01 mm

Rocker Cover to Cylinder Head Seating Surface

- Place the thick straight edge across the rocker cover gasket seating surface.
- Insert pointed feeler gauge of 0.01 mm thickness between straight edge and cylinder head at the marked places.

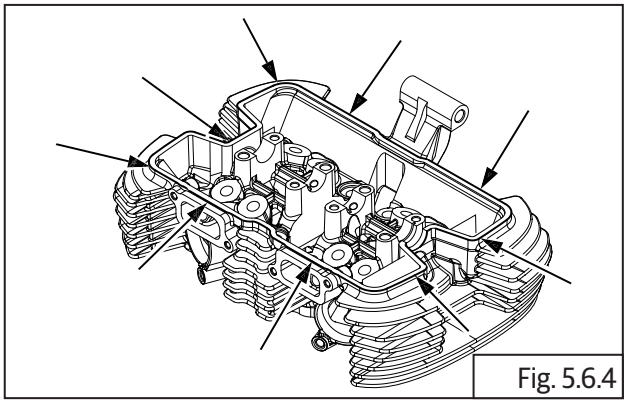
Fig. 5.6.4

- Ensure feeler enters properly at marked places.

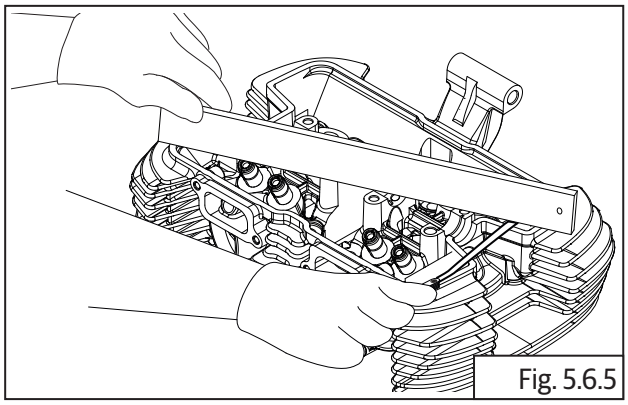

Fig. 5.6.5

	Thick straight edge and Feeler gauge

Service limit:	0.01 mm

Rocker Cover

- Place thick straight edge across the rocker cover.
- Insert pointed feeler gauge of 0.01 mm thickness between straight edge and rocker cover.
- Inspect and ensure 4 locations **(a, b, c, d)** on rocker cover are at same level.

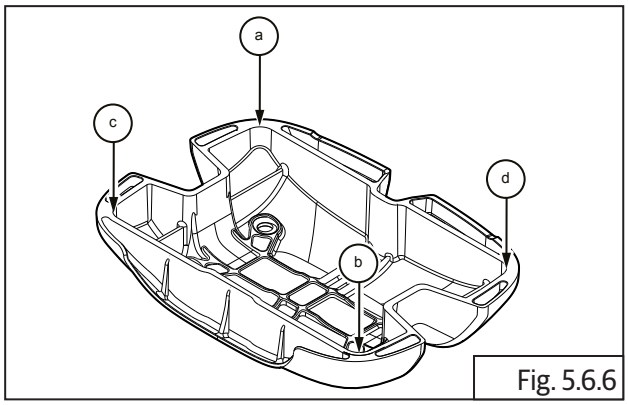

Fig. 5.6.6

	Thick straight edge and Feeler gauge

Service limit:	0.01 mm

Rocker Arm

- Inspect rollers **(a)** for any wear and/or sticky rotation. Replace if defective.
- Measure the inner diameter **(b)** of the rocker arm.

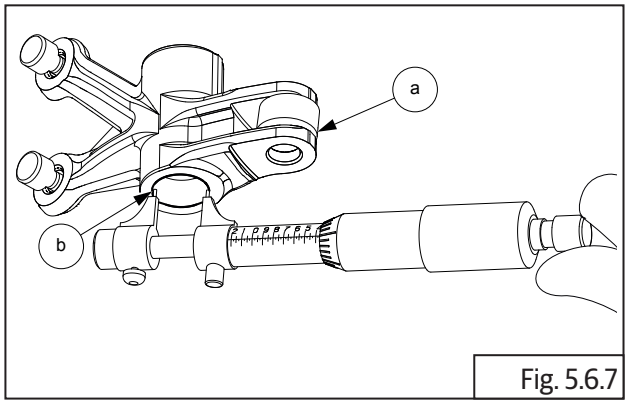

Fig. 5.6.7

	Inside micrometer

Service Limit:	12.05 mm

Rocker Arm Shaft

- Check rocker arm shaft for pitting, score marks, uneven wear or damage. Replace if defective.
- Measure the diameter of the rocker shaft **(a)** at the rocker arm working area.

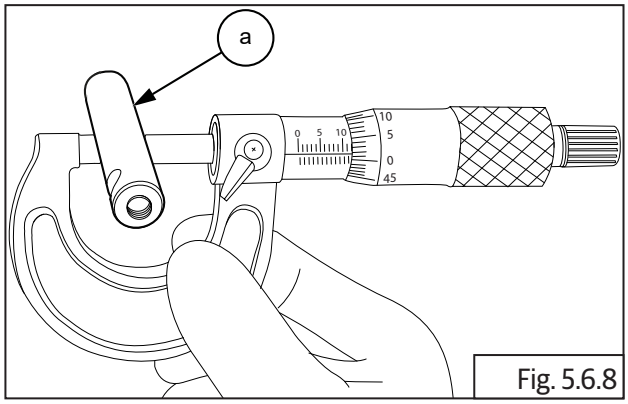

Fig. 5.6.8

	Micrometer

Service Limit:	11.947 mm

Tappet Adjusters

- Inspect "elephant foot" **(a)** for any wear and/or sticky rotation. Replace if defective.

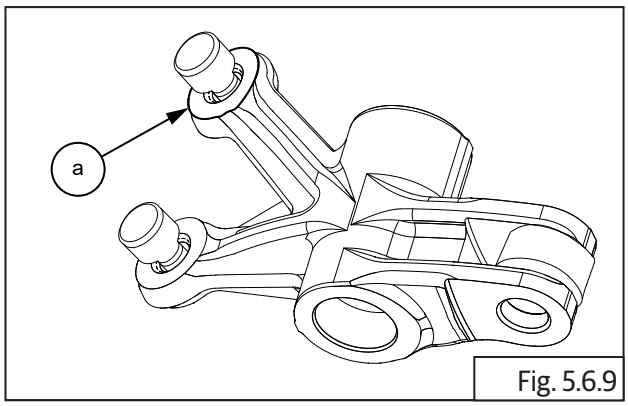

Fig. 5.6.9

Camshaft Run-out

- Inspect camshaft lobes for pitting, score marks, uneven wear or damage.
- Support the cam shaft on the 2 V-blocks **(a)**.
- Rotate the camshaft slowly and measure run-out with a dial gauge **(b)** at the machined place.

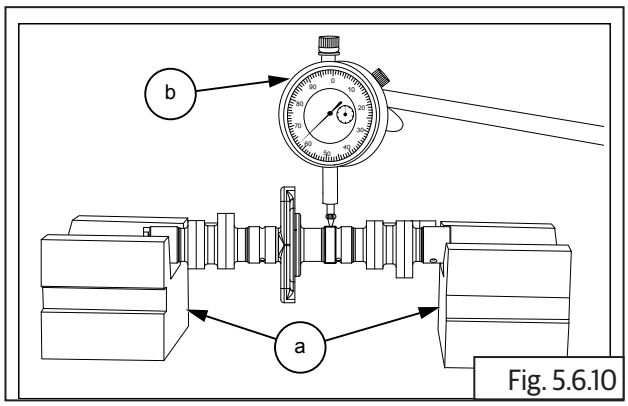

Fig. 5.6.10

	V-Blocks and Dial gauge

Service limit:	0.05 mm

Camshaft Journal OD

- Measure camshaft journal OD **(a)**.

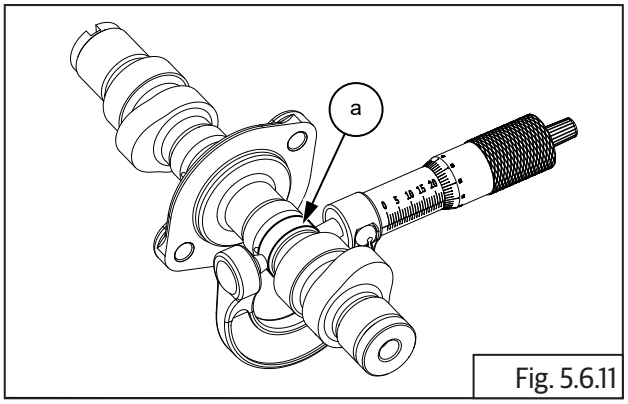

Fig. 5.6.11

	Micrometer

Service Limit:	21.930 mm

Camshaft Lobe

- Inspect cam lobes for scoring, wear-out and scratches.
- Measure height of each cam lobe **(a)**.

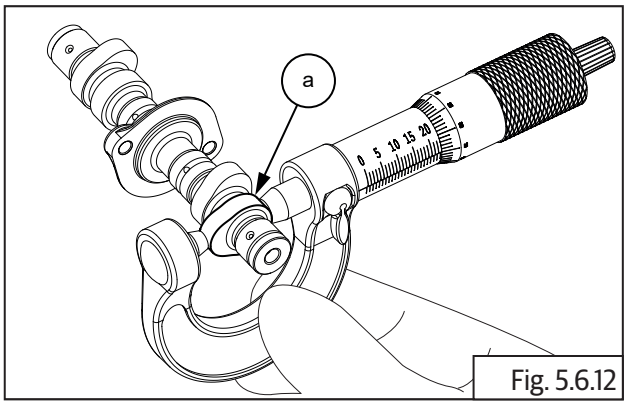

Fig. 5.6.12

	Micrometer

Service limit (Intake):	35.49 mm
Service limit (Exhaust):	35.50 mm

Valve Inspection.

- Check each valve for wear, burn or distortion at its face and stem end. Replace valve, if necessary.
- Check valve stem end face for pitting and wear.
- When it is worn out, replace the valve.

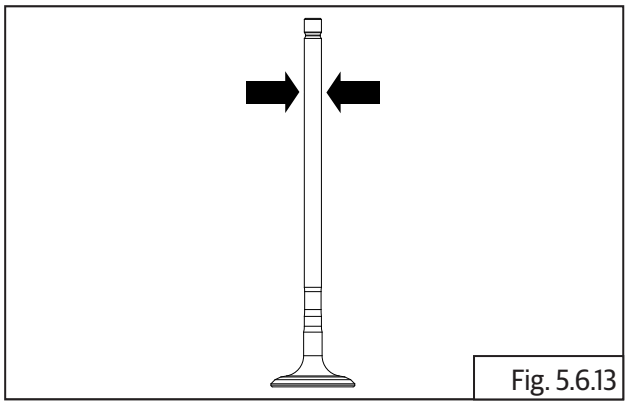

Fig. 5.6.13

Valve Guide ID (Inlet and Exhaust)

- Using micrometer and bore gauge, measure the ID of the valve guides at the top and bottom working area inside the guides.

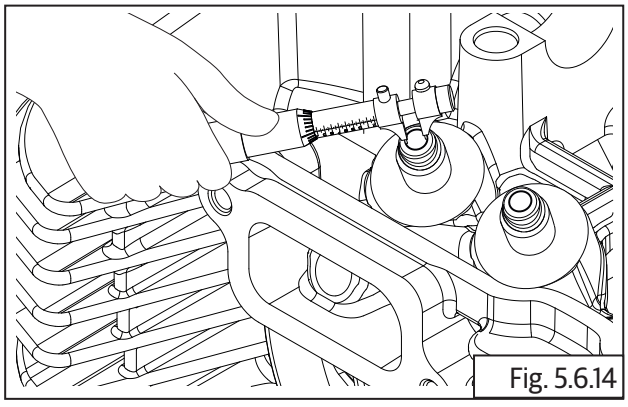

Fig. 5.6.14

	Micrometer and Bore gauge

Service Limit Intake	5.065 mm
Service Limit Exhaust:	5.100 mm

Valve Spring (Inlet and Exhaust)

- Measure load on installed and working condition.

Installed Load	
Minimum:	154.100 N-m
Maximum:	174.100 N-m

Working Load	
Minimum:	431.300 N-m
Maximum:	461.300 N-m

Valve Stem OD (Inlet and Exhaust Valve)

- Measure diameter at marked places along the length of each stem.

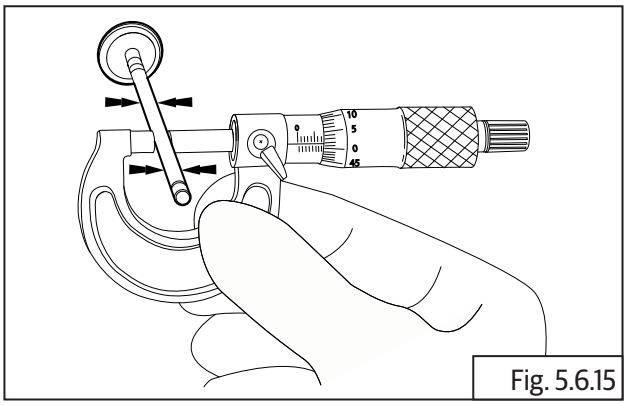

Fig. 5.6.15

	Micrometer

Inlet Valve Stem	
Measuring Point	**Service Limit**
Stem OD Top	4.960 mm
Stem OD middle	4.960 mm
Stem OD bottom	4.960 mm
Bend	0.010 mm

Exhaust Valve Stem	
Measuring Point	**Service Limit**
Stem OD Top	4.940 mm
Stem OD middle	4.940 mm
Stem OD bottom	4.940 mm
Bend	0.010 mm

5.6.2 Cylinder Barrel

Cylinder Barrel Bore ID

- Check cylinder bore to piston working area for scoring, seizure marks and/or excessive wear.
- Measure the cylinder bore at the top, middle and bottom at the rings working area using a bore gauge.
- Measure at both across and along the gudgeon pin axis.

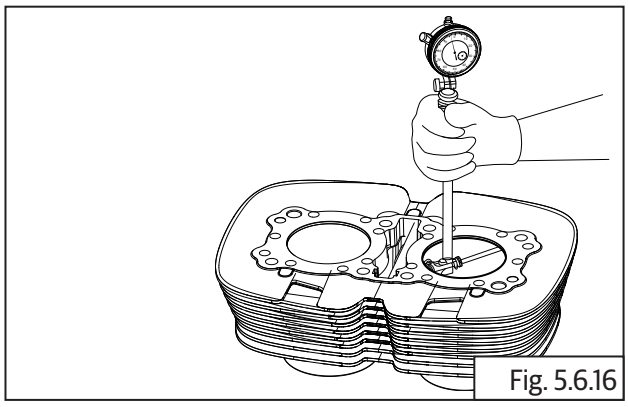

Fig. 5.6.16

	Bore gauge

Measuring points	Service Limit
(ID) Top of Piston working area	0.030 mm
(Ovality) Top of Piston working area	0.003 mm
(ID) Middle of Piston working area	0.030 mm
(Ovality) Middle of Piston working area	0.003 mm
(ID) Bottom of Piston working area	0.030 mm
(Ovality) Bottom of Piston working area	0.003 mm

Bore Taper Limit

- Measure the cylinder taper at three levels: Top **(a)**, Middle **(b)**, and Bottom **(c)** in the X and Y axis.

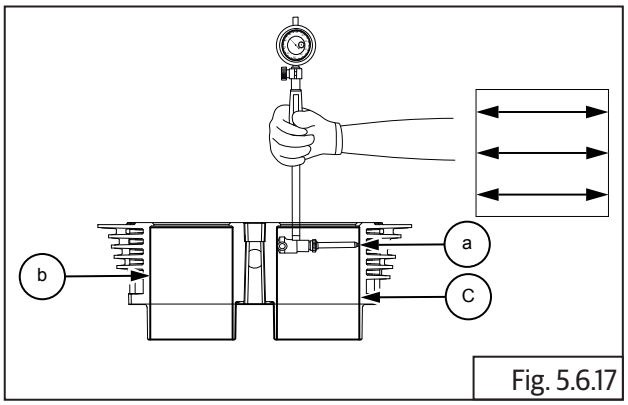

Fig. 5.6.17

	Bore gauge

Service Limit	78.100

Piston OD

- Measure and record both LH and RH cylinder piston OD at three levels - Top, Middle, and Bottom using Micrometer.

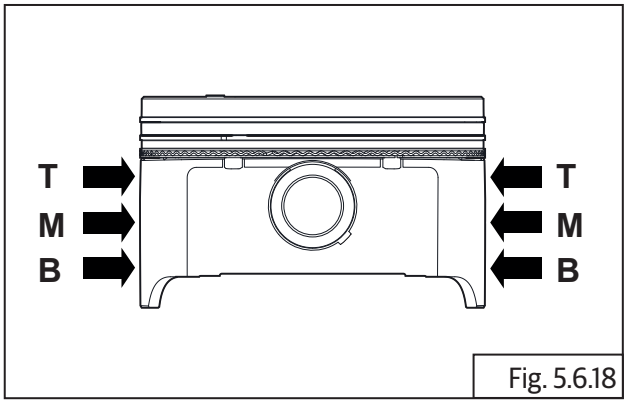

Fig. 5.6.18

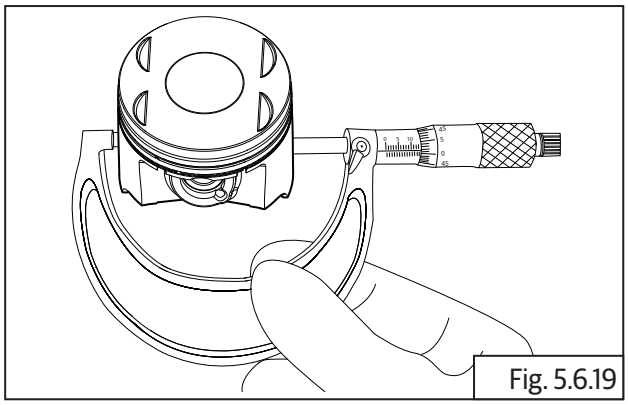
Fig. 5.6.19

	Micrometer

Service Limit	77.870 mm

Piston Pin Bore ID

- Measure both LH and RH cylinder piston pin bore **(a)** inner diameter using inside micrometer **(b)**.

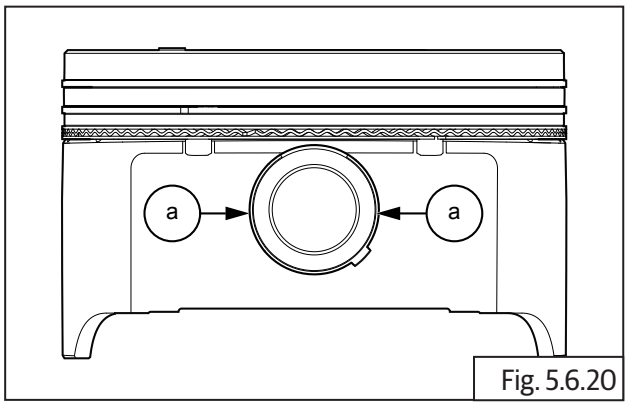

Fig. 5.6.20

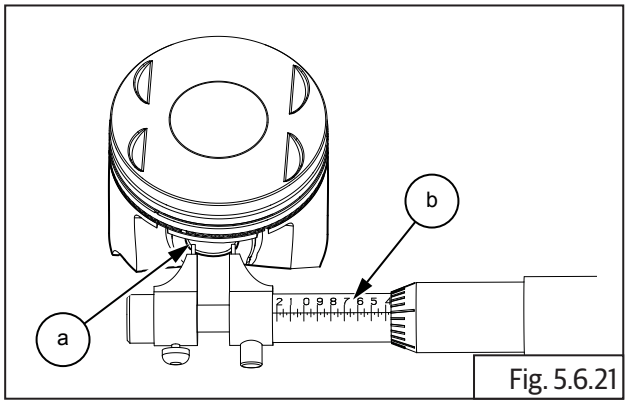

Fig. 5.6.21

	Inside micrometer

Service Limit	20.020 mm

Piston Pin

- Measure the diameter of the piston pin **(a)**.

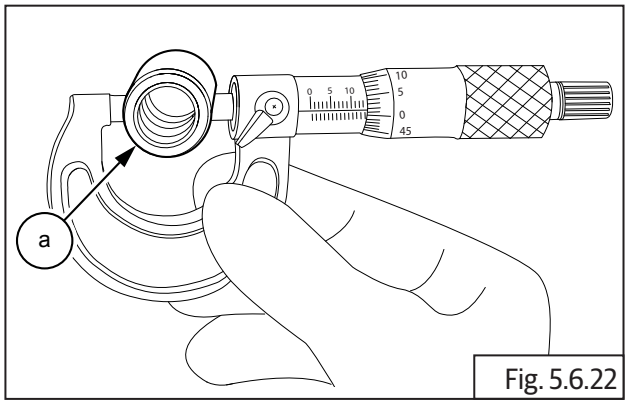

Fig. 5.6.22

	Micrometer

Service Limit	19.977 mm

Piston Ring End Gap

- Position the piston rings at their respective locations at the top of the cylinder barrel and ensure they are seated "squarely" inside the cylinder barrel.

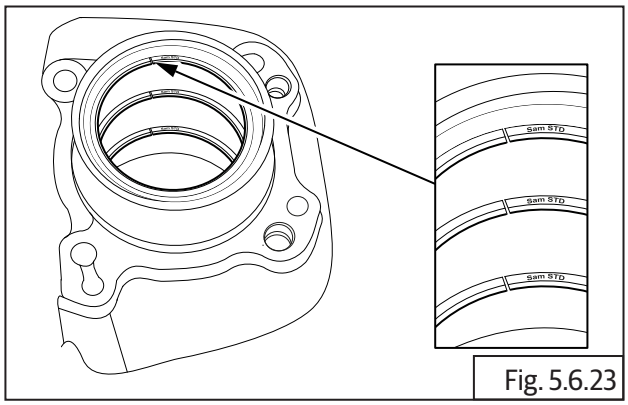

Fig. 5.6.23

- Measure piston rings end gap **(a)** using feeler gauge **(b)**.

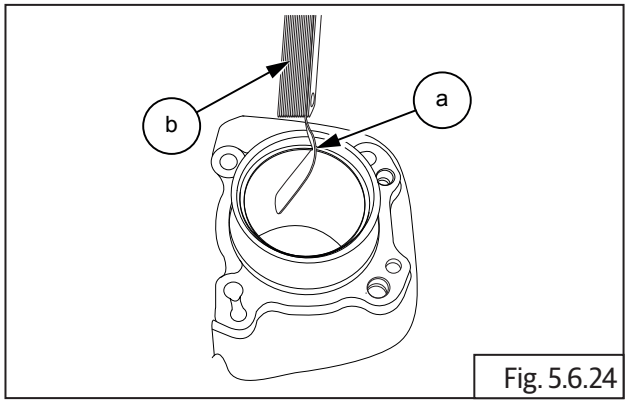

Fig. 5.6.24

	Feeler gauge

Measuring Points	Service Limit
Piston ring top 1	0.06mm
Piston ring top 2	0.07 mm

5.6.3 Crankcase

Connecting Rod Small End ID

- Measure the connecting rod small end inner diameter **(a)**.

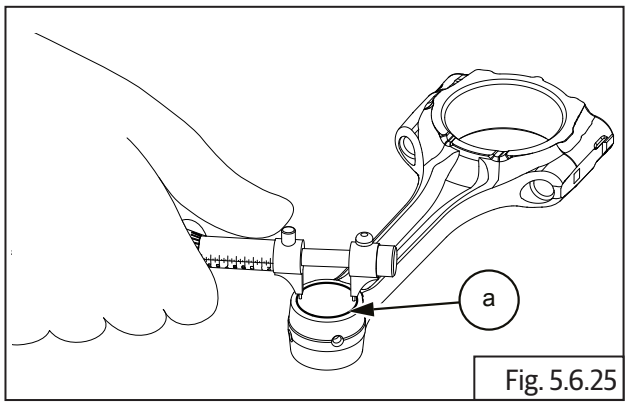

Fig. 5.6.25

	Inside Micrometer

Service Limit	20.05 mm

Balancer Shaft Run-out

- Place the balancer shaft in V-blocks.
- Rotate the balancer shaft and measure run-out with a dial gauge at the machined surface **(a)** and **(b)**.

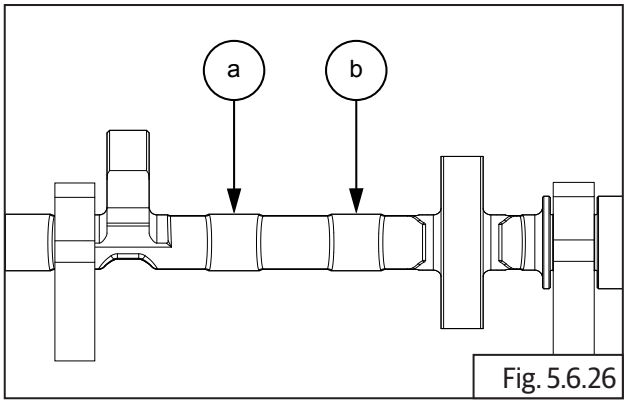

Fig. 5.6.26

	V-Blocks and Dial gauge.

Service limit:	0.035 mm

Balancer Shaft Face Out

- Place the balancer shaft in V-blocks.
- Rotate the balancer shaft and measure the web face out with a dial gauge at the specified place **(a)** and **(b)**.

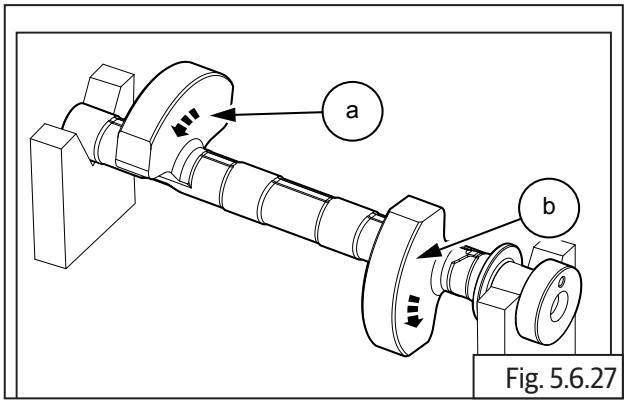

Fig. 5.6.27

	V-Blocks and Dial gauge.

Service limit:	0.040 mm

5.6.4 Clutch Components

Friction plate

- Inspect the clutch plates visually for uneven wear, seizure and discoloration.
- Measure the thickness of the friction plate **(a)** at 4 locations marked by arrows.

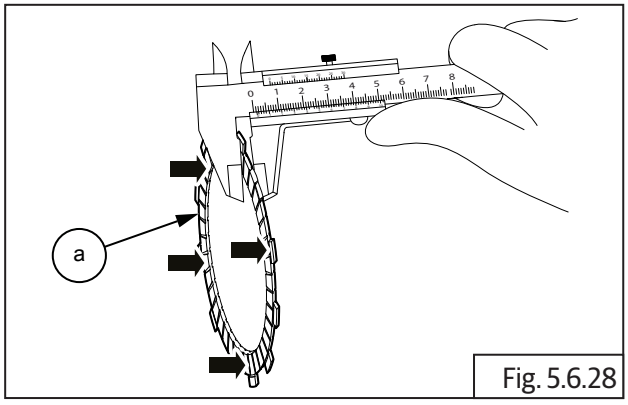

Fig. 5.6.28

	Vernier caliper

Service Limit:	0.100 mm

Steel Plate

- Measure the thickness of the steel plates **(a)** at different locations.

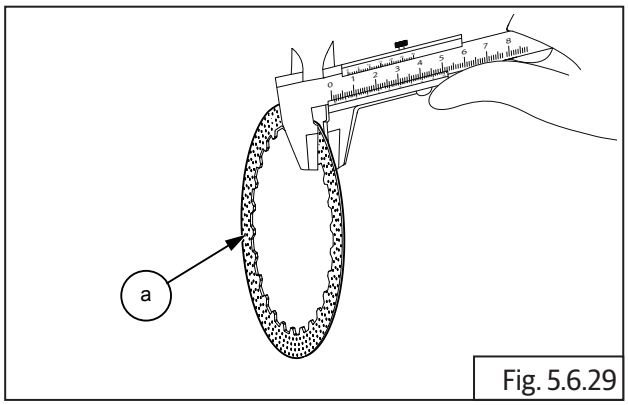

Fig. 5.6.29

	Vernier caliper

Minimum:	1.550 mm
New Maximum:	1.650 mm
Service Limit:	0.100 mm

Clutch Hub (Outer and Inner)

- Inspect the clutch hub **(a)** for any scratches, wear or damage of the lugs.

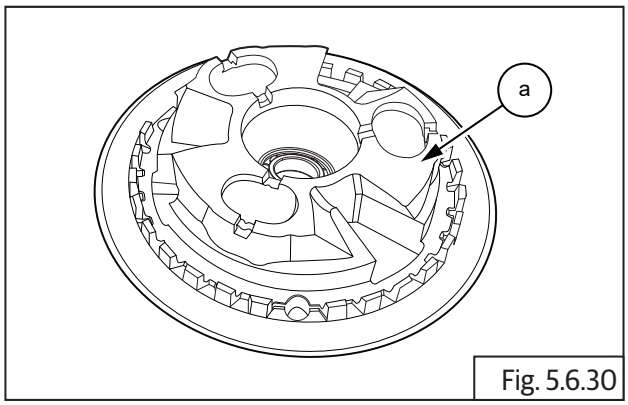

Fig. 5.6.30

- Visually inspect clutch center **(a)** for any scratches, wear or damage.

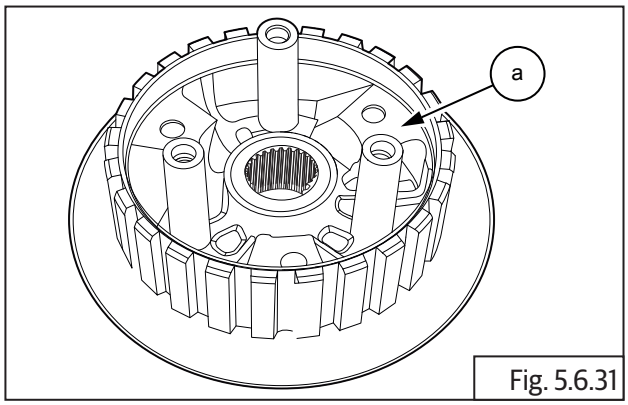

Fig. 5.6.31

Clutch Housing

- Visually inspect clutch housing and lugs for any, wear, bends, lug breakage, heat marks or damages.

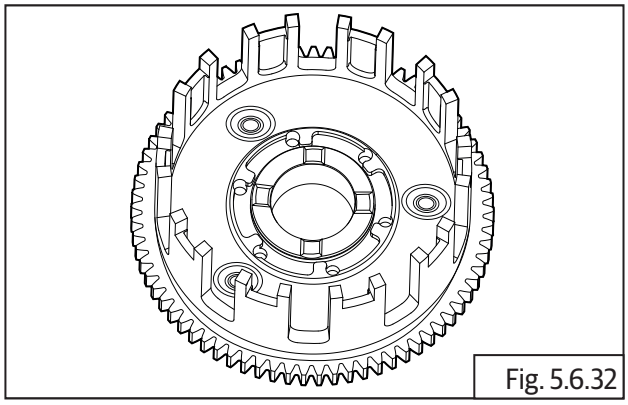

Fig. 5.6.32

5.6.5 Shifter Forks

- Measure the pegs on shifter forks **(a)** using micrometer for wear.

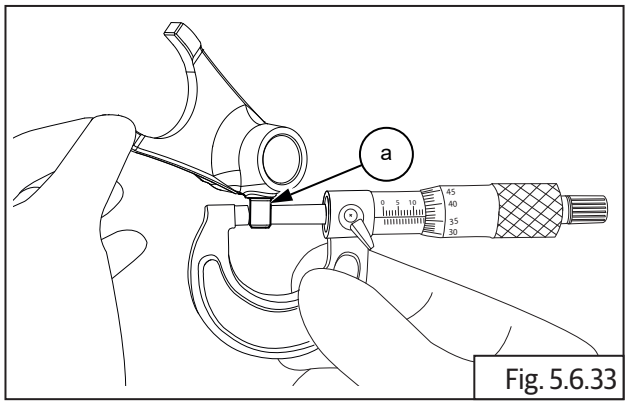

Fig. 5.6.33

	Micrometer

Service Limit:	0.100 mm

- Visually inspect the shifter fork machined lugs **(a)** for damage, excessive wear out scoring and replace if damaged.

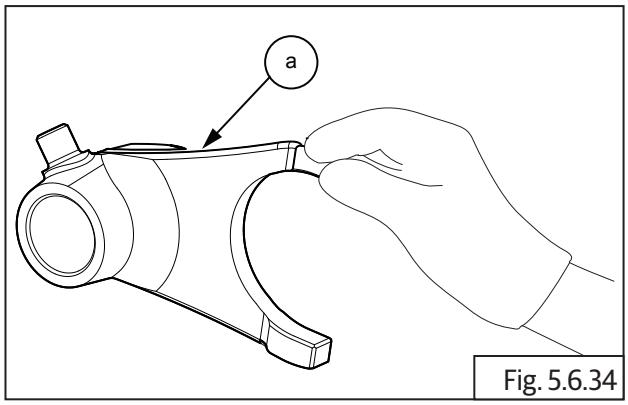

Fig. 5.6.34

5.6.6 Selector Drum

- Inspect the shifter fork working grooves in the selector drum for any damages, chipped ends etc. Measure the grooves in their working area for excessive wear out.

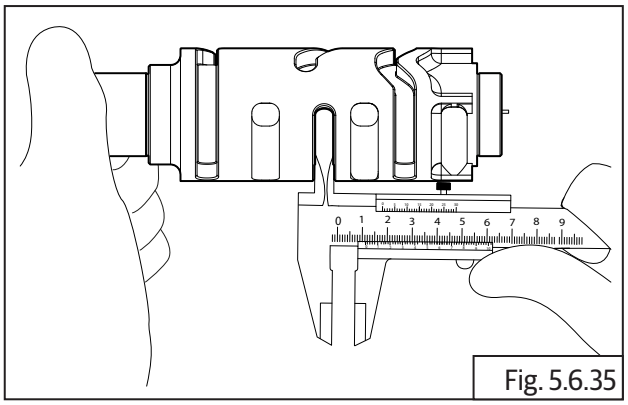
Fig. 5.6.35

	Vernier caliper

Service Limit:	0.150 mm

5.6.7 Magneto Cover

- Visually inspect the magneto cover for any outer damages, cracks etc.
- Inspect the cover seating area for any damages pitting etc.
- Place the magneto cover **(a)** on a surface plate and measure for any surface warpage using feeler strip **(b)** of 0.01 mm.
- Replace cover if warpage is beyond service limit.

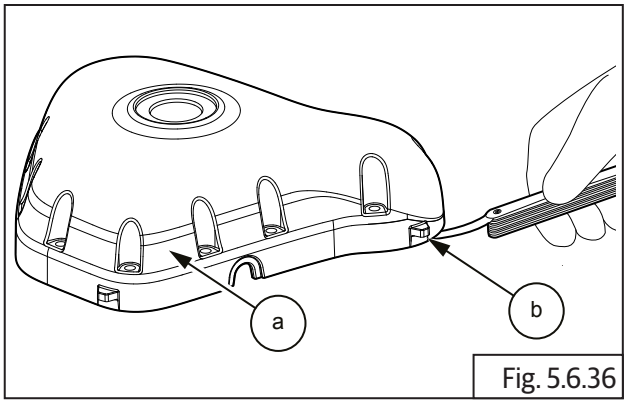

Fig. 5.6.36

	Feeler gauge and Surface plate

Service limit:	0.01 mm

5.6.8 Clutch Cover

- Visually inspect the clutch cover for any outer damages, cracks etc.
- Inspect the cover seating area for any damages pitting etc.
- Place the clutch cover **(a)** on a surface plate and measure for any surface warpage using feeler strip **(b)** of 0.01 mm.
- Replace cover if warpage is beyond service limit.

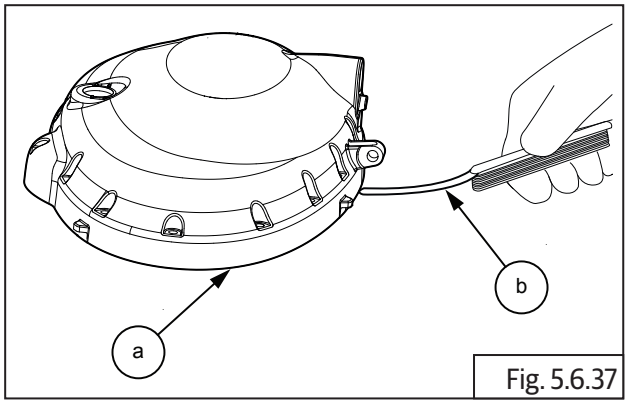

Fig. 5.6.37

	Feeler gauge and Surface plate

Service limit:	0.01 mm

JOURNAL BEARINGS SELECTION

CONTENTS PAGE

5.7 Journal Bearings Selection Chart..... 248

Bearings Selection Procedure..... 248

5.7.1. Crankshaft Journal Bearings 248

5.7.2. Balancer Shaft Journal Bearings..... 250

5.7.3. Connecting rod journal bearings 252

5.7 Journal Bearings Selection Chart

Bearings Selection Procedure

5.7.1. Crankshaft Journal Bearings

Crankshaft journal bearings selection chart (1.1)

Crankcase	Crankshaft	Bearing code	Bearing color
A	A	CODE-1	Green
A	B	CODE-2	Black
A	C	CODE-3	Brown
B	A	CODE-2	Black
B	B	CODE-3	Brown
B	C	CODE-4	Yellow

NOTE
• *Crankshaft punch mark will be with alphabets A, B, C punch mark only.*
• *Crankcase punch mark will be with alphabets A, B punch mark only.*

Example :

The below sample illustration is only for explanation for selecting crank-shaft journal bearing. This can be found in the lower crank case.



NOTE
• ***BAL*** *referes to Balancer Shaft,* ***CRA*** *refers to Crank Shaft*

The alphabets punched on the upper crankcase should be correlated with the alphabets punched on the crankshaft web to arrive at the journal wise bearing selection of AA, AB, AC OR BA, BB, BC.

Based on the journal wise markings combination, the corresponding bearing kit (consisting of 2 journal bearings) code/colour should be selected by referring to the chart below as Code - 1, Code - 2, Code - 3, Code - 4.

Crankcase	Crankshaft	Bearing code	Bearing color
A	A	CODE-1	Green
A	B	CODE-2	Black
A	C	CODE-3	Brown
B	A	CODE-2	Black
B	B	CODE-3	Brown
B	C	CODE-4	Yellow

Hence, crankshaft journal bearing selection would be in the following order:

- Journal Bearing 1: Matching: AB, Bearing Code - 2 , Colour: Black
- Journal Bearing 2: Matching: AA, Bearing Code - 1 , Colour: Green
- Journal Bearing 3: Matching: BA, Bearing Code - 2 , Colour: Brown
- Journal Bearing 4: Matching: AA, Bearing Code - 1 , Colour: Green

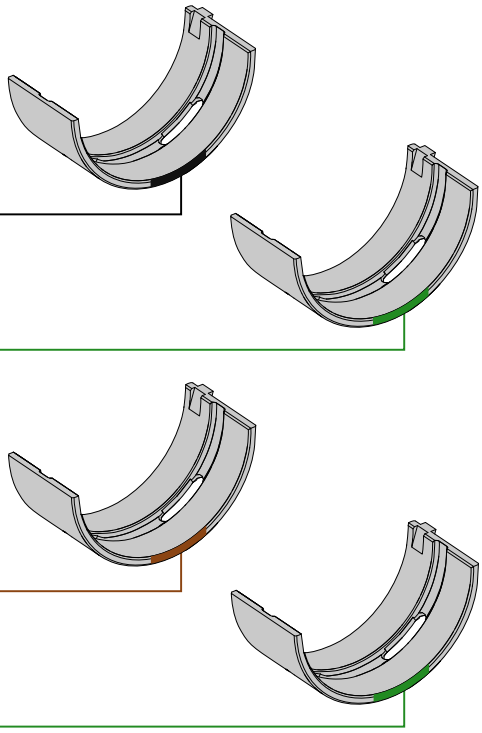

CAUTION

Ensure the journal bearing seating areas in the upper and lower crankcases are clean and dry.

Ensure the bearings are correctly positioned and aligned before they are fixed into the crankcases.

Do not interchange the journal bearings, they should be installed in their correct sequential order only.

Do not use any tools while installing bearings as it ma y damage the bearings.

Do not reuse journal bearings once they are removed from the crankcases.

5.7.2. Balancer Shaft Journal Bearings

Balancer shaft journal bearing selection chart (1.2)

Crankcase	Balancer Shaft	Bearing code	Bearing color
A	A	CODE-1	Green
A	B	CODE-2	Black
A	C	CODE-3	Brown
B	A	CODE-2	Black
B	B	CODE-3	Brown
B	C	CODE-4	Yellow

NOTE
• *Balancer shaft punch mark will be with alphabets A, B, C punch mark only.*
• *Crankcase punch mark will be with alphabets A, B punch mark only.*

Example:

The below sample illustration is only for explanation for selecting balancer-shaft journal bearing. This can be found in the lower crank case.



NOTE
• ***BAL*** *referes to Balancer Shaft,* ***CRA*** *refers to Crank Shaft*

The alphabets punched on the upper crankcase should be correlated with the alphabets punched on the balancer shaft web to arrive at the journal wise bearing selection of AA, AB, AC or BA, BB, BC.

Based on the journal wise markings combination, the corresponding bearing kit (consisting of 2 journal bearings) code/colour should be selected by referring to the chart below as Code - 1, Code - 2, Code - 3, Code - 4.

Crankcase	Balancer Shaft	Bearing code	Bearing color
A	A	CODE-1	Green
A	B	CODE-2	Black
A	C	CODE-3	Brown
B	A	CODE-2	Black
B	B	CODE-3	Brown
B	C	CODE-4	Yellow

Hence, balancer shaft journal beari

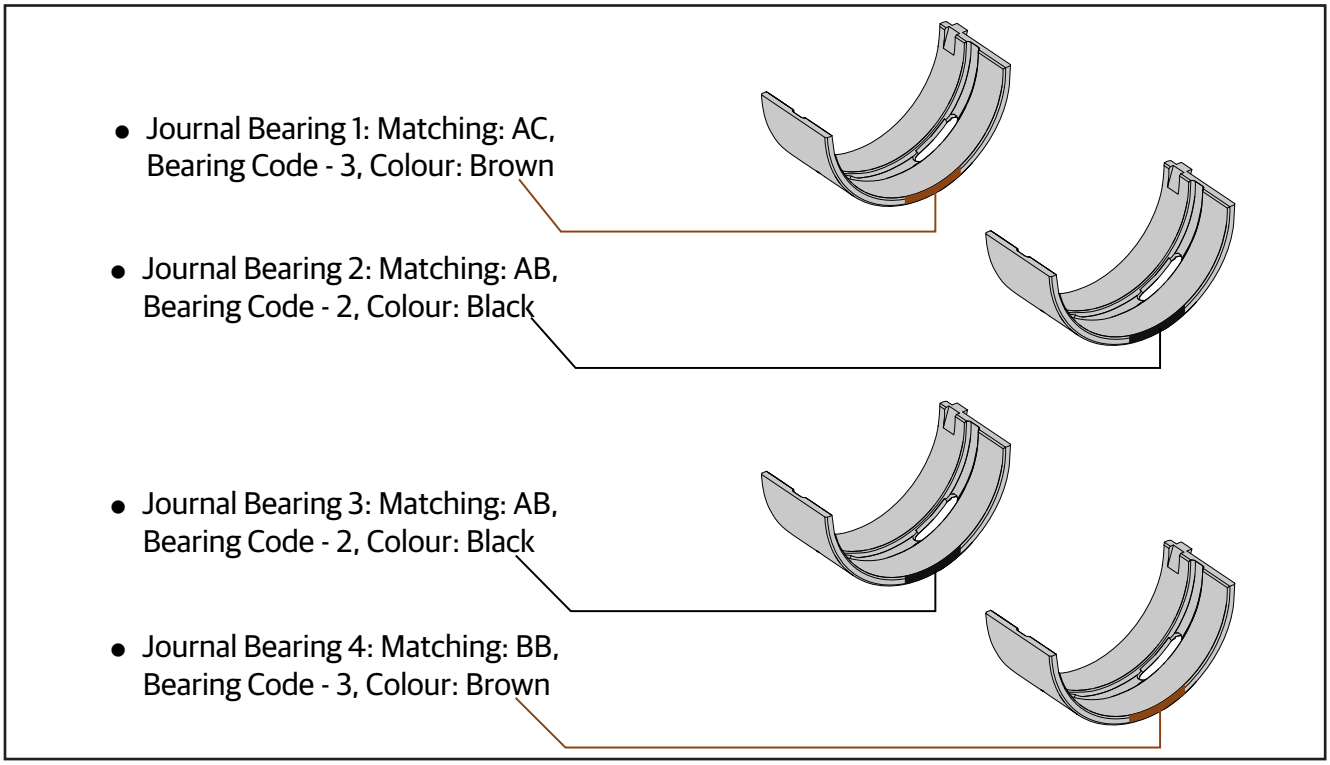

⚠ CAUTION

Ensure the journal bearing seating areas in the upper and lower crankcases are clean and dry.

Ensure the bearings are correctly positioned and aligned before they are fixed into the crankcases.

Do not interchange the journal bearings, they should be installed in their correct sequential order only.

Do not use any tools while installing bearings as it may damage the bearings.

5.7.3. Connecting rod journal bearings

Connecting rod journal bearings selection chart (1.3)

Connecting rod	Crankshaft	Bearing code	Bearing Color
1	1	CODE-1	Green
1	2	CODE-2	Black
2	1	CODE-2	Black
2	2	CODE-3	Brown

NOTE
• *Crankshaft punch mark will be with numerics 1 & 2 only.*
• *Connecting rod punch mark will be with numerics containing 1 & 2 mark only.*

Example:

The below sample illustration is only for explanation for selecting connecting rod journal bearing.

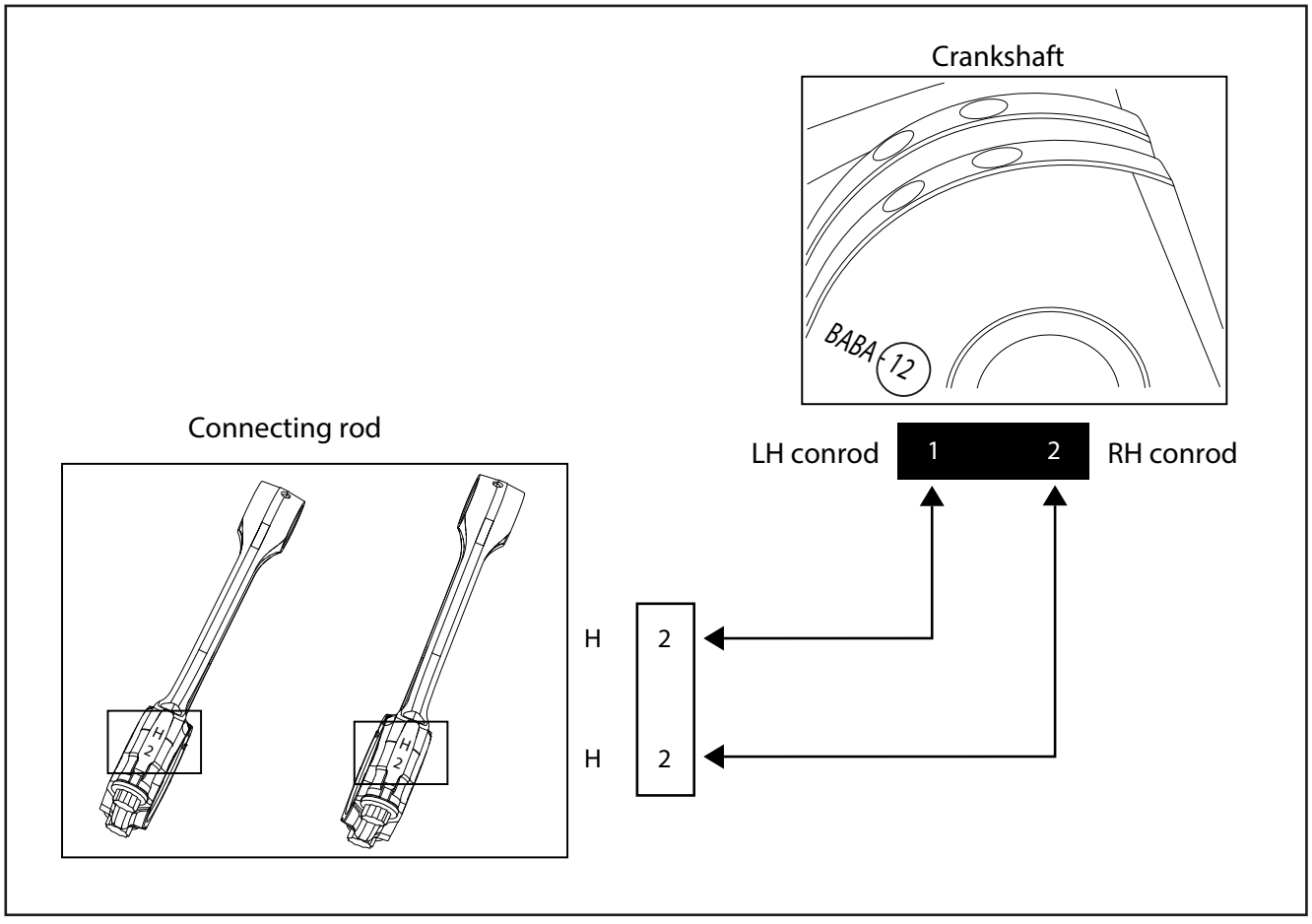

The connecting rod punch mark should be matched with crankshaft numeric punch mark and then the bearing can be selected by referring chart (1.3). Thus the bearing would be Code-2, Code-3

Connecting rod	Crankshaft	Bearing code	Bearing Color
1	1	CODE-1	Green
1	2	CODE-2	Black
2	1	CODE-2	Black
2	2	CODE-3	Brown

Hence connecting rod bearing would be in the following order

- Connecting rod LH: Matching: 21, Bearing Code - 2, Colour: Black

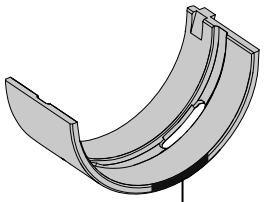

- Connecting rod RH: Matching: 22, Bearing Code - 3 Colour: Brown

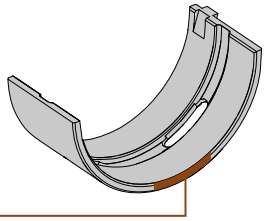

⚠ CAUTION

Ensure the journal bearing seating areas in the connecting rod and connecting rod cup are clean and dry.

Ensure the bearings are correctly positioned and aligned before they are fixed into the connecting rod and connecting rod cup.

Do not interchange the bearings. They should be installed in their correct order only.

Do not use any tools to install the bearings in the connecting rods/connecting rod cups as it may damage the bearings.

ENGINE ASSEMBLY

CONTENTS PAGE

5.8 Engine Assembly 257

5.8.1. Components Sub Assembly in Upper Crankcase 257

5.8.2. Crankshaft 258

5.8.3. Connecting Rods 259

5.8.4. Balancer Shaft 260

5.8.5. Counter shaft Components 262

5.8.6. Driveshaft Components 266

5.8.7. Gear Shift Cam Drum 270

5.8.8. Shifter fork 271

5.8.9. Crankcases closing 273

5.8.10. Oil Pressure Switch 281

5.8.11. Oil Bypass 281

5.8.12. Oil Strainer 282

5.8.13. Oil Pan 282

5.8.14. Drain Plug 282

5.8.15. Pistons and Rings 283

5.8.16. Cylinder Barrel Dowels on Crankcase 284

5.8.17. Cylinder Barrel Gasket on Crankcase 284

5.8.18. Piston LH in Cylinder Barrel 284

5.8.19. Piston RH in Cylinder Barrel 285

5.8.20. Cylinder Head Gasket on Cylinder Barrel 286

5.8.21. Floating Chain Pad 286

5.8.22. Components in Cylinder Head 288

5.8.23. Cylinder Head on Cylinder Barrel 289

5.8.24. Starter Clutch to Magneto Rotor 290

CONTENTS PAGE

5.8.25. Woodruff Key on Crankshaft 291
5.8.26. Magneto Rotor on Crankcase 291
5.8.27. Camshaft Sub-Assembly 292
5.8.28. Timing Chain Tensioner 297
5.8.29. Rocker Arms in Carriers LH and RH 298
5.8.30. Rocker Carrier on Cylinder Head LH 298
5.8.31. Rocker Carrier on Cylinder Head RH 299
5.8.32. Tappet Clearance Adjustment 300
5.8.33. Cover Cylinder Head 302
5.8.34. Inlet Manifold Rubber Flanges LH & RH 303
5.8.35. Star Index 303
5.8.36. Star Index Stopper 304
5.8.37. Shifter Selector Shaft 304
5.8.38. Oil Pump 306
5.8.39. Clutch Assembly 309
5.8.40. Oil Level Window in Clutch Cover 312
5.8.41. Clutch Actuating Lever Assembly 312
5.8.42. Clutch Cover 313
5.8.43. Gear Position Sensor (GPS) 315
5.8.44. FD Sprocket 315
5.8.45. Magneto Cover Sub Assembly 316
5.8.46. Starter Motor 318
5.8.47. Breather Box 319
5.8.48. Oil Filter 320

5.8 Engine Assembly

5.8.1. Components Sub Assembly in Upper Crankcase

Crankshaft Journal Bearings

NOTE
• *In case the crankshaft is being resued, please **Do not** disturb OR remove the journal bearings from the crankcase.* • *Refer journal bearing selection chart before installing journal bearings into crankcase.* • *Ensure journal bearings are cleaned and well lubricated.*

⚠ CAUTION
Install journal bearings carefully by hand. Do not use any tool. It may scratch the component.

- Match crankcase bearing code with the crankshaft code.

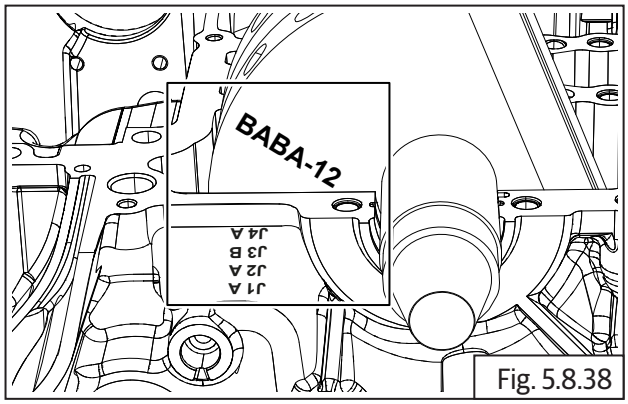

Fig. 5.8.38

- Select appropriate bearing and assemble journal bearings on crankcase from LH side order.
- Locate crankshaft journal bearing in upper crankcase and ensure that journal bearings **(a)** are seated properly on crankcase **(b)**.

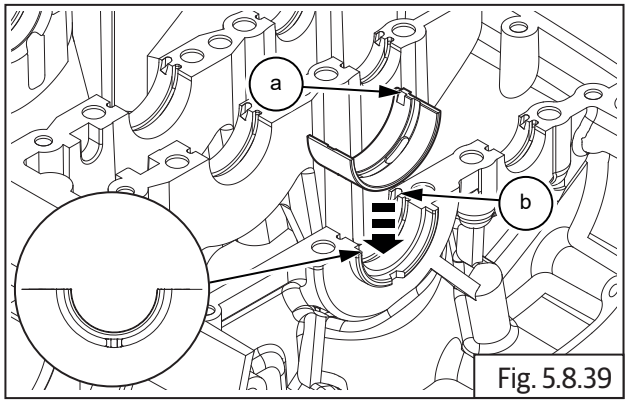

Fig. 5.8.39

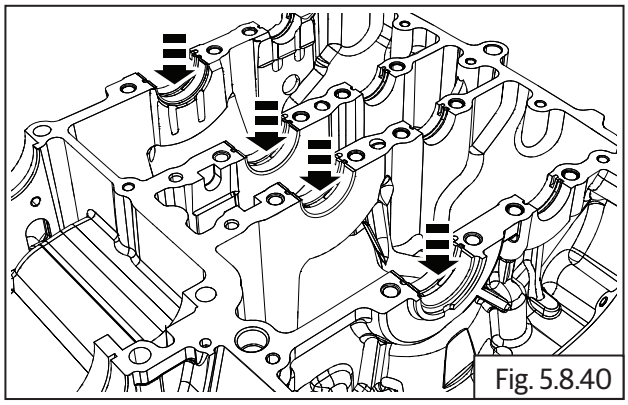
Fig. 5.8.40

Balancer shaft Journal Bearings

NOTE
• *In case the Balancer shaft is being reused, please **Do not** disturb OR remove the journal bearings from the crankcase.* • *Refer journal bearing selection chart before installing journal bearings into crankcase.* • *Ensure journal bearings are cleaned and well lubricated.*

⚠ CAUTION
Install journal bearing carefully by hand. Do not use any tool. It may scratch the component.

- Match crankcase bearing code with balancer shaft code.

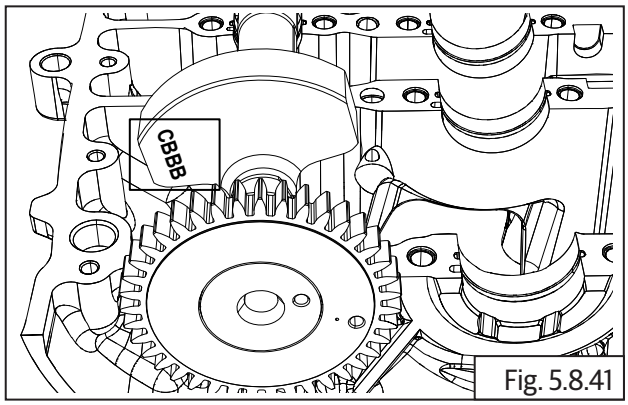

Fig. 5.8.41

- Select appropriate bearing and assemble journal bearings on crankcase from LH side.
- Align mark **(a)** of journal bearing with edge **(b)** in crankcase for balancer shaft.

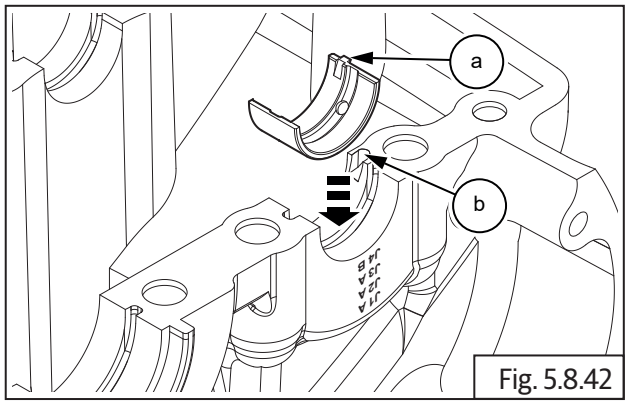

Fig. 5.8.42

Dowels

⚠ CAUTION

Ensure the dowels are correctly located in the upper crankcase.

- Locate and gently press dowels **(a)** in the upper crankcase and ensure they are seated properly.

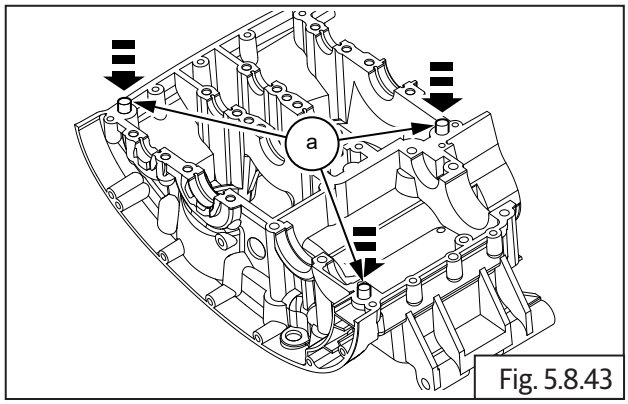

Fig. 5.8.43

Timing Chain Tensioner Pad

- Position timing chain tensioner pad **(a)** in upper crankcase **(b)** with its rubber pad towards the cylinder barrel seating area.

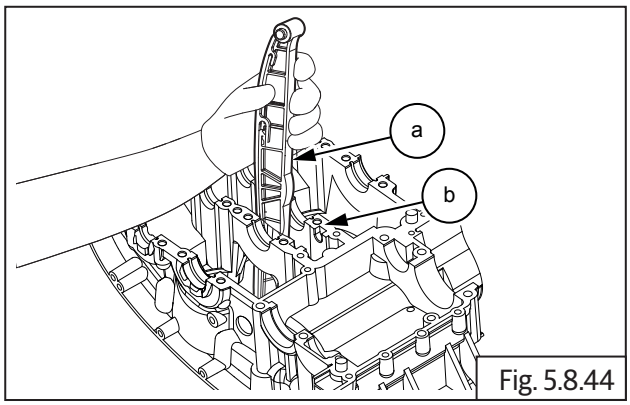

Fig. 5.8.44

- Ensure the lock pegs of the chain tensioner pad are seated correctly in the slots **(a)** in the upper crankcase.

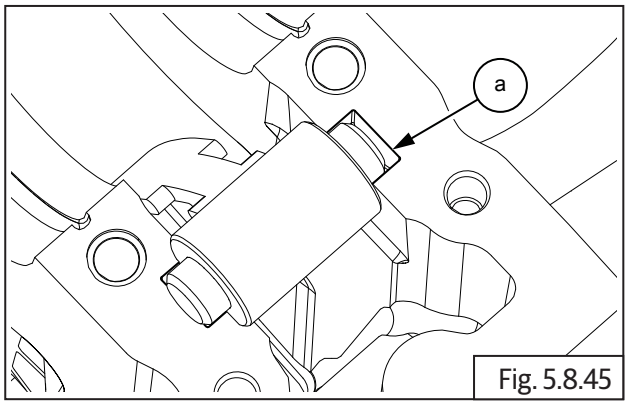

Fig. 5.8.45

5.8.2. Crankshaft

NOTE

- *Ensure journal bearings are cleaned and well lubricated.*

- Assemble timing chain **(a)** on crankshaft gear **(b)**. Ensure it is seated properly.

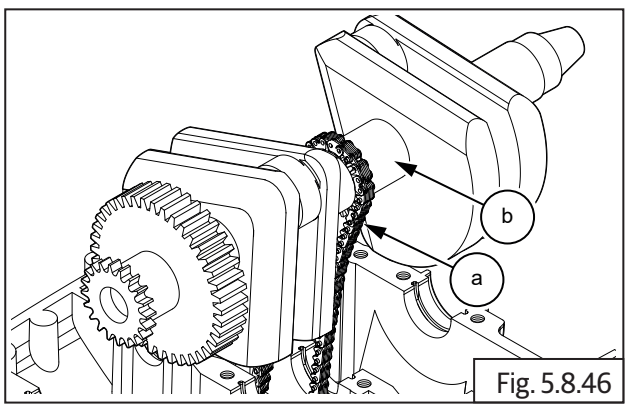

Fig. 5.8.46

- Gently locate crankshaft **(a)** on crankcase **(b)** duly ensuring the following:
  -The timing chain is correctly routed into the cylinder barrel seating area.
  -The gear on the crankshaft is on the RH side (clutch side) of the upper crankcase.

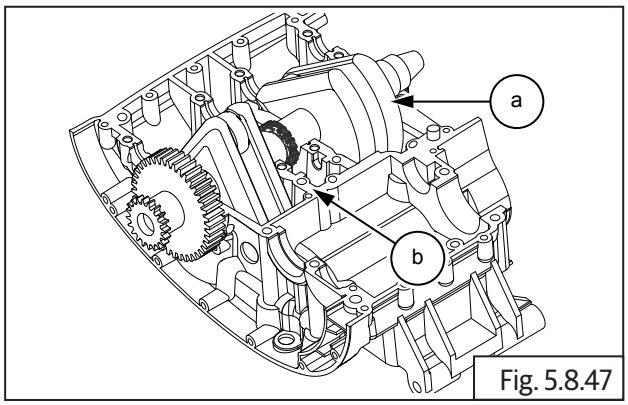

Fig. 5.8.47

5.8.3. Connecting Rods

NOTE

- *Ensure new journal bearings are located correctly in the connecting rods and caps.*
- *Replace connecting rod bolts whenever removed.* **DO NOT** *reuse*

- Connecting rod bolts are for one time use only. **Do not** reuse connecting rod bolts. Always replace them.
- **Do not** interchange connecting rod cap.
- Ensure the lug **(a)** in journal bearing is located in the grooves **(b)** on both connecting rod and cap is seated properly.

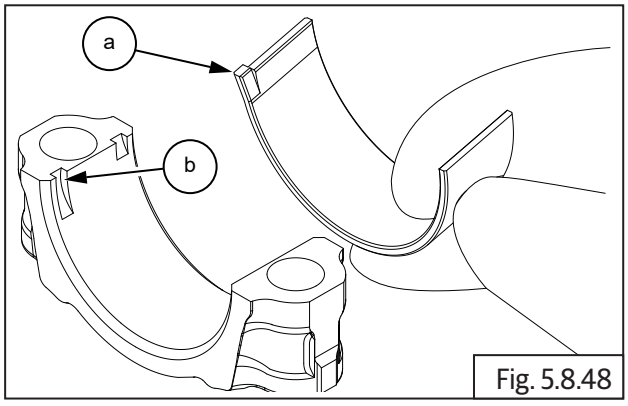

Fig. 5.8.48

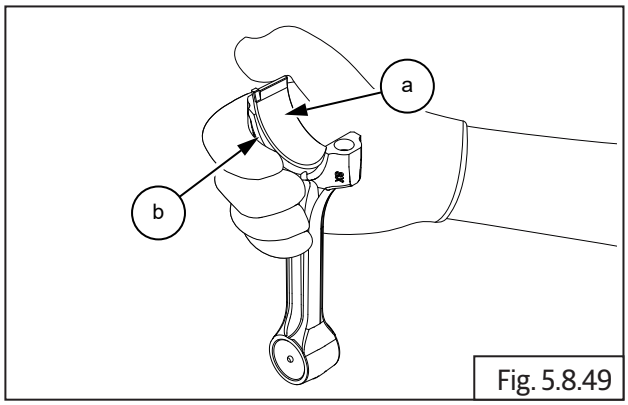

Fig. 5.8.49

⚠ WARNING

Ensure connecting rods Do not get damaged during assembly.

Ensure crankshaft position is such that connecting rods are not projecting out of spigot.

Support crankcase such that it is atleast 3 cm above surface table.

- Insert connecting rod big end through the cylinder barrel seating area and ensure it is seated properly on the crankshaft.
- Support connecting rod to prevent it from falling off.
- Position connecting rod cap on the crankshaft and ensure the mounting holes of the cap and connecting rod are aligned.

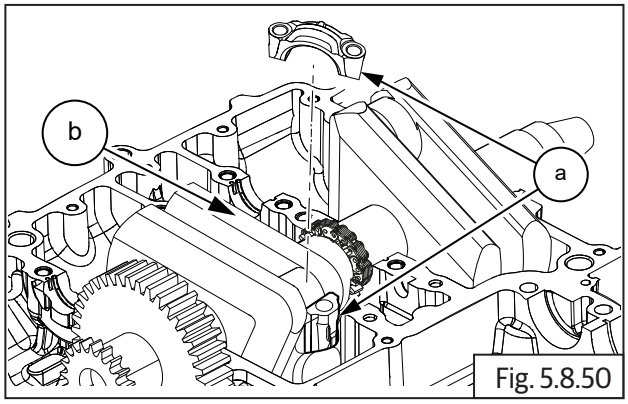

Fig. 5.8.50

- Lubricate and locate 2 Nos. Bi-hexagon bolts **(M9) (a)** on cap and tighten as follows:

  Initially the bolts are first torqued evenly

  subsequently a second torque is applied evenly.

  Finally angle torqued as specified below.

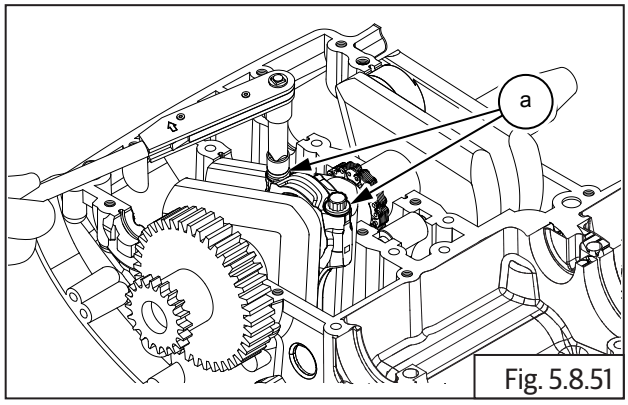

Fig. 5.8.51

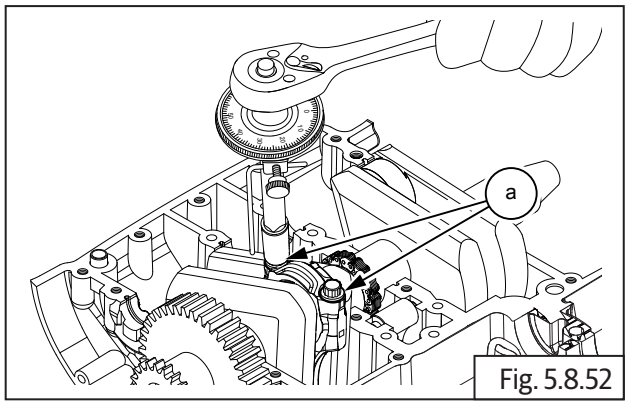

Fig. 5.8.52

	13 mm Bi-hexagon socket with Ratchet
1st Torque	40 N-m/4 kgf-m
2nd Torque	14 N-m/1.4 kgf-m
Angular Torque	75° (deg)

- Repeat above process to assemble the other connecting rod on the crankshaft.

5.8.4. Balancer Shaft

- Ensure the punch mark on the crankshaft gear **(b)** is towards the front of the upper crankcase.
- Locate balancer shaft in upper crankcase duly ensuring the punch mark on the gear **(a)** is aligned with the punch mark on the crankshaft gear.
- Ensure both the gears are meshed correctly.

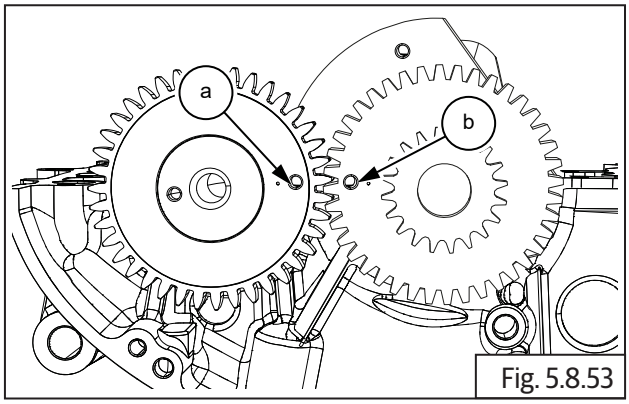

Fig. 5.8.53

Counter shaft Assembly Sequence

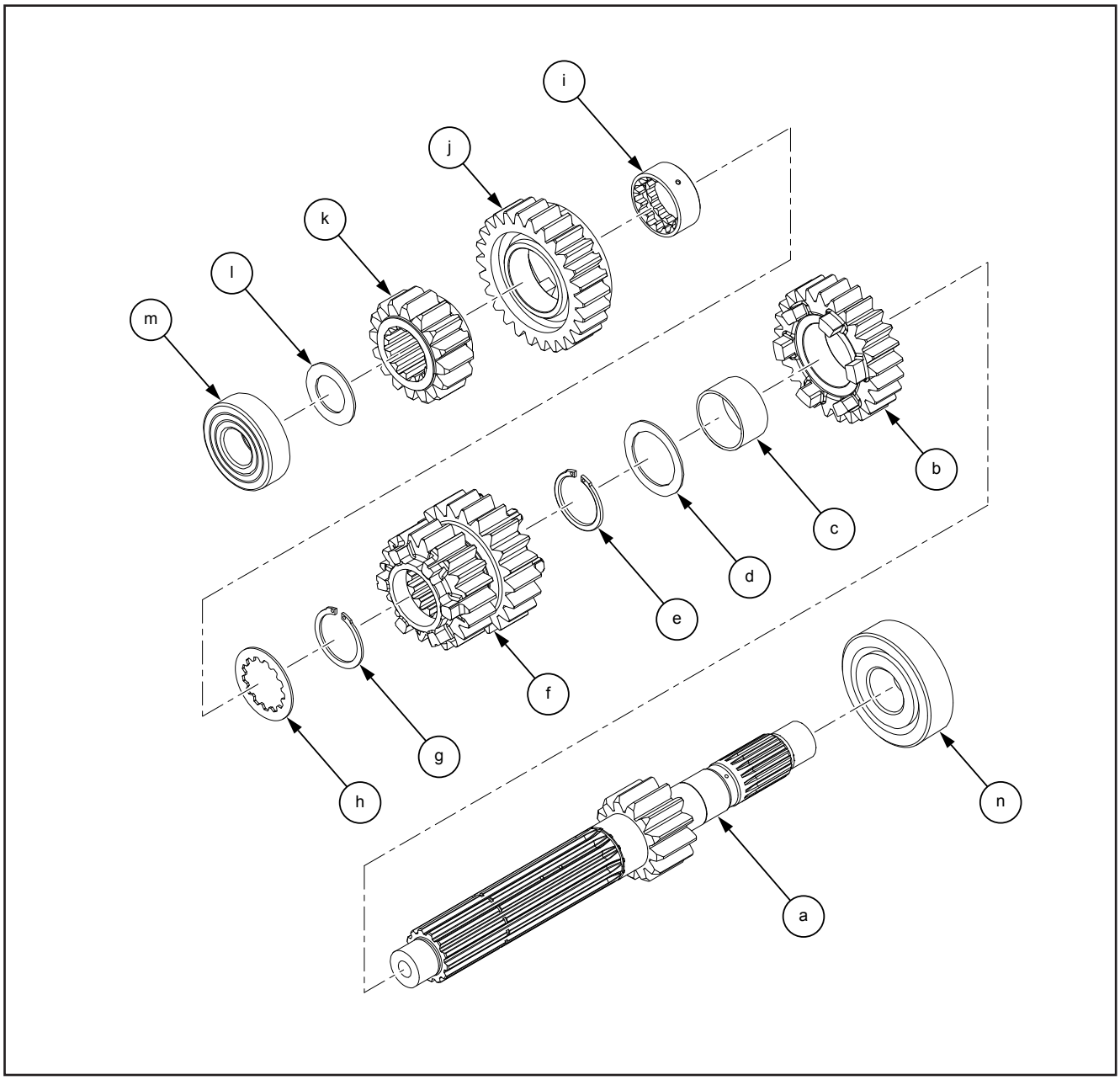

Item No.	Description	Quantity	Item No.	Description	Quantity
a	Counter shaft with 1st Gear	1	h	Splined Plate Washer	1
b	5th Gear (24 teeth)	1	i	Splined Bush	1
c	Plain Bush	1	j	6th Gear (26 teeth)	1
d	Thrust Washer	1	k	2nd Gear (16 teeth)	1
e	Circlip	1	l	Thrust Washer	1
f	Double Gear (3rd and 4th Gear) (21 teeth)	1	m	Bearing	1
g	Circlip	1	n	Bearing	1

NOTE
• ***Do not*** *reuse thrust washers, circlips, collar bush. Always replace with new parts.* • *Ensure all components are cleaned and lubricated with recommended lubricants before assembly.* • *The Counter shaft gears can be recognized by size: the gear with the smallest diameter is 2nd gear, and the one with largest is 6th gear. Ensure that all parts are put back in correct sequence and all circlips and washers are incorporated in correct places.*

5.8.5. Counter shaft Components

- Assemble ball bearing **(a)** on Counter shaft **(b)** from short end and ensure it is fully seated against the gear on driveshaft.

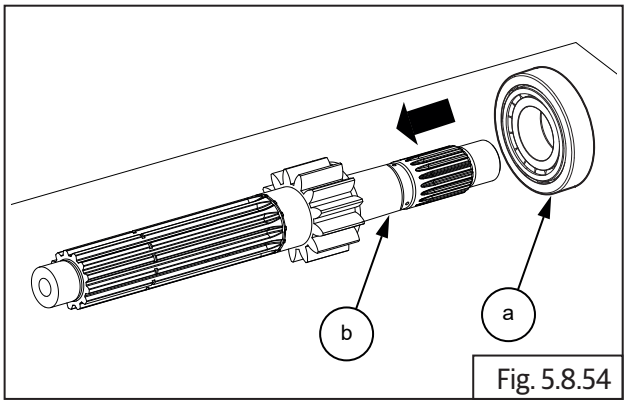

Fig. 5.8.54

- Assemble 5th gear **(a)** on Counter shaft **(b)** from longer end and ensure machined surface of gear is facing Counter shaft gear and lugs are facing outside.

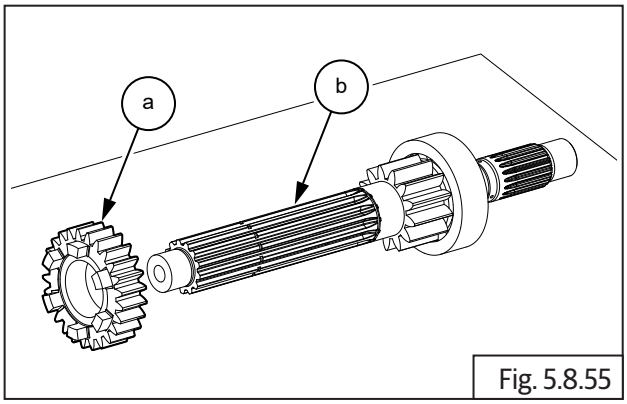

Fig. 5.8.55

- Assemble plain bush **(a)** on Counter shaft **(b)**.
- Ensure oil hole in plain bush is aligned with oil hole in Counter shaft.

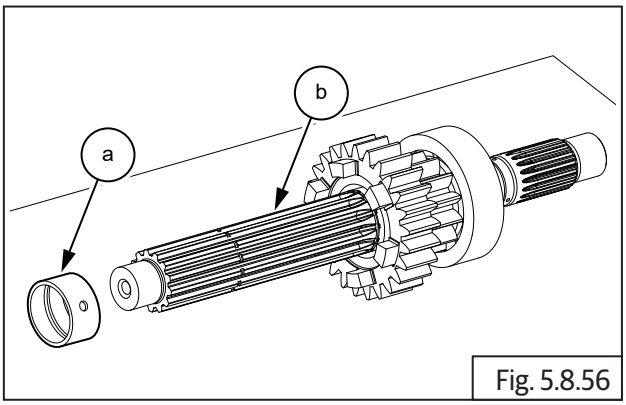

Fig. 5.8.56

NOTE
• *Ensure bush is fully seated against 5th gear on Counter shaft*

- Assemble 1st plain thrust washer **(a)** on Counter shaft **(b)** and ensure it is fully seated against 5th gear.

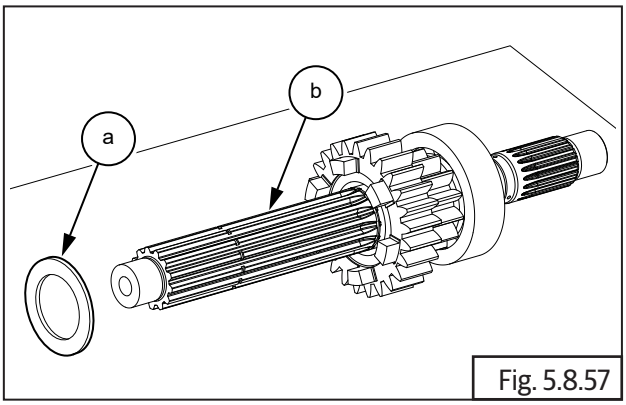

Fig. 5.8.57

- Assemble 1st circlip **(a)** on groove on Counter shaft **(b)** and ensure it is seated properly in the groove near 5th gear.
- Gently rotate circlip without expanding to ensure it is properly seated.

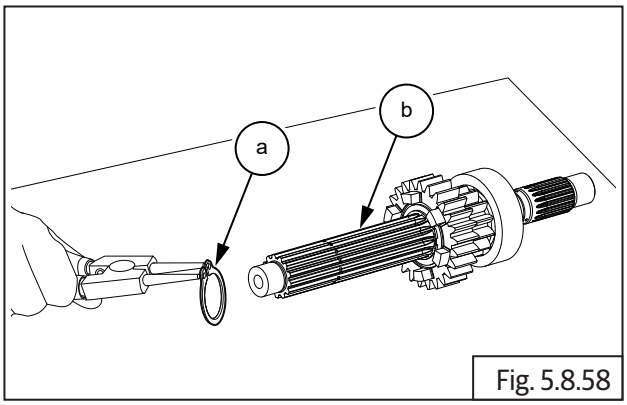

Fig. 5.8.58

	Circlip plier

- Assemble 3rd and 4th (double gear) **(a)** on Counter shaft **(b)** such that the 4th gear is facing the lugs on the 5th gear .

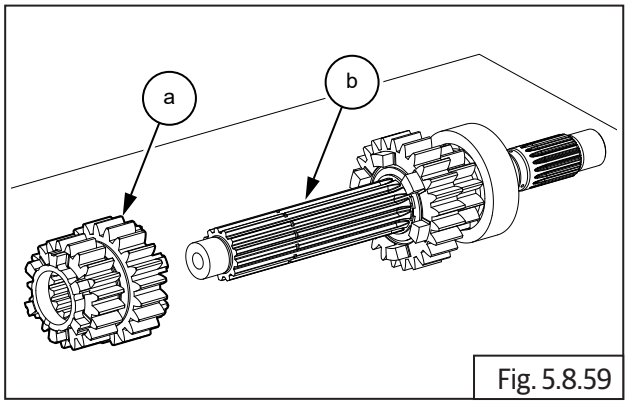

Fig. 5.8.59

- Assemble 2nd circlip **(a)** on groove on Counter shaft **(b)** and ensure it is seated properly on groove.

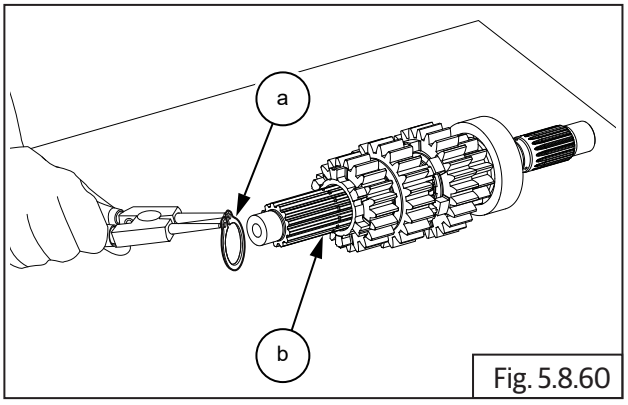

Fig. 5.8.60

	Circlip plier

- Assemble splined thrust washer **(a)** on counter-shaft **(b)** and ensure it is seated properly against circlip.

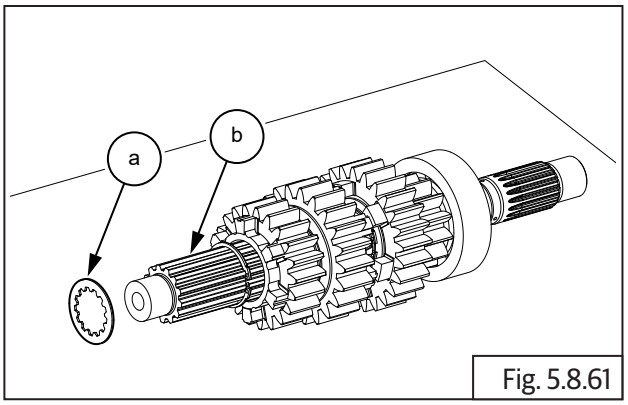

Fig. 5.8.61

- Ensure oil hole in splined bush is aligned with oil hole in Counter shaft and assemble splined bush **(a)** on Counter shaft **(b)**.

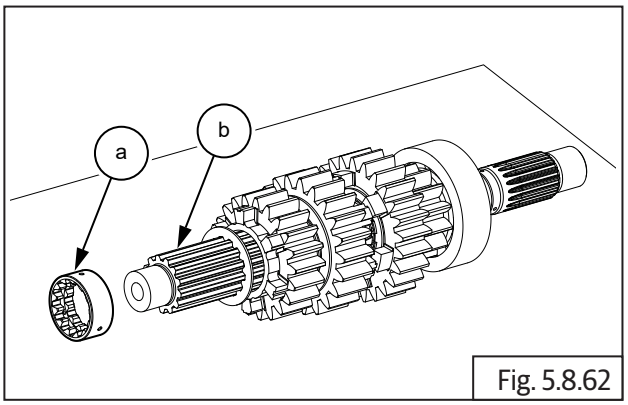

Fig. 5.8.62

NOTE
• *Ensure bush is fully seated against thrust washer on Counter shaft.*

- Assemble 6th gear **(a)** on Counter shaft **(b)** and ensure lugs are facing double gear.

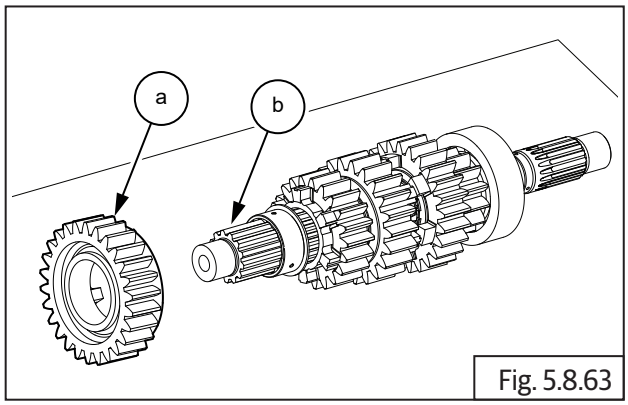

Fig. 5.8.63

- Assemble 2nd gear **(a)** on Counter shaft **(b)**.

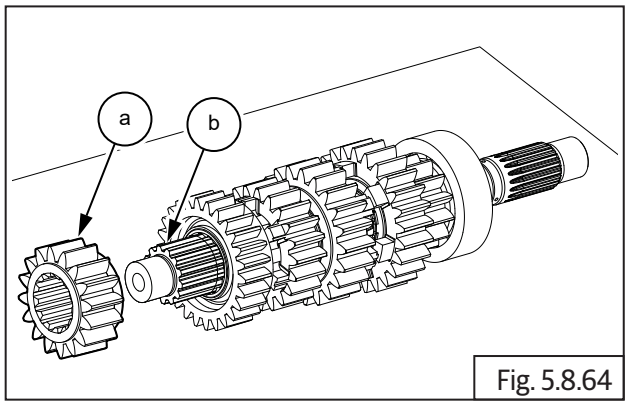

Fig. 5.8.64

- Assemble thrust washer **(a)** on Counter shaft **(b)**.

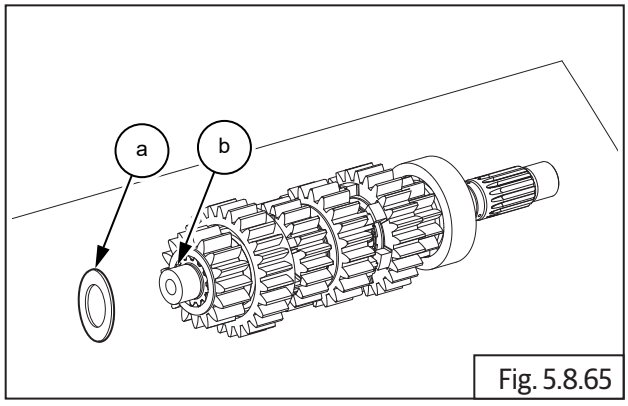

Fig. 5.8.65

- Assemble ball bearing **(a)** on Counter shaft **(b)** and ensure it is properly seated against thrust washer on Counter shaft.

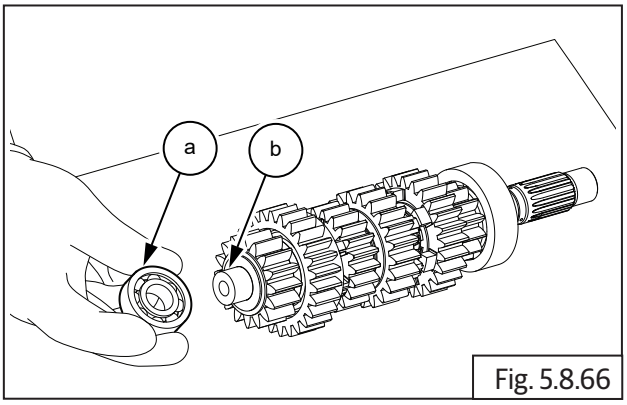

Fig. 5.8.66

- Locate Counter shaft bearing stopper plate **(a)** and assemble 2 Nos. Hex head bolts **(M5) (b)**.

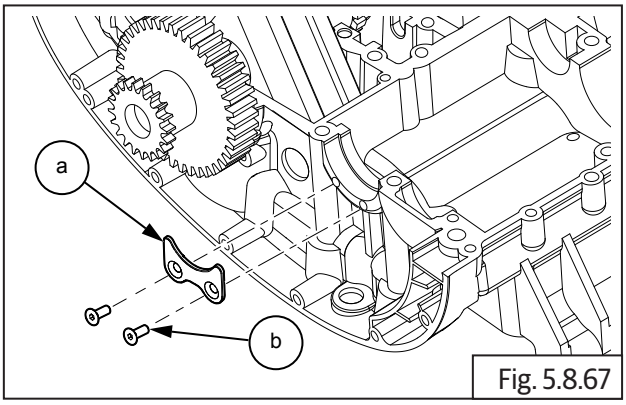

Fig. 5.8.67

	4 mm Allen socket with Ratchet

- Assemble the Counter shaft assembly **(a)** with gears on the upper crankcase **(b)** with its splined end towards the RH side (clutch side).

- Ensure the two bearings are correctly seated in their respective housings.

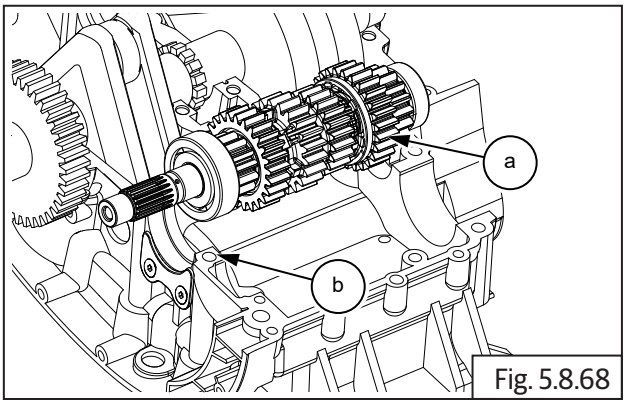

Fig. 5.8.68

Driveshaft Assembly Sequence

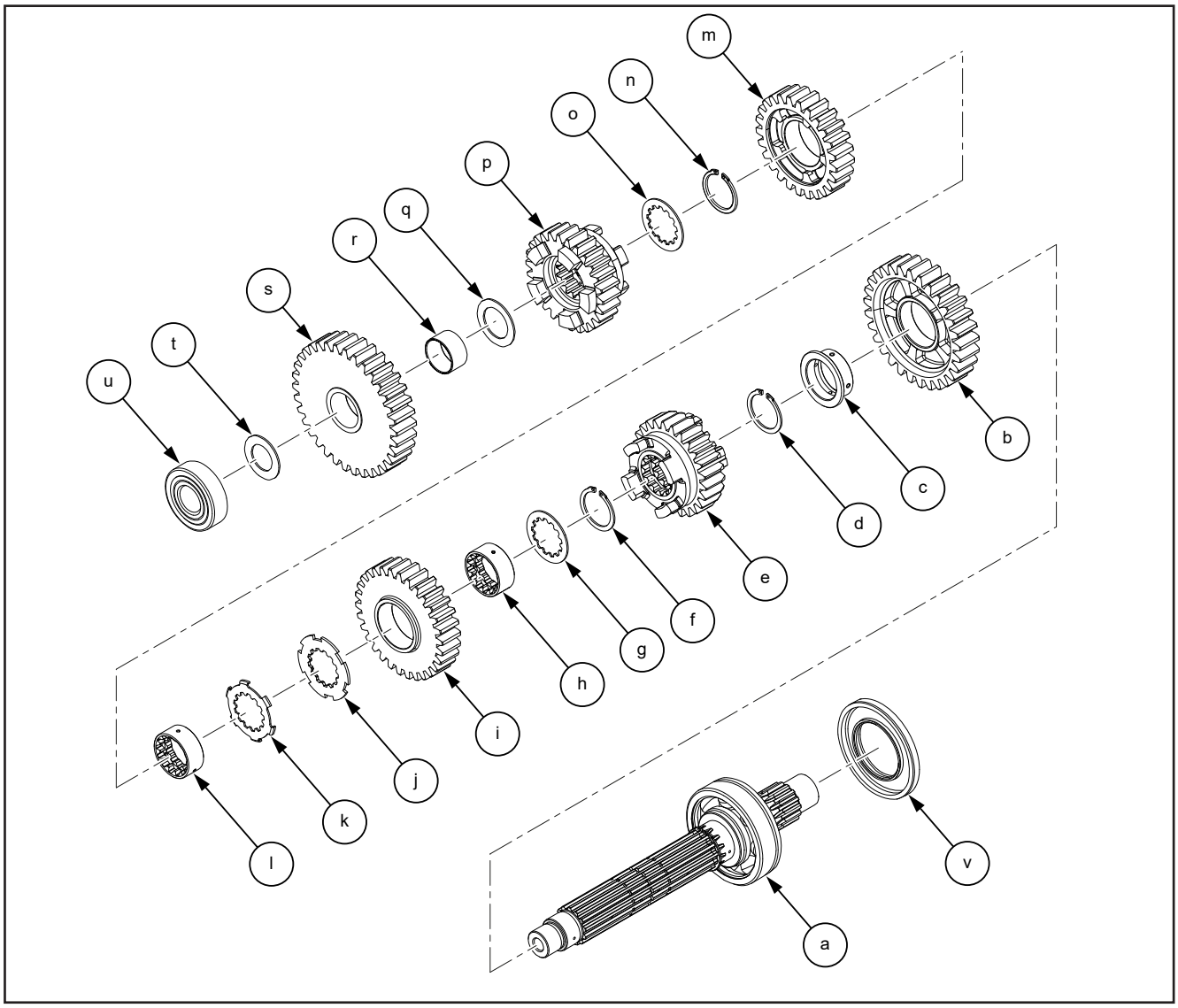

Item No.	Description	Quantity	Item No.	Description	Quantity
a	Driveshaft and Bearing	1	l	Splined bush	1
b	2nd Gear (29 teeth)	1	m	4th Gear (25 teeth)	1
c	Plain color bush	1	n	Splined thrust washer	1
d	Circlip	1	o	Circlip	1
e	6th Gear (25 teeth)	1	p	5th Gear (26 teeth)	1
f	Circlip	1	q	Thrust washer	1
g	Splined thrust washer	1	r	Plain bush	1
h	Splined bush	1	s	1st gear (34 teeth)	1
i	3rd Gear (30 teeth)	1	t	Thrust washer	1
j	Lock Splined washer	1	u	Bearing	1
k	Splined washer lock	1	v	Rubber seal	1

5.8.6. Driveshaft Components

NOTE
• ***Do not*** *resue thrust washers, circlips, collar bush. Always replace with new parts.*
• *Ensure each component is cleaned and lubricated with recommended lubricant.*
• *The driveshaft gears can be recognized by size: the gear with the smallest diameter is 6th gear, and the one with largest is 1st gear. Ensure that all parts are put back in correct sequence and all circlips and washers are incorporated in correct place.*

- Assemble ball bearing **(a)** on driveshaft **(a)** from short end and ensure it is fully seated against stopper on driveshaft.

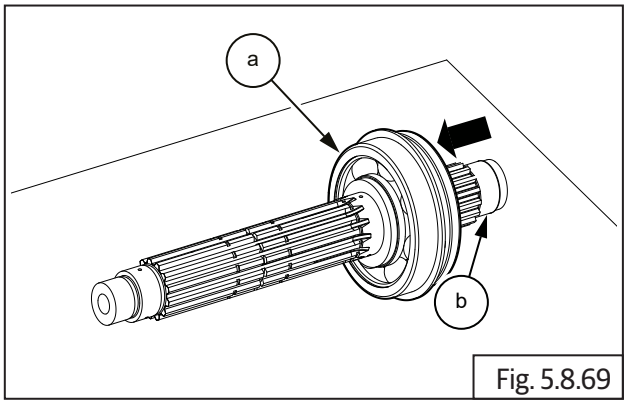

Fig. 5.8.69

- Ensure machined surface of 2nd gear is facing bearing and assemble 2nd gear **(a)** on driveshaft **(b)** from the longer splines end.

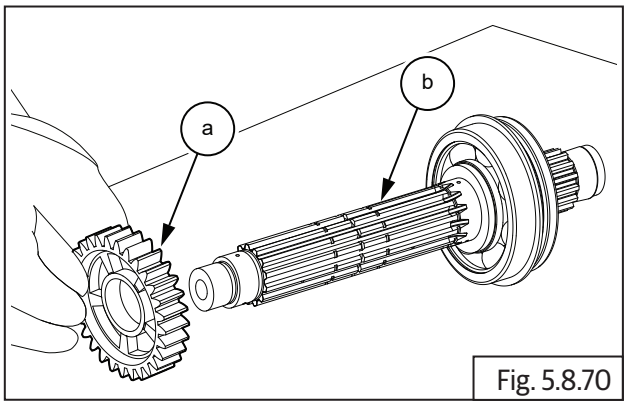

Fig. 5.8.70

- Ensure collar on bush **(a)** is facing outside and assemble 2nd gear collared bush on driveshaft. Ensure bush is seated properly inside 2nd gear.

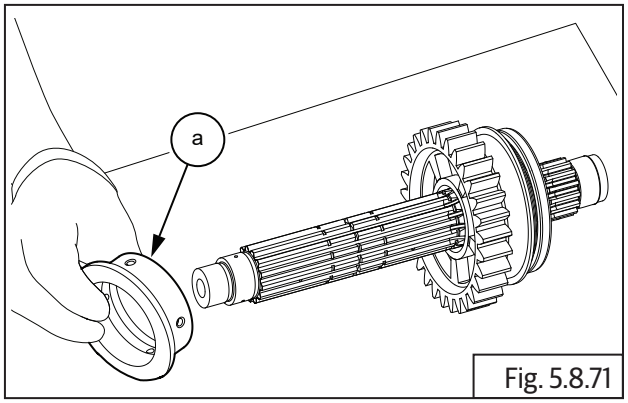

Fig. 5.8.71

NOTE
• *Ensure bush is seated properly inside 2nd gear.*

- Assemble 1st circlip **(a)** on innermost groove in driveshaft **(b)** and ensure it is seated properly on groove against 2nd gear bush.

NOTE
• *Gently rotate circlip without expanding to ensure it is properly seated in groove in driveshaft.*

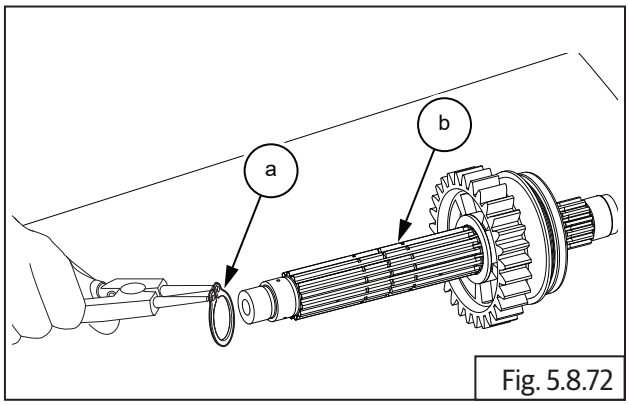

Fig. 5.8.72

	Circlip plier

- Assemble 6th gear **(a)** on driveshaft **(b)** ensuring lugs on larger face of gear are facing 2nd gear.

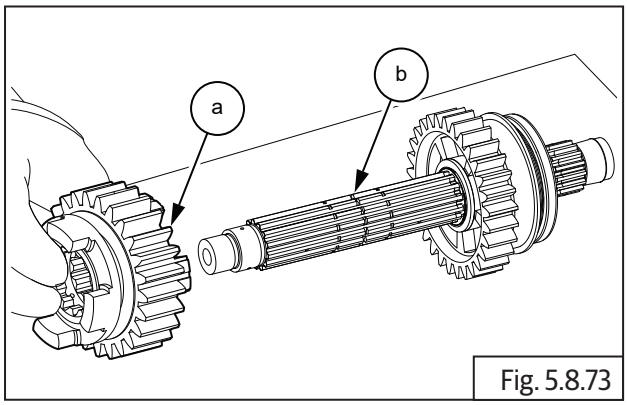

Fig. 5.8.73

- Assemble 2nd circlip **(a)** on inner groove on driveshaft **(b)** and ensure it is seated properly on groove.

NOTE
• *Gently rotate circlip without expanding to ensure it is properly seated in groove in driveshaft.*

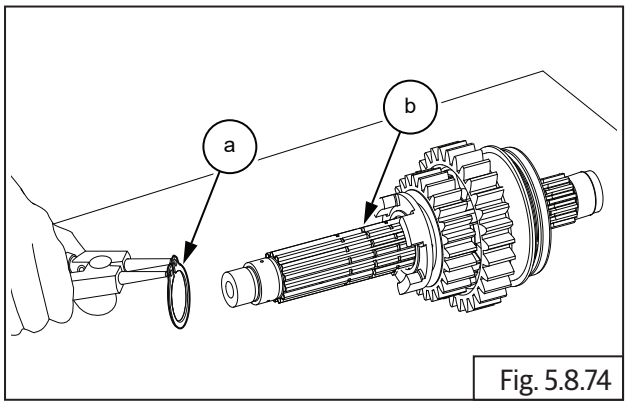

Fig. 5.8.74

	Circlip plier

- Assemble splined thrust washer **(a)** on driveshaft **(b)** and ensure it is seated properly against circlip.

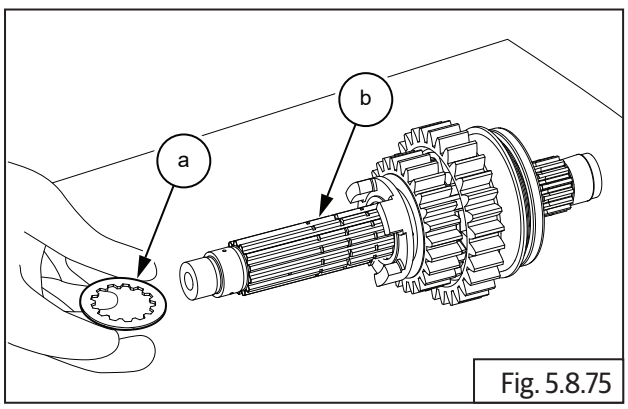

Fig. 5.8.75

- Ensure oil hole in 1st splined bush **(a)** is aligned with oil hole in driveshaft **(b)** and assemble splined bush on driveshaft.

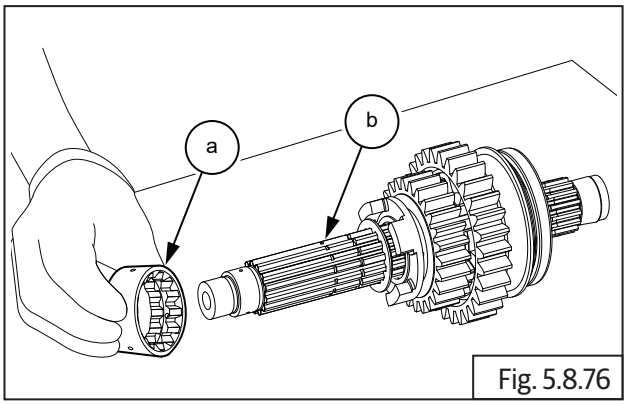

Fig. 5.8.76

NOTE
• *Ensure bush is fully seated against thrust washer in driveshaft.*

- Ensure collar on 3rd gear **(a)** is facing outside and assemble 3rd gear on driveshaft **(b)**.

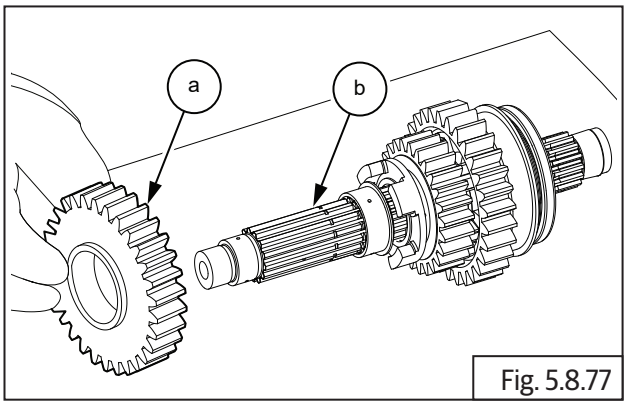

Fig. 5.8.77

NOTE
• *Ensure gear is fully seated on splined bush.*

- Insert thrust lock washer **(a)** with internal and external splines on driveshaft **(b)** and align internal splines with groove in driveshaft.
- Rotate lock washer such that the washer locks in place on driveshaft and cannot come out.

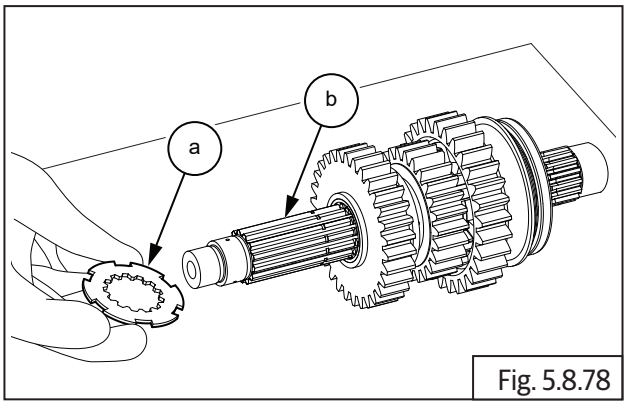

Fig. 5.8.78

- Assemble splined lock washer **(a)** on driveshaft **(b)** such that the outside tabs are facing the lock washer on driveshaft.
- Ensure outer tabs of lock washer are aligned and fully seated in outer splines of lock washer.

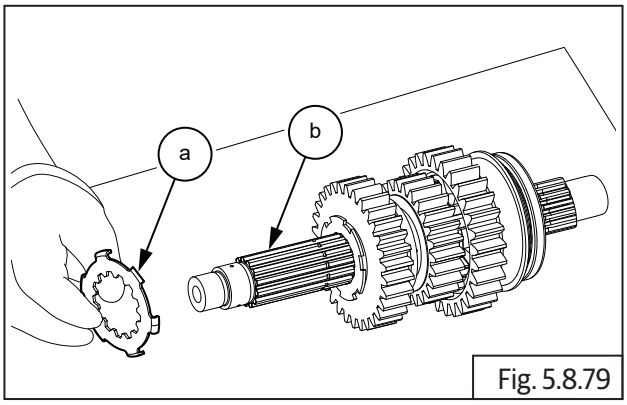

Fig. 5.8.79

- Ensure oil hole in 2nd splined bush **(a)** is aligned with oil hole in driveshaft **(b)**) and assemble splined bush on driveshaft.

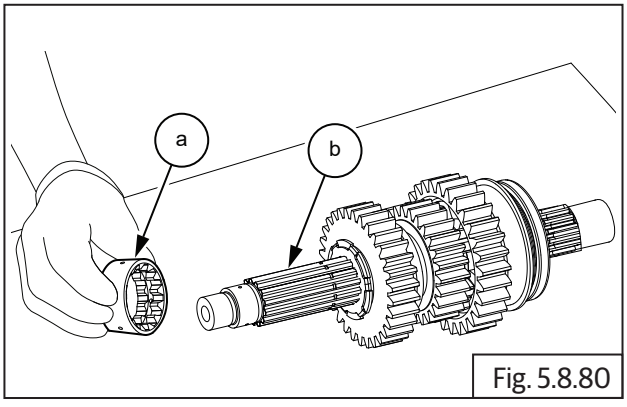

Fig. 5.8.80

NOTE

- *Ensure bush is fully seated against lock washer on driveshaft.*

- Assemble 4th gear **(a)** on the driveshaft **(b)** with its machined surface facing 3rd gear and recessed lugs of 4th gear facing outside.
- Ensure 4th gear is seated fully on splined bush.

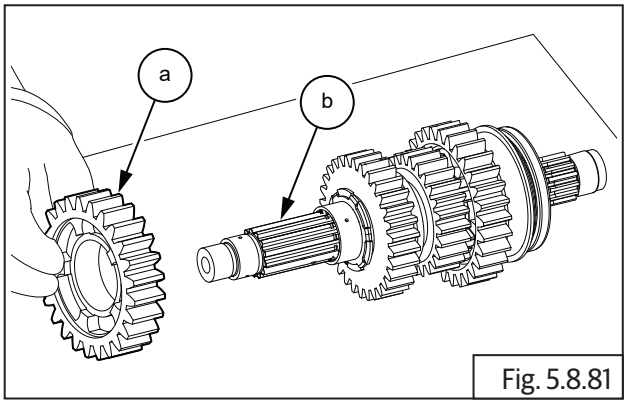

Fig. 5.8.81

- Assemble 2nd splined washer **(a)** on driveshaft **(b)** and ensure it is fully seated against 4th gear.

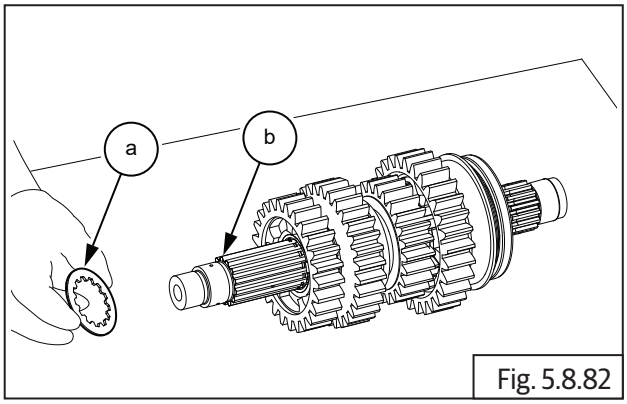

Fig. 5.8.82

NOTE

- *Gently rotate circlip without expanding to ensure it is properly seated in groove in driveshaft.*

- Assemble 3rd circlip **(a)** on groove on driveshaft **(b)** and ensure circlip is properly seated in groove.

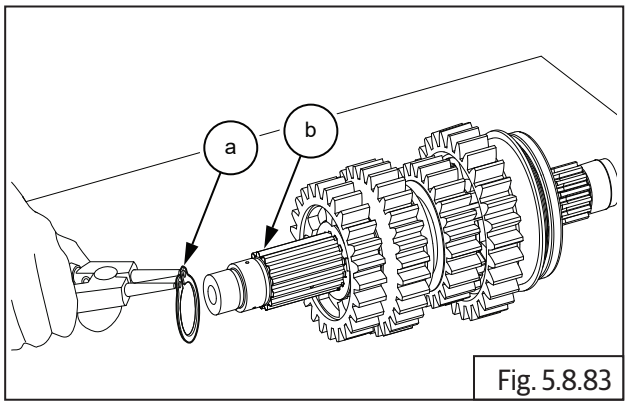

Fig. 5.8.83

	Circlip plier

- Assemble 5th gear **(a)** on driveshaft **(b)** with lugs facing 4th gear.

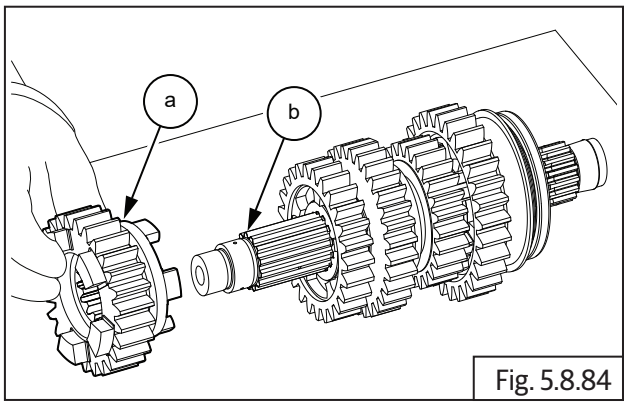

Fig. 5.8.84

- Assemble thrust washer **(a)** on driveshaft **(b)**.

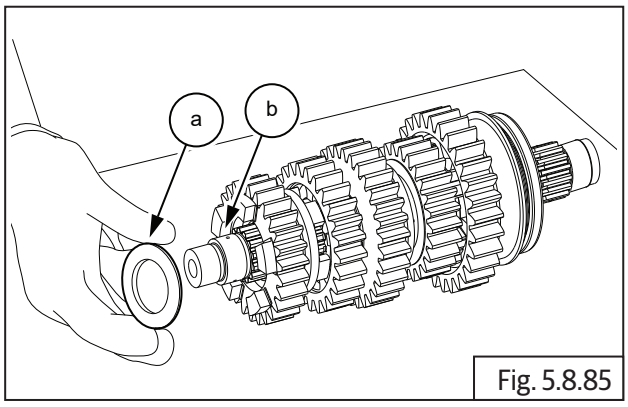

Fig. 5.8.85

- Ensure oil hole in plain bush **(a)** is aligned with oil hole in driveshaft **(b)** and assemble plain bush on driveshaft.

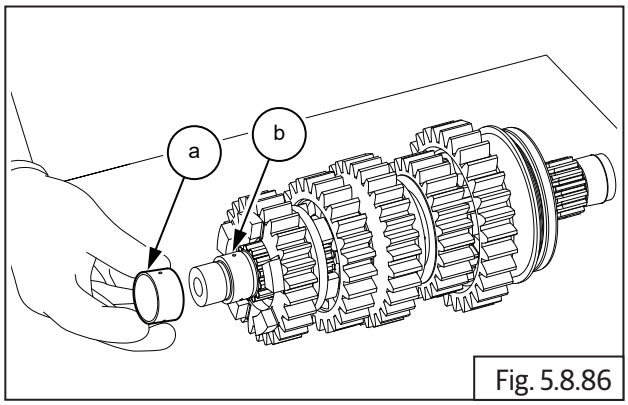

Fig. 5.8.86

NOTE
• *Ensure the bush is fully seated against thrust washer on driveshaft*

- Ensure lugs seating surface of 1st gear is facing lugs of 5th gear; assemble 1st gear **(a)** over bush on driveshaft **(b)**. Ensure the 1st gear is fully seated on bush.

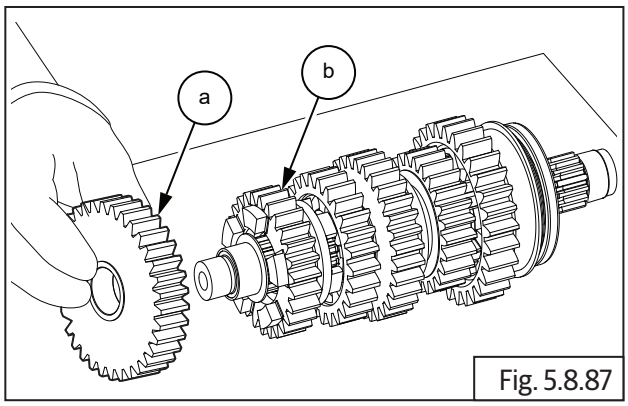

Fig. 5.8.87

- Assemble plain thrust washer **(a)** on driveshaft **(b)** and ensure it is fully seated against the 1st gear.

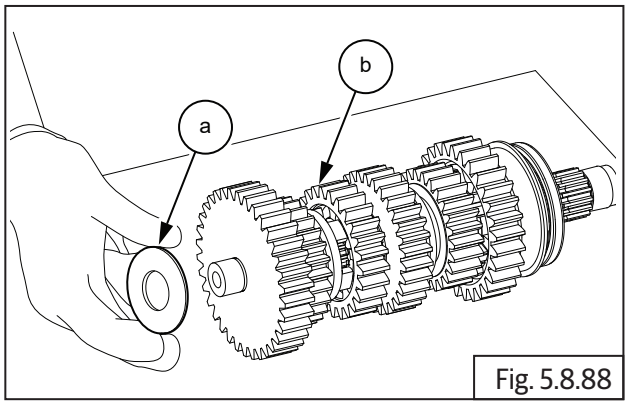

Fig. 5.8.88

- Assemble ball bearing **(a)** on driveshaft **(b)** and ensure it is properly seated against thrust washer on driveshaft.

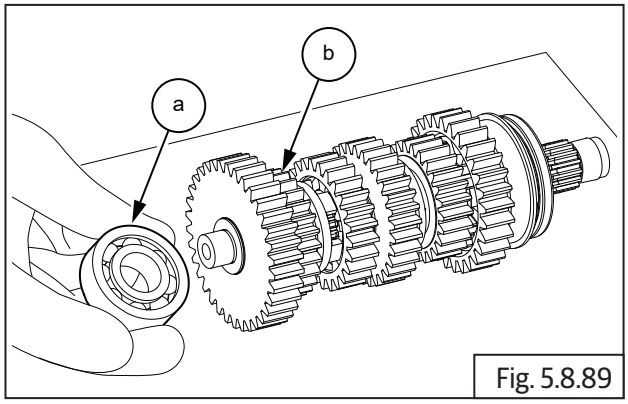

Fig. 5.8.89

- Locate drive shaft assembly with gears on crankcase upper duly ensuring that the splines of the drive shaft are towards the LH side (Magneto side) of upper crankcase and the gears on counter shaft and drive shaft are properly meshed.

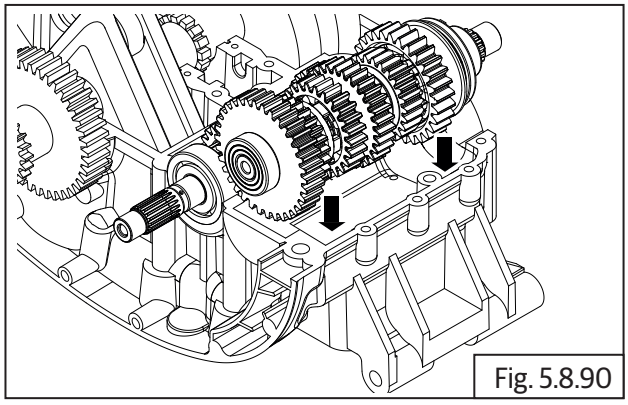
Fig. 5.8.90

Journal bearings in lower crankcse

- Install crankshaft journal bearings into crankcase. Refer journal bearing chart.

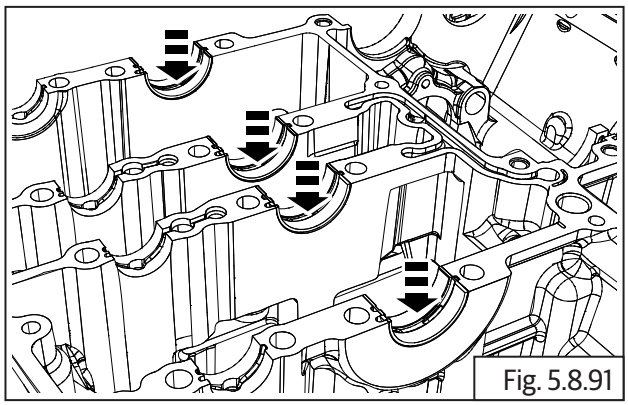
Fig. 5.8.91

5.8.7. Gear Shift Cam Drum

- Assemble needle roller bearing **(a)** in lower crankcase **(b)** from the inside on LH side (Magneto side).
- Insert gear shift cam drum **(c)** into lower crankcase **(b)** from thr RH side (clutch side), duly ensuring the 2 pegs to the gear shift cam drum are towards the RH side (clutch side).

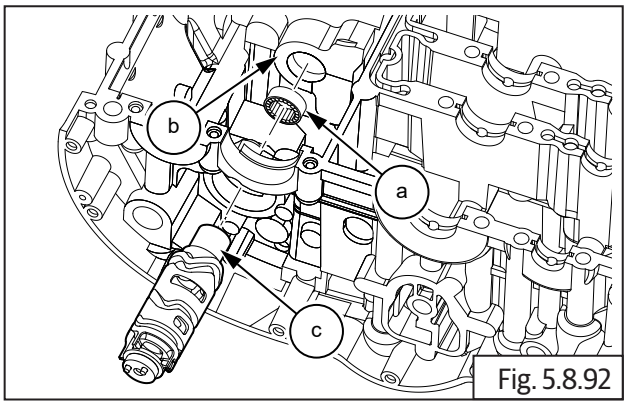

Fig. 5.8.92

SPL	Part No: ST-27543-1
	Part Name: Gear shifter Drum NRB Installer

- Assemble big bearing **(a)** on lower crankcase RH side **(b)** (clutch side) over the gear shift cam drum.

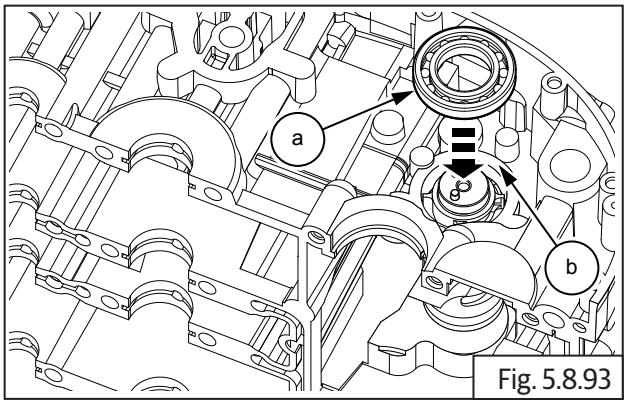

Fig. 5.8.93

- Gently tap on the bearing **(a)** to press fit with crankcase **(b)**.

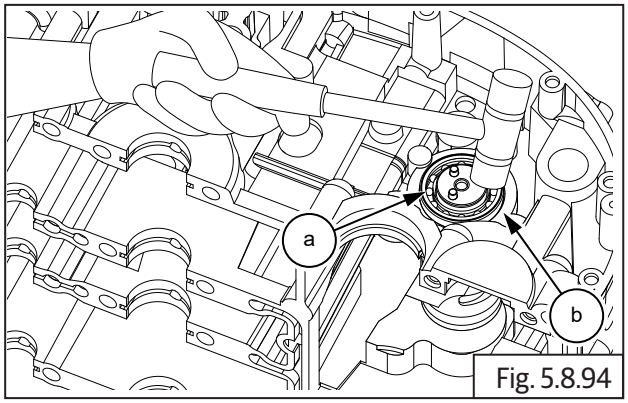

Fig. 5.8.94

	Plastic mallet

NOTE
• *Ensure there is free rotation of gear shift cam drum.*

5.8.8. Shifter fork

- Lubricate the 2 Nos. shifter fork spindles **(a)** and insert them into the lower crankcase from the RH side (Clutch side), till they are just protruding into the crankcase. **Do not insert them fully**.

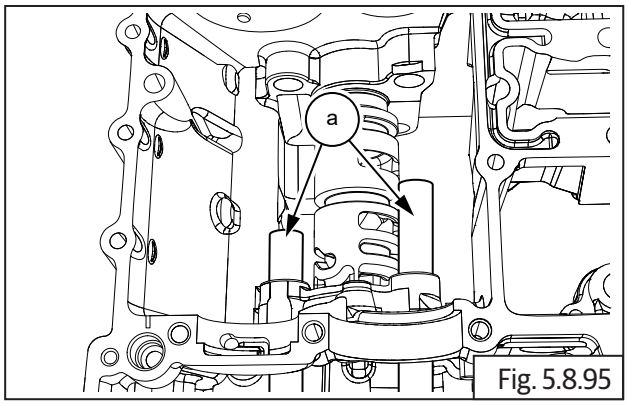

Fig. 5.8.95

- Lubricate and position shifter fork marked "4", inside lower crankcase duly ensuring the small peg **(a)** on the fork is aligned to the central groove in the gear shift drum.
- Ensure the forks **(a)** are facing upwards.

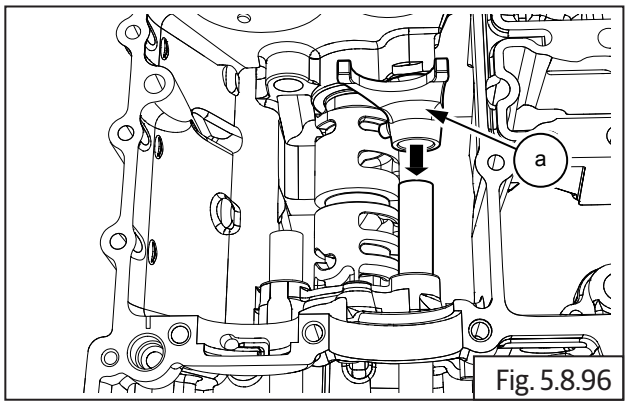

Fig. 5.8.96

- Ensure proper seating of the shifter fork peg in the groove in gear shift drum and press shifter fork spindle fully till it is seated into the boss in lower crankcase.

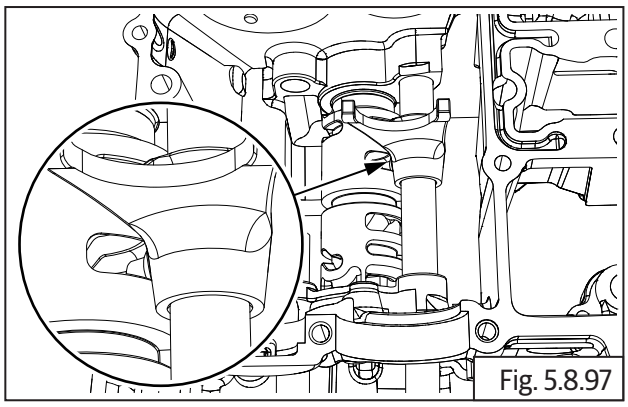
Fig. 5.8.97

- Lubricate and position shifter fork marked "5" inside lower crankcase duly ensuring the small peg **(a)** on the fork is aligned to the outer slot in the gear shift drum. Ensure the forks are facing upwards.

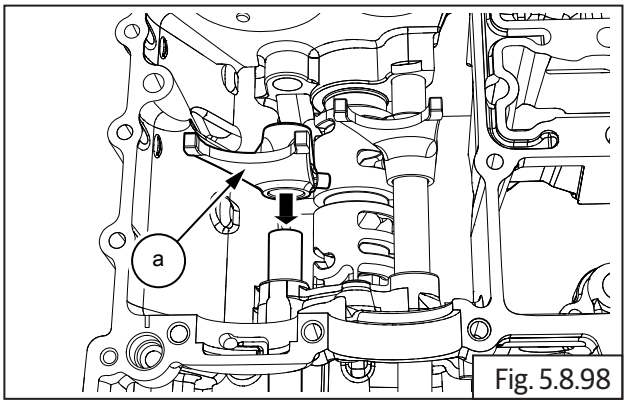

Fig. 5.8.98

- Ensure proper seating of the peg in gear shift drum and press the shifter fork spindle till it is protruding sufficiently outside shifter fork "5".

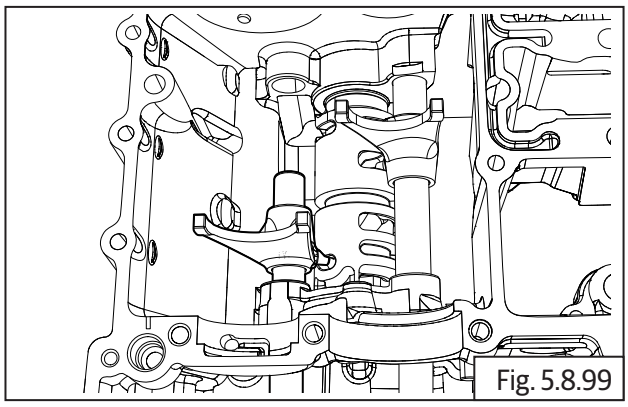
Fig. 5.8.99

- Lubricate and position shifter fork marked "6" inside lower crankcase duly ensuring the small peg **(a)** on the fork is aligned to the slot in the extreme end of the gear shift drum. Ensure the forks are facing upwards.

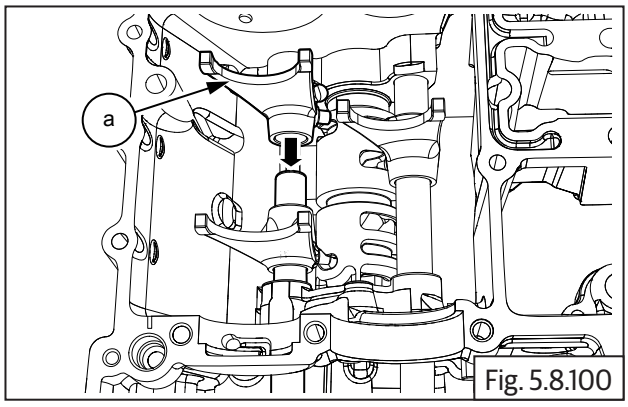

Fig. 5.8.100

- Ensure proper seating of the shifter fork pegs in the respective grooves in gear shift drum and press shifter fork spindle fully till it is seated into the boss in lower crankcase.

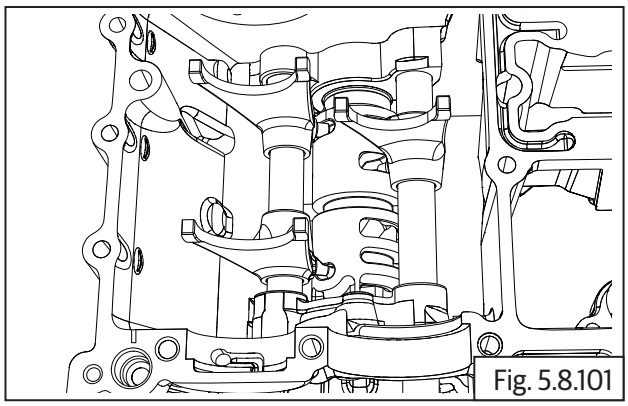
Fig. 5.8.101

- Gently rotate gear shift drum to ensure proper seating of the pegs of all the shifter forks in the respective grooves in gear shift drum.
- Check for free rotation of the gear shift drum and movement of gear shift forks on the spindles.
- Assemble bearing stopper plate **(a)** over the gear shift cam drum ball bearing on lower crankcase on the RH side (clutch side) and ensure the mounting holes are aligned.
- Locate 2 Nos. Hex socket head bolts **(M5) (b)** over the stopper plate and tighten to specified torque.

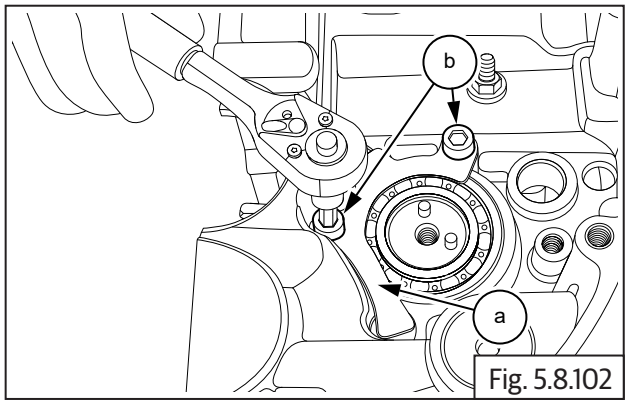

Fig. 5.8.102

	4 mm Allen Socket with Ratchet
Torque	10-12 N-m/1.0-1.2 kgf-m

- Assemble bearing **(a)** and oil seal **(b)** in lower crankcase **(c)** on the LH side (magneto side).

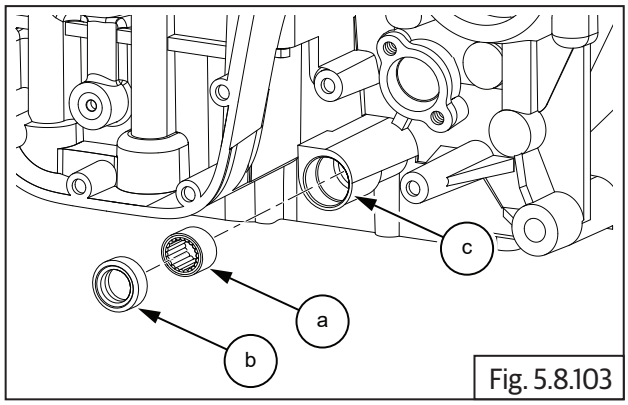

Fig. 5.8.103

5.8.9. Crankcases closing

- Support upper crankcase assembly firmly on suitable wedges with the mating surface facing up.

NOTE
• *Ensure the mating space both upper and lower crankcase are clean and dry.* • *Ensure chain pad is located in the slot in upper crankcase.*

- Apply recommended liquid gasket evenly, on the upper crankcase mating surface **(a)**.

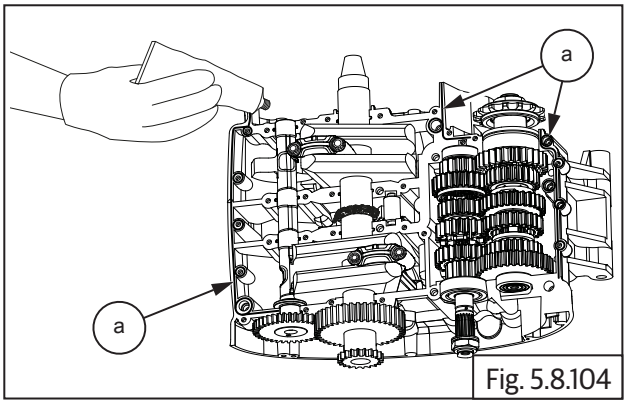

Fig. 5.8.104

- Ensure the 3 Nos. dowels **(a)** are located in the crankcase upper.
- Assemble lower crankcase over upper crankcase and ensure the following:
- The gear shifter forks are positoned in the respective grooves in the gears on mainshaft and Counter shaft (Rotate gear shifter drum to align the forks against the gears).

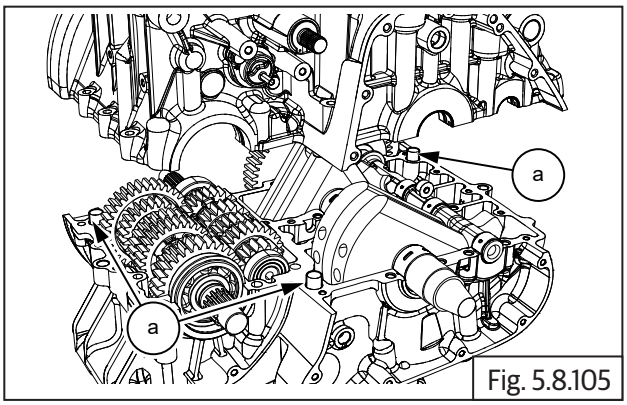

Fig. 5.8.105

Crankcase Bolts Tightening Sequence Procedure

Crankshaft & Balancer Shaft Main Bolts (Bolt No - 1 to 16) (M8x1.25)	
Lubrication	Apply Engine Oil to bolt threads and underhead are of the bolts
First Torque (As shown in the figure)	20 Nm
Additional Angle	As specified in the table below

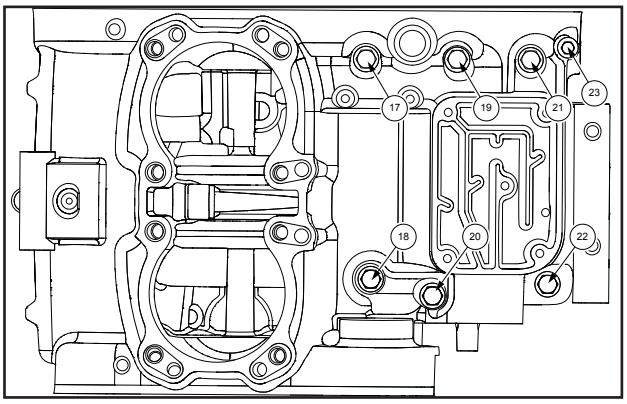

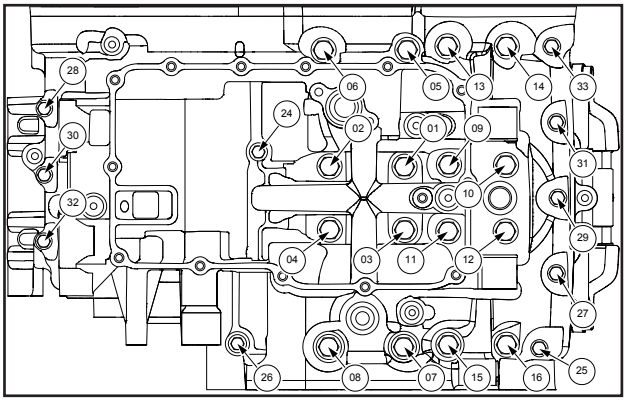

Torque Angle Values	
Bolt Number	**Angle**
1	40°
2	40°
3	40°
4	40°
5	75°
6	75°
7	60°
8	60°
9	40°
10	60°
11	40°
12	60°
13	60°
14	40°
15	40°
16	40°

Gear Box Bolts (Bolt no - 17 to 22) (M8x1.25)	
Lubrication	Apply Engine Oil to bolt threads and underhead are of the bolts
Torque (In order shown in the figure)	24-28 Nm

M6 Bolts (Bolt no - 23 to 33) (M8x1.0)	
Lubrication	N/A
Torque (In order shown in the figure)	9-12 Nm

- **A. Fasteners on Lower Crankcase**

Fasteners	Quantity
M8 x 1.25 x 80	9
M8 x 1.25 x 150	2
M8 x 1.25 x 120	5

NOTE
• Apply recommended engine oil on the bolt threads and underneath the head of the bolts before inserting into crankcase.

- Ensure lower crankcase is seated fully and uniformly on upper crankcase without any gaps.
- Locate 4 Nos. Hex flange bolts **M8 X 1.25 X 80 (a)** in the mounting holes inside oil sump area in lower crankcase and hand tighten just sufficiently in the sequence shown. **Do not TIGHTEN FULLY**.

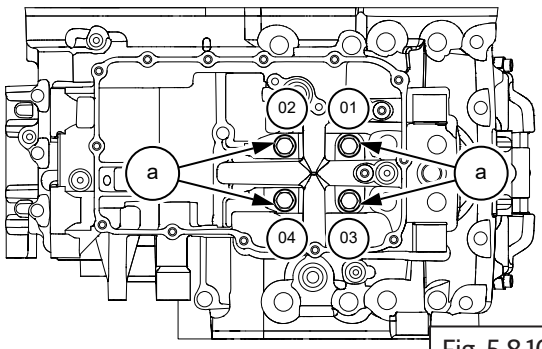

Fig. 5.8.106

	13 mm Socket with Ratchet
1st Torque	17 N-m/1.7 kgf-m
2nd Torque	40°

- Locate 2 Nos. Hex flange bolts **M8 X 1.25 X 150 (a)** in the mounting holes on the lower crankcase RH side (clutch side) and hand tighten just sufficiently in the sequence shown. **Do not TIGHTEN FULLY**.

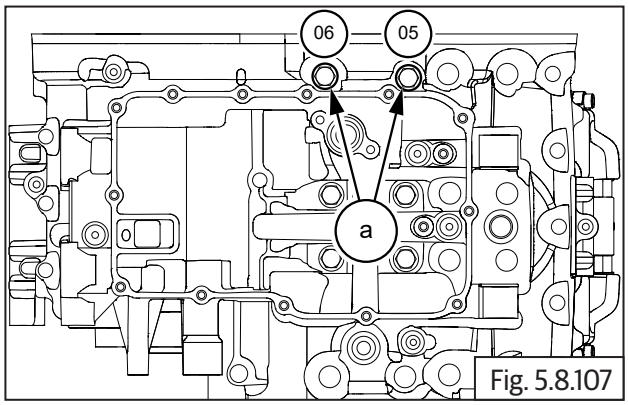

Fig. 5.8.107

	13 mm Socket with Ratchet

- Locate 2 Nos. Hex flange bolts **M8 X 1.25 X 120 (a)** in the mounting holes on the lower crankcase LH side (magneto side) and hand tighten just sufficiently in the sequence shown. **Do not TIGHTEN FULLY**.

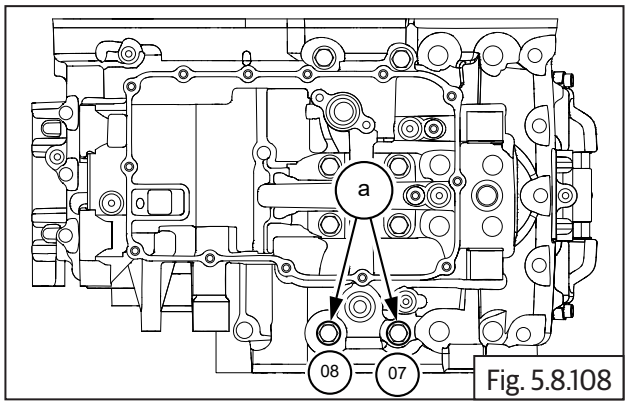

Fig. 5.8.108

	13 mm Socket with Ratchet

- Locate 1 No. Hex flange bolt **M8 X 1.25 X 80 (a)** in mounting hole inside oil sump area in lower crankcase and hand tighten just sufficiently. **Do not TIGHTEN FULLY.**

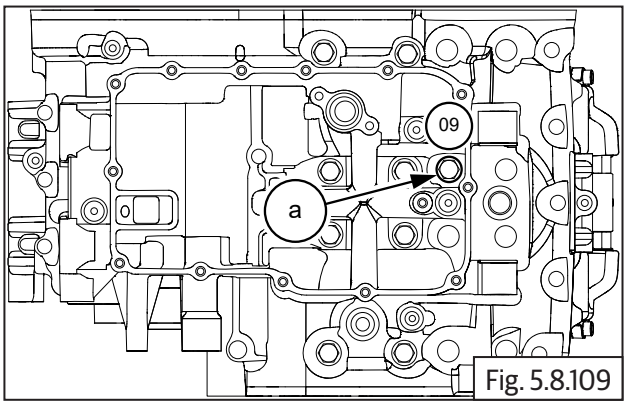

Fig. 5.8.109

	13 mm Socket with Ratchet

- Locate 1 No. Hex flange bolt **M8 X 1.25 X 120 (a)** in the hole in oil filter element area in lower crankcase front side and hand tighten just sufficiently. **Do not TIGHTEN FULLY**.

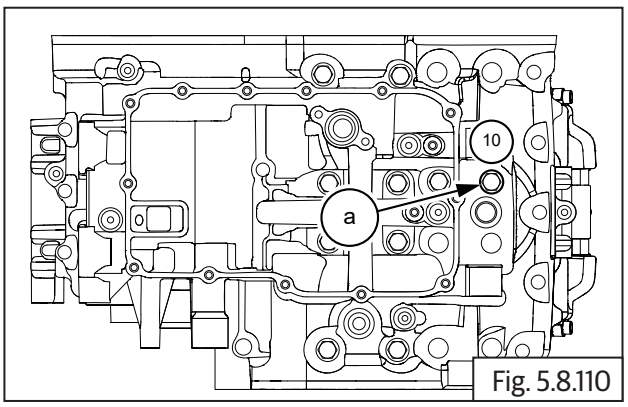

Fig. 5.8.110

	13 mm Socket with Ratchet

- Locate 1 No. Hex flange bolt **M8 X 1.25 X 80 (a)** in mounting hole inside oil sump area in lower crankcase and hand tighten just sufficiently. **Do not TIGHTEN FULLY.**

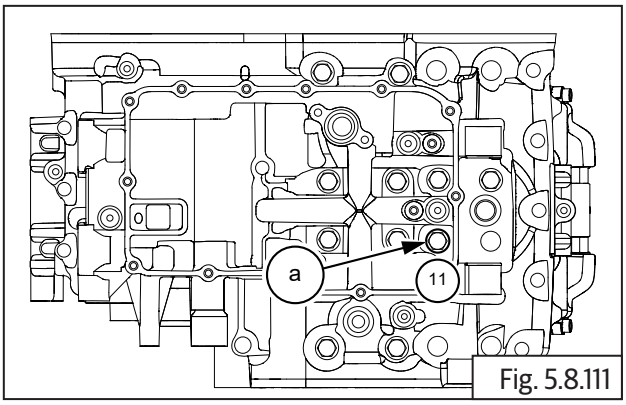

Fig. 5.8.111

	13 mm Socket with Ratchet

- Locate 1 No. Hex flange bolt **M8 X 1.25 X 120 (a)** in the hole in oil filter element area in lower crankcase front side and hand tighten just sufficiently. **Do not TIGHTEN FULLY.**

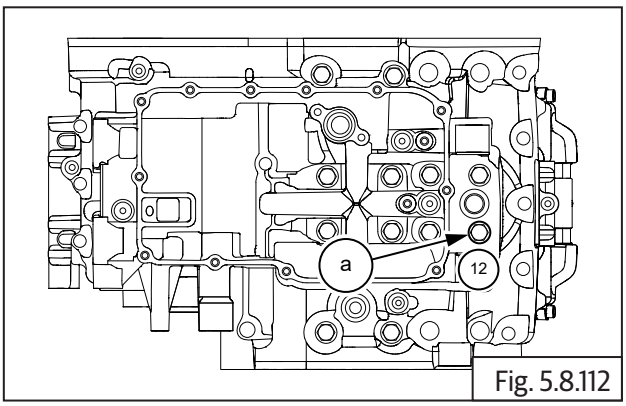

Fig. 5.8.112

	13 mm Socket with Ratchet

- Locate 1 No. Hex flange bolt **M8 X 1.25 X 120 (a)** in the mounting hole on the lower crankcase RH side (clutch side) and hand tighten just sufficiently. **Do not TIGHTEN FULLY**.

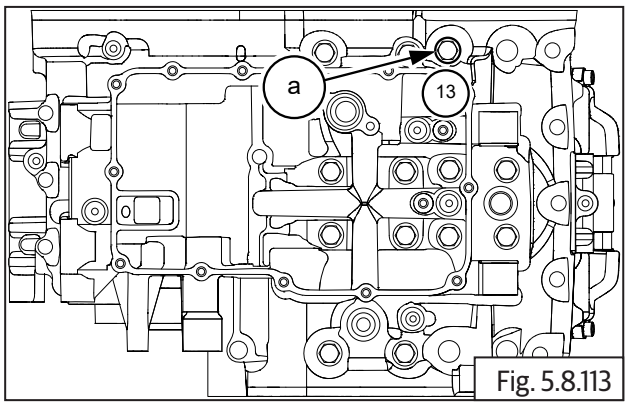

Fig. 5.8.113

	13 mm Socket with Ratchet

- Locate 1 No. Hex flange bolt **M8 X 1.25 X 80 (a)** in the mounting hole on the lower crankcase RH side (clutch side) and hand tighten just sufficiently. **Do not TIGHTEN FULLY**.

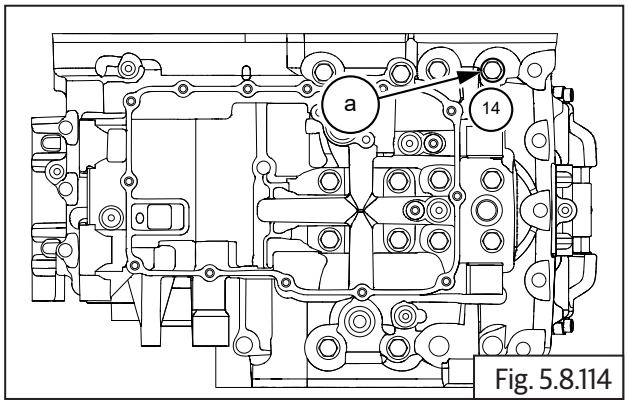

Fig. 5.8.114

	13 mm Socket with Ratchet

- Locate 2 Nos. Hex flange bolts **M8 X 1.25 X 80 (a)** in the mounting holes on the lower crankcase LH side (magneto side) and hand tighten just sufficiently. **Do not TIGHTEN FULLY**.

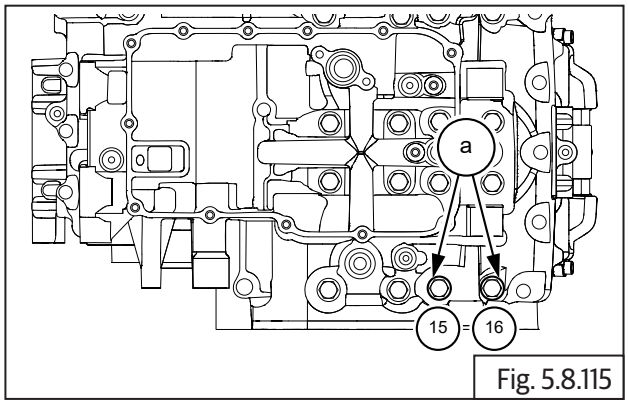

Fig. 5.8.115

	13 mm Socket with Ratchet

- Tighten the 16 Nos. Hex flange bolts **M8 X 1.25**, as mentioned in the sequence below.

  Initially the bolts are first torqued evenly.

  Subsequently a second torque is applied evenly.

  Finally angle torqued as specified below.

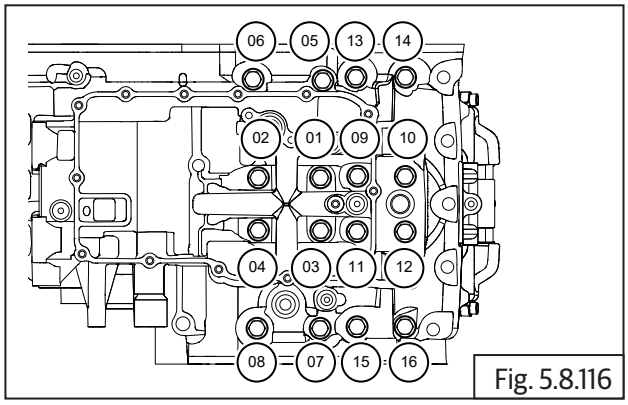

Fig. 5.8.116

	13 mm Socket with Ratchet
1st Torque	10 N-m/1 kgf-m

Bolt Location	Torque degrees
1 - 2 - 3 - 4 - 9 - 11 - 14 - 15 - 16	40° (deg)
7 - 8 - 10 - 12 - 13	60° (deg)
5 - 6	75° (deg)

- **B. Fasteners on upper Crankcase**

Fasteners	Quantity
M8 x 1.25 x 105	2
M8 x 1.25 x 45	1
M8 x 1.25 x 80	3
M6 x 1.25 x 35	1

- Gently invert the crankcase assembly such that the lower crankcase is resting firmly on suitable wedges.
- Locate 1 No. Hex flange bolt **M8 X 1.25 X 105 (a)** before oil filler hole area in upper crankcase RH side (clutch side) and hand tighten just sufficiently. **Do not TIGHTEN FULLY**.

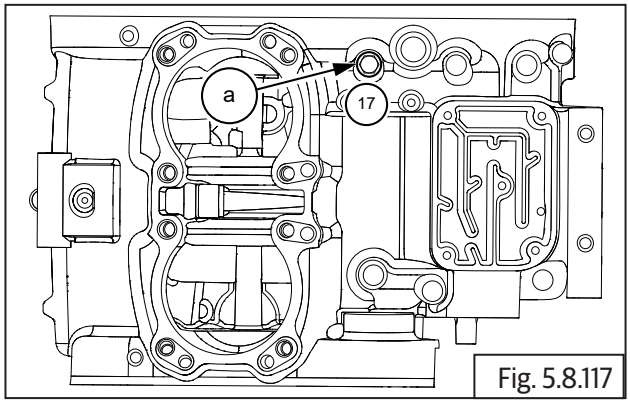

Fig. 5.8.117

	13 mm Socket with Ratchet

- Locate 1 No. Hex flange bolt **M8 X 1.25 X 45 (a)** in the front mounting hole in the starter motor recess in upper crankcase LH side (magneto side) and hand tighten just sufficiently. **Do not TIGHTEN FULLY.**

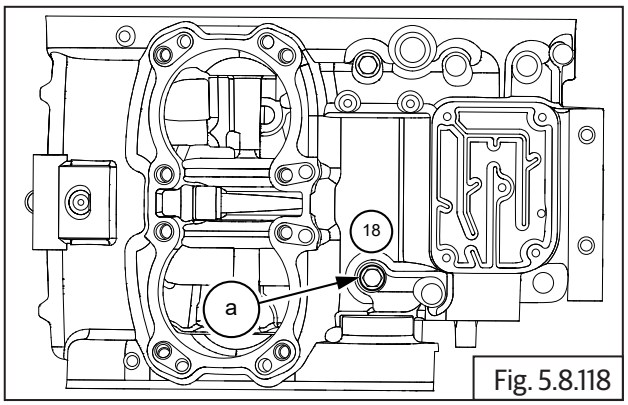

Fig. 5.8.118

	13 mm Socket with Ratchet

- Locate 1 No. Hex flange bolt **M8 X 1.25 X 105 (a)** behind oil filler hole area in upper crankcase RH side (clutch side) and hand tighten just sufficiently. **Do not TIGHTEN FULLY**.

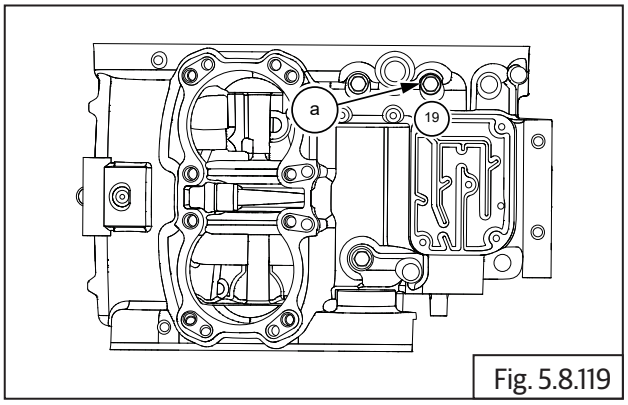

Fig. 5.8.119

	13mm Socket with Ratchet

- Locate 1 No. Hex flange bolt **M8 X 1.25 X 80 (a)** in the rear mounting hole in the starter motor recess in upper crankcase LH side (magneto side) and hand tighten just sufficiently. **Do not TIGHTEN FULLY**.

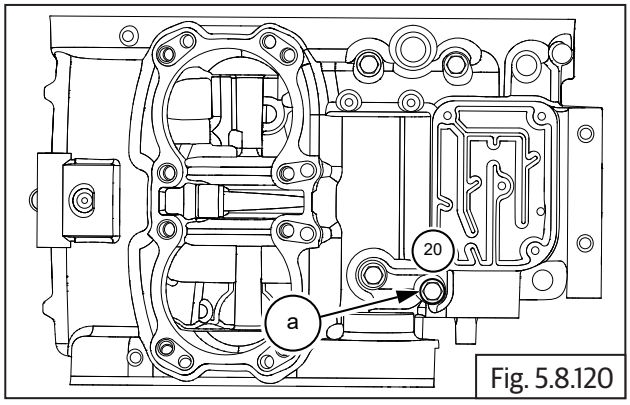

Fig. 5.8.120

	13 mm Socket with Ratchet

- Locate 2 Nos. Hex flange bolt **M8 X 1.25 X 80 (a)** on the LH and RH sides of the breather box housing assembly in the rear end of upper crankcase and hand tighten just sufficiently. **Do not TIGHTEN FULLY.**

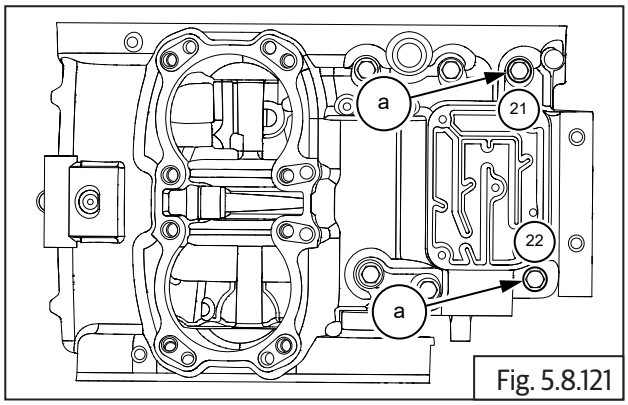

Fig. 5.8.121

	13 mm Socket with Ratchet

- Locate 1 No. Hex flange bolt **M6 X 1 X 35 (a)** at the rear end of upper crankcase RH side (Clutch side) and hand tighten just sufficiently. **Do not TIGHTEN FULLY.**

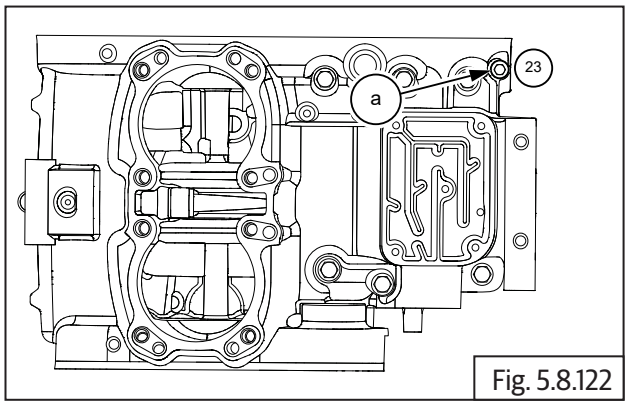

Fig. 5.8.122

	8 mm Socket with Ratchet

- Tighten the 7 Nos. Hex flange bolts on upper crankcase as mentioned in the sequence detailed below, to the specified torques.

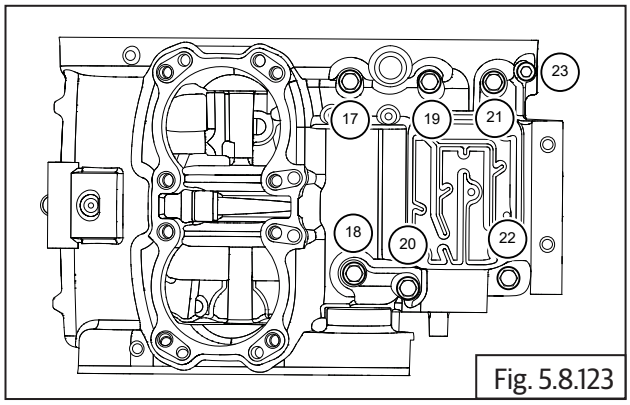

Fig. 5.8.123

Bolt Location	Size	Torque Value
17-22	13mm Socket & Torque wrench	24-28 Nm (2.4-2.8 Kgf-m)
23	8 mm Socket & Torque wrench	9-12 Nm (0.9-1.2 Kgf-m)

- **C. Fasteners on Lower Crankcase**

Fasteners	Quantity
M6 x 1.25 x 85	1
M6 x 1.25 x 35	8
M6 x 1.25 x 55	1

- Gently invert the crankcase assembly such that the upper crankcase is resting firmly on suitable wedges.
- Locate 1 No. Hex flange bolt **M6 X 1 X 85 (a)** in mounting hole inside oil sump area in lower crankcase and hand tighten just sufficiently. **Do not TIGHTEN FULLY**.

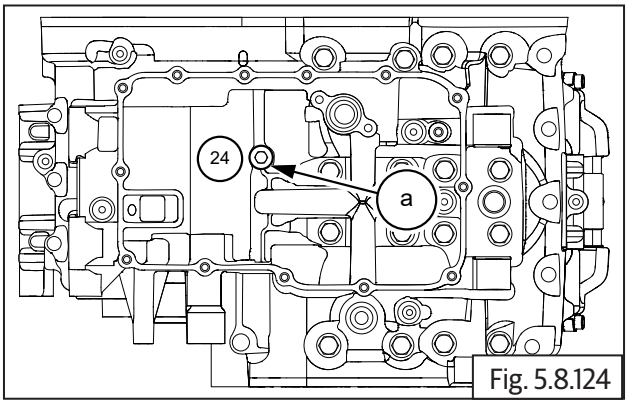

Fig. 5.8.124

	8 mm Socket with Ratchet

- Locate 1 No. Hex flange bolt **M6 X 1 X 35 (a)** in mounting hole the front LH side (magneto side) in lower crankcase and hand tighten just sufficiently. **Do not TIGHTEN FULLY**.

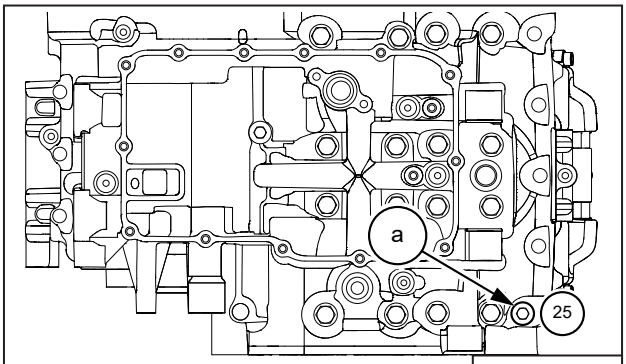

Fig. 5.8.125

	8 mm Socket with Ratchet

- Locate 1 No. Hex flange bolt **M6 X 1 X 55 (a)** in mounting hole on the LH side , behind magneto housing, in lower crankcase and hand tighten just sufficiently. **Do not TIGHTEN FULLY**.

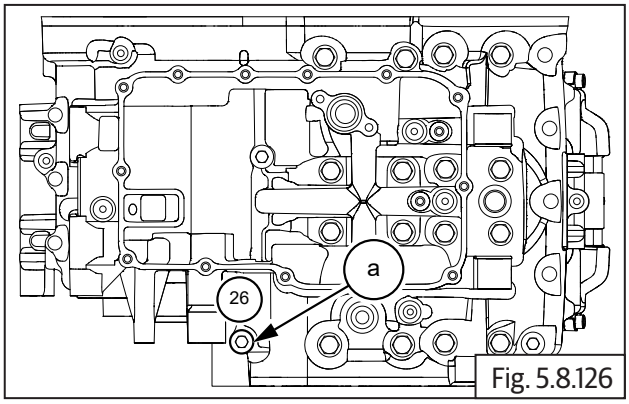

Fig. 5.8.126

	8 mm Socket with Ratchet

- Locate 7 Nos. Hex flange bolts **M6 X 1 X 35 (a)** 4 Nos. bolts in the front mounting holes and 3 Nos. bolts in the rear mounting holes in lower crankcase and hand tighten just sufficiently. **Do not TIGHTEN FULLY**.

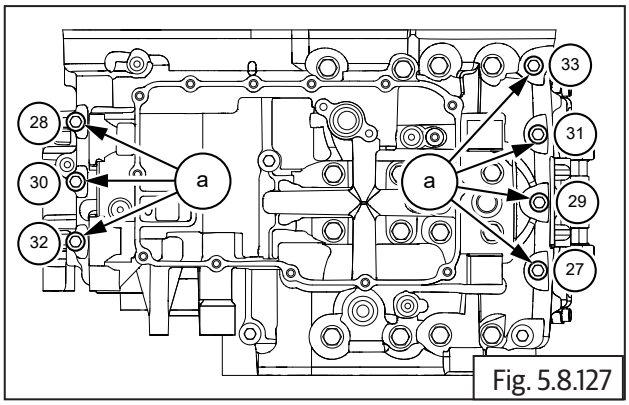

Fig. 5.8.127

	8 mm Socket with Ratchet

- Tighten the 10 Nos. Hex flange bolts , as mentioned in the sequence below,

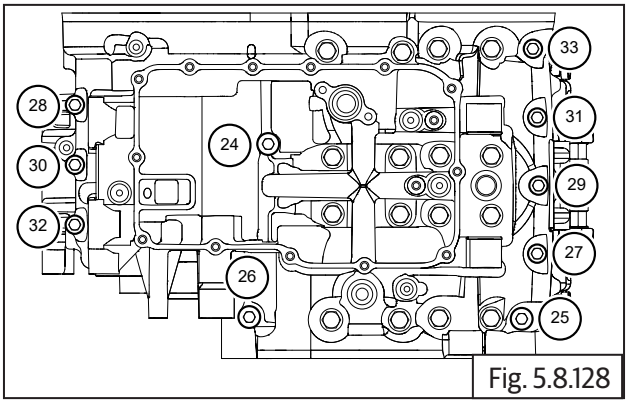

Fig. 5.8.128

	8mm Socket with Torque wrench
1st Torque	9 - 12 N-m/0.9 - 1.2 kgf-m

5.8.10. Oil Pressure Switch

- Assemble oil pressure switch **(a)** along with washer **(b)** on crankcase. **Do not TIGHTEN FULLY**.

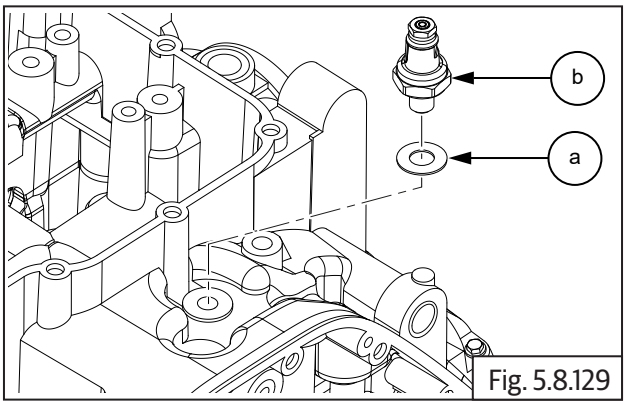

Fig. 5.8.129

- Tighten oil pressure switch **(a)** to specified torque.

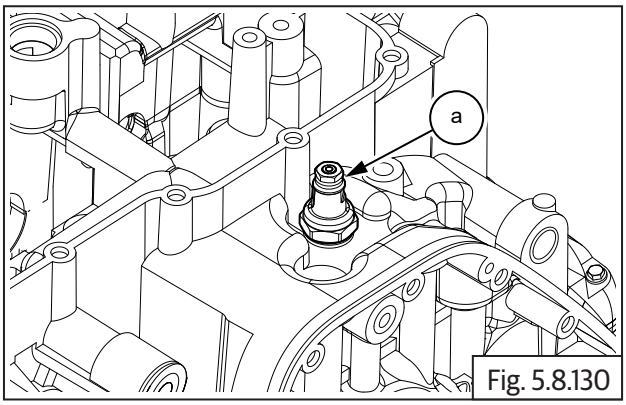

Fig. 5.8.130

	21 mm Socket with Torque Wrench
Torque	8-10 N-m/0.8-1.0 kgf-m

NOTE
• *Apply Loctite 542 on the threads of Oil Pressure Switch before installing*
• *Replace washer whenever the oil pressure switch is removed.* **DO NOT** *reuse.*

5.8.11. Oil Bypass

- Install O-rings **(a)** in both ends of the bypass pipe.
- Install oil bypass pipe **(b)** into lower crankcase oil gallery.

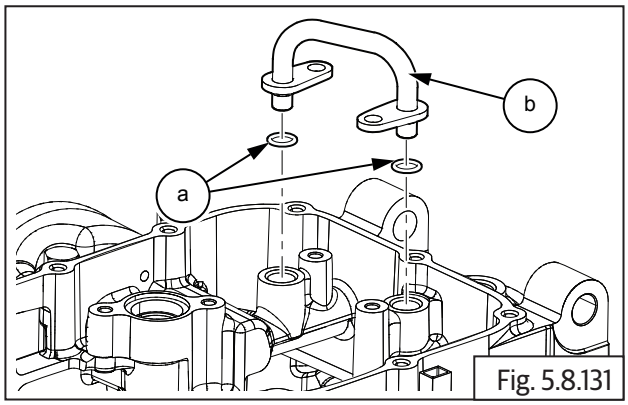

Fig. 5.8.131

NOTE
• *Replace O - Rings whenever the Bypass Pipe is removed.* **DO NOT** *reuse.*

- Tighten 2 Nos. Hex socket head screw **(M6) (a)** to specified torque.

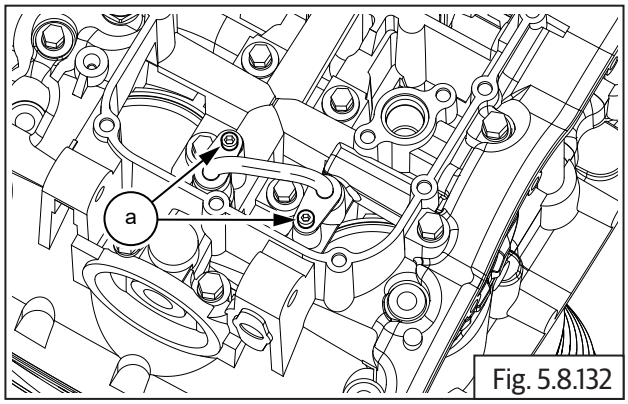

Fig. 5.8.132

	5 mm Allen socket with Ratchet
Torque	10-12 N-m/1.0-1.2 kgf-m

5.8.12. Oil Strainer

- Ensure O-ring is located properly on strainer.
- Install oil strainer **(a)** into lower crankcase oil gallery and tighten with 2 Nos. Hex flange head bolts **(M6) (b)** to specified torque.

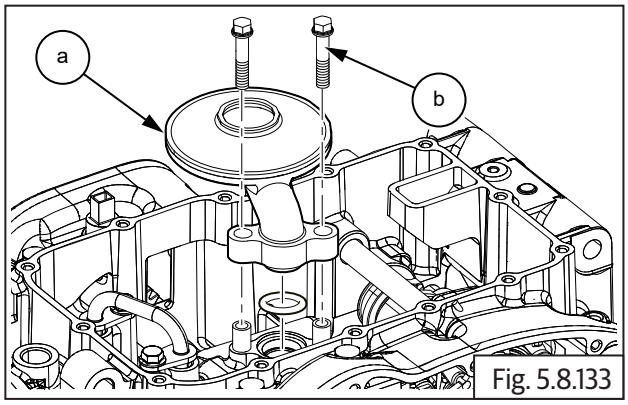

Fig. 5.8.133

	10 mm Socket with Ratchet
Torque	10-12 N-m/1.0-1.2 kgf-m

5.8.13. Oil Pan

- Locate oil pan gasket **(a)** on crankcase and assemble oil pan **(b)**.

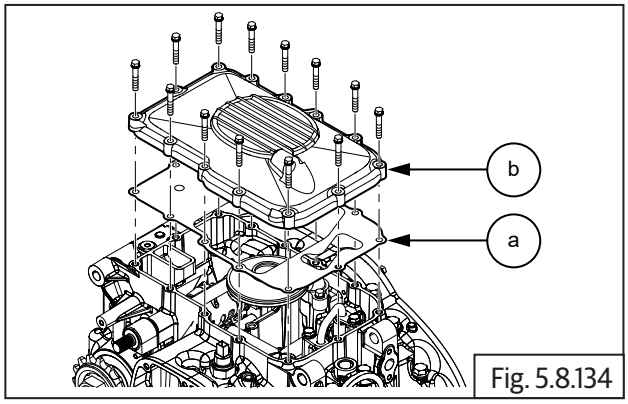

Fig. 5.8.134

- Assemble and tighten 13 Nos. Hex flange head bolts **(M6) (a)** in crisscross pattern to specified torque.

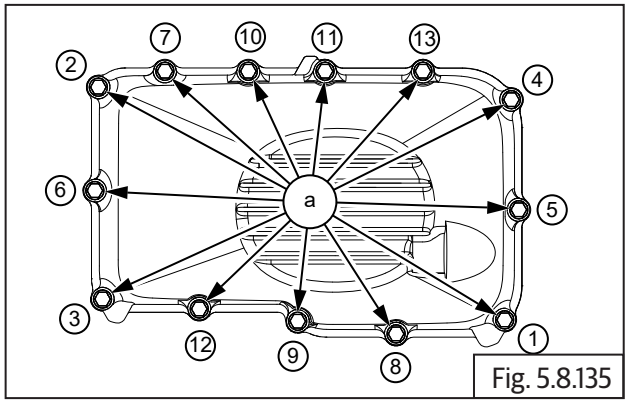

Fig. 5.8.135

	10 mm Socket with Ratchet
Torque	10-12 N-m/10-1.2 kgf-m

NOTE
• *Rotate the crankcase so that the connecting rods are facing upwards for further assembly.*
• *Support timing chain suitably to ensure it does not fall into the crankcase while rotating.*

5.8.14. Drain Plug

- Assemble magnetic drain plug **(a)** along with washer **(b)**.

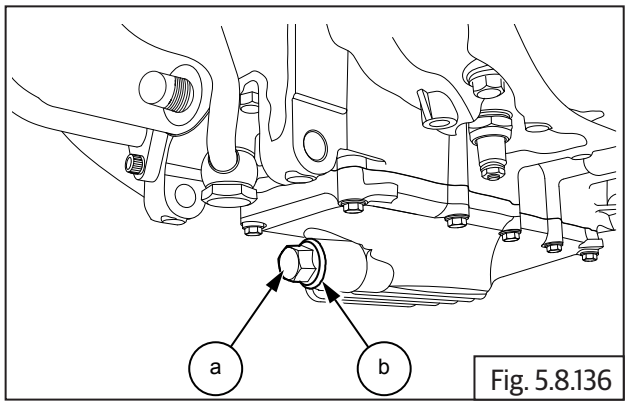

Fig. 5.8.136

- Tighten drain plug **(a)** to specified torque.

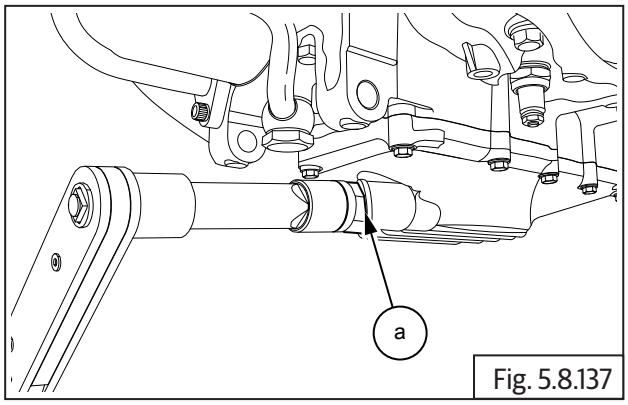

Fig. 5.8.137

	13 mm Socket with Ratchet and Torque wrench
Torque	33-37 N-m/3.3-3.7 kgf-m

NOTE
• *Apply Loctite 542 on the threads of Drain plug before installing*

5.8.15. Pistons and Rings

NOTE
• *Rings should be assembled with proper orientation (top marking should be always towards 1st ring end gap should be 45° before "EX" mark on piston crown).*
• *Middle 2nd ring end gap should be 180° from 1st ring end gap.*
• *Oil ring 3rd top rail end gap should be 180° from 2nd ring end gap (45° before "EX" on piston crown).*
• *Oil ring spacer end gap should be 45° before 3rd ring top rail end gap (90° before "EX" on piston crown).*
• *Oil ring (3rd) bottom rail end gap should be 180° from 3rd ring top rail end gap.*
• *One of the circlip should be assembled on the inner side of piston.*

Piston Rings

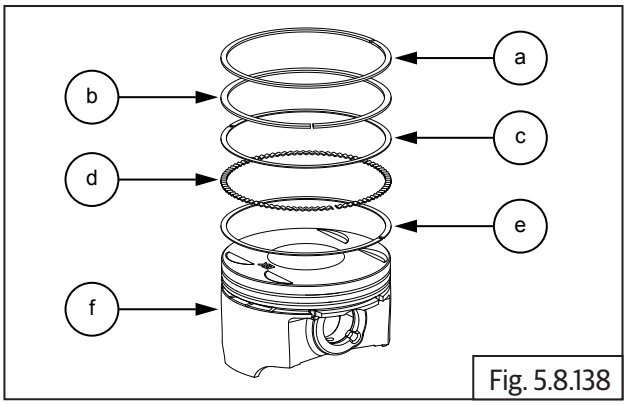

Fig. 5.8.138

a	Top ring
b	Second ring
c	Oil ring top rail
d	Oil ring spacer
e	Oil ring bottom rail
f	Piston

Orientation Pattern

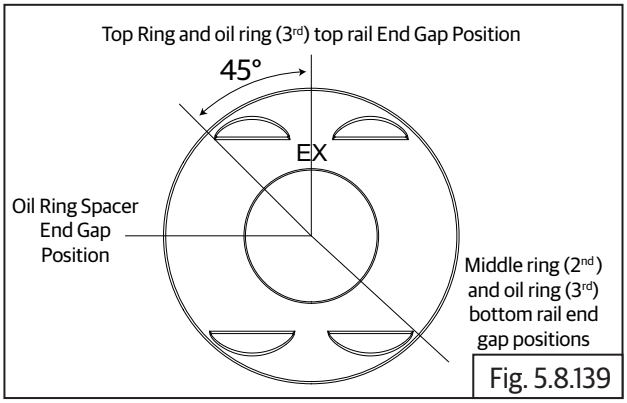

Fig. 5.8.139

- Top ring (1st) and oil ring (3rd) top rail end gap positions.

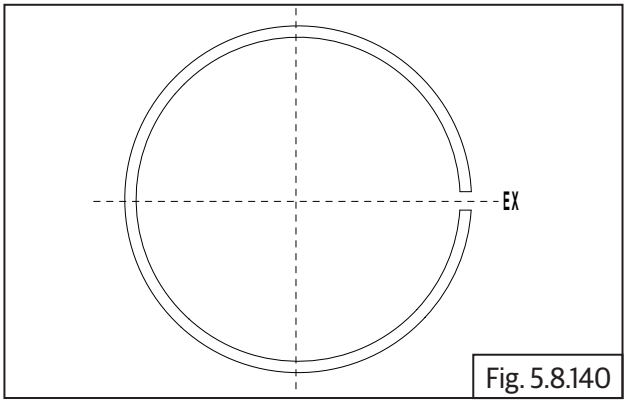

Fig. 5.8.140

- Middle (2nd) ring and oil ring (3rd) bottom rail end gap positions.

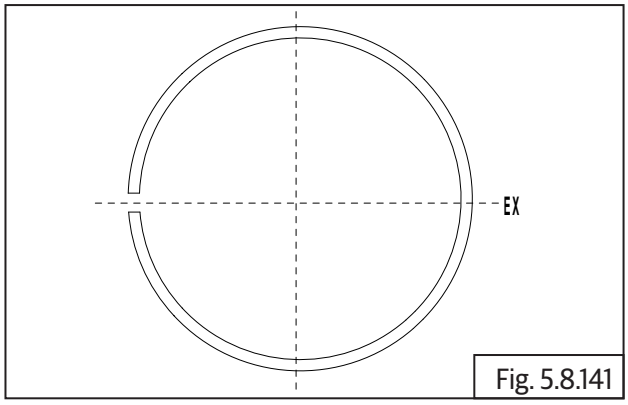

Fig. 5.8.141

- Oil ring spacer end gap position .

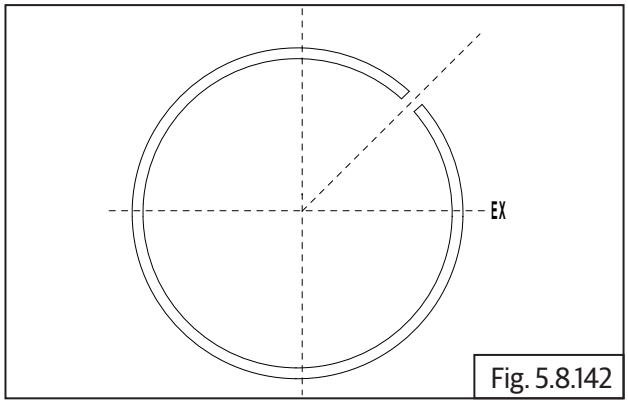

Fig. 5.8.142

5.8.16. Cylinder Barrel Dowels on Crankcase

- Install 2 Nos. dowel pins **(a)** and **(b)** on upper crankcase.

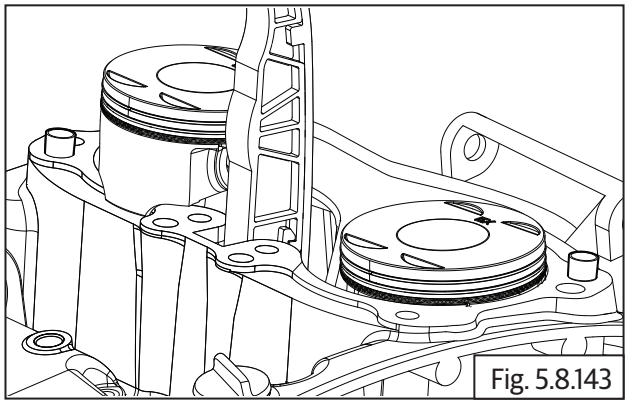
Fig. 5.8.143

5.8.17. Cylinder Barrel Gasket on Crankcase

- Ensure the gasket seating area in crankcase is clean.
- Ensure cam chain is routed through a new cylinder base gasket **(a)** and locate the gasket on crankcase **(b)**.
- Ensure proper seating of the gasket on the dowels on the crankcase.

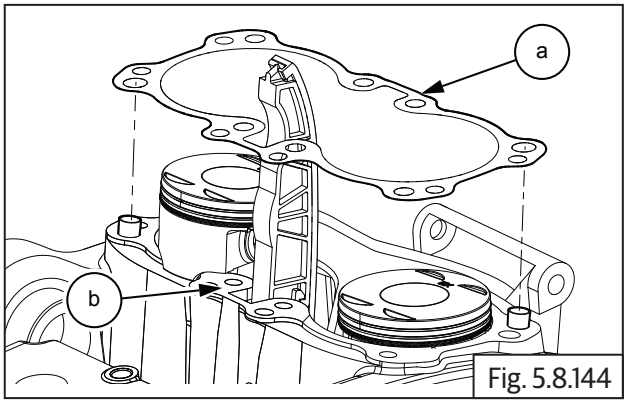

Fig. 5.8.144

5.8.18. Piston LH in Cylinder Barrel

- Ensure piston LH is at its top most position by rotating crankshaft clockwise.
- Locate special tool **(a)** on piston LH.

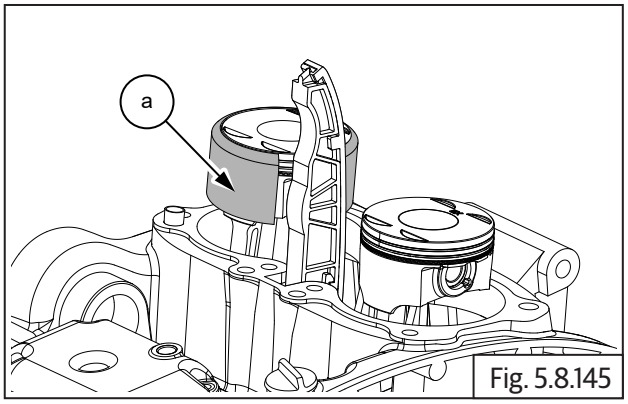

Fig. 5.8.145

SPL 	Part No: ST30296/a
	Part Name: Piston ring compressor

- Position and hold cylinder barrel above crankcase, route cam chain through cylinder barrel bottom and ensure it is supported firmly and suitably at the top.
- Ensure cylinder barrel LH is well lubricated, LH piston is held firmly and straight.

- Gently lower cylinder barrel **(a)** over the special tool piston LH, till the piston is halfway into the cylinder barrel.

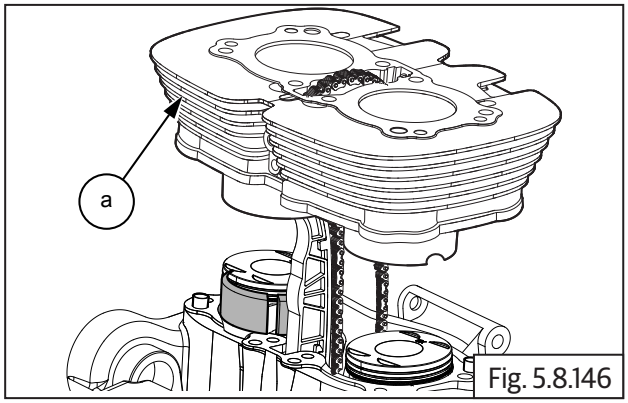

Fig. 5.8.146

- Hold cylinder barrel firmly in suspended position and remove the special tool **(a)** from piston LH.

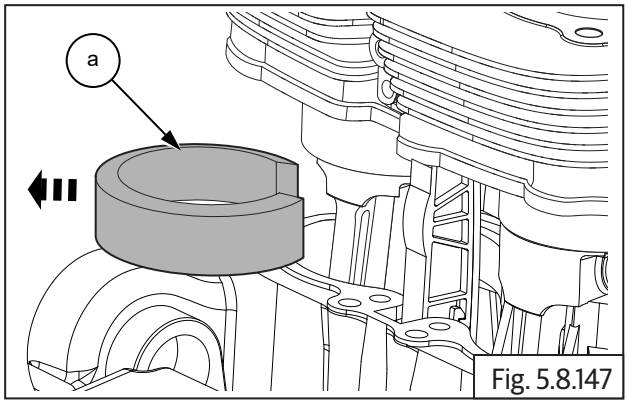

Fig. 5.8.147

SPL 	Part No: ST30296/a
	Part Name: Piston ring compressor

5.8.19. Piston RH in Cylinder Barrel

- Ensure cylinder barrel RH is well lubricated, RH piston is at its top most position, held firmly and straight.
- Locate special tool over piston RH.

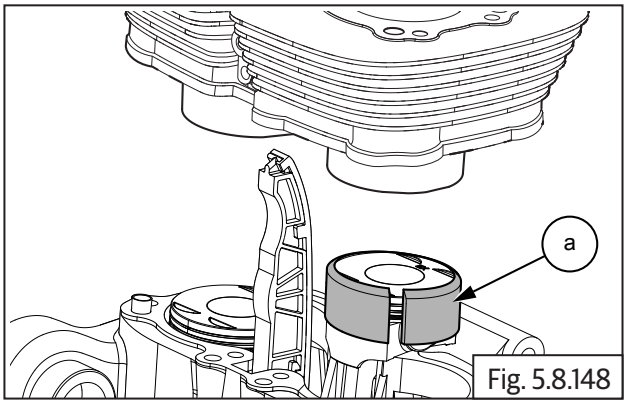

Fig. 5.8.148

SPL 	Part No: ST30296/a
	Part Name: Piston ring compressor

- Gently lower cylinder barrel **(a)** till piston RH is halfway into the cylinder barrel.

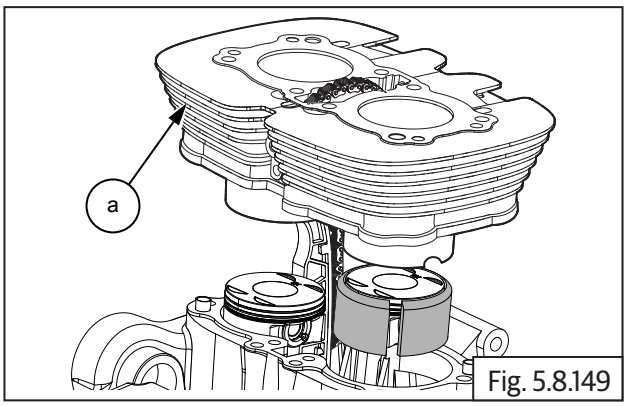

Fig. 5.8.149

- Hold cylinder barrel firmly in suspended position and remove the special tool **(a)** from piston RH.

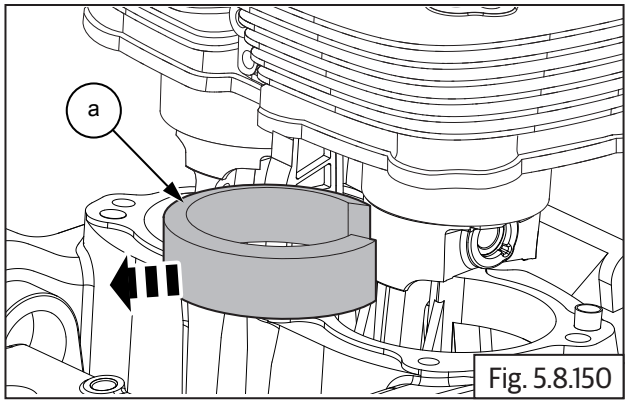

Fig. 5.8.150

SPL 	Part No: ST30296/a
	Part Name: Piston ring compressor

- Gently lower cylinder barrel further, till it is firmly seated on the crankcase.
- Locate 2 Nos. dowel pins **(a)** on cylinder barrel and ensure they are seated properly.

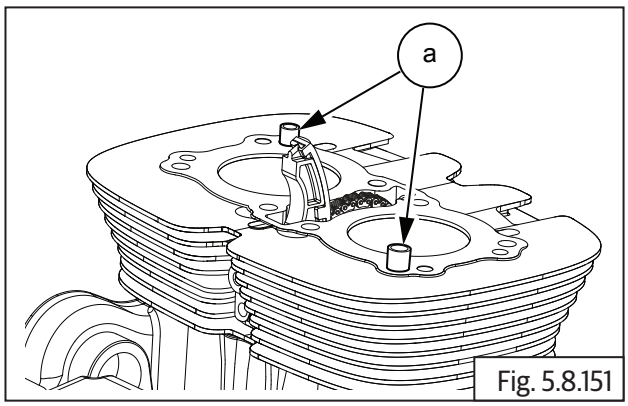

Fig. 5.8.151

5.8.20. Cylinder Head Gasket on Cylinder Barrel

- Ensure the gasket seating surface on cylinder barrel is clean.
- Ensure cam chain is routed through a new cylinder head gasket.
- Locate new head gasket **(a)** on cylinder barrel and ensure it is properly seated on the dowel pins and cylinder barrel.

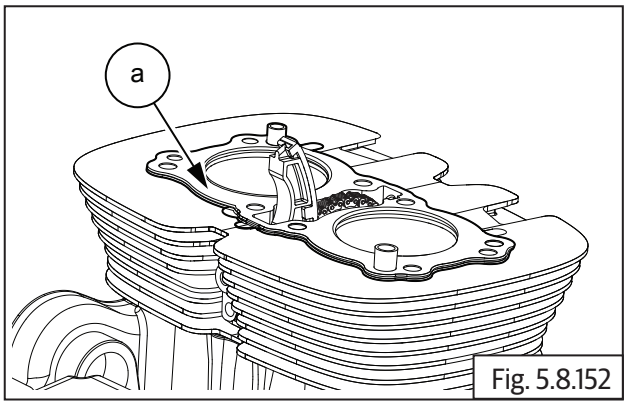

Fig. 5.8.152

5.8.21. Floating Chain Pad

- Hold timing chain **(a)** suitably and insert chain pad **(b)** into cylinder barrel with the chain contact area facing inside.

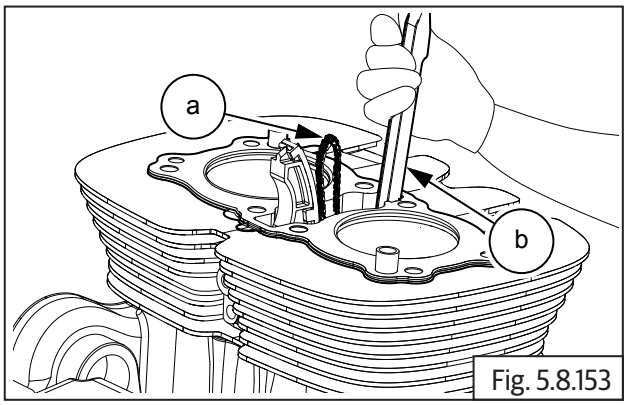

Fig. 5.8.153

⚠ CAUTION

Ensure floating chain pad seating correctly in the crankcase and free radial movement.

Components in Cylinder Head

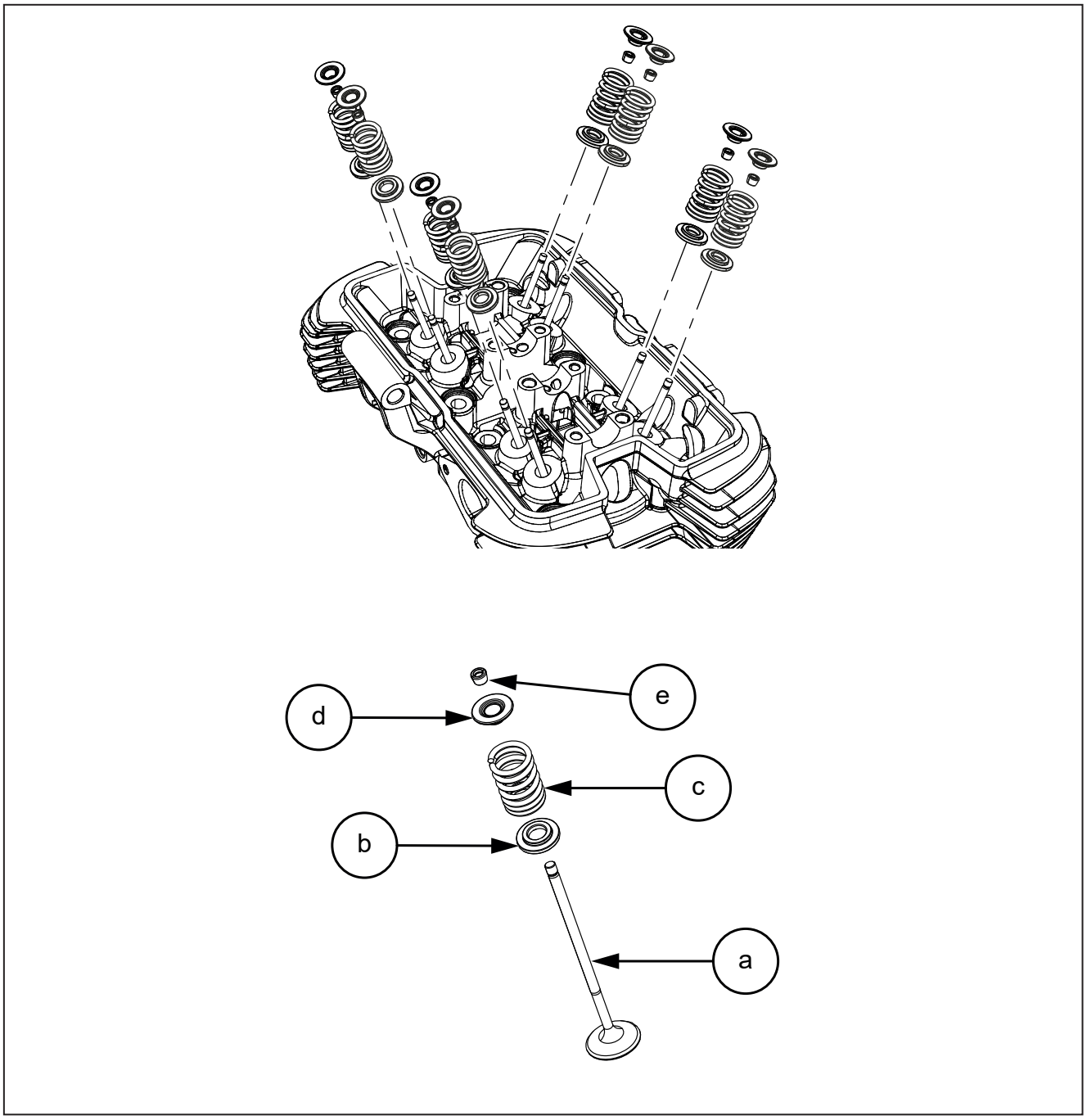

Item No.	Description	Quantity
a	Valve Stem	1
b	Spring Seat	1
c	Valve Spring	1
d	Retainer	1
e	Cotter	1

5.8.22. Components in Cylinder Head

Valves and Springs

- Install 8 Nos. valve stem seals **(b)** on the 8 Nos. valve guides **(a)**.

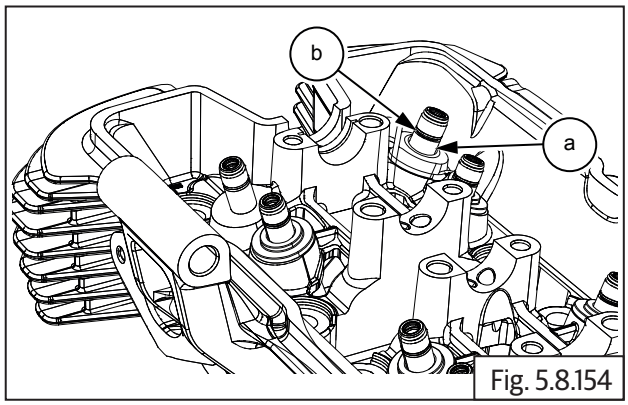

Fig. 5.8.154

- Lubricate and insert the valves **(a)** into the valve guides inside cylinder head **(b)**.

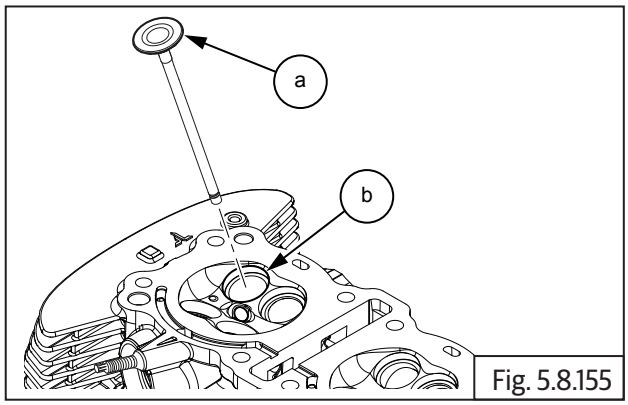

Fig. 5.8.155

- Support the valve inside cylinder head and assemble valve spring seat **(c).** Place the spring **(a)** over valve stem **(b)** in the outer area of the cylinder head.

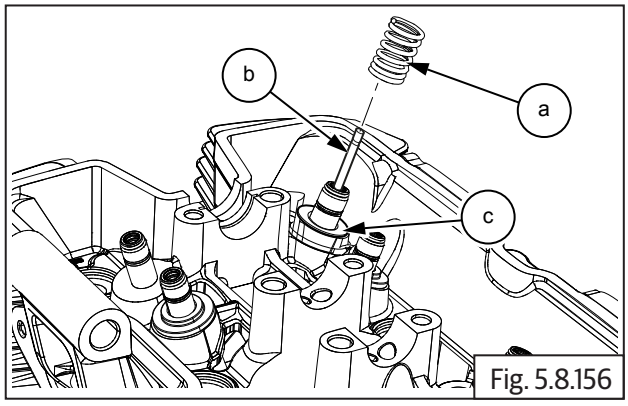

Fig. 5.8.156

- Insert collar **(a)** above valve spring **(b)**.

⚠ CAUTION

Ensure the marked position in spring (a) is facing downwards while assembling.

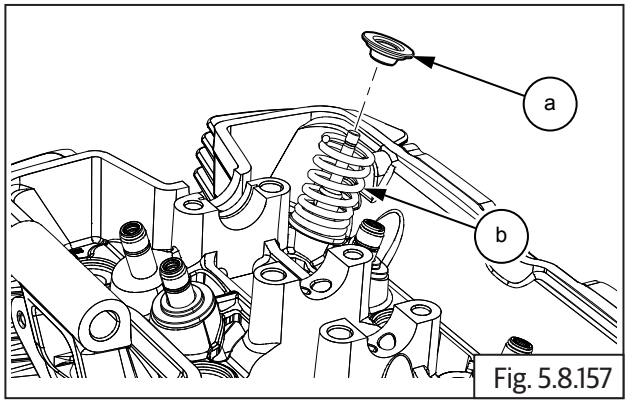

Fig. 5.8.157

- Locate special tool on the valve such that the threaded screw end of the tool is seated centrally on the valve inside the cylinder head and the other end is seated on the valve spring retainer on the outer side of the cylinder head.
- Compress valve spring with special tool **(a)** by "hand tightening" the threaded screw of the special tool gently, till it locks against the valve**.**

⚠ CAUTION

Do not overtighten the special tool as it will damage both the valve seating surface and the special tool.

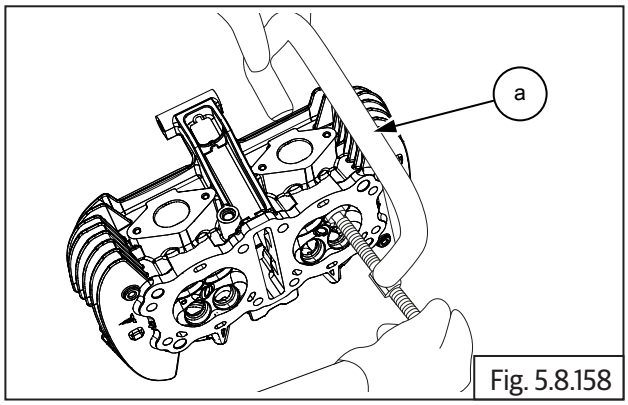

Fig. 5.8.158

SPL 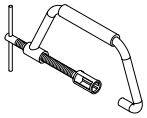	Part No: ST-27528-2
	Part Name: Valve spring compressor

- Locate two split cotters **(a)** on the retainer with their tapered end facing inside and the flat edges seated against the valve stem top portion.

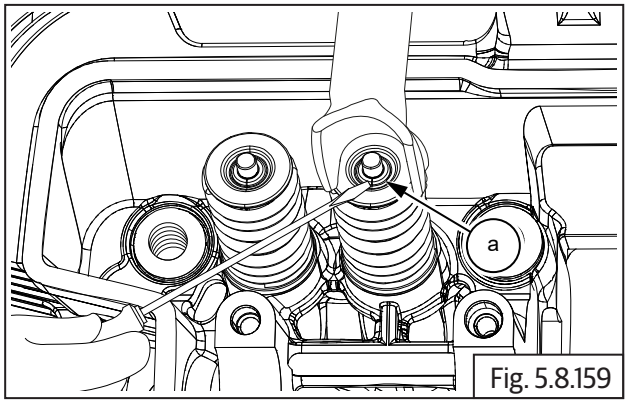

Fig. 5.8.159

SPL 	Part No: ST-27528-2
	Part Name: Valve spring compressor

- Gently and slowly release special tool by unscrewing the threaded shaft, duly ensuring the valve cotters are locked in place on the valve stem and the tapered surfaces of the cotters are inside the valve spring retainer.
- Remove special tool **(a)** from the valve.

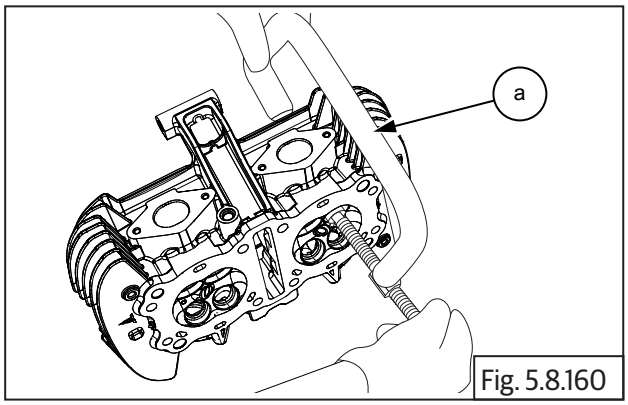

Fig. 5.8.160

- Repeat the above process to install the other seven valves, springs, retainers and cotters on the cylinder head.

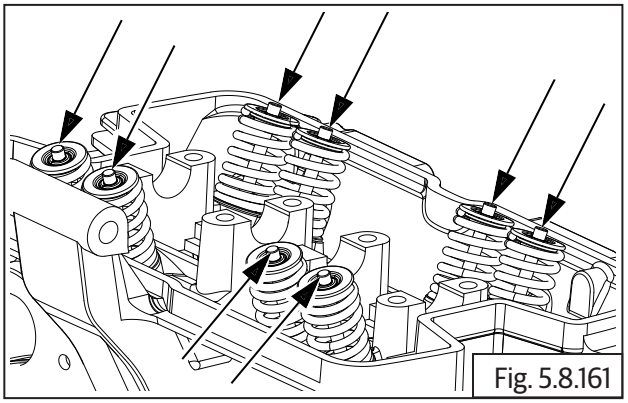
Fig. 5.8.161

5.8.23. Cylinder Head on Cylinder Barrel

Cylinder head assembly on cylinder barrel

- Position cylinder head over the barrel such that the exhaust ports are facing towards the front and inlet ports are towards the rear of the engine.
- Ensure the 2 Nos. dowels **(a)** and cylinder head gasket are located on the cylinder barrel.
- Ensure the cam chain pads are positioned correctly and route the cam chain from the lower side of the cylinder head to the top.
- Support cam chain suitably to prevent it from falling into cylinder head.

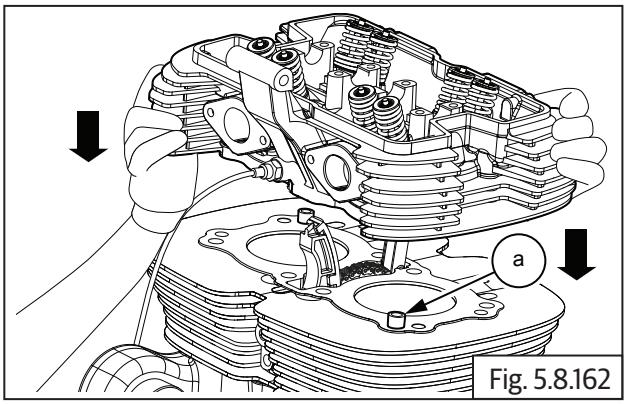

Fig. 5.8.162

⚠ CAUTION

Cylinders bolts and washers are one time ise only. Do not reuse.

- Locate new 8 Nos. Hex flange head bolts **(M10) (a)** along with washers on the cylinder head.

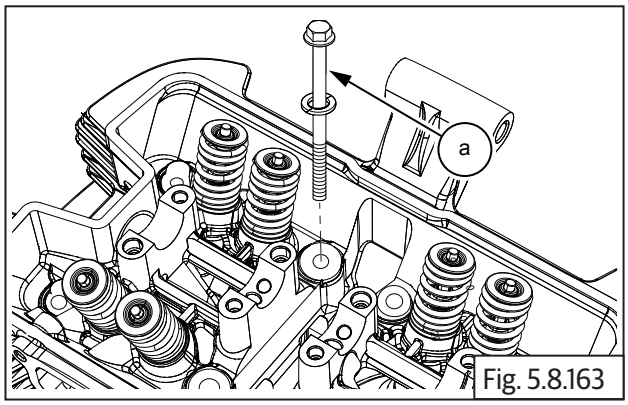

Fig. 5.8.163

	12 mm Socket with Ratchet

- Tighten the cylinder head bolts in a crisscross pattern to the initial 1st torque values FIRST and then to the 2nd torque values as specified below.

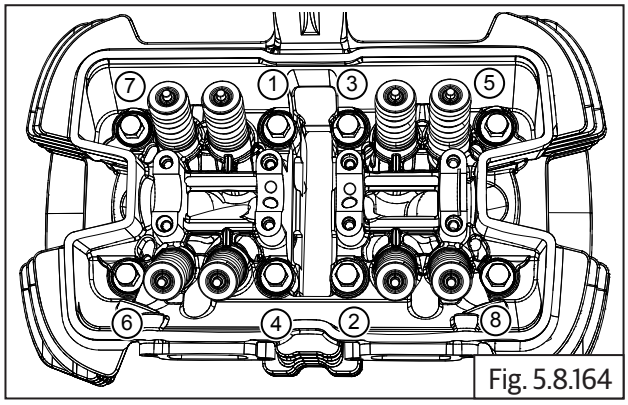

Fig. 5.8.164

- Finally tighten each of the cylinder head bolts using an angular torque wrench, to the specified angular torque value given below and in the same crisscross pattern detailed above.

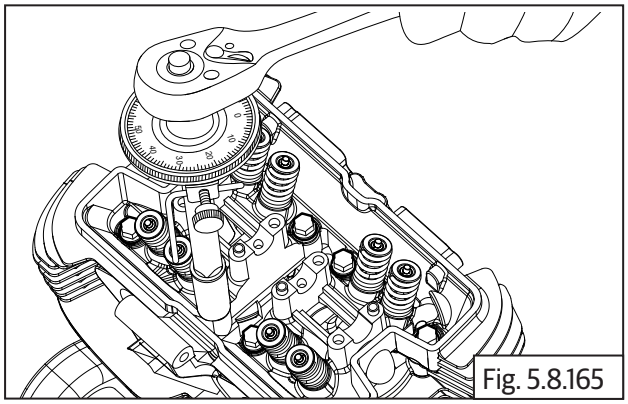
Fig. 5.8.165

	14 mm Socket with Angle wrench
1st Torque	15 N-m/1.5 kgf-m
2nd Torque	35 N-m/3.5 kgf-m
Angular Torque	150° (deg)

⚠ CAUTION

Torque and angle should be as specified. Do not provide over-torque as it will damage the bolts.

5.8.24. Starter Clutch to Magneto Rotor

- Lubricate starter clutch **(d)** and assemble into outer ring **(c)** with the collar seating in the groove in the outer ring.
- Position outer ring on magneto rotor such that the collar of the starter clutch is facing magneto rotor.
- Ensure mounting holes are aligned, insert 6 Nos. Hex socket head screws **(M6) (a)** into magneto rotor **(b)** and tighten outer ring **(c)** to rotor to specified torque.

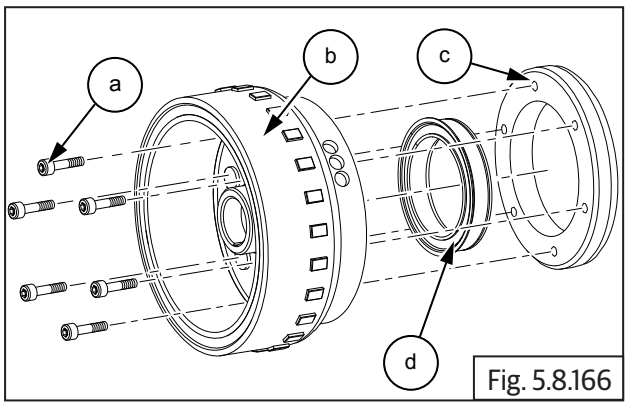

Fig. 5.8.166

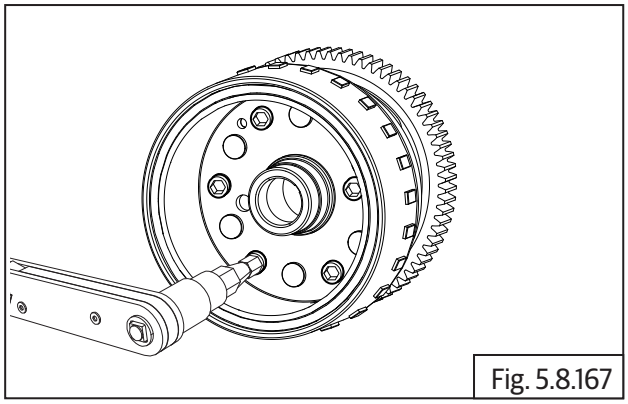

Fig. 5.8.167

	5 mm Allen socket with Torque wrench
Torque	10 N-m/1 kgf-m

NOTE
• *Apply Loctite 243 on the threads of Magneto Rotor bolts* **(a)** *before installing*

5.8.25. Woodruf Key on Crankshaft

- Assemble woodruff key **(a)** on crankshaft and ensure it is facing upwards by rotating crankshaft.

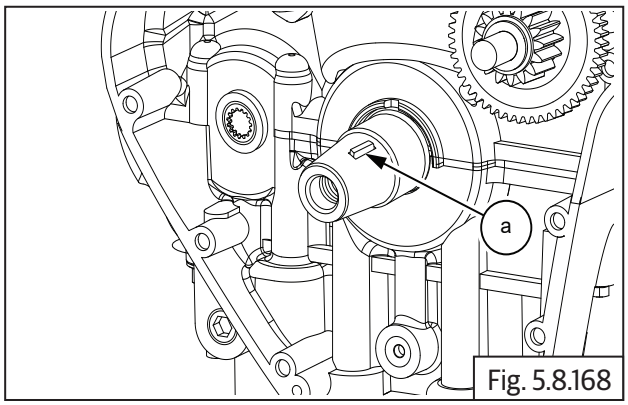

Fig. 5.8.168

5.8.26. Magneto Rotor on Crankcase

- Position gear starter clutch with the collar facing outside.
- Insert gear starter clutch **(a)** into magneto rotor **(b)** and rotate anti-clockwise to lock the gear starter clutch into magneto rotor.

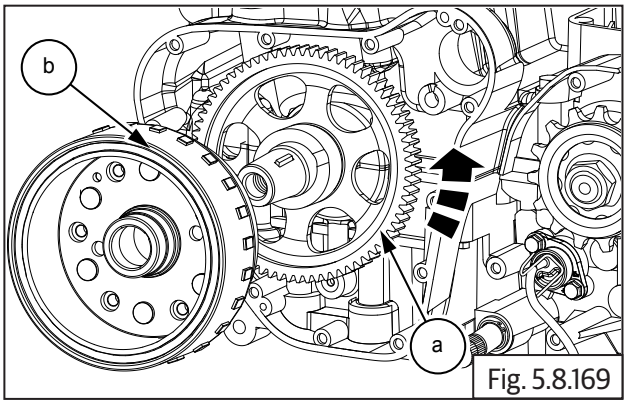

Fig. 5.8.169

- Locate magneto rotor **(a)** on crankshaft duly ensuring the slot in the rotor is positioned correctly on woodruff key.

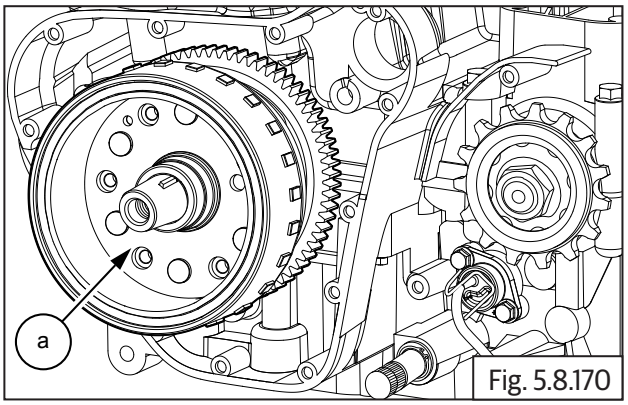

Fig. 5.8.170

- Position idle gear **(a)** against crankcase with smaller gear facing outside and insert idle gear spindle into boss in crankcase.

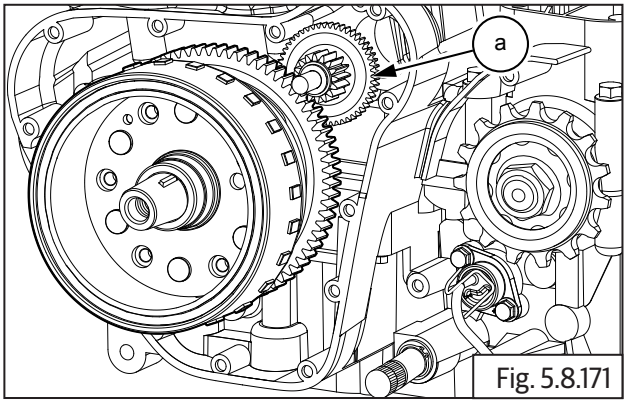

Fig. 5.8.171

- Locate and assemble Hex flange bolt **(M12) (a)** with washer on magneto rotor and tighten bolt just sufficiently.

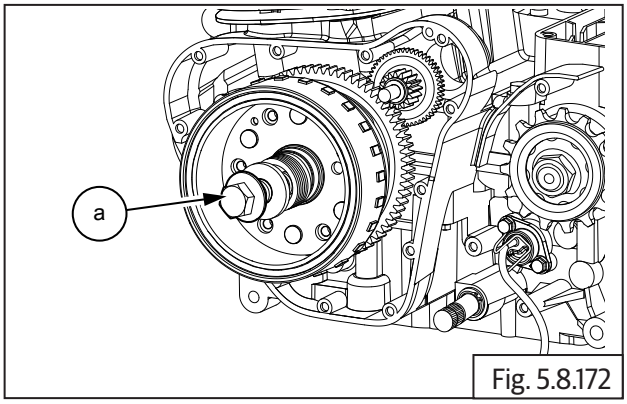

Fig. 5.8.172

- In order to tighten magneto rotor bolt, place special tool **(a)** in crankcase RH between the gears to lock the crankshaft and prevent rotation.
- Ensure LH piston is at TDC on compression stroke before locating special tool inside crankcase RH.

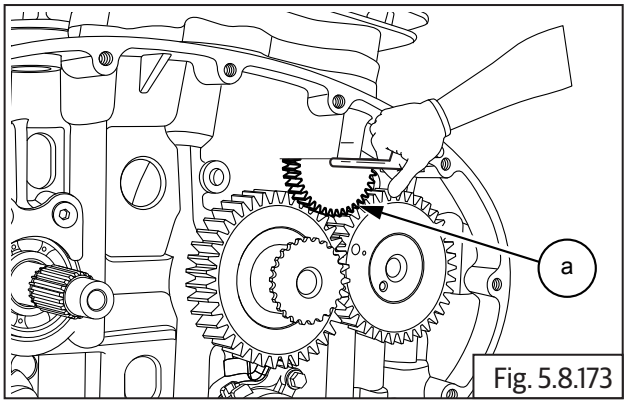

Fig. 5.8.173

SPL 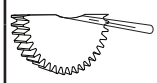	Part No: ST-27533-2
	Part Name: Crank Gears Locking Tool

	17 mm Socket with Ratchet and Torque wrench
Torque	153-157 N-m/15.3 -15.7kgf-m

- Remove special tool from crankcase RH side after tightening magneto rotor bolt.

5.8.27. Camshaft Sub-Assembly

- Check for CAM type, If type 1 is present follow procedure 1, if type 2 is present follow procedure 2.
- Type - 1 (Follow Procedure 1)

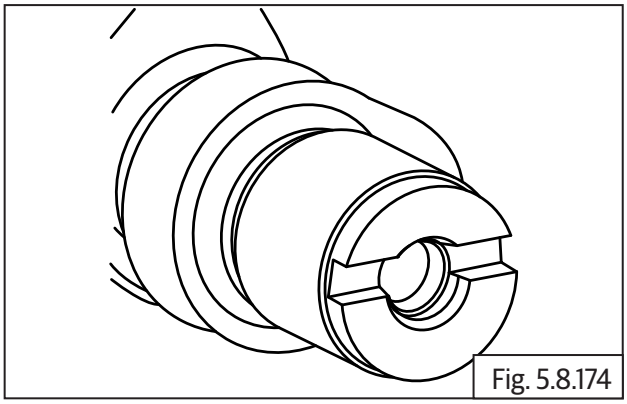
Fig. 5.8.174

- Type - 2 (Follow Procedure 2)

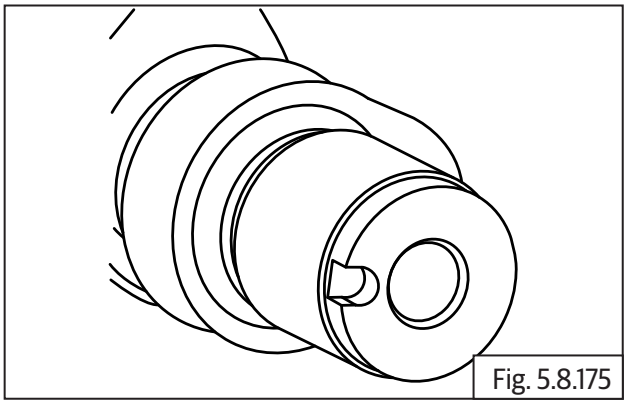
Fig. 5.8.175

Procedure 1

- Hold the timing chain in stretched condition and gently rotate crankshaft anti-clockwise to bring LH piston to TDC.

NOTE
• *Insert special tool in crankcase RH to lock the crankshaft from rotating.*

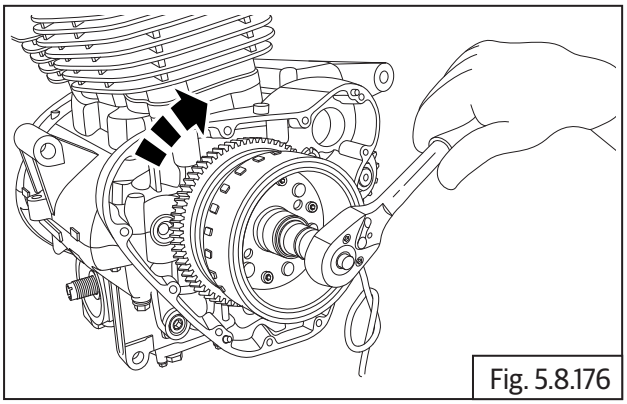

Fig. 5.8.176

	17 mm Socket with Ratchet

⚠ **CAUTION**
Do not rotate crankshaft clockwise.

- Hold sprocket in position with one of the slotted holes facing on top.

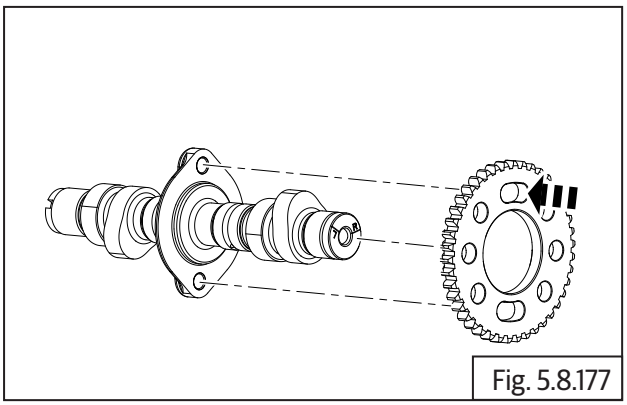

Fig. 5.8.177

- Assemble cam chain **(a)** on sprocket and locate camshaft **(b)** into sprocket from the RH side.
- Locate and install C washer **(c)** on the cylinder head.

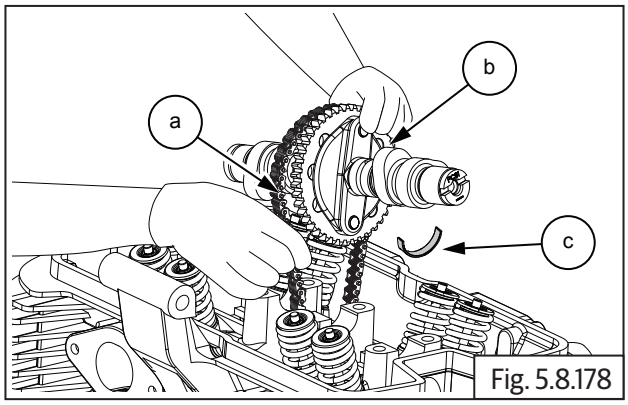

Fig. 5.8.178

- Ensure reference mark "L" in the camshaft is aligned to the cylinder head on LH side.

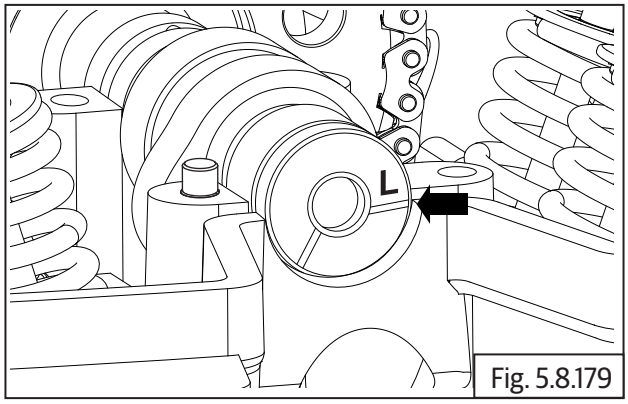

Fig. 5.8.179

- Locate timing chain sprocket on camshaft with its mounting slot centralised to the threads in the camshaft.
- Align Cam TDC plate behind camshaft in locked condition**.**

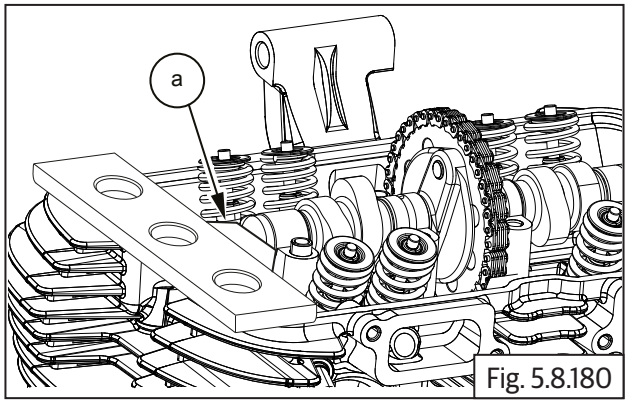

Fig. 5.8.180

- Locate and tighten Hex head bolt **(M8) (a)** sufficiently on timing chain sprocket. **Do not TIGHTEN FULLY.**

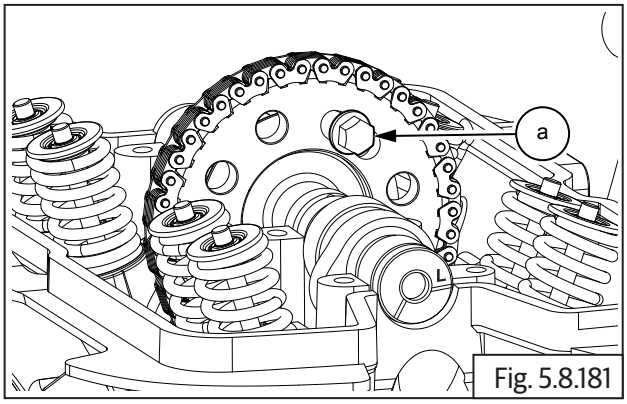

Fig. 5.8.181

	12 mm Socket with Torque wrench

- Remove the special tool from the camshaft on RH side.
- Rotate magneto **(a)** till another slotted hole on cam chain sprocket is at top most position. Ensure reference mark "R" aligned to the cylinder head.

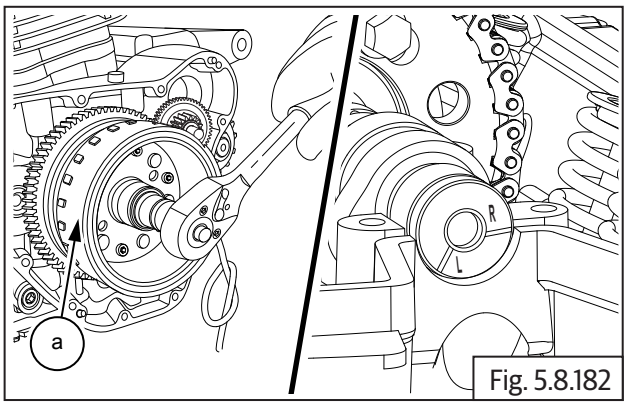

Fig. 5.8.182

	17 mm Socket with Ratchet

- Tighten Hex head bolt **(M8) (a)** to specified torque.

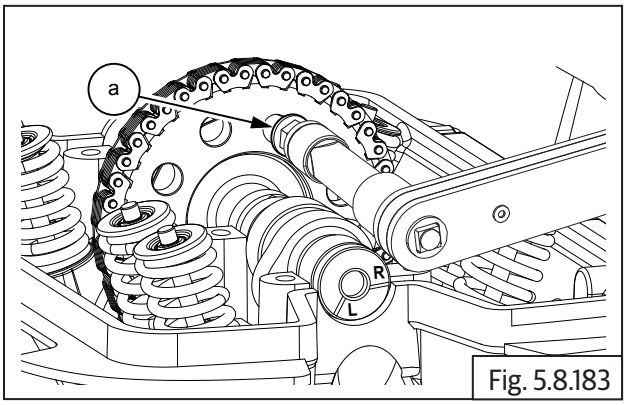

Fig. 5.8.183

	12 mm Socket with Torque wrench
Torque	33-35 N-m/3.3-3.5 kgf-m

- Remove the special tool from cylinder head on RH side.
- Rotate the magneto **(a)** anti-clockwise till the first bolt is visible at top most position on cam side sprocket.

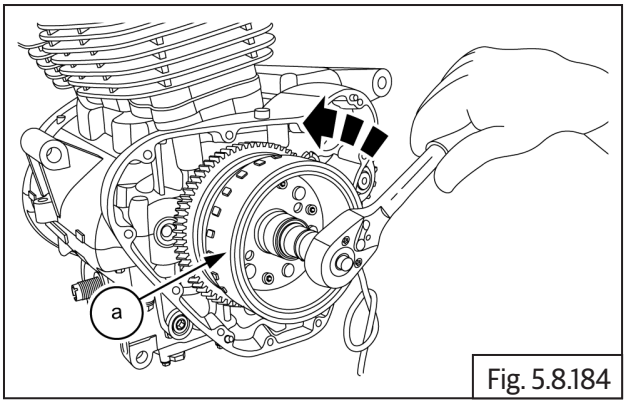

Fig. 5.8.184

- Ensure reference mark "L" in the camshaft is aligned to the cylinder head on LH side.

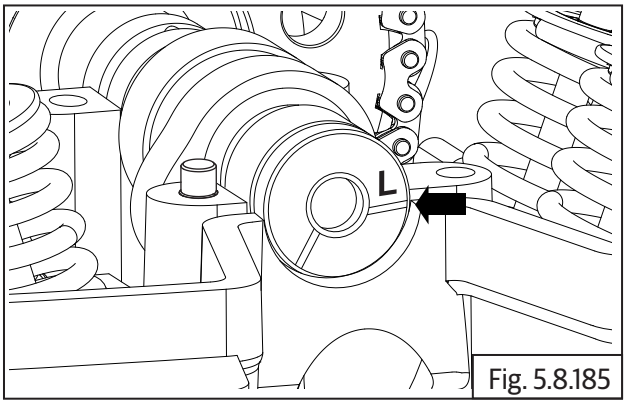

Fig. 5.8.185

- Tighten Hex head bolt **(M8) (a)** to specified torque.

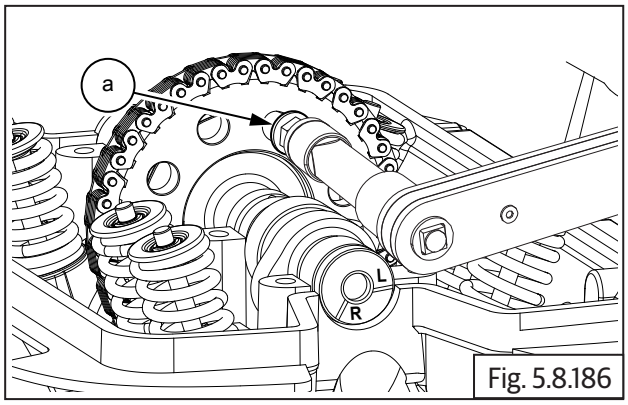

Fig. 5.8.186

	12 mm Socket with Torque wrench
Torque	33-35 N-m/3.3-3.5 kgf-m

Procedure 2

- Hold the timing chain in stretched condition and gently rotate crankshaft **(a)** anti-clockwise to bring LH piston to TDC.

NOTE
• *Insert special tool in crankcase RH to lock the crankshaft from rotating.*

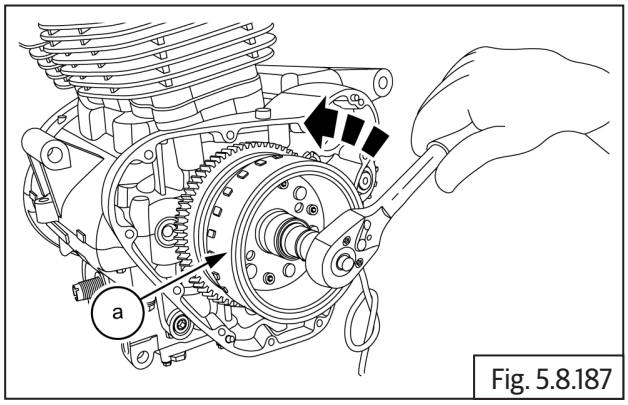

Fig. 5.8.187

	17 mm Socket with Ratchet

⚠ CAUTION
Do not rotate crankshaft clockwise.

- Hold sprocket in position with one of the slotted holes facing on top.

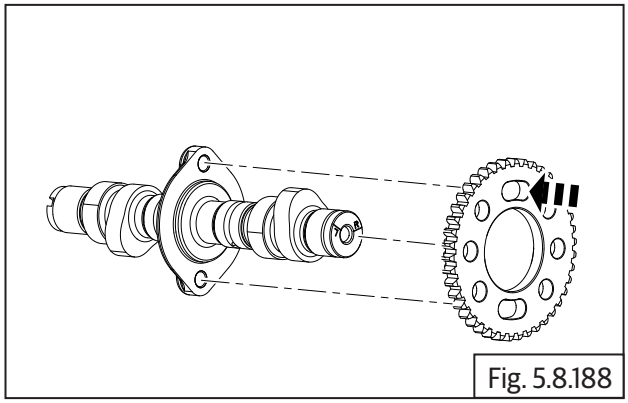
Fig. 5.8.188

- Assemble cam chain **(a)** on sprocket and locate camshaft **(b)** into sprocket from the RH side.

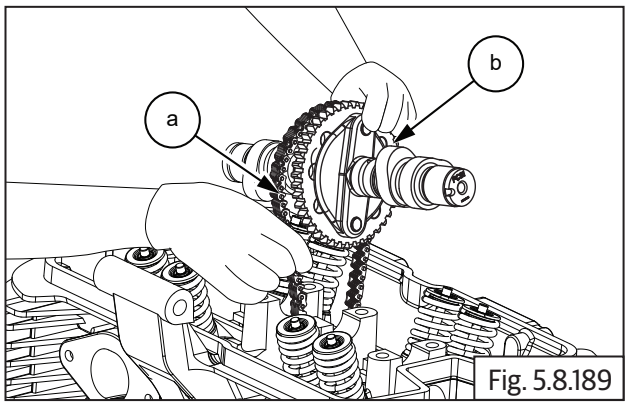

Fig. 5.8.189

- Ensure reference mark "L" in the camshaft is aligned to the cylinder head on LH side.

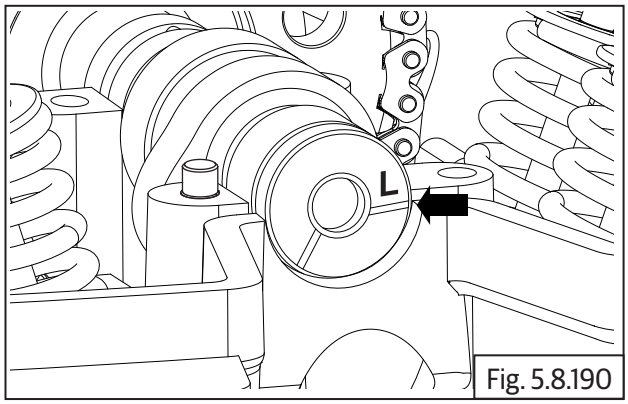

Fig. 5.8.190

- Locate timing chain sprocket on camshaft with its mounting slot centralised to the threads in the camshaft.
- Align special tool **(a)** and tighten it with rocker carrier bolts **(b)**.

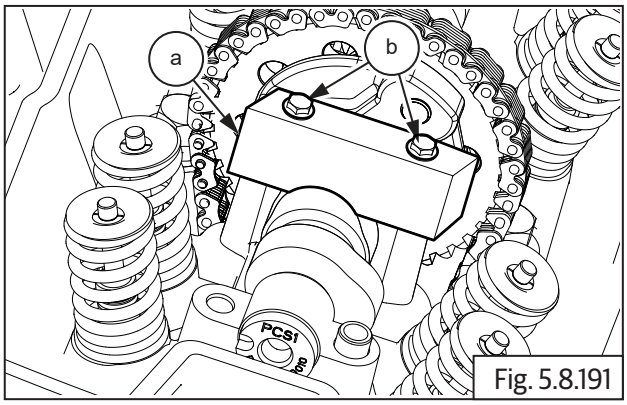

Fig. 5.8.191

- Locate and tighten Hex head bolt **(M8) (a)** sufficiently on timing chain sprocket. **Do not TIGHTEN FULLY.**

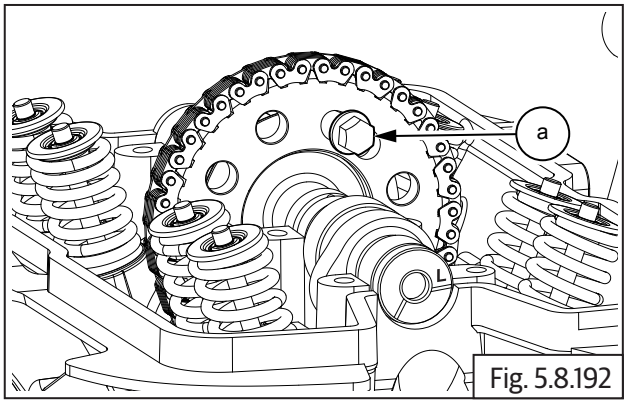

Fig. 5.8.192

	12 mm Socket with Torque wrench

- Remove the special tool from the camshaft on RH side.
- Rotate magneto **(a)** till another slotted hole on cam chain sprocket is at top most position. Ensure reference mark "R" aligned to the cylinder head.

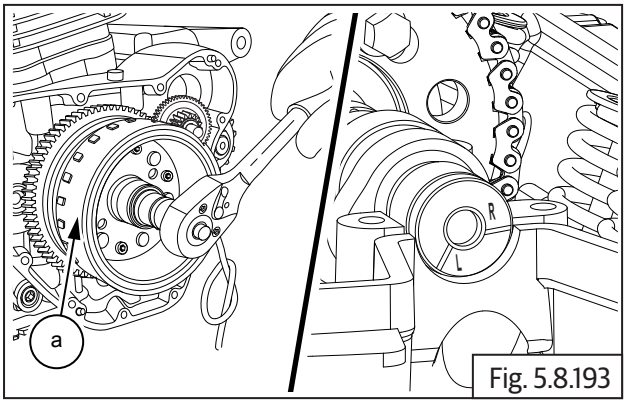

Fig. 5.8.193

	17 mm Socket with Ratchet

- Tighten Hex head bolt **(M8) (a)** to specified torque.

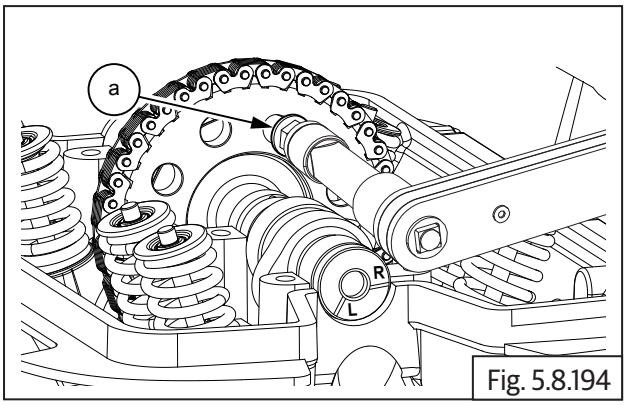

Fig. 5.8.194

	12 mm Socket with Torque wrench
Torque	33-35 N-m/3.3-3.5 kgf-m

- Remove the special tool from cylinder head on RH side.

- Rotate the magneto **(a)** anti-clockwise till the first bolt is visible at top most position on cam side sprocket.

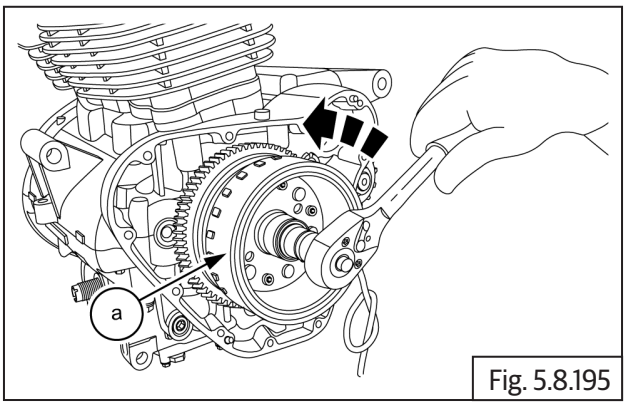

Fig. 5.8.195

- Ensure reference mark "L" in the camshaft is aligned to the cylinder head on LH side.

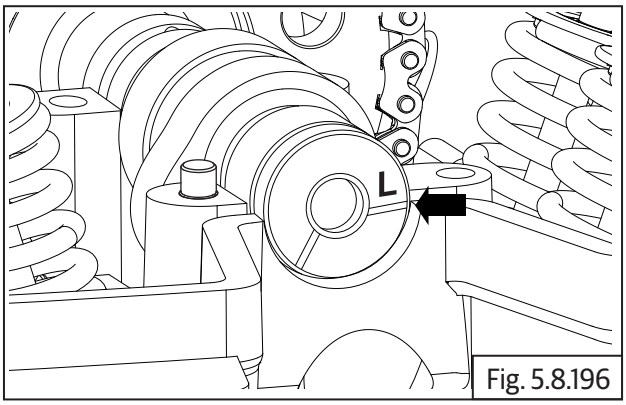

Fig. 5.8.196

- Tighten Hex head bolt **(M8) (a)** to specified torque.

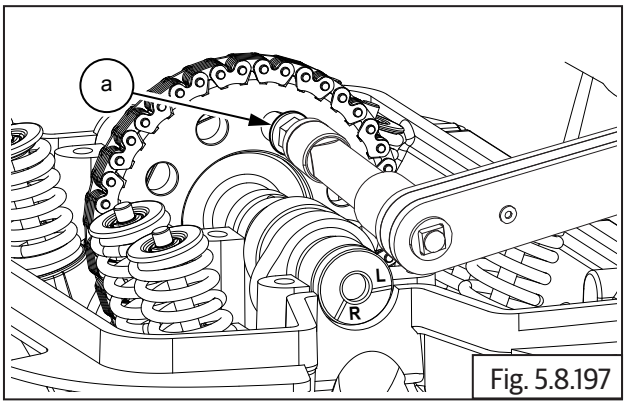

Fig. 5.8.197

	12 mm Socket with Torque wrench
Torque	33-35 N-m/3.3-3.5 kgf-m

5.8.28. Timing Chain Tensioner

- Ensure center bolt is removed from timing chain tensioner.

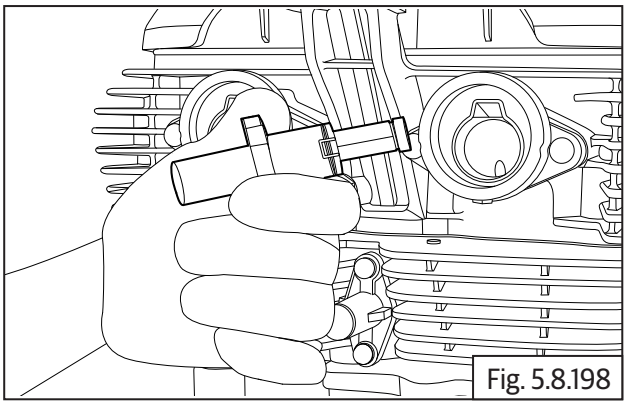
Fig. 5.8.198

- Assemble new gasket on chain tensioner adjuster **(a)**. Ensure the foot is fully retracted into chain tensioner and locate chain tensioner adjuster in cylinder barrel such that the longer side of the foot is facing towards cylinder barrel RH.

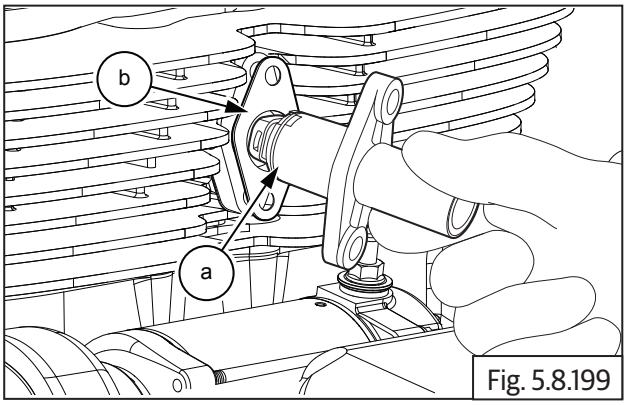

Fig. 5.8.199

- Assemble 2 Nos. Hex flange head bolt **(M6) (a)** on chain tensioner adjuster and tighten to specified torque.

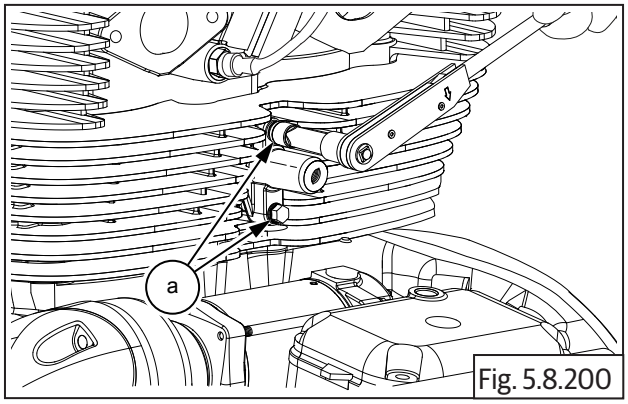

Fig. 5.8.200

	10 mm Socket with Torque wrench
Torque	10-12 N-m/1.0-1.2 kgf-m

.Locate new O-ring **(b)** and, assemble Hex flange head bolt **(M6) (a)** on chain tensioner adjuster and tighten fully to specified torque.

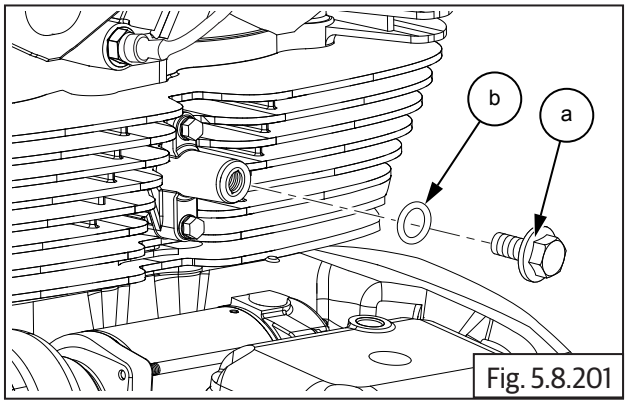

Fig. 5.8.201

	10 mm Socket with Ratchet and Torque wrench
Torque	4-5 N-m/0.4-0.5 kgf-m

5.8.29. Rocker Arms in Carriers LH and RH

Exhaust rocker arm in carrier "L"

- Place the carrier **(a)** on a work table with the mark "L" facing upwards.

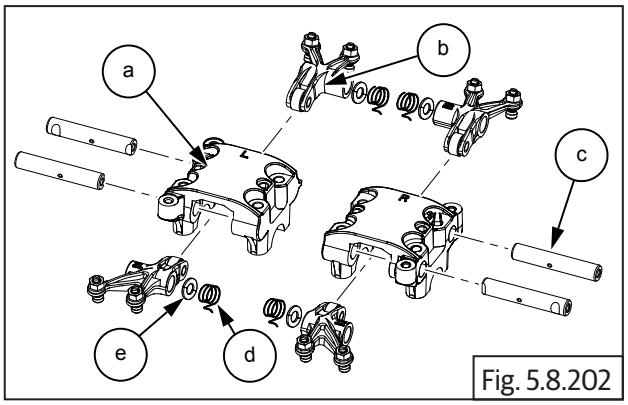

Fig. 5.8.202

- Gently depress the spring **(a)** and install into rocker carrierrs **(b)**.

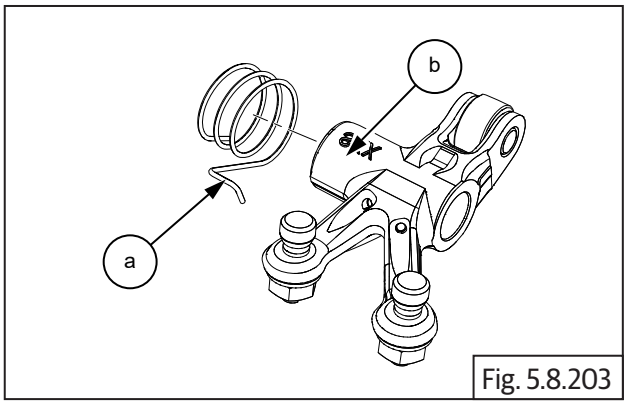

Fig. 5.8.203

- Locate rocker arm **(b)** with the marking "EL" into carrier "L" duly ensuring the following.
  - The roller of the rocker arm is inserted from the side marked "L".
  - The tappet adjustment screws are facing upwards.
  - Ensure the holes are aligned and insert spindle with its small chamfer side in the carrier.
  - Ensure cut away in spindle is correctly aligned to the carrier mounting hole.
  - Align and insert the spindle **(c)** into rocker carrier and rocker arm.

Intake rocker arm in carrier "L"

- Locate rocker arm with the marking "IL" into carrier "L" duly ensuring the following.
  - The roller of the rocker arm is inserted from the OPPOSITE side marked "L".
  - The tappet adjustment screws are facing upwards.
  - Ensure the holes are aligned and insert spindle with its small chamfer side in the carrier.
  - Ensure cut away in spindle is correctly aligned to the carrier mounting hole.
  - Align and insert the spindle **(c)** into rocker carrier and rocker arm.
- Repeat the above process to assemble rocker arm "ER" and "IR" into carrier "R".

5.8.30. Rocker Carrier on Cylinder Head LH

NOTE
• *Ensure "L" mark on camshaft is aligned to cylinder head.*

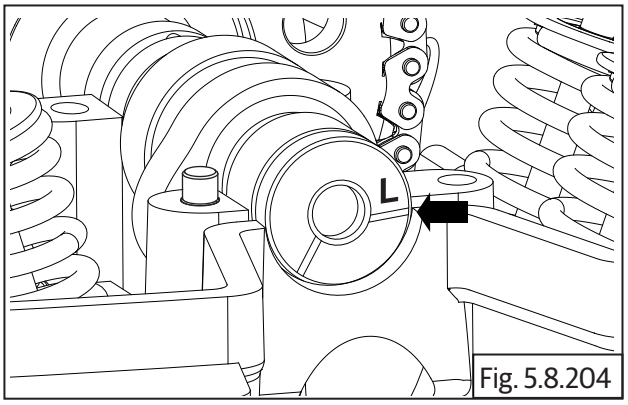

Fig. 5.8.204

- Insert special tool **(a)** in crankcase RH to lock the crankshaft and prevent rotation.

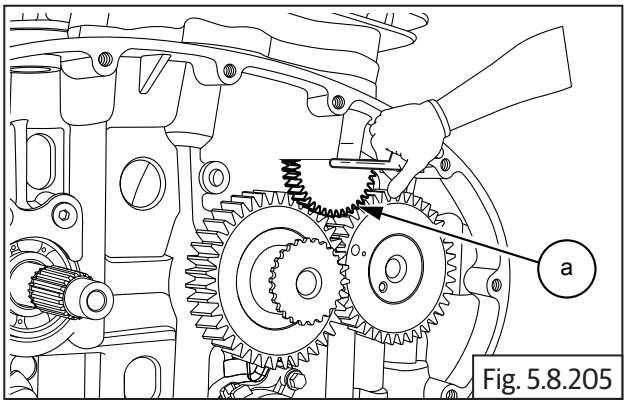

Fig. 5.8.205

SPL	Part No: ST-27533-2
	Part Name: Crank Gears Locking tool

- Ensure the tappet adjuster locknut and adjusters are fully loosened on the intake and exhaust rocker arms.
- Assemble rocker carrier LH **(a)** on cylinder head LH such that tappet adjusters are above the inlet and exhaust valves.
- Assemble 4 Nos. Hex flange head bolts **(M6) (b)** on rocker carrier and tighten in a crisscross pattern to torque specified torque.

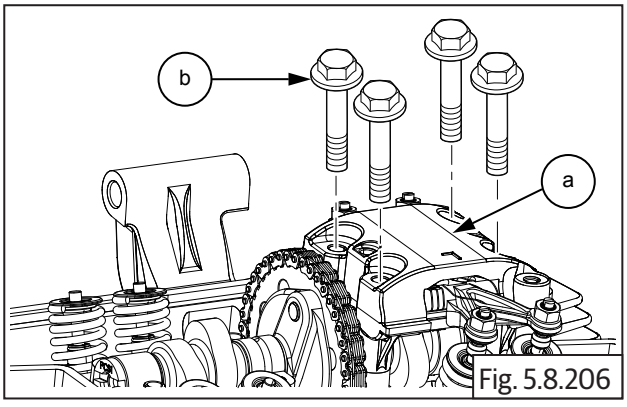

Fig. 5.8.206

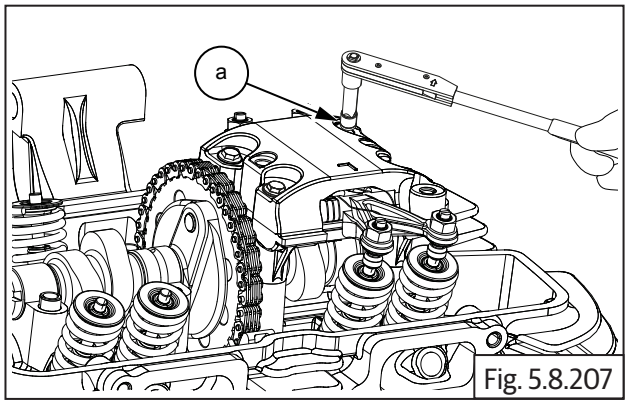

Fig. 5.8.207

	10 mm Socket with Torque wrench
Torque	10-12 N-m/1.0-1.2 kg-m

- Remove special tool from crankcase RH side.

5.8.31. Rocker Carrier on Cylinder Head RH

- Rotate magneto **(a)** anti-clockwise and ensure reference mark "R" is aligned with cylinder head.

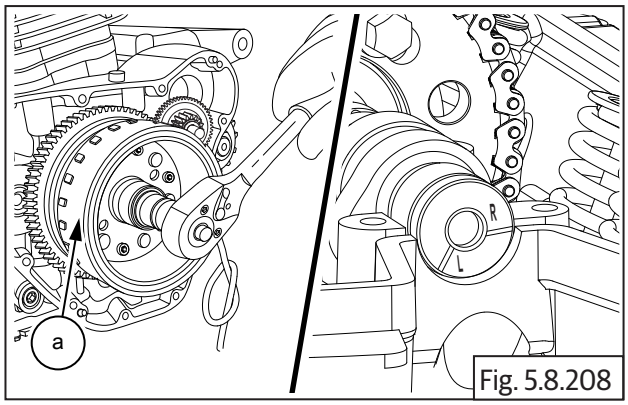

Fig. 5.8.208

	17 mm Socket with Ratchet

- Ensure the tappet adjuster locknut and adjusters are fully loosened on the intake and exhaust rocker arms.
- Assemble rocker carrier RH **(a)** on cylinder head RH such that the tappet adjusters are above the inlet and exhaust valves.
- Assemble 4 Nos. Hex flange head bolts **(M6) (b)** on rocker carrier **(a)** and tighten in a crisscross pattern to specified torque.

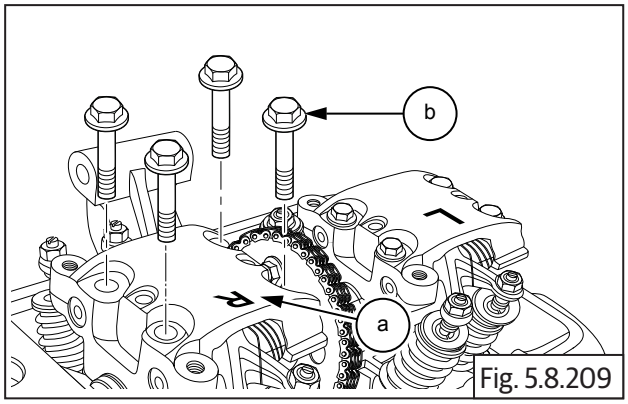

Fig. 5.8.209

- Tighten the bolts **(a)** to specified torque.

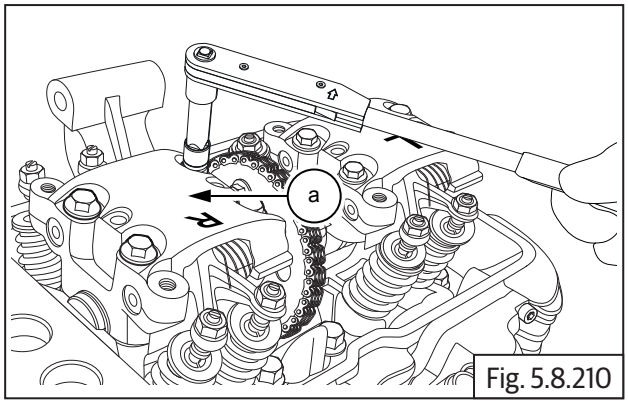

Fig. 5.8.210

	10 mm Socket with Torque wrench
Torque	12 N-m/1.2 kgf-m

- Ensure the special tools are removed from position after tightening bolts.

5.8.32. Tappet Clearance Adjustment

Tappet Clearance Cylinder head LH

- *Ensure "L" mark on camshaft* **(a)** *is aligned to cylinder head.*

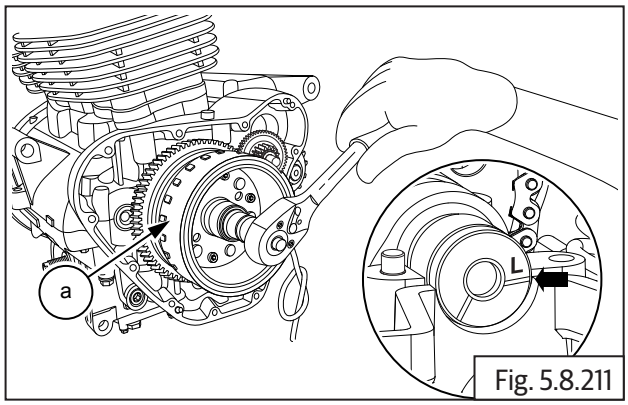

Fig. 5.8.211

- Loosen tappet adjuster screw locknut **(a)** with special tool and ensure locknut is sufficiently loose.

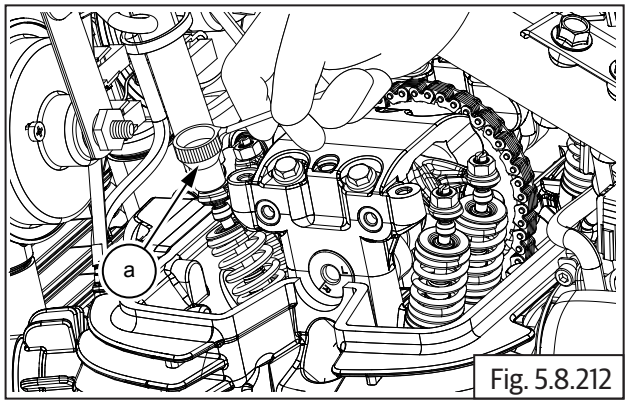

Fig. 5.8.212

- Insert a screw driver into the tappet adjusting tool **(b)** and ensure it is seated correctly on the adjuster screw **(a)**.

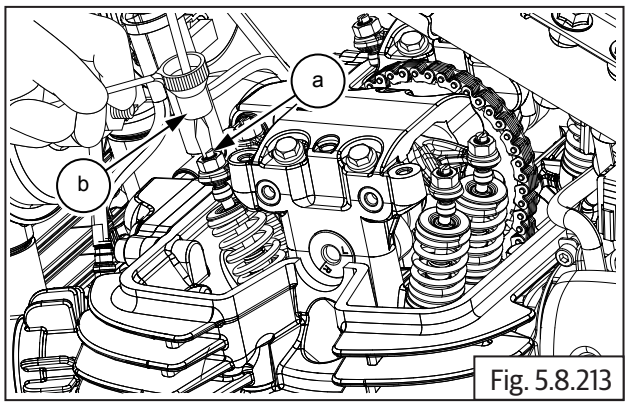

Fig. 5.8.213

- Locate feeler strip **(a)** between adjuster screw and valve stem as per thickness mentioned below.

For intake	0.08 mm
For exhaust	0.18 mm

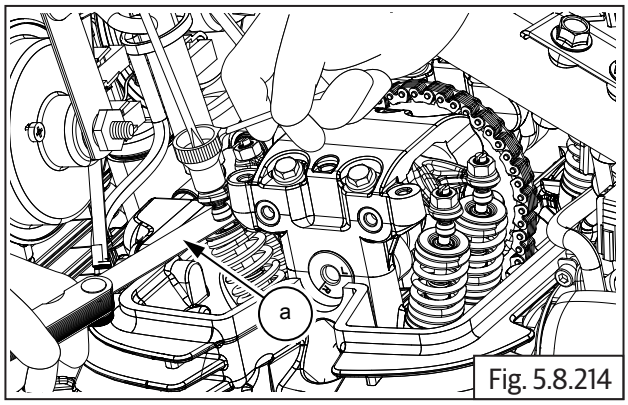

Fig. 5.8.214

- Gently pull out feeler strip **(a)** and check if it comes out freely OR with resistance.

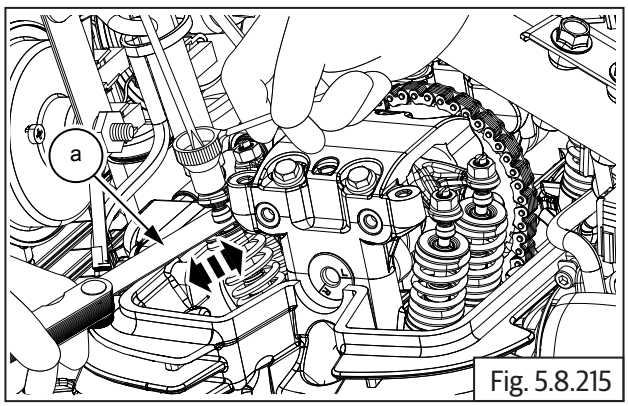

Fig. 5.8.215

- In case feeler strip comes out freely the adjuster screw has to be tightened.
- In case feeler strip movement is hard, the adjuster screw must be loosened.
- Tighten/loosen adjuster screw using screw driver, while simultaneously checking correct and smooth movement of feeler strip.

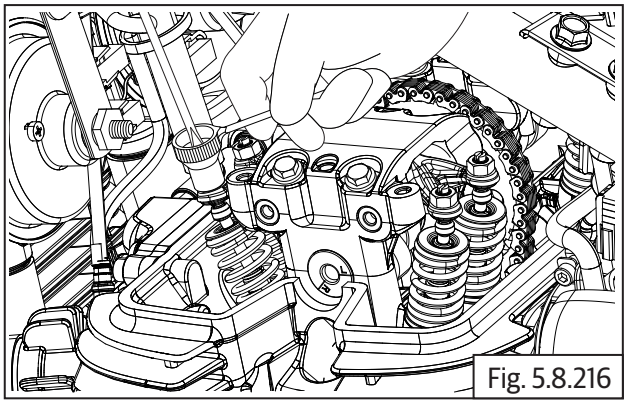

Fig. 5.8.216

	10 mm Socket with Torque wrench
Torque	10-12 N-m/1.0-1.2 kgf-m

- After setting correct gap, remove feeler strip, hold screw driver firmly such that the setting **DOES NOT** gets distrubed and gently lock the lock nut against rocker arm using special tool **(a)**.

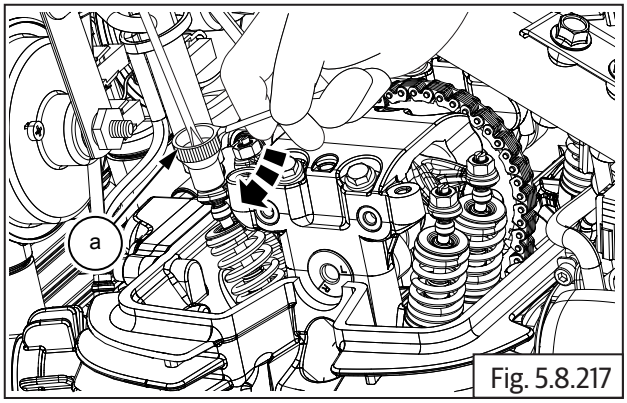

Fig. 5.8.217

NOTE
• *Reconfirm correctness of tappet clearances before final locking of lock nut .*

⚠ **CAUTION**
Do not adjust tappets with less OR no clearance as it will result in poor compression, valve burn-out and wear-out of tappet adjuster foot.
Do not adjust tappet with high clearance as will result in noise and insufficient opening of the valves.

- Remove screw driver and both special tools after adjustment is complete.

Tappet Clearance Cylinder Head RH

NOTE
• *Ensure "R" mark on camshaft is aligned to cylinder head.*

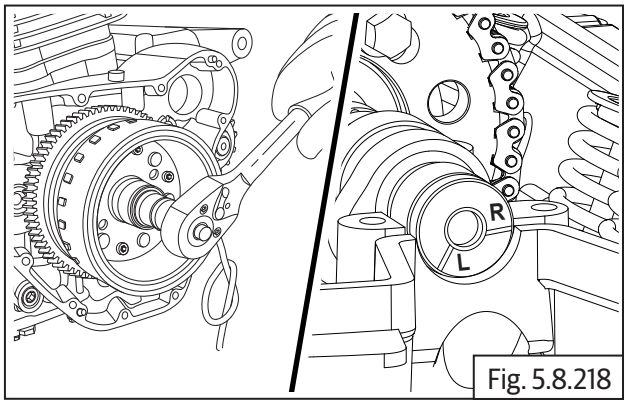

Fig. 5.8.218

- Adjust the RH tappets clearances as mentioned in tappets adjustment LH.

5.8.33. Cover Cylinder Head

NOTE
• *Ensure the cover-cylinder head seating surface and gasket seating groove are clean.*
• *Ensure sealant is applied in head gasket groove before assembly.*

- Locate new rubber gasket in the groove in cylinder head and ensure it is properly and evenly seated .

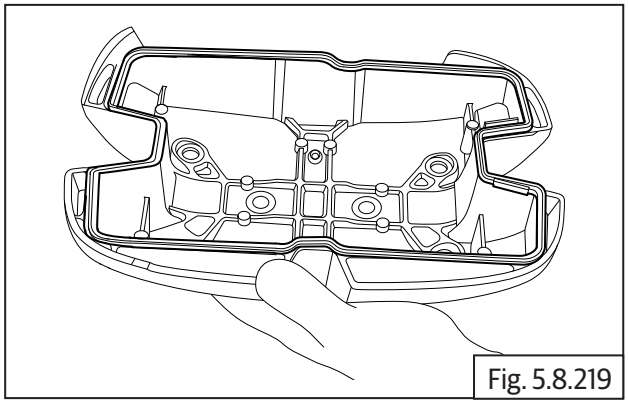
Fig. 5.8.219

- Locate cylinder head cover **(a)** on cylinder head **(b)** with its narrow deep slot facing towards front of the engine.

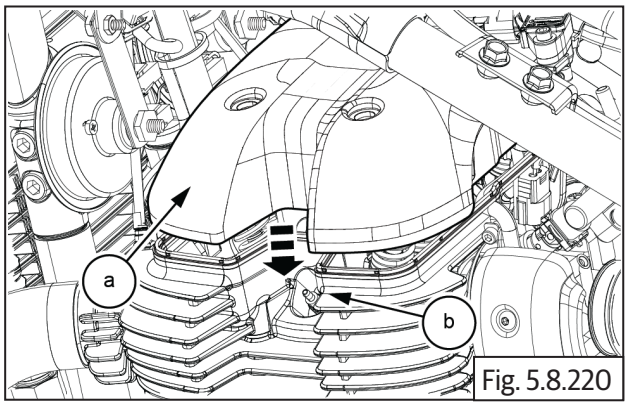

Fig. 5.8.220

- Assemble new seals washers **(a)** on the 4 Nos. Hex flange head bolts **(M6) (b)**.
- Locate the bolts on cylinder head cover **(c)** and tighten bolts to cylinder head evenly to specified torque.

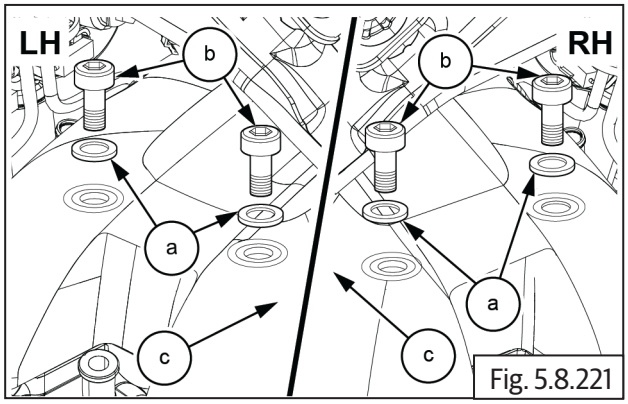

Fig. 5.8.221

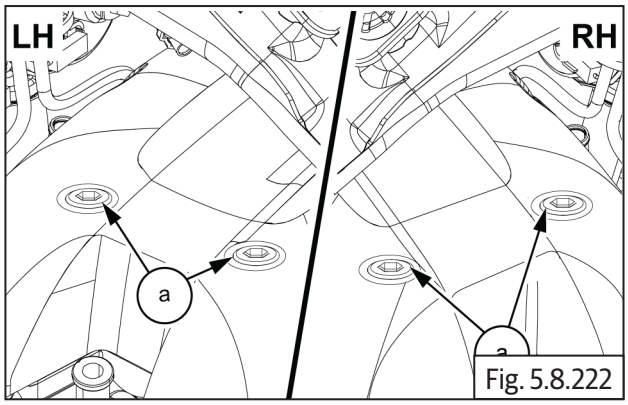

Fig. 5.8.222

	8 mm Socket with Torque wrench
Torque	10-12 N-m/1.0-1.2 kgf-m

5.8.34. Inlet Manifold Rubber Flanges LH & RH

- Locate 2 Nos. inlet manifold rubber flanges **(a)** on the cylinder heads, duly ensuring the "cut away" in the manifolds are matching with the "cut away" in the cylinder head.

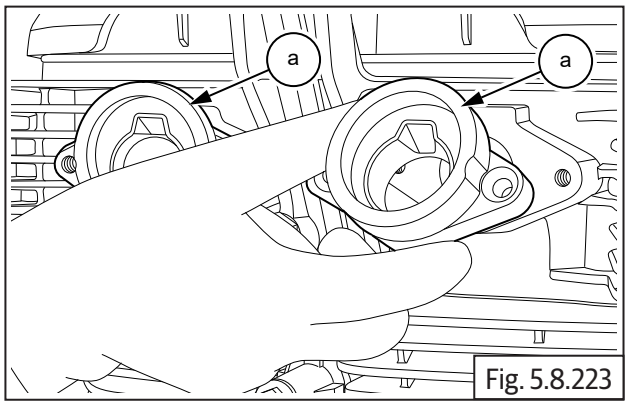

Fig. 5.8.223

- Locate and tighten 2 Nos. each countersunk head bolts **(M5) (a)** on the manifold rubber flanges on inlet manifold LH & RH.

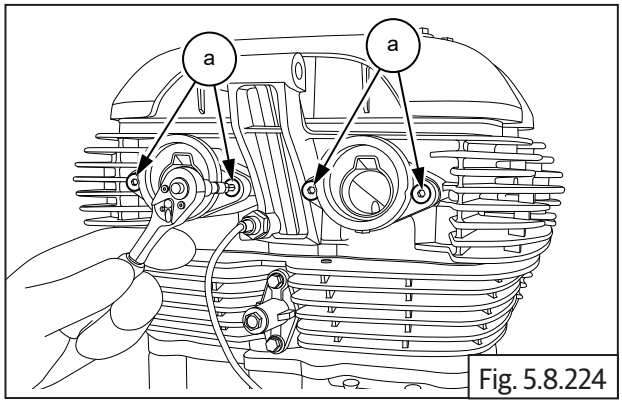

Fig. 5.8.224

	4 mm Allen socket with Ratchet and Torque wrench
Torque	2 N-m/0.2 kgf-m

5.8.35. Star Index

- Locate and tighten 2 Nos. Hex head bolts **(M6) (a)** on selector fork shaft stopper plate.

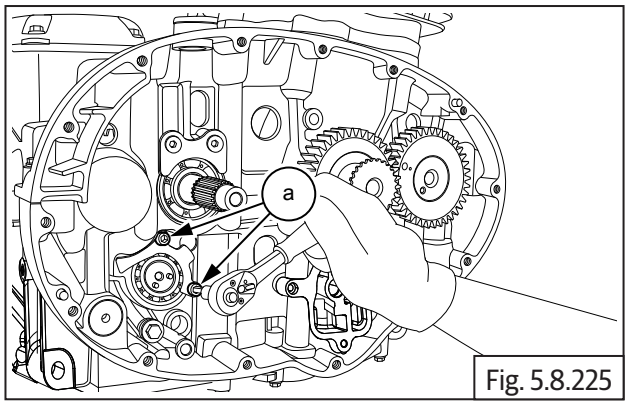

Fig. 5.8.225

	5 mm Allen socket with Torque wrench
Torque	10-12 N-m/1.0-1.2 kgf-m

- Locate and tighten Hex socket head stepped bolt **(M6) (a)** on gear shift cam drum.

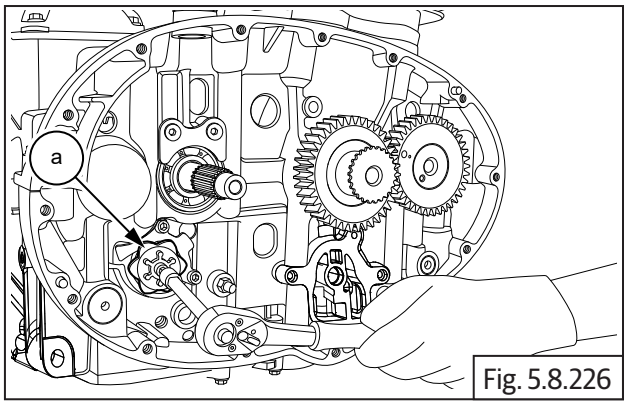

Fig. 5.8.226

	5 mm Allen socket with Ratchet

5.8.36. Star Index Stopper

- Locate spring and stopper plate support **(a)** on RH lower crankcase and assemble Hex head flange bolt **(M6) (b)**.

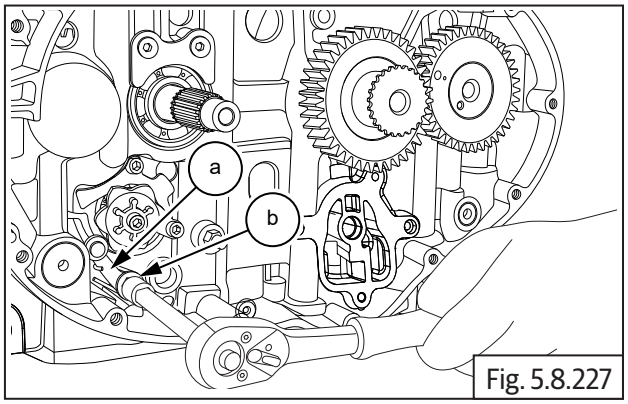

Fig. 5.8.227

	10 mm Socket with Torque wrench
Torque	10-12 N-m/1.0-1.2 kgf-m

NOTE
• *Handle stopper plate tension spring carefully else it may damage supporting components.*

Shifter Selector Shaft Assembly

5.8.37. Shifter Selector Shaft

- Assemble inner spring **(a)** from the longer side of shifter shaft **(b)**.
- Ensure the legs of the spring are correctly located in the plate on the shifter shaft.

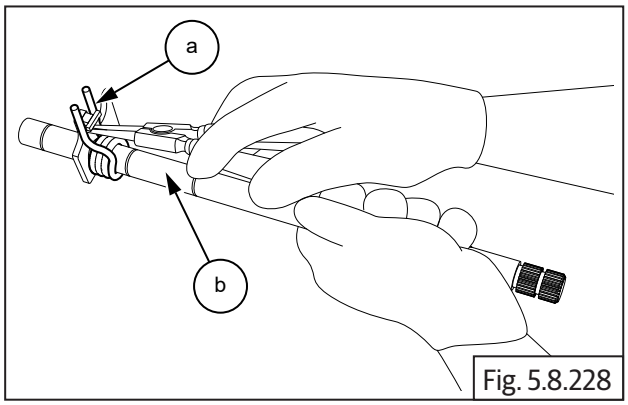

Fig. 5.8.228

	Circlip plier

- Assemble inner circlip **(a)** on longer end of shifter shaft **(b)**. Ensure it is properly seated on shifter shaft groove near the spring.

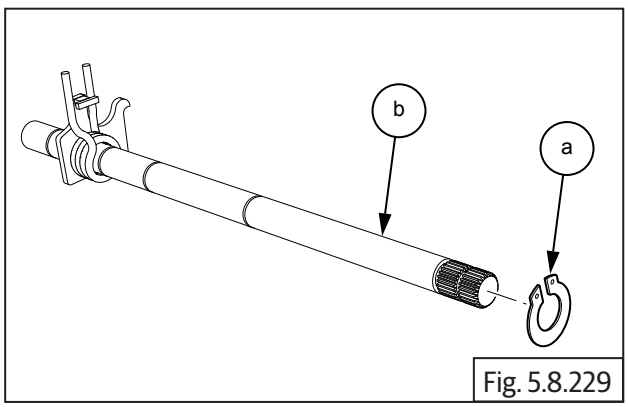

Fig. 5.8.229

	Circlip plier

- Assemble 1st inner washer **(a)** from the longer end of shifter shaft **(b)**.

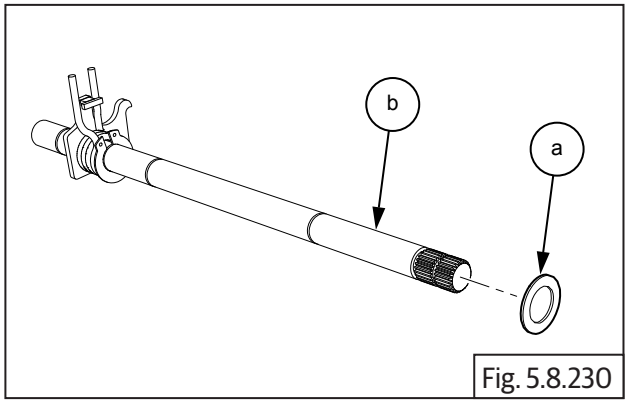

Fig. 5.8.230

- Assemble outer plate **(a)** from smaller end of shifter shaft with its projection facing towards the longer end of the shaft.
- Ensure the peg on the shifter shaft is located correctly in the hole on the outer plate **(a)**.

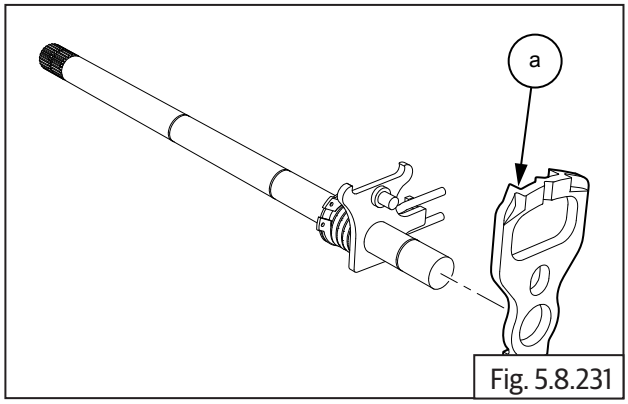

Fig. 5.8.231

- Assemble outer spring **(a)** from smaller end of shifter shaft.

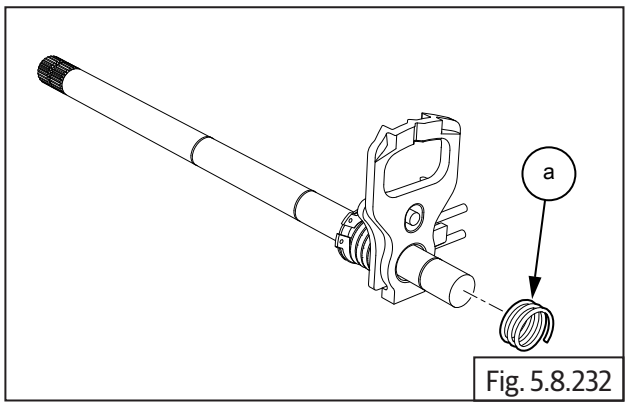

Fig. 5.8.232

- Assemble outer washer **(a)** from the smaller end of shifter shaft.

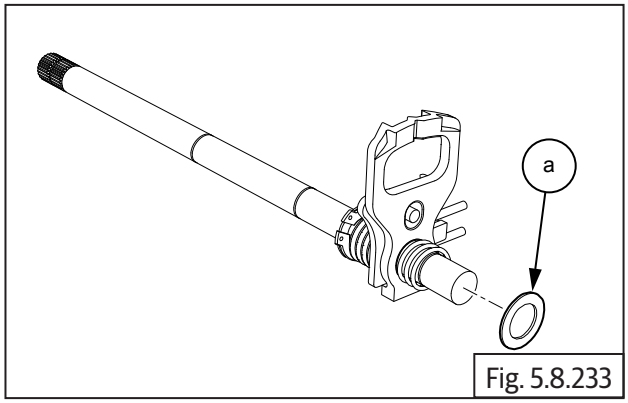

Fig. 5.8.233

- Assemble outer circlip **(a)** from smaller end of shifter shaft.

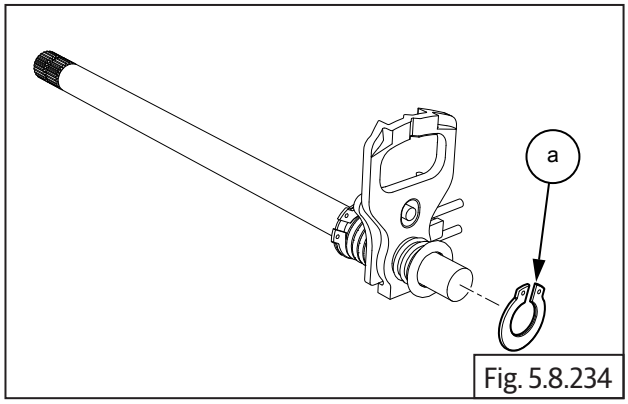

Fig. 5.8.234

	Circlip plier

- Insert longer end of the shifter shaft **(a)** into the hole in the lower crankcase from the RH side.
- Ensure the shifter plate is correctly seated over the star index.

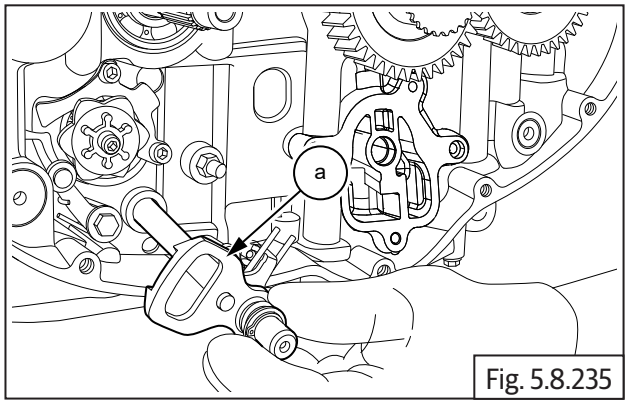

Fig. 5.8.235

- Assemble washer **(a)** on the shifter shaft on the LH side.

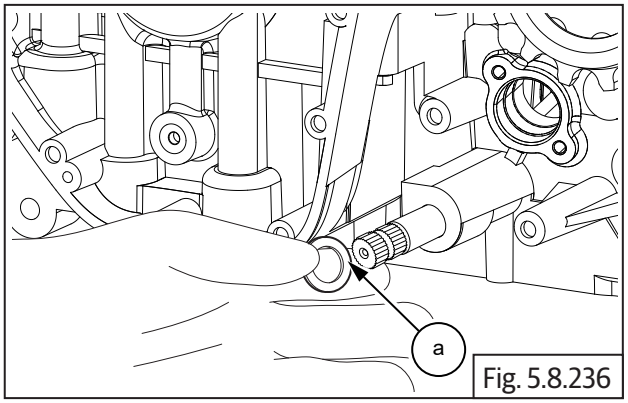

Fig. 5.8.236

- Assemble circlip **(a)** on the shifter shaft at the LH side and ensure it is correctly seated and locked in the groove on the shifter shaft.

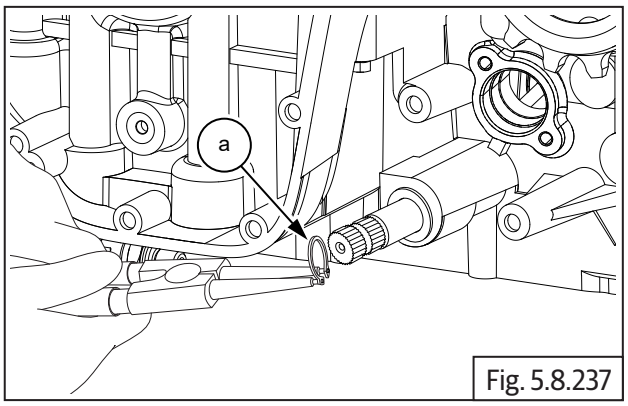

Fig. 5.8.237

	Circlip plier

5.8.38. Oil Pump

- Locate oil pump mounting point below crankshaft gear in RH crankcase.
- Assemble 4 Nos. Hex flange head bolts **(M6) (a)** on oil pump **(b)** and tighten bolts to specified torque.

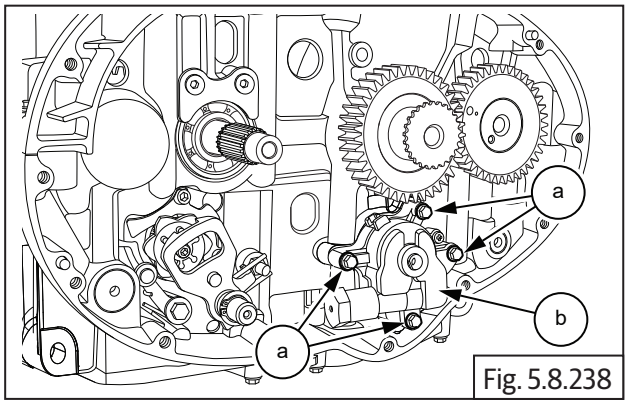

Fig. 5.8.238

	10 mm Socket with Ratchet
Torque	10-12 N-m/1.0-1.2 kgf-m

- Locate and fit oil pump drive chain **(a)** on crankshaft gear **(b)** and sprocket on oil pump.
- Pump Sprocket OUT and Pump Chain Coloured Link to be facing outside when assembling.

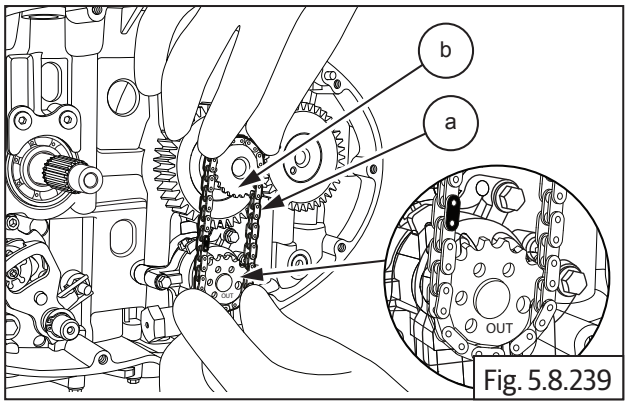

Fig. 5.8.239

- Locate Hex flange head bolt **(M6) (a)** on oil pump and tighten to specified torque.

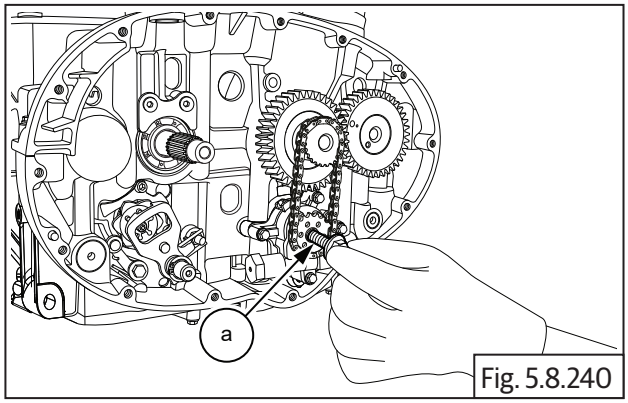

Fig. 5.8.240

NOTE
• *Lock the crank shaft by using special tool to prevent rotation while tightening bolt.*

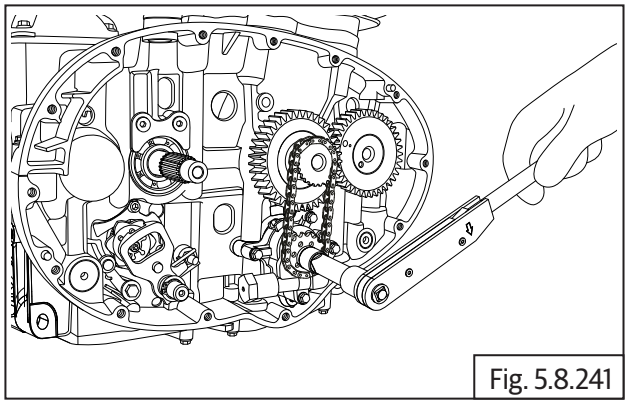
Fig. 5.8.241

	10 mm Socket with Torque wrench
Torque	10-12 N-m/1.0-1.2 kgf-m

Clutch Plate Assembly

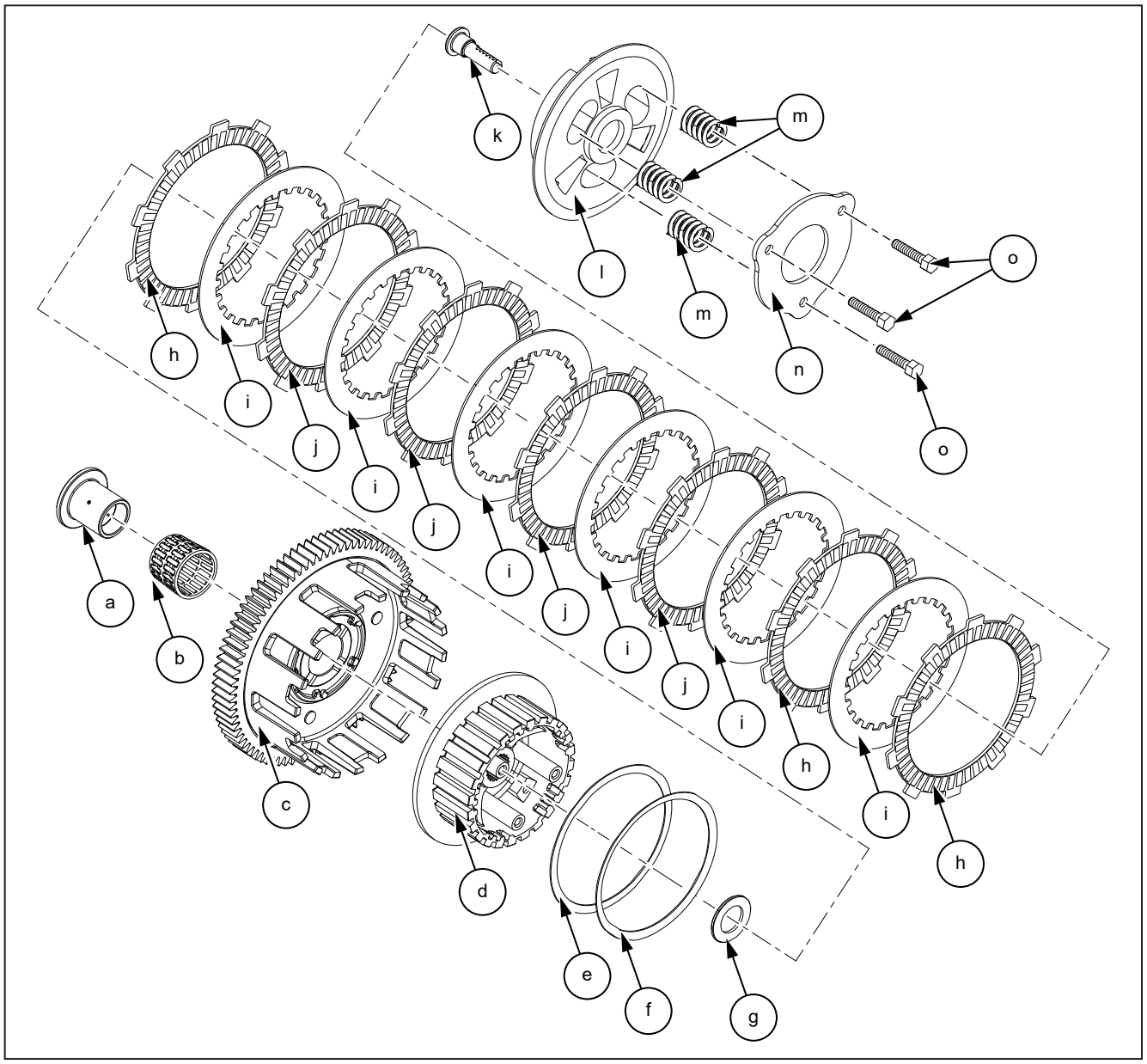

Item No.	Description	Quantity	Item No.	Description	Quantity
a	Collar bush	1	i	Clutch steel plates	6
b	Needle bearing	1	j	Clutch friction plates with smaller ID	4
c	Clutch Housing	1	k	Pull rod	1
d	Clutch bell	1	l	Clutch hub	1
e	Anti-Judder washer Plain	1	m	Springs	3
f	Belleville washer	1	n	Pressure plate	1
g	Thrust washer	1	o	Hex flange head bolts M6	3
h	Clutch friction plate with Bigger ID	3			

5.8.39. Clutch Assembly

- Ensure collar on bush **(a)** is facing inward and assemble it on Counter shaft **(b)**. Ensure it is seated properly.

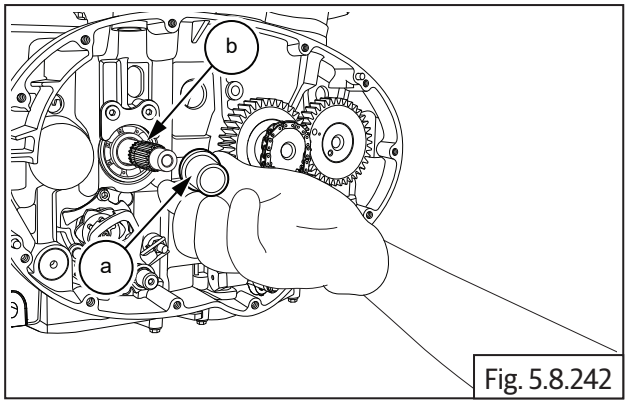

Fig. 5.8.242

- Assemble needle bearing **(a)** on Counter shaft **(b)**.

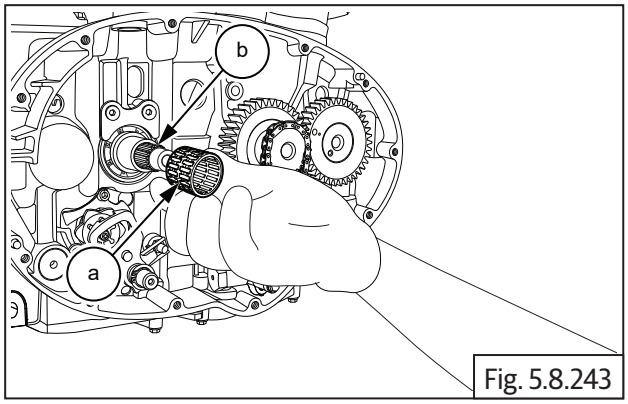

Fig. 5.8.243

- Locate clutch housing **(a)** on counter shaft, with its lugs **(b)** facing outside.
- Ensure the clutch housing gear is correctly meshed with the gear on crankshaft.

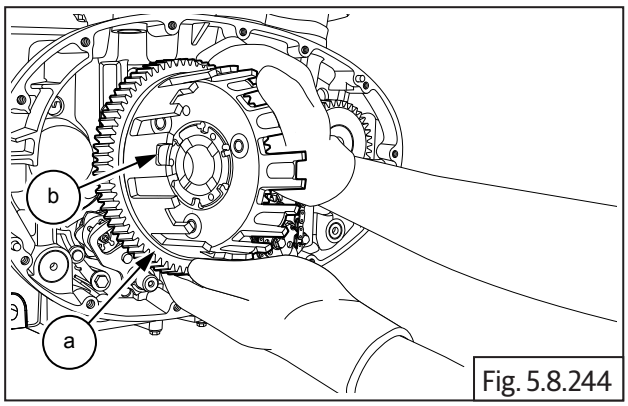

Fig. 5.8.244

- Assemble thrust washer **(a)** on Counter shaft.

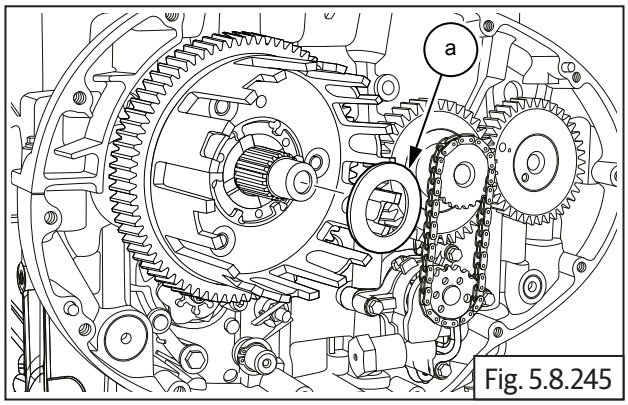

Fig. 5.8.245

- Locate bell assembly **(a)** on the splines on counter shaft **(b)**.

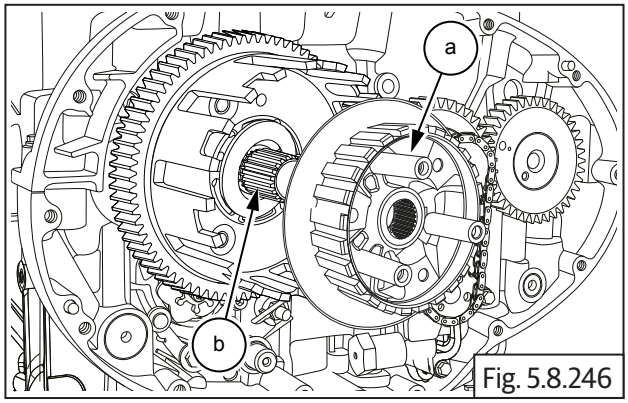

Fig. 5.8.246

- Locate the anti-judder steel washer-plain, in the groove in the clutch bell.
- Assemble Belleville washer over judder washer in the clutch bell.
- **Ensure the "hump" of the belleville washer is facing inside and seated against the judder washer.**
- Assemble 1st friction plate with larger ID (less friction area) ensuring the splines of the plate are correctly positioned and located on the clutch housing.
- Assemble 1st steel plate ensuring the splines on the plate are correctly positioned and located on the clutch bell.
- Assemble 2nd friction plate on the clutch housing and ensure it is seated against the 1st steel plate.

- Assemble 2nd steel plate on clutch bell.
- Assemble 3rd friction plate on clutch housing.

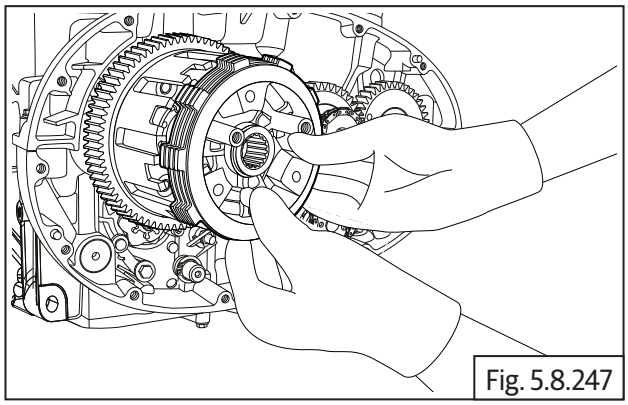

Fig. 5.8.247

- Assemble washer **(a)** on Counter shaft.

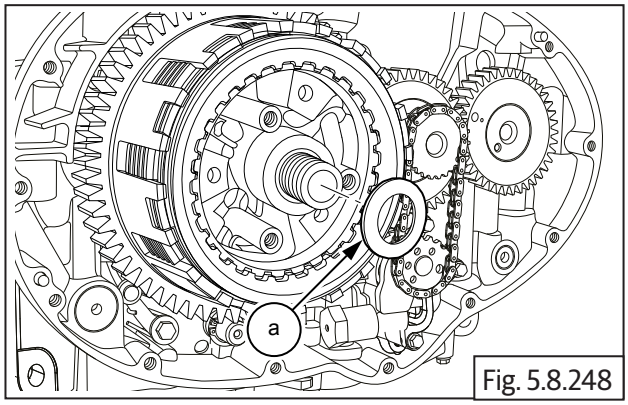

Fig. 5.8.248

- Locate the Hex "U" nut **(M17) (a)**.

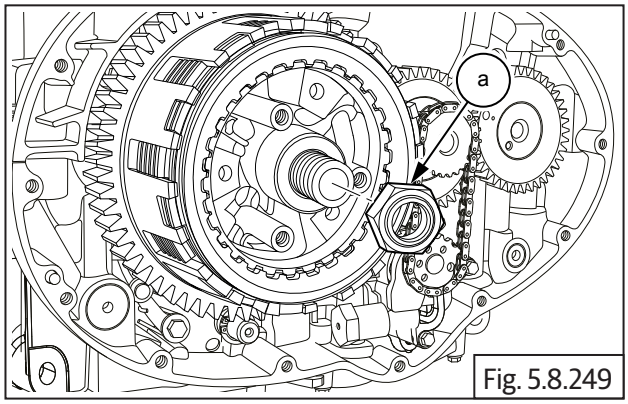

Fig. 5.8.249

⚠ CAUTION

Hex U nut is left hand thread. Turn anticlockwise to tighten nut on shaft.

- Locate and hold special tool on clutch assembly and tighten clutch hub nut to specified torque.

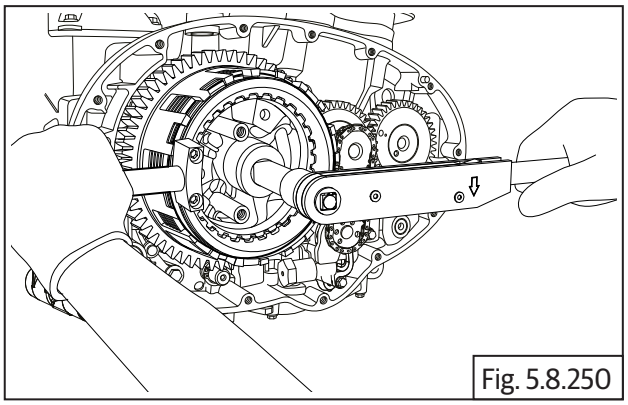

Fig. 5.8.250

SPL 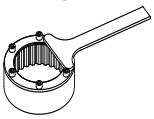	Part No: ST-27558-1
	Part Name: Clutch plate holder with Torque wrench
Torque	110-130 N-m/11.0-13.0 kgf-m

- Remove special tool and further assemble the following
  - 3rd Steel plate on clutch bell .
  - 4th Friction plate on clutch housing.
  - 4th Steel plate on clutch bell.
  - 5th Friction plate on clutch housing.
  - 5th Steel plate on clutch bell.
- Locate 6th friction plate **(a)** with larger ID (less friction area) on clutch hub **(b)** and ensure it is seated properly against the inner face of the clutch hub.

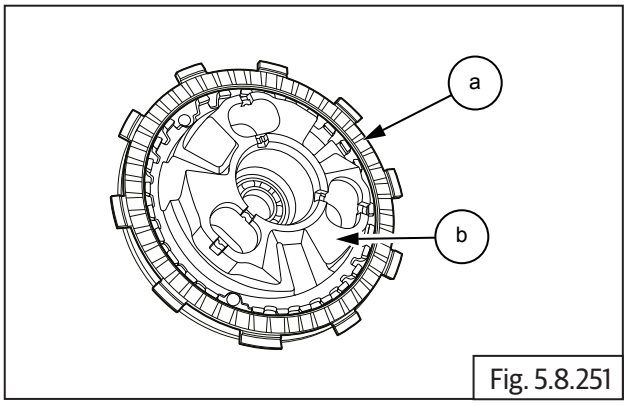

Fig. 5.8.251

- Locate 6th steel plate **(a)** on the splines in clutch hub **(b)** and ensure it is properly seated against the 6th friction plate.

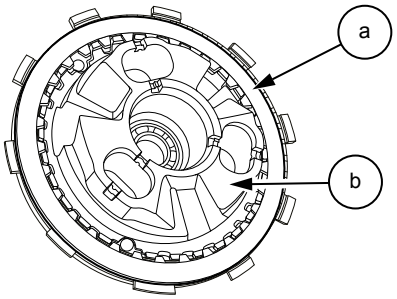

Fig. 5.8.252

- Locate 7th friction plate **(a)** with larger ID (less friction area) on clutch hub **(b)** such that its lugs are offset and between 2 lugs of the 6th friction plate.

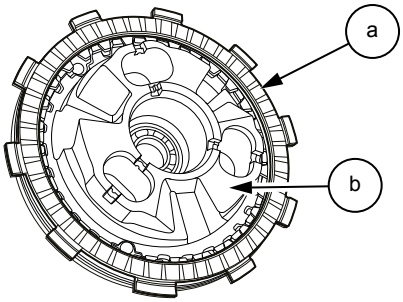

Fig. 5.8.253

- Locate clutch hub **(a)** into clutch bell duly ensuring the following:
- Insert pull rod **(b)** into clutch housing from the inside, such that the serrations on the pull rod are facing outside.
- Ensure pull rod is fully and properly seated against the bearing on the inside.

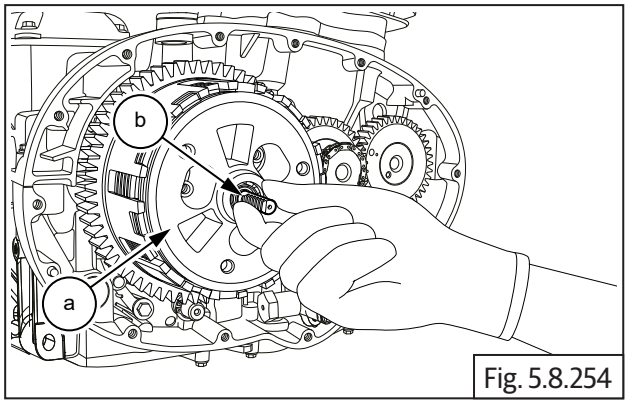

Fig. 5.8.254

- The outer lugs of 7th friction plate are correctly located in the INNER slots of the clutch housing.
- The outer lugs of 6th friction plate are correctly located in the OUTER slots of the clutch housing.
- The 3 lugs of the clutch hub are correctly positioned between the 3 slots in the clutch bell. (Gently rotate clutch hub back and forth, to match the slots of the clutch bell).
- The three mounting studs of the clutch bell are central to the slots in the clutch hub.
- Insert 3 Nos. Compression springs **(a)** in hub.

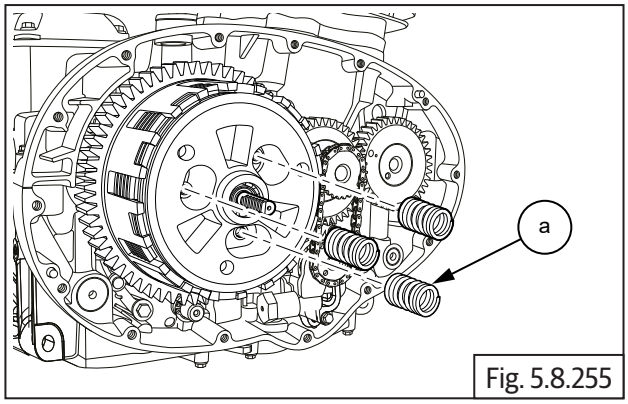

Fig. 5.8.255

- Locate pressure plate **(a)** on clutch hub with the words **"OUT"** and **"FR"** facing outside.
- Assemble 3 Nos. Hex bolts **(M6) (b)** and tighten pressure to clutch hub, sequentially to specified torque.

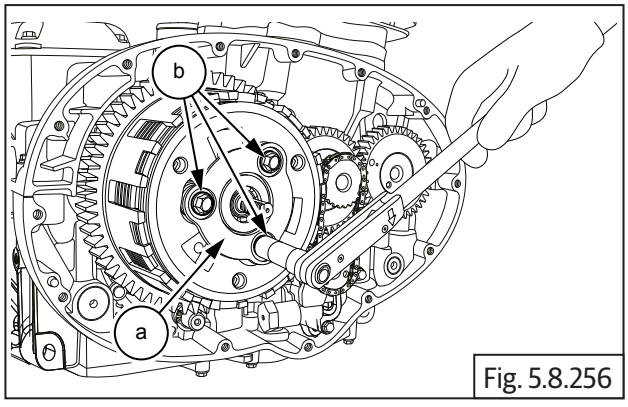

Fig. 5.8.256

	10 mm Socket with Torque wrench
Torque	10 N-m/1 kgf-m

5.8.40. Oil Level Window in Clutch Cover

- Locate new oil window **(a)** on clutch cover with the window facing towards clutch cover outer and gently press till it is seated fully inside.

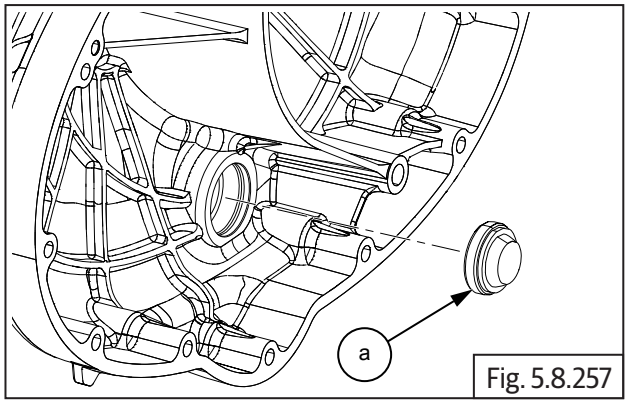

Fig. 5.8.257

- Assemble circlip **(a)** in the groove in clutch cover to lock the oil level window in place.
- Ensure circlip is correctly locked in the clutch cover.

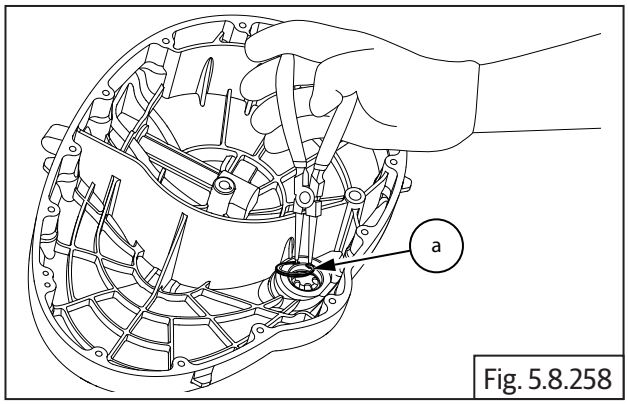

Fig. 5.8.258

	Circlip plier

NOTE
• *Apply Loctite 243 around the Oil Level Inspection window before installing in the clutch case.*

5.8.41. Clutch Actuating Lever Assembly

- Ensure needle bearings **(a)** are assembled in the clutch cover.

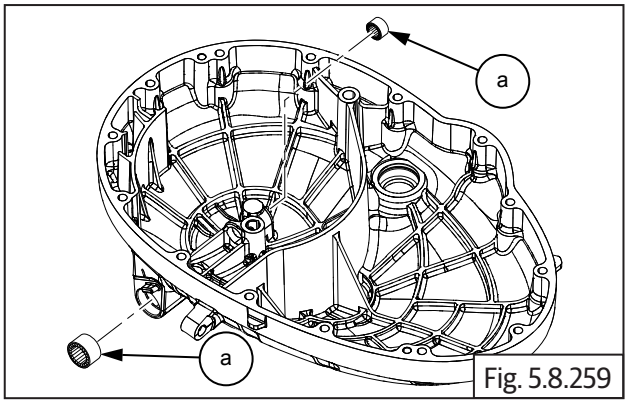

Fig. 5.8.259

SPL 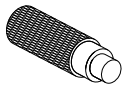	Part No: ST-27564-1
	Part Name: Clutch Act Lever top BRG Inst

SPL 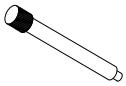	Part No: ST-27541-1
	Part Name: Clutch Act Lever Btm BRG Inst

- Insert clutch actuating shaft **(a)** into clutch cover **(b)** with the gear facing inside and the splines facing outside.

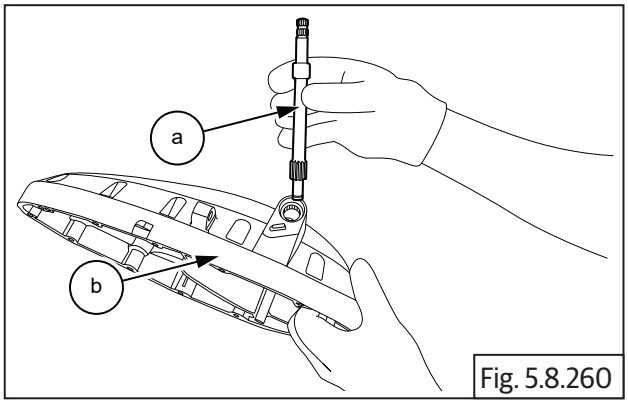

Fig. 5.8.260

- Assemble washer **(b)** on the shaft bottom inside the clutch cover.
- Assemble E-clip **(a)** in the slot in shaft bottom inside clutch cover.

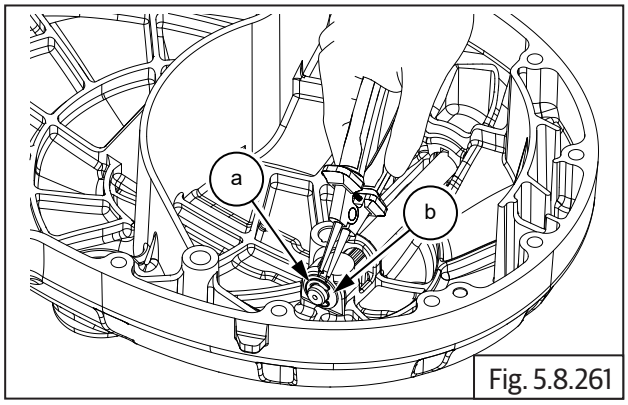

Fig. 5.8.261

	Nose plier

- Assemble new oil seal **(a)** into clutch cover at the top with the lips facing down.
- Assemble washer **(b)** above oil seal.

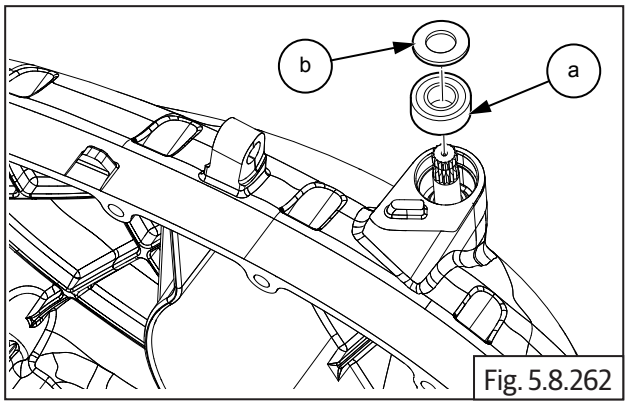

Fig. 5.8.262

5.8.42. Clutch Cover

- Ensure the 2 Nos. dowel pins **(a)** are seated properly on crankcase.

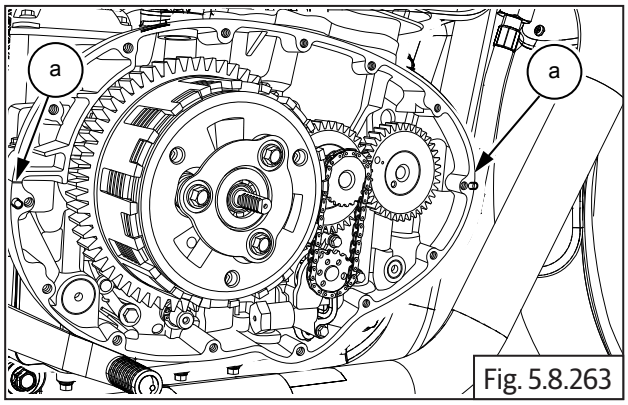

Fig. 5.8.263

- Install gasket **(a)** on crankcase if necessary smear engine oil and ensure it is properly seated on dowels. **Do not** use any sealant or adhesive.

NOTE
• *Apply Loctite 5910 over the dowel pins* **(a)**

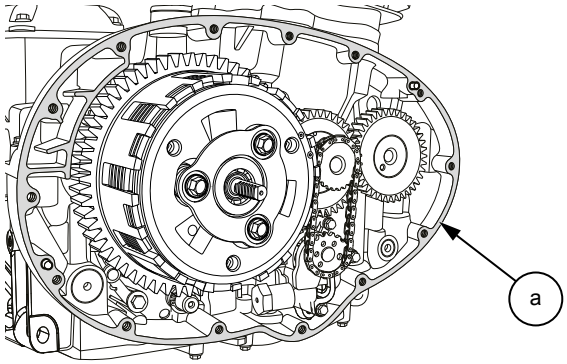

- Ensure racks on the clutch pull rod is facing towards the rear of the engine.
- Hold the clutch cover **(a)** in position, rotate the clutch actuating shaft to ensure it is engaged correctly with the pull rod and gently tap cover inside to seat it on the dowels and crankcase.

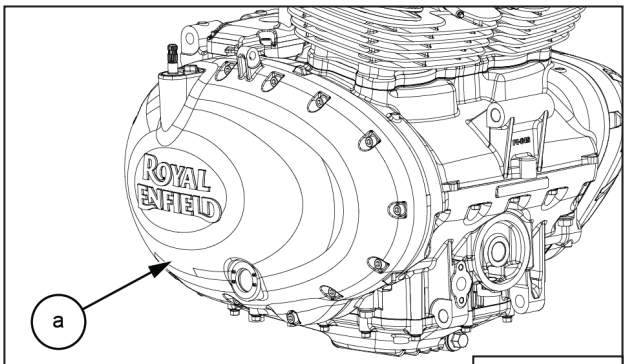

Fig. 5.8.264

- Locate 14 Nos. Hex socket bolts **(M6) (a)** on clutch cover and tighten them crisscross pattern.

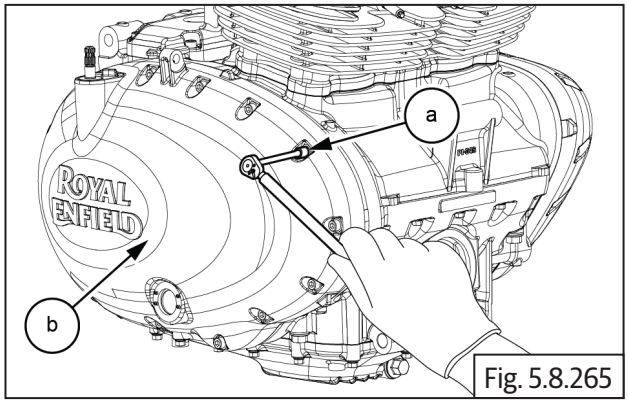

Fig. 5.8.265

	5 mm Allen socket with Ratchet

- Tighten bolts **(a)** evenly to specified torque.

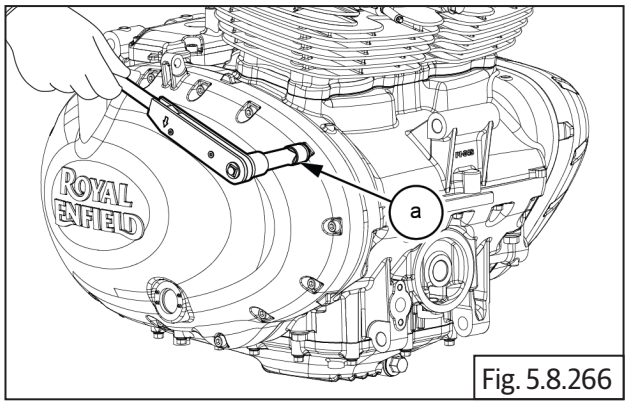

Fig. 5.8.266

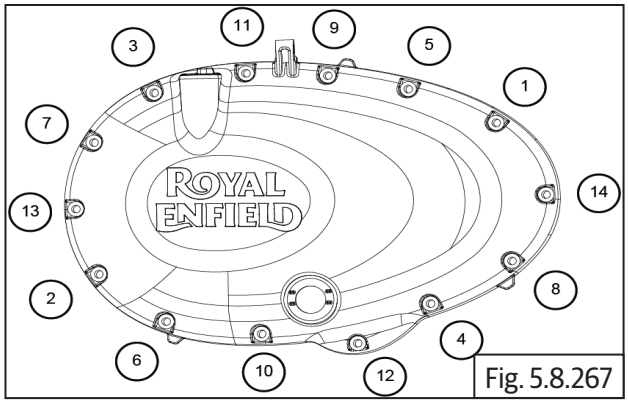

Fig. 5.8.267

	5 mm Allen socket with Torque wrench
Torque	10-12 N-m/1.0-1.2 kgf-m

- Assemble clutch release spring **(a)** on shaft with the "L" bend positioned against the lug **(b)** in clutch cover.

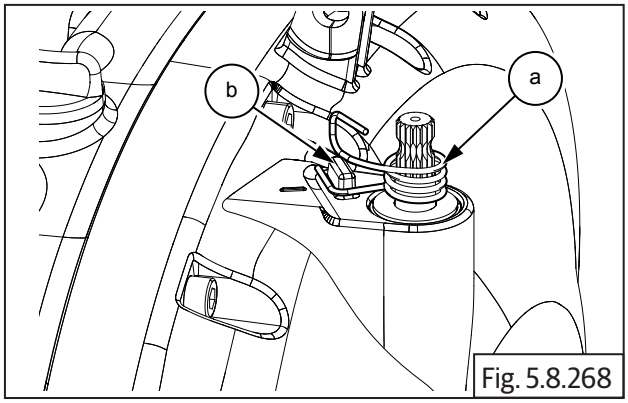

Fig. 5.8.268

- Rotate clutch shaft **(b)** clockwise till it stops. Ensure pinch bolt is sufficiently loose, position clutch lever on shaft at 11 'O' clock position and the inner side of the arm is aligned to the reference mark **(a)** on the clutch cover.

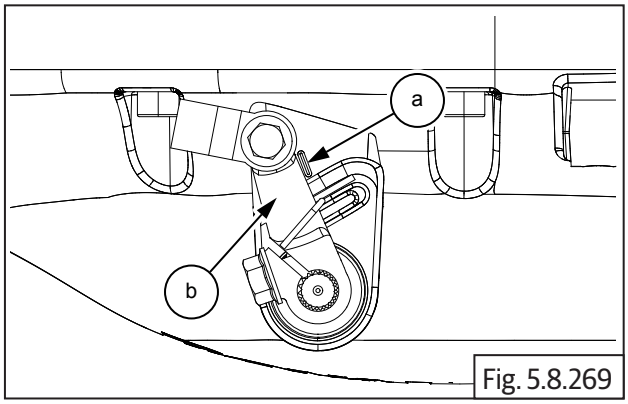

Fig. 5.8.269

- Tighten pinch bolt sufficiently such that the arm is firmly clamped on the shaft.
- Position the upper leg of the spring against the inside of the clutch release arm and check for proper spring action.

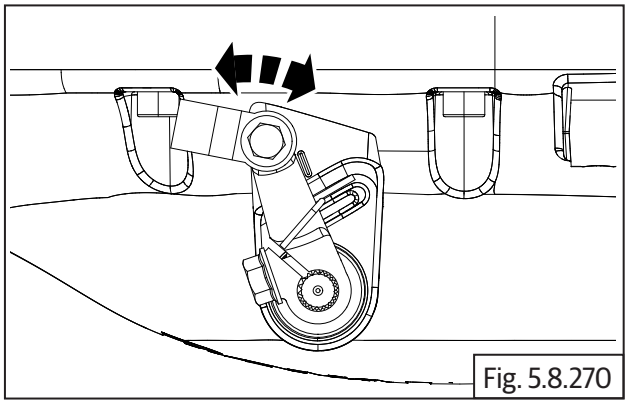
Fig. 5.8.270

5.8.43. Gear Position Sensor (GPS)

- Assemble gear position sensor on the LH side of lower crankcase duly ensuring the lug **(a)** in the GPS is located into the hole **(b)** in gear selector drum.

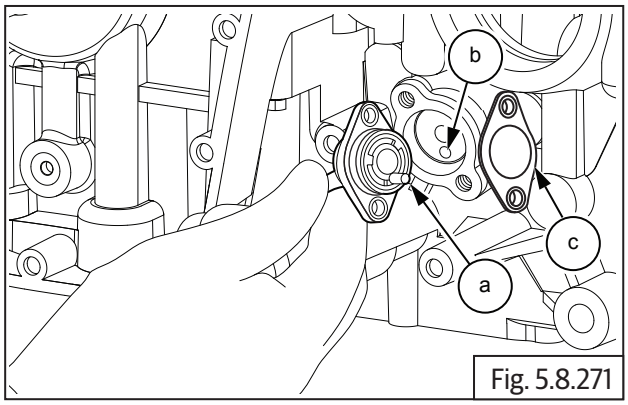

Fig. 5.8.271

- Position cable holder **(a)** over the GPS.

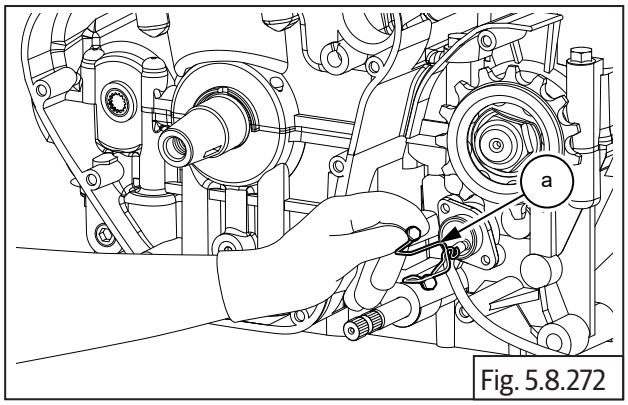

Fig. 5.8.272

- Assemble 2 Nos. Hex flange head bolts **(M6) (a)** on the cable holder and tighten cable holder and GPS to the crankcase on the LH side to specified torque.

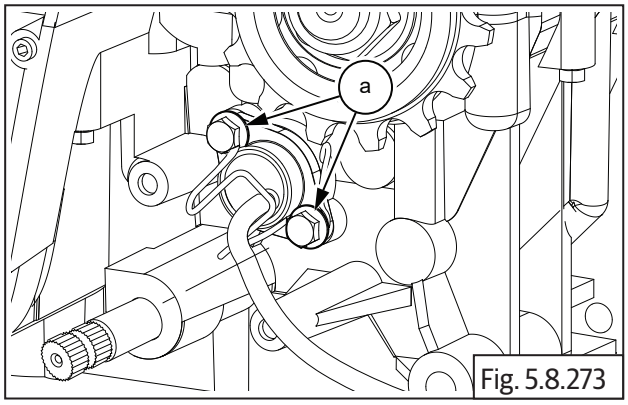

Fig. 5.8.273

	10 mm Socket with Torque wrench
Torque	10-12 N-m/1.0-1.2 kgf-m

NOTE
• *Replace Gasket whenever removed.*

5.8.44. FD Sprocket

- Assemble spacer **(a)** on drive shaft **(b)** on the LH side.

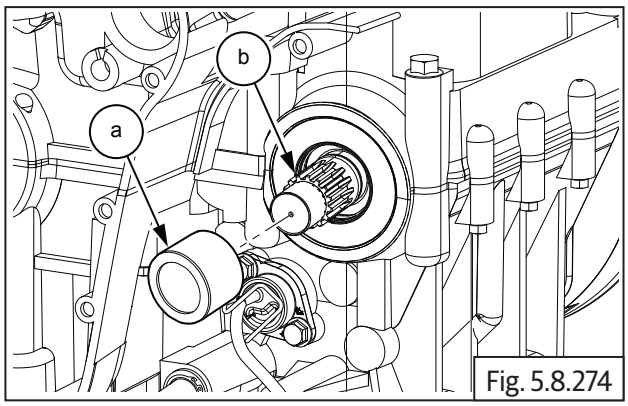

Fig. 5.8.274

- Locate oil seal **(a)** with its open end facing inwards on the crankcase on LH side and tap it in gently till the outer surface of the oil seal is flush with the crankcase **(b)**

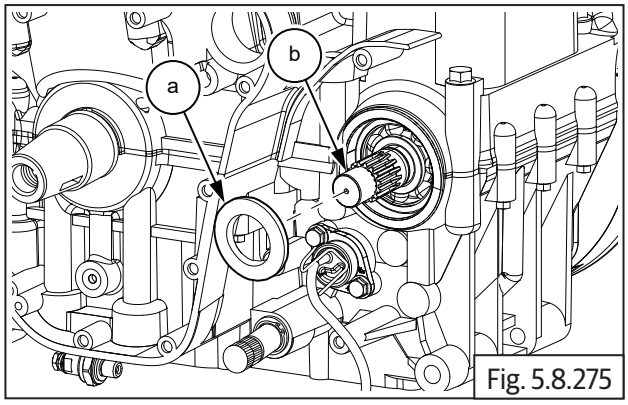

Fig. 5.8.275

- Assemble FD sprocket **(a)** on Counter shaft **(b)**.

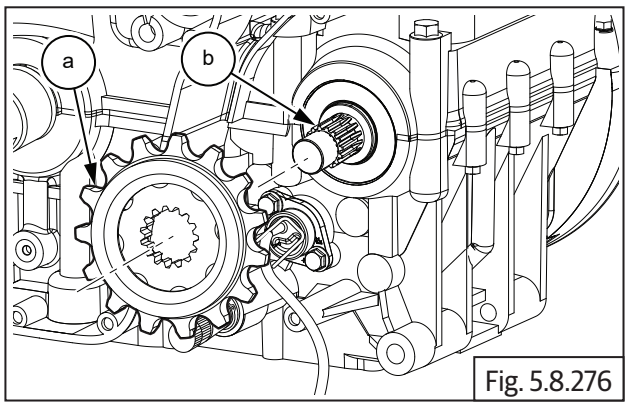

Fig. 5.8.276

- Install splined washer **(a)** on driveshaft **(b)**.

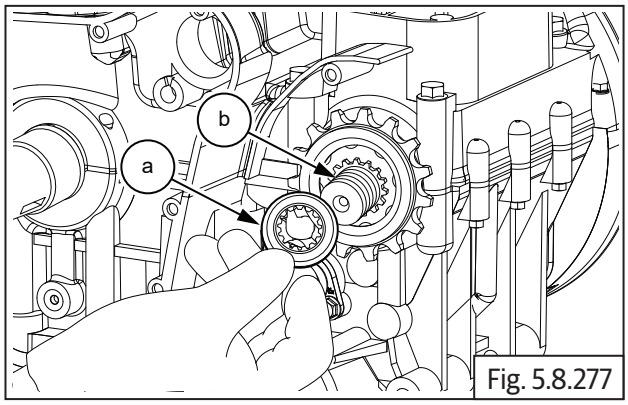

Fig. 5.8.277

- Assemble FD sprocket nut **(M20) (a)** on driveshaft .

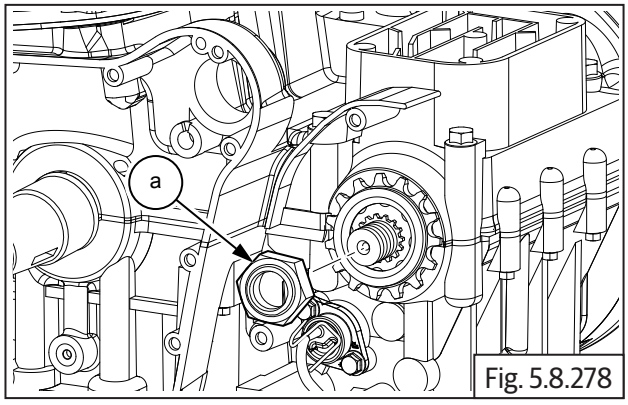

Fig. 5.8.278

- Locate special tool **(a)** over FD sprocket and tighten nut to specified torque.

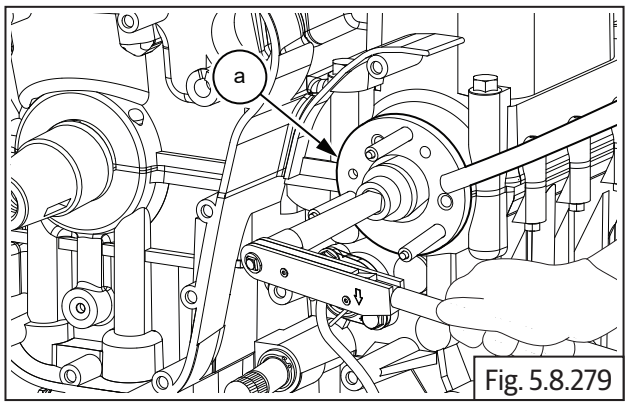

Fig. 5.8.279

SPL 	Part No: ST-27534-2
	Part Name: FD sprocket holder with Torque wrench
Torque	130-160 N-m/13.0-16.0 kgf-m

	30 mm Socket with Torque wrench

- Gently bend the tab washer **(a)** outer, to seat against a flat surface of the hex nut **(b)** with a flat chisel to prevent the nut from loosening during use.

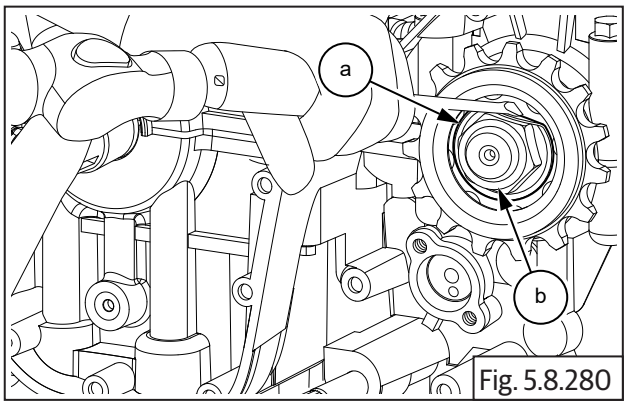

Fig. 5.8.280

	Chisel and Hammer

5.8.45. Magneto Cover Sub Assembly

Stator coil with CPS in Magneto cover

- Position stator coil **(a)** inside magneto cover such that .
  - The Crank position sensor is seated at its mounting location .
  - Magneto wires and grommet **(c)** are aligned to the slot on the top of the cover .
  - The stator mounting holes are aligned to the mounting holes in magneto cover.
- Locate 3 Nos. Hex socket head bolts **(M6) (b)** in the stator coil mounting holes and tighten evenly to specified torque.

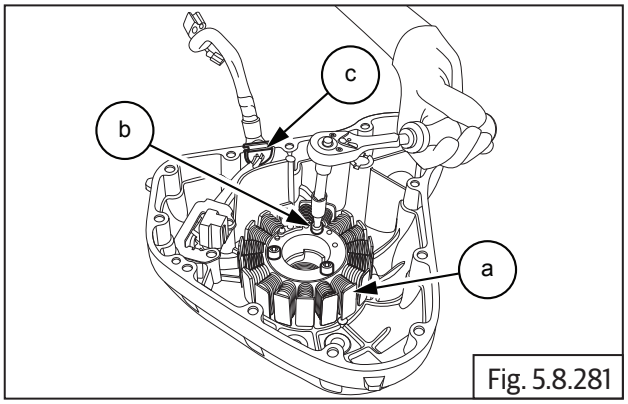

Fig. 5.8.281

	5 mm Allen socket with Ratchet
Torque	10-12 N-m/1.0-1.2 kgf-m

- Locate guide plate **(b)** over the CPS **(a)**, ensure the mounting holes of the guide plate, CPS are aligned to the mounting holes in magneto cover.
- Locate 2 Nos. Hex socket head screws **(M5) (c)** on the guide plate and tighten evenly to specified torque.

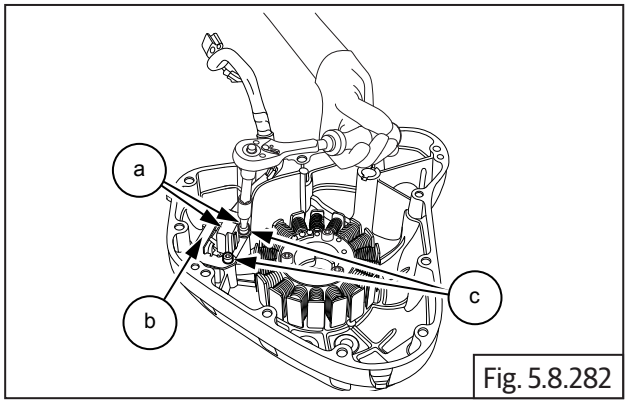

Fig. 5.8.282

	4 mm Allen socket with Ratchet
Torque	10-12 N-m/1.0-1.2 kgf-m

NOTE

- *Apply Loctite 5910 on the gromet assemby* ***(c)*** *before installation*

- Locate dowel pins **(a)** into crankcase.

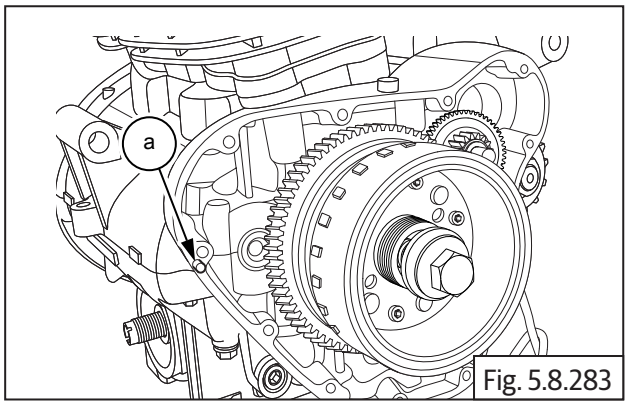

Fig. 5.8.283

- Install gasket **(a),** if necessary smear engine oil and ensure it is properly seated on dowels.

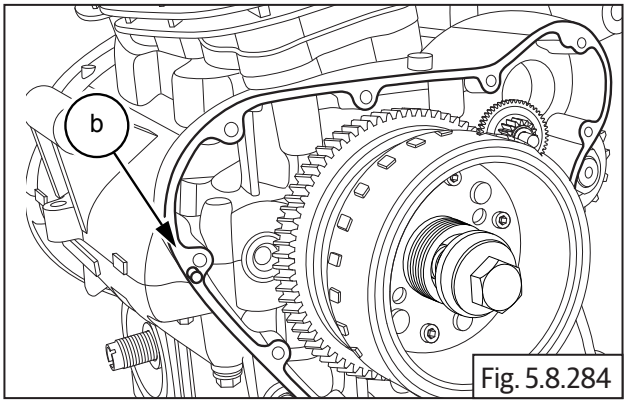

Fig. 5.8.284

NOTE

- *Apply Loctite 5910 on the marked location* **(b)**.

- Align the magneto cover such that the stator coils are located into the magneto rotor and ensure proper seating of the cover against the gasket.

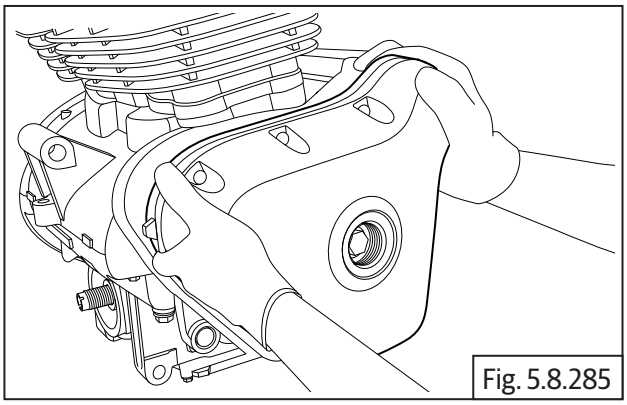
Fig. 5.8.285

⚠ CAUTION

Magnetic force from the rotor may cause misalignment of the cover during assembly. please ensure cover is centralized and seating properly before tightening the screws.

- Locate 12 Nos. Hex socket bolts **(M6) (a)** on magneto cover **(b)** and tighten it in a crisscross pattern.
- Tighten the bolts evenly to specified torque.

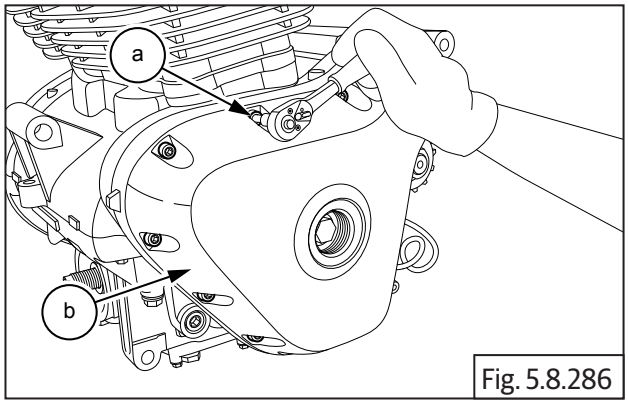

Fig. 5.8.286

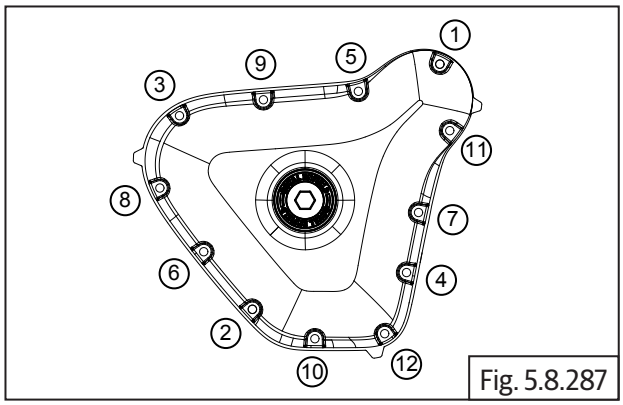

Fig. 5.8.287

	5 mm Allen socket with Ratchet
Torque	10-12 N-m/1.0-1.2 kgf-m

- Locate O-ring **(a)** on plug **(b)**.

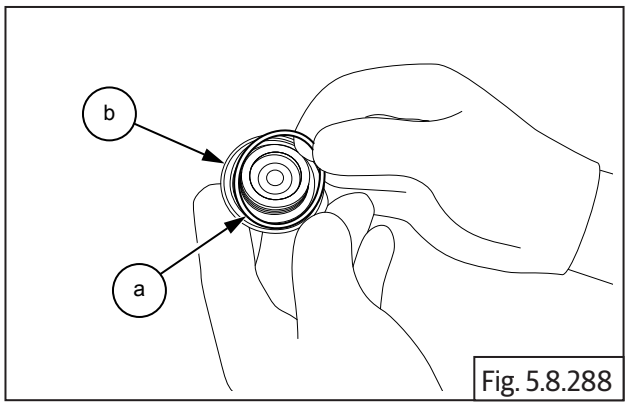

Fig. 5.8.288

NOTE
• *Replace the O ring with a new one whenever removed.* **DO NOT** *reuse.*

- Assemble plug **(M34) (a)** on center of magneto cover and tighten it to specified torque.

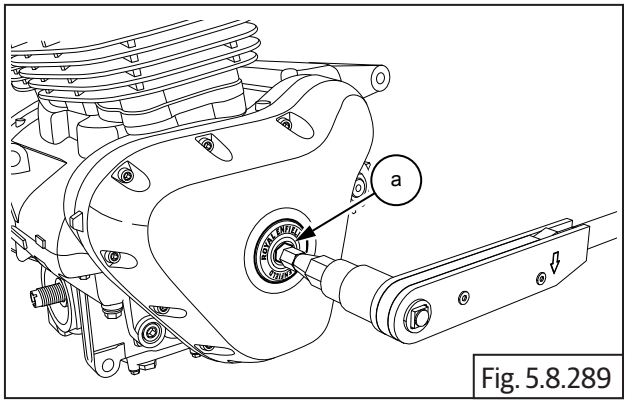

Fig. 5.8.289

	14 mm Allen socket with Ratchet
Torque	20-22 N-m/2.0-2.2 kgf-m

- Ensure the magneto and gear position sensor wiring is correctly routed through the crankcase assembly.

5.8.46. Starter Motor

NOTE
• *Do not tap on the starter motor. It may damage the internal parts.*
• *Inspect the starter drive shaft teeth for any wear-out OR damages.*
• *Replace the O Ring when removed. Do not reuse.*
• *Apply Loctite Silicon Lube in O Ring before Installation*
• *Apply Loctite 243 manually on the threads of the starter motor bolts before installation.*

- Locate starter motor **(a)** into the upper crankcase housing **(b)** LH.

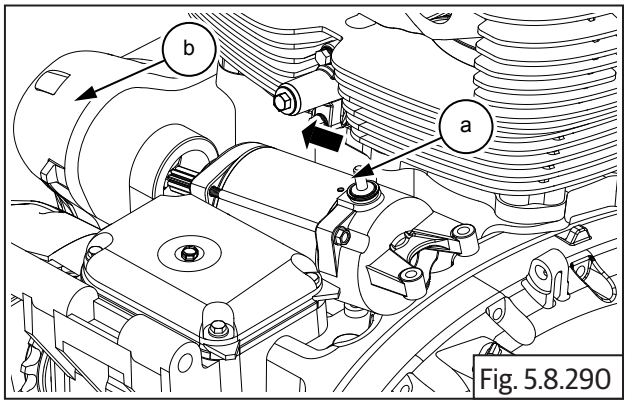

Fig. 5.8.290

- Locate and install 2 Nos. Hex head flange bolts **(M6) (a)** on starter motor **(b)**.

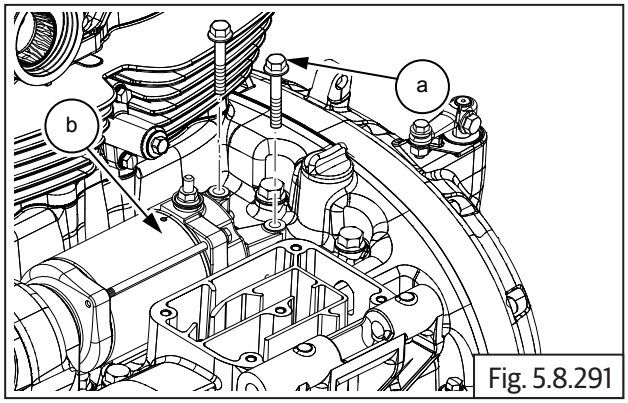

Fig. 5.8.291

	10 mm Socket with with torque wrench
Torque	10-12 N-m/1.0-1.2 kgf-m

5.8.47. Breather Box

- Locate gasket **(a)** on breather box cover **(b)** and assemble breather box cover on engine.

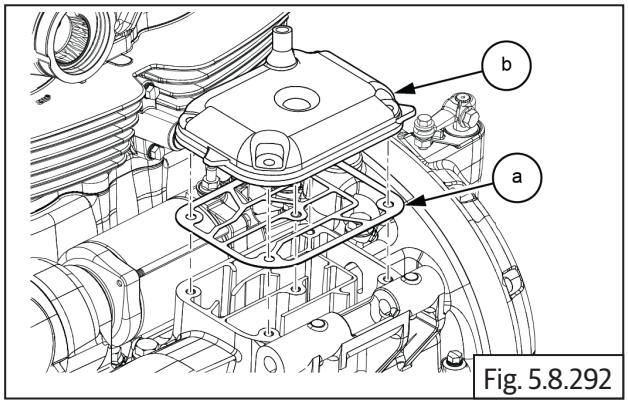

Fig. 5.8.292

- Install and tighten 5 Nos. Hex-head flange bolts **(M6) (a)** to specified torque.

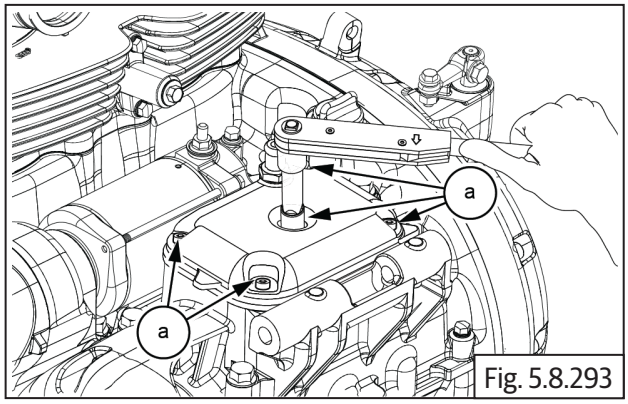

Fig. 5.8.293

	10 mm Socket with Torque wrench
Torque	10-12 N-m/1.0-1.2 kgf-m

- Fit breather hose **(a)** into intake manifold and install clamp.

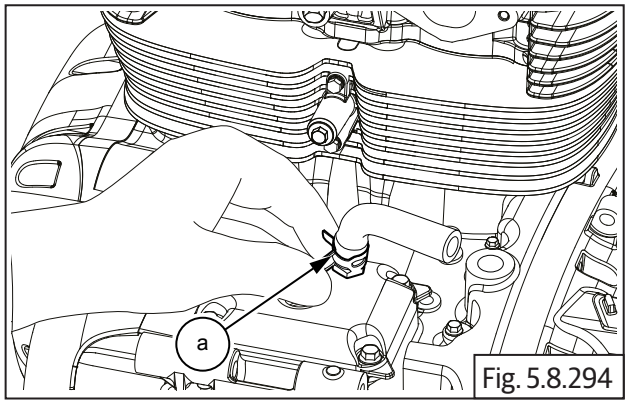

Fig. 5.8.294

5.8.48. Oil Filter

- Ensure O-ring **(a)** is seated properly over the oil filter **(b)**.
- Apply thin layer of fresh engine oil over O-ring.
- Assemble the oil filter union **(c)** .

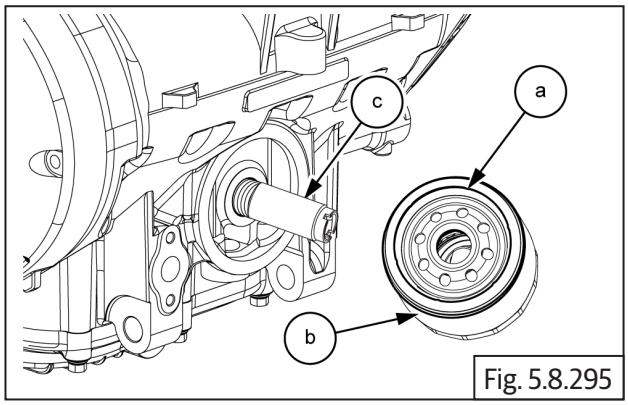

Fig. 5.8.295

SPL 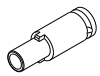	Part No: ST30293/a
	Part Name: Oil Filter Union Wrench

- Locate oil filter into crankcase.
- Tighten oil filter **(a)** using special tool **(b)** to specified torque.

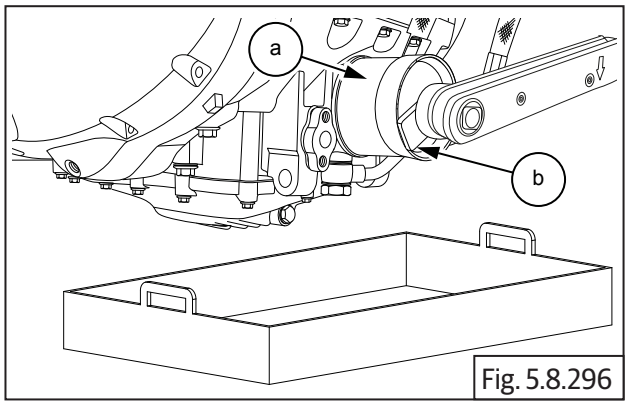

Fig. 5.8.296

SPL 	Part No: ST30294/a
	Part Name: Oil Filter wrench with Torque wrench
Torque	15 N-m/1.5 kgf-m (or) 360° Rotation

ENGINE TROUBLESHOOTING

5.9 Engine Troubleshooting

Symptom	Possible Cause	Diagnosis	How to Fix	Spec. Limit
Poor/Weak Compression	Spark plug is loose	Spark plug is not tightened to torque	Check and tighten spark plug to specified torque.	
		Threads are stripped OR damaged on spark plug OR cylinder head	Inspect spark plug tightening threads in cylinder head for wear-out/damage. Replace cylinder head assembly. Inspect spark plug threads for any damages OR wear-out. Replace spark plug.	
	No clearance between rocker arm and valve stem	Tappet is adjusted too tight (Causing valves to be partially open in TDC compression stroke)	Refer tappet adjustment. Adjust valve clearance as per specifications.	Inlet: 0.08mm Exaust: 0.18mm
	Valve(s) movement sticky in valve guide(s)	Valve stem is partially seized in valve guide	Check valve(s) for free movement in valve guide(s). Replace as required.	
		Valve stem(s) bent		
	Valve(s) stuck open after compression stroke (Valve timing)	Sprocket is incorrectly aligned to cam shaft	Check and align sprocket correctly on cam shaft.	
		Cam shaft rotation is partially seized (sticky) in cylinder head	Check cam shaft for free movement in cylinder head. Replace as required.	
	Cylinder head gasket leakage	Uneven head bolt torque	Remove and inspect cylinder head/cylinder barrel seating surfaces for warpage, damage, unevenness, etc. Replace cylinder head gasket and tighten cylinder head bolts to specified torque.	Warpage: 0.01mm Torque: 1st: 15Nm (1.5kgm) 2nd: 35Nm (3.5kgm) Angular torque: 150°.
		Uneven/damaged seating surface on cylinder head/cylinder barrel		

Symptom	Possible Cause	Diagnosis	How to Fix	Spec. Limit
Poor/Weak Compression	Piston rings are worn out	Excessive gap in piston rings at the end in cylinder barrel	Inspect piston rings and cylinder barrel for excessive wear out. Replace piston rings/piston with rings. Replace cylinder barrel assembly if cylinder barrel is worn out.	Top ring 1: 0.300m Top ring 2: 0.400mm
	Piston scuffed/ partially seized in cylinder barrel	Piston scuffed/ damaged/partially seized in cylinder barrel	Inspect cylinder barrel for damages/heavy scoring and replace piston assembly AND/OR cylinder barrel as required.	
Engine Overheating	Oil level is low	External oil leakage	Inspect all joints carefully for oil leaks and rectify.	
		Excess oil consumption	Check for smoke through exhaust in hot condition, inspect valve stem seals, valve stem to guide excess clearance, piston rings wear-out, and piston/ cylinder barrel wear-out/ damage. Repair/replace accordingly.	
	Engine oil is contaminated	Non recommend engine oil is used Metal particles found in oil	Drain oil, replace oil filter and fill fresh engine oil as per Royal Enfield recommendation.	Refill qty: 3.1 Liters / 0.82 Imperial gallon.
	Engine oil has lost viscosity	Engine oil is contaminated and too thin		
	Engine oil looks too black/highly viscous	Engine oil is not changed as per recommended maintenance schedule		Replace every 10000 km / 6000 miles / 12 months.

Symptom	Possible Cause	Diagnosis	How to Fix	Spec. Limit
Engine Overheating	Low engine oil pressure	Strainer is blocked	Remove oil sump cover and strainer, Clean/replace oil strainer. Replace oil filter and fill fresh engine oil as per Royal Enfield recommendation.	
		Poor delivery by oil pump	Check oil pressure, inspect oil pump for internal blocks OR wear out. Clean & replace oil pump as required. Replace oil filter and fill fresh engine oil as per Royal Enfield recommendation.	
	Poor cooling of oil	Oil cooler fins are clogged. Oil cooler pipes have internal blocks	Clean oil cooler fins & replace if fins are damaged excessively. Check oil cooler pipes for blocks & clean/replace pipes as required.	
	No clearance between rocker arm and valve stem	Tappet(s) adjusted is too tight (Causing valves to be partially open in TDC compression stroke)	Check and adjust tappet clearances to specifications.	Inlet: 0.08mm Exhaust: 0.18mm

Symptom	Possible Cause	Diagnosis	How to Fix	Spec. Limit
Engine Overheating	Partial seizure of Engine internals	Rocker arm(s)is partially seized (sticky) in spindle(s)	Check rocker arm(s) for free movement in spindle(s).	
		Cam shaft rotation is partially seized (sticky) in cylinder head	Check cam shaft for free movement in cylinder head.	
		Valve stem is partially seized (sticky) in valve guide	Check valve(s) for free movement in valve guide(s).	
		Piston is scuffed/ damaged/partially seized in cylinder barrel	Inspect cylinder barrel for damages/heavy scoring and replace piston assembly AND/OR cylinder barrel as required.	
		Connecting rod is partially seized in crank shaft assembly	Dismantle engine, inspect all internal parts, replace as required and reassemble engine.	
		Journal bearings/ crankshaft/balancer shafts are seized		
	Transmission drag	Bearings/Gear/Bushes in the shaft are seized	Dismantle engine, inspect all internal parts, replace as required and reassemble engine.	

Symptom	Possible Cause	Diagnosis	How to Fix	Spec. Limit
Excessive Engine Oil Consumption/ Smoke (Bluish White)	Excess oil in Engine	Engine oil is filled excessively	Drain and refill oil to correct specifications. Replace oil filter. Inspect and clean air box and breather hoses for excess oil.	Refill qty: 3.1 Liters / 0.82 Imperial gallon.
	Engine oil is contaminated	Engine oil is NOT as per Royal Enfield recommendation	Drain oil, replace oil filter and fill fresh engine oil as per Royal Enfield recommendation.	Replace every 10000 km / 6000 miles / 12 months.
	Engine oil looks too black/highly viscous	Engine oil is not changed as per recommended maintenance schedule	Drain oil, replace oil filter and fill fresh engine oil as per Royal Enfield recommendation.	Replace every 10000 km / 6000 miles / 12 months.
	Relief valve in oil pump malfunction	Remove and inspect oil pump relief valve	Remove oil pump and clean OR replace the relief valve.	
	Valve stem seal failure	Valve stem seal(s) is cracked OR loose in valve guide	Inspect Stem seals; if defective replace full set.	
	Valve stem to valve guide clearance is excess	Valve guides worn out excessively	Inspect valve stem guide. If the clearance is out of specification; replace head assembly.	Valve stem service limit: 0.012mm. Valve to guide max clearance: 0.212mm.
	Valve stem is scuffed/scored	Valve stem seal(s)is cracked OR worked loose from valve guide	Inspect Stem seals; if defective replace full set.	
	Piston rings are stuck in piston ring grooves	Wet/excessive carbon build up in ring grooves in piston/on rings	Release piston ring(s) carefully from piston ring groove(s), clean and replace with new rings. Inspect cylinder for damages.	

Symptom	Possible Cause	Diagnosis	How to Fix	Spec. Limit
Excessive Engine Oil Consumption/ Smoke (Bluish White)	Piston rings are worn out	Excessive gap in piston rings at the end in cylinder barrel	Inspect piston rings and cylinder barrel for excessive wear out. Replace piston rings/ piston with rings. Replace cylinder barrel assembly if cylinder barrel is worn out.	Top ring 1: 0.300mm Top ring 2: 0.400mm Cylinder barrel/ Piston max clearance: 0.060mm
	Piston is seized in cylinder barrel	Piston is scuffed, damaged OR partially seized in cylinder barrel	Inspect cylinder barrel for damages/heavy scoring and replace piston assembly AND/OR cylinder barrel if required.	
	Partial seizure of engine internals	Connecting rod is partially seized in crank shaft assembly	Dismantle engine, inspect all internal parts, replace as required and reassemble engine.	
		Journal bearings/ crankshaft/balancer shafts are seized		

Symptom	Possible Cause	Diagnosis	How to Fix	Spec. Limit
Engine Noise Top End	Exhaust gas leak between cylinder head and exhaust pipe	Exhaust pipe(s) flange mounting nuts are loose AND/OR seal is deformed OR damaged	Dismantle exhaust pipe(s) from cylinder head; replace gasket and tighten flange mounting to specified torque.	
	Tappet adjuster(s)is worn out	"Elephant foot" on tappet adjuster(s)is worn out/pitted	Inspect “Elephant foot” and replace if worn-out OR damaged.	Inlet: 0.08mm Exhaust: 0.18mm
	Excessive clearance between rocker arm and valve stem	Tappet(s)is adjusted too loose	Check and adjust tappet clearances to specifications.	
	Rocker arm(s) movement is sticky	Rocker arm(s) is partially seized (sticky) in spindle(s)	Inspect rocker arm spindle for scoring OR damage. Inspect rocker arm spindle clearance and replace if required.	
	Rocker arm(s) has excessive clearance in spindle(s)	Rocker arm(s) and spindle(s)are worn out	Inspect and replace rocker arms set along with spindle(s).	Max clearance 0.134mm
	Excessive wear-out of Camshaft journals	Camshaft journal is partially seized OR scored	Inspect and replace cylinder head.	
	Cam chain is making noise	Cam chain/cam chain pads/cam shaft sprocket is worn-out	Inspect cam shaft sprocket, cam chain, chain pads, cam chain tensioner and replace affected parts.	
	Valve springs are damaged	Valve springs are loose OR broken	Inspect valve springs and replace full set.	

Symptom	Possible Cause	Diagnosis	How to Fix	Spec. Limit
Engine Noise Top End	Valve stem to valve guide clearance is excess	Valve stem guides are worn out excessively	Inspect valve stem guide. If the clearance is out of specs; replace the head assembly.	Max clearance 0.66mm
	Valve stem(s)is partially seized (sticky) in valve guide(s)	Inspect valve stem and guides for free movement in valve guide(s)	If the movement is not as per specs, replace the valve stem and guide.	
	Valve seat insert is loose in cylinder head	Inspect valve seat inserts for damages	Dismantle cylinder head & valves and replace.	

Symptom	Possible Cause	Diagnosis	How to Fix	Spec. Limit
Engine Noise Middle	Cam chain tensioner is defective	Cam chain tensioner spring/cam chain pad are worn-out OR broken	Replace cam chain tensioner pad assembly.	
	Piston rings are stuck in piston groove	Wet/excessive carbon is build up in the ring grooves in piston/on rings	Release piston ring(s) carefully from piston ring groove(s), clean and replace with new rings.	
	Piston rings are worn out	Excessive gap in piston rings at the end in cylinder barrel	Inspect piston rings and cylinder barrel for excessive wear out. Replace piston rings/ piston with rings. Replace cylinder barrel assembly if cylinder barrel is worn out.	Top ring 1: 0.300mm Top ring 2: 0.400mm
	Excessive clearance between Piston and barrel	Inspect Piston to Barrel clearance for given specs	Replace entire set of cylinder piston and barrel assembly.	Max dia of piston working area in cylinder: 78.030mm Piston min dia: 77.940mm
	Connecting rod small end to piston pin clearance is excess	Remove and inspect if the piston pin is loose OR scored OR seized	Replace the piston pin AND/OR connecting rod as required.	
	Connecting rod is bent	Remove and inspect valve timing; check if valve is stuck OR damaged and if the connecting rod is bent OR twisted	Replace the connecting rod AND/OR stem valve and affected parts.	

Symptom	Possible Cause	Diagnosis	How to Fix	Spec. Limit
Engine Noise Bottom	Crankshaft journal bearing is worn-out/ partially seized	Remove and inspect the bearing code and crankshaft. Check for scores OR seizures	Refer the crank shaft journal bearing code selection chart. Check the oil gallery. Replace the journal bearings and crankshaft if required.	
	Connecting rod big end journal bearing is worn-out/partially seized	Remove and inspect oil circulation and the connecting rod bigger end bearing	Refer the connecting rod bearing code selection chart. Check and replace the connecting rod big end bearing.	
	Balancer shaft journal bearing is worn-out/ partially seized	Remove and inspect the balancer shaft and journal bearing	Refer balancer shaft bearing code selection chart. Check and replace the balancer shaft bearing and replace if defective.	
	Clutch slipper spring is deformed OR broken	Remove and inspect clutch slipper spring for breakage	Replace the clutch slipper spring if worn-out.	
	Clutch outer hub collar bush/ needle bearing is defective	Remove and inspect if the clutch outer hub collar bush/needle bearing is worn out	Replace the affected parts.	
	Clutch friction plate lugs/clutch outer hub slots are defective	Remove and inspect if clutch friction plate lugs/clutch outer hub slots are worn-out OR damaged	Check and replace the friction plates and affected parts.	
	Drive shaft bearing is worn out	Remove and inspect for noisy drive shaft bearing OR excess play	Check and replace the bearing/drive shaft assembly.	

Symptom	Possible Cause	Diagnosis	How to Fix	Spec. Limit
Engine Noise Bottom	Drive shaft bush is worn out	Remove and inspect for drive shaft bush wear-out OR excess play	Check and replace the bush and shaft if worn out.	
	Counter shaft bearing is worn out	Remove and inspect for the noisy counter shaft bearing	Check and replace the counter shaft bearing and shaft if worn out.	
	Counter shaft bush is worn out	Remove and inspect counter shaft bush for any wear-out OR excess play	Check and replace the counter shaft bush and shaft if worn out.	
	Excessive clearance between splines and gears	Remove and inspect splines and gears for any wear-out OR excess play	Check and replace the gear splines and gears.	

Symptom	Possible Cause	Diagnosis	How to Fix	Spec. Limit
Engine Vibration	Engine mounting fasteners to main/cradle frame are loose	Check all mounting fasteners for looseness/stripped OR washed out threads/ broken mountings/ fasteners	Ensure engine mounting fasteners are tightened at specified torque to the main/cradle frame. Check the mounting for any cracks OR damages. Check if the adjuster and bush are as per specifications.	
	Engine steady bracket is loose	Check fasteners for looseness/stripped/ washed out threads/ broken mountings/ fasteners	Ensure engine steady bracket mounting is free of cracks. Ensure that fasteners are tightened to main frame to the specified torque.	
	Silencer mounting is loose	Inspect silencer (LH/ RH) mountings, mounting cub washers and brackets for cracks OR loose ends. Inspect if tightening torque with cylinder head and silencer pipe brackets to frame torque is as per specs	Ensure silencer (LH/ RH) mountings points, mounting cub washers and brackets are free of cracks OR loose ends. Tighten all mounting fasteners to specified torque. Ensure exhaust pipe mounting flange nuts are correctly tightened to cylinder head.	
	Foot pegs are loose	Check foot peg mounting fasteners for looseness/stripping/ washed out threads/ broken fasteners	Tighten foot pegs to specified torque and replace defective parts.	
	Balancer shaft/ crankshaft run-out	Dismantle engine and check balancer shaft for any run out/ bearings damage	Replace affected bearings/ balancer shaft.	

Symptom	Possible Cause	Diagnosis	How to Fix	Spec. Limit
Clutch is Spongy/Soft	Clutch inner cable is partially damaged	Inspect clutch cable top & bottom ends for damaged inner cable	Replace Clutch cable.	
	Clutch has excess free play	Clutch cable free play is more than specs at handle bar end	Adjust clutch free play to 2-3mm.	2-3 mm
	Engine oil has lost viscosity	Check if engine oil is contaminated and too thin	Drain oil, replace oil filter and fill fresh engine oil as per Royal Enfield recommendation.	Replace every 10000 km / 6000 miles / 12 months.
	Clutch activating lever assembly is loose on clutch shaft	Check if clutch lever clamping bolts are loose	Tighten clamping bolt on clutch lever as per specs.	
		Inspect splines on clutch shaft and lever for splines damage/ worn out	Replace clutch lever and shaft.	
	Clutch springs are weak	Inspect clutch release springs for pre-setting/length reduction	Inspect clutch springs for correct free length and replace if out of specs.	
	Clutch springs are broken	Inspect clutch springs for any damages	Replace clutch springs.	
	Clutch friction plates have become soggy	Inspect clutch friction plate material for softness/damages/ puffed up condition	Replace clutch friction plate/steel plates.	
	Clutch center/ hub is worn out	Inspect clutch center and hub splines area for damages/wear out	Replace clutch assembly.	
	Clutch assembly center nut is loose	Inspect if clutch center fixing nut is loose/ threads are washed out	Replace nut/main shaft.	

Symptom	Possible Cause	Diagnosis	How to Fix	Spec. Limit
Clutch is Hard	Clutch inner cable is stuck/ has hard movement in outer cable	Inspect inner clutch cable for free movement in outer cable	Lubricate clutch cable and inspect for free movement. If problem still exists, replace clutch cable.	
	No free play in clutch lever at handle bar end	Clutch cable free play is less than specs	Adjust clutch free play to 2-3mm.	2-3 mm
	Engine is contaminated	Engine oil is not changed as per recommended maintenance schedule OR Engine oil is NOT as per Royal Enfield recommendation	Drain oil, replace oil filter and fill fresh engine oil as per Royal Enfield recommendation.	Replace every 10000 km / 6000 miles / 12 months.
	Excess Oil in Engine	Engine oil is filled excessively	Drain and refill oil to correct specifications.	
	Clutch lever movement is sticky in cover RH	Check free movement of clutch shaft in cover RH	Remove clutch shaft from cover RH, inspect, lubricate and reassemble.	
		Check if clutch shaft is seized in cover RH	Replace clutch shaft in cover RH.	

Symptom	Possible Cause	Diagnosis	How to Fix	Spec. Limit
Clutch Slip	Clutch has excess free play	Inspect clutch cable top & bottom ends for frayed strands of the inner cable	Replace clutch cab;e if damaged. Adjust clutch free play to 2-3mm.	2-3 mm
	Clutch lever movement is sticky in cover RH	Check free movement of clutch shaft in cover RH	Remove clutch shaft from cover RH, inspect, lubricate and reassemble.	
		Check if clutch shaft is seized in cover RH	Replace clutch shaft in cover RH.	
	Clutch springs are weak	Inspect clutch release springs for presetting/ length reduction	Replace if out of specs.	
	Clutch springs are broken	Inspect clutch springs for any damages	Replace clutch springs.	
	Clutch friction plates have become soggy	Inspect clutch friction plate material for softness/damages/ puffed up condition	Replace clutch friction plate/steel plates.	
	Clutch center/ hub is worn out	Inspect clutch center and hub spline area for damages/wear out	Replace clutch assembly.	
	Clutch assembly center nut is loose	Inspect if clutch center fixing nut is loose/ threads are washed out	Replace nut/main shaft.	

Symptom	Possible Cause	Diagnosis	How to Fix	Spec. Limit
Clutch juddering	Clutch cable is brittle	Inspect clutch cable top & bottom ends for frayed strands of the inner cable	Replace clutch cable.	
	Clutch lever movement is sticky in cover RH	Check free movement of clutch shaft in cover RH	Remove clutch shaft from cover RH, inspect, lubricate and reassemble.	
		Check if clutch shaft is seized in cover RH	Replace clutch shaft in cover RH.	
	Uneven wear of clutch friction plates	Friction plates OR steel plates are worn-out, warped OR dragging	Remove clutch friction and steel plates. Inspect, lubricate and reassemble. Replace if necessary.	
	Clutch steel plate movement on clutch hub is abrupt			
	Clutch steel plate warped	Check if steel plate is warped OR worn-out	Remove clutch steel plates, inspect, lubricate and reassemble. Replace if necessary.	
	Clutch judder spring is broken	Inspect clutch judder springs for damage	Replace clutch judder springs.	
	Clutch release spring is sticky	Inspect if the clutch release spring is not releasing properly	Remove, inspect and replace.	
Noise in Clutch	Clutch Spring is broken	Inspect if the clutch is also broken	Replace the spring and clutch if required.	
	Clutch outer hub collar bush/ needle bearing is worn-out	Inspect if Clutch outer hub collar bush/needle bearing for damages	Replace hub collar bush AND/OR needle bearing.	
	Clutch friction plate lugs/clutch outer hub slots are worn out	Inspect clutch friction plate and outer hub for damages	Replace Clutch friction plate lugs AND/OR clutch outer hub.	

Symptom	Possible Cause	Diagnosis	How to Fix	Spec. Limit
Down-Shift/Up-Shift Travel Is Excessive	Gear link is defective	Inspect if the gear link is worn out	Remove, lubricate link and reassemble. Replace if necessary.	
	Gear link adjustment is incorrect	Inspect if gear lever link adjustment is to the specs	Adjust the gear lever link to the specs. Replace if required.	
Gear is Hard to Shift	Gear shift stopper is defective	Inspect gear shift stopper roller for wear-out/damage	Remove and lubricate shifter and reassemble. Replace if necessary.	
	Gear shift stopper spring is defective	Inspect gear shift spring for preset/ breakage	Replace the spring.	
Gear is Under Engaging	Gear link adjustment is incorrect	Inspect if gear lever link adjustment is to the specs	Adjust the gear lever link to the specs. Replace if required.	
	Gear shift stopper movement is sticky	Remove and inspect shift stopper and pin for damage OR wear-out	Replace the shift stopper AND/OR pin.	
	Shifter fork movement is sticky	Inspect if shifter fork has sticky movement in spindle/selector drum	Replace the shifter fork.	

Symptom	Possible Cause	Diagnosis	How to Fix	Spec. Limit
Gear Engagement is Hard	Oil level is low/ engine oil has lost viscosity	Engine oil is contaminated and too thin	Drain oil, replace oil filter and fill fresh engine oil as per Royal Enfield recommendation.	
	Excessive clutch free play	Clutch cable free play is more than specs at handle bar end	Adjust free play and replace clutch cable if necessary.	
	Gear shaft is bent	Inspect if the gear shaft is sticky OR bent	Replace gear shaft.	
	Shifter fork movement and selector drum are sticky	Inspect shifter fork free movement in selector drum	Replace the selector drum.	
	Sliding gear movement on counter-shaft/ drive shaft is sticky	Inspect if gear sliding is sticky	Replace sliding gears on counter shaft and drive shaft.	
	Gear shift stopper movement is sticky	Inspect if shifter fork stopper is worn-out	Remove, lubricate and reassemble shifter fork. Replace if necessary.	
	Gear shift shaft is bent/stuck	Remove and inspect shaft run-out	Replace gear shaft.	
Gear Engages and Slips	Gear shift stopper is worn-out	Inspect gear shift stopper	Remove, lubricate shifter and reassemble. Replace if necessary.	
	Gear shift stopper spring is broken	Inspect gear shift spring for preset/ breakage	Check and Replace the spring.	
	Gear link adjustment is incorrect	Inspect if gear lever link adjustment is to the specs	Adjust the gear lever link to the specs. Replace if required.	
	Sliding gear dogs are worn-out	Inspect sliding gear dogs	Remove and replace if necessary.	

Symptom	Possible Cause	Diagnosis	How to Fix	Spec. Limit
Gear is not Engaging	Engine oil has lost viscosity	Engine oil is contaminated and too thin	Drain oil, replace oil filter and fill fresh engine oil as per Royal Enfield recommendation.	
	Gear teeth are broken	Inspect gear teeth	Remove, inspect and replace gear and affected parts.	
	Gear shift stopper is jammed	Inspect the movement of the stopper	Remove, inspect and replace the stopper id necessary.	
	Selector fork is jammed on spindle	Remove and check the fork in the drum	Check, lubricate and reassemble OR replace if required.	
	Selector fork is jammed in selector drum	Check for free traveling of the fork in the selector drum	Replace the drum and affected parts.	
	Gear shift shaft is bent/stuck	Dismantle and check the run-out	Replace the gear selector shaft.	
Gear Lever is not Returning After Shifting	Gear shift shaft spring is broken	Check operation of gear selector shaft spring AND/OR lock	Remove and replace the spring.	
	Gear shift shaft is bent/stuck	Inspect gear shift shaft guide movement	Replace gear shift shaft and affected parts.	

Symptom	Possible Cause	Diagnosis	How to Fix	Spec. Limit
Noise in Gear Box	Engine oil has lost viscosity	Engine oil is contaminated and too thin	Drain oil, replace oil filter and fill fresh engine oil as per Royal Enfield recommendation.	
	Gear teeth are broken	Inspect gear teeth	Remove, inspect and replace gear and affected parts.	
	Drive shaft bearing is worn-out	Check the bearing sound and wear-out	Dismantle, inspect the drive shaft bearing and replace.	
	Drive shaft bush is worn out	Check the bush play and seating	Remove, inspect and replace drive shaft push.	
	Counter shaft bearing is worn out	Check if the counter shaft bearing has excess play	Remove, inspect and replace counter shaft bearing and shaft if required.	
	Counter shaft bush is worn out	Check if the counter shaft bush is worn-out OR has excess play	Remove, inspect and replace counter shaft bush and shaft if required.	
	Excessive clearance between splines and gears	Check if clearance is as per specifications	Remove, inspect and replace the affected parts.	

AIR FILTER BOX ASSEMBLY

CONTENTS PAGE

6.1 Air Filter Box Assembly 346

Dismantling..... 346

6.1.1 Air Filter Element 346

6.1.2 Air Filter Box Assembly 346

Inspection 350

Assembly 351

6.1.3. Air Filter Box Assembly 351

6.1.4 Air Filter Element 354

Troubleshooting..... 355

6.1 Air Filter Box Assembly

Dismantling

6.1.1 Air Filter Element

⚠ CAUTION
Ensure the motorcycle is upright on a firm and flat surface.

- Ensure ignition switch and engine stop switch are in OFF position.
- Remove the Side panel LH.
- loosen and remove 3 Nos. pan head screws **(a)** from air filter box assembly.

NOTE
• *DO NOT tap or apply excessive force on the screws.*

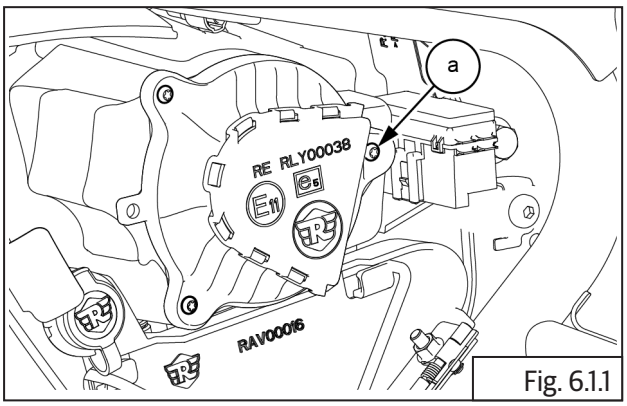

Fig. 6.1.1

	Phillips screw driver

- Remove air filter element cover **(b)** from air filter box assembly.
- Gently pull out air filter element **(a)** from air filter box assembly.

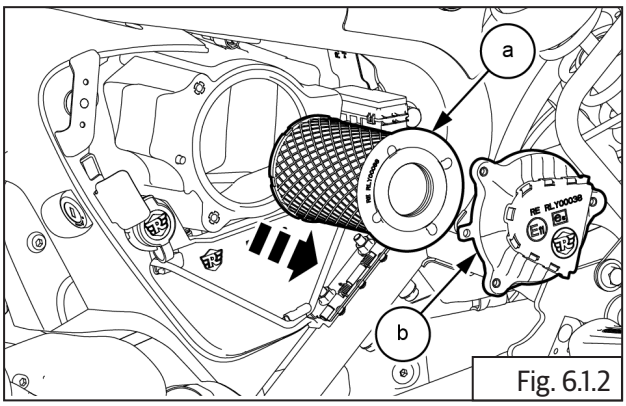

Fig. 6.1.2

6.1.2 Air Filter Box Assembly

- Ensure ignition switch and engine stop switch are in OFF position.
- Remove the Pillion seat.
- Remove the Rider seat.
- Remove the Side panel RH.
- Remove the Side panel LH.

⚠ WARNING
Gasoline is extremely flammable and highly explosive. Improper handling can lead to fatal accident or serious injury.

- Disconnect Battery terminals and remove battery.
- Loosen and remove 6 Nos. allen head screws **(M5) (a)** from LH and RH side throttle body cover.
- Remove the both covers **(b)** from throttle body.

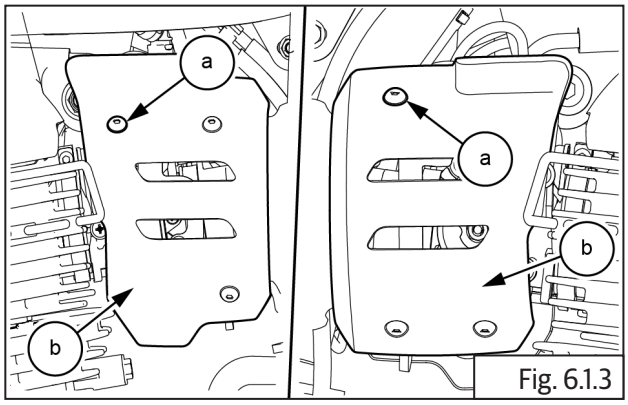

Fig. 6.1.3

	4 mm Allen Socket with Ratchet

- Loosen and remove 2Nos button head bolts **(a) (M6)** from LH side infil panel.

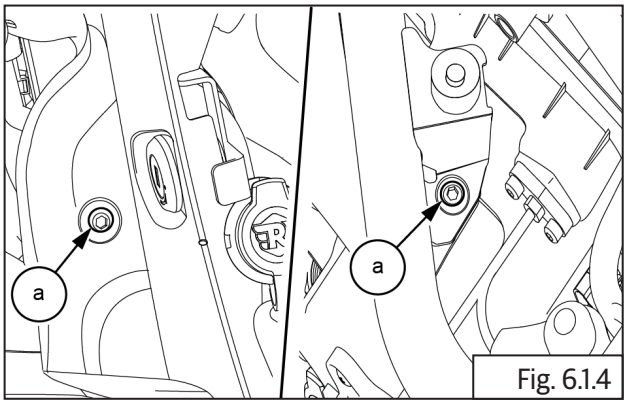

Fig. 6.1.4

	5 mm Allen Socket with Ratchet

- Loosen and remove 2Nos hex bolts with nut **(a) (M6)** from side panel.

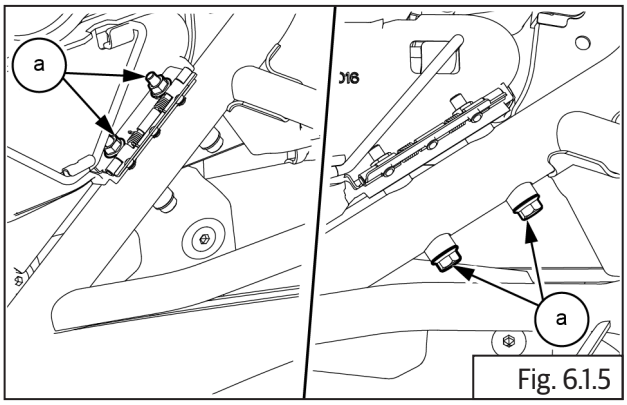

Fig. 6.1.5

	10 mm Socket with Ratchet

- Disconnect USB port **(a)** wiring coupler.

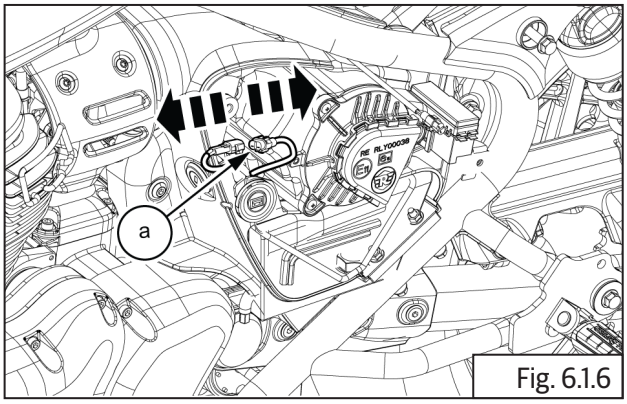

Fig. 6.1.6

- Remove the LH side infill panel **(a)** from frame.

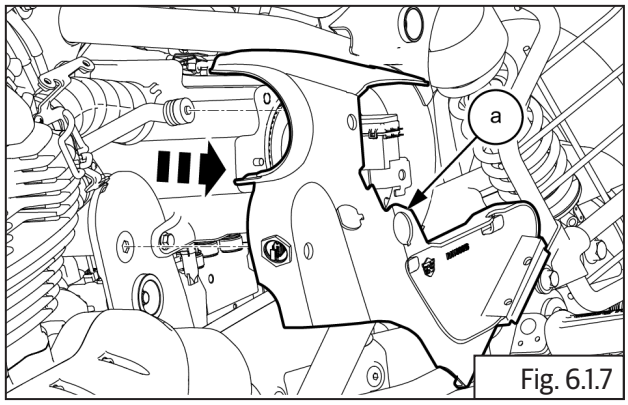

Fig. 6.1.7

- Loosen and remove 2Nos button head bolts **(a) (M6)** from RH side infill panel.

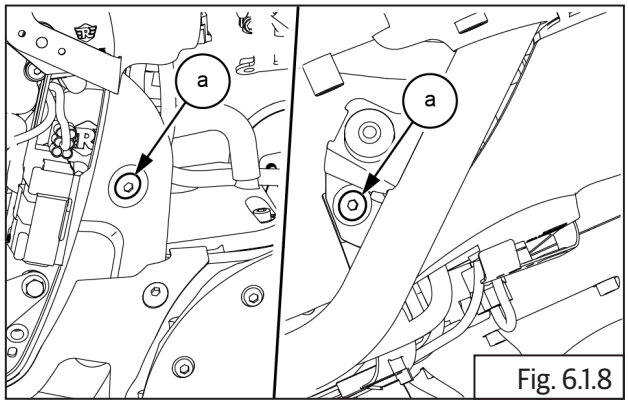

Fig. 6.1.8

	5 mm Allen Socket with Ratchet

- Remove the RH side infill panel **(a)** from frame.

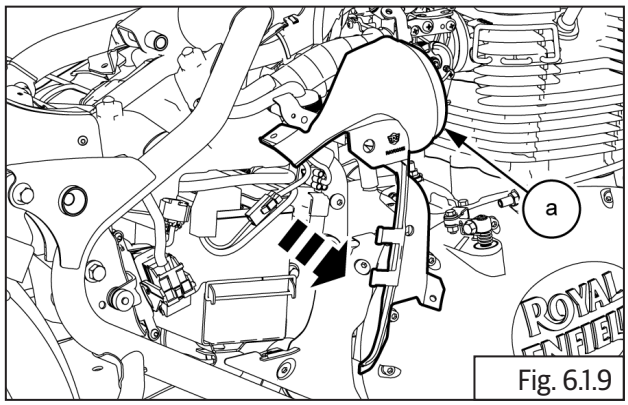

Fig. 6.1.9

- Remove the diagnostic coupler **(a)** from RH air filter housing.

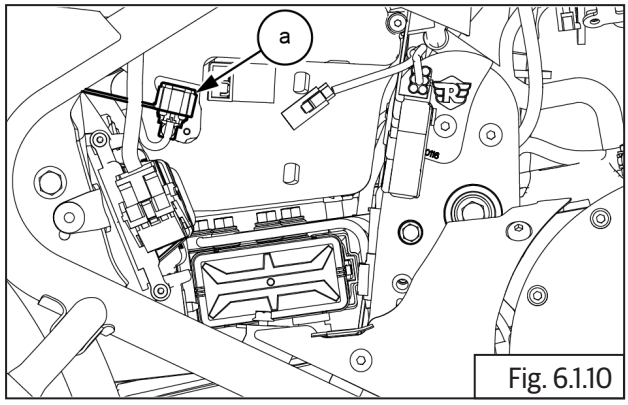

Fig. 6.1.10

- Remove the breather chamber hose **(a)** from air filter housing.

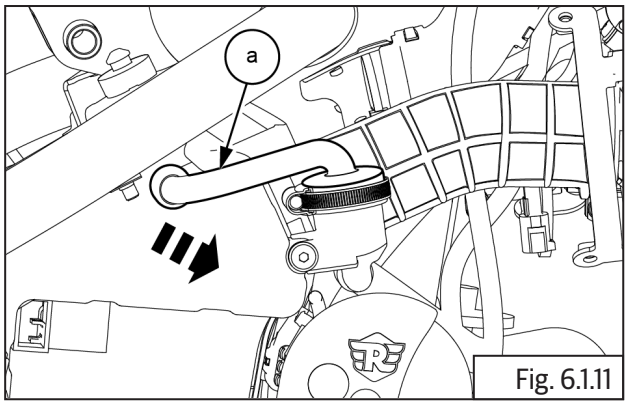

Fig. 6.1.11

- Remove the breather hose **(a)** from LH air filter housing.

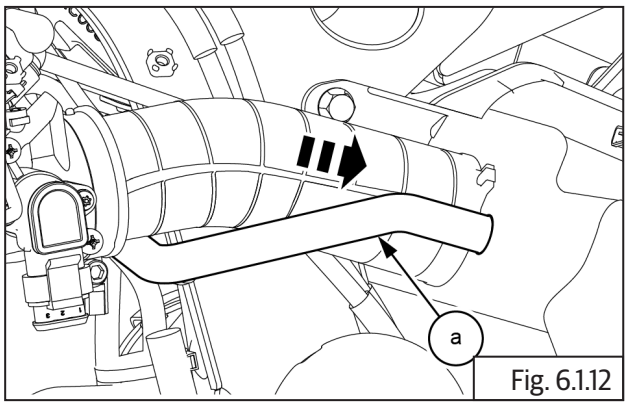

Fig. 6.1.12

- Loosen and remove 1 Nos button head bolt **(M5) (a)** from oil separator.

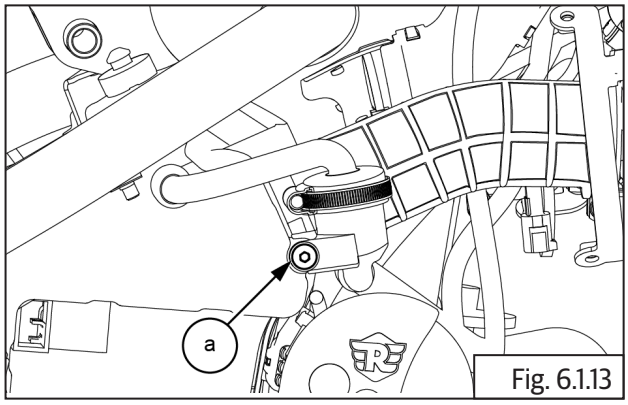

Fig. 6.1.13

	4 mm Allen Socket with Ratchet

- Disconnect intake air temperature sensor wiring coupler **(a)**.

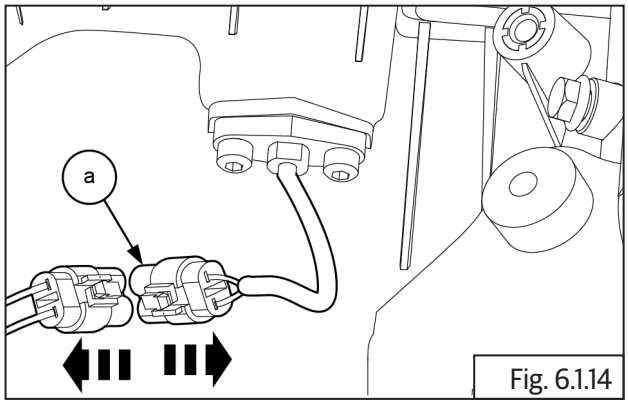

Fig. 6.1.14

- Loosen and remove 1 Nos Hex bolts **(a) (M6)** air filter housing top mounting bolts.

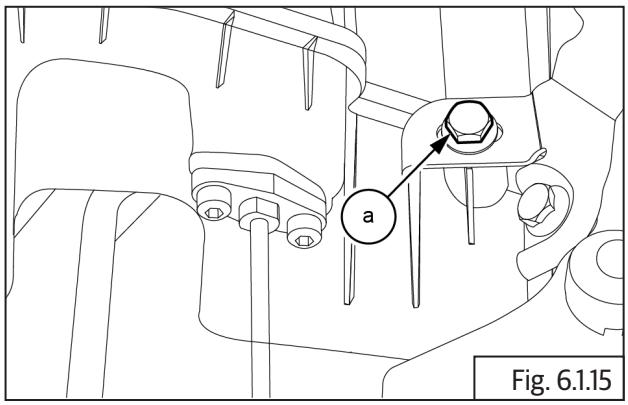

Fig. 6.1.15

	10 mm Socket with Ratchet

- Loosen and remove 2 Nos Hex bolts **(a) (M6)** from air filter housing LH mounting bolts.

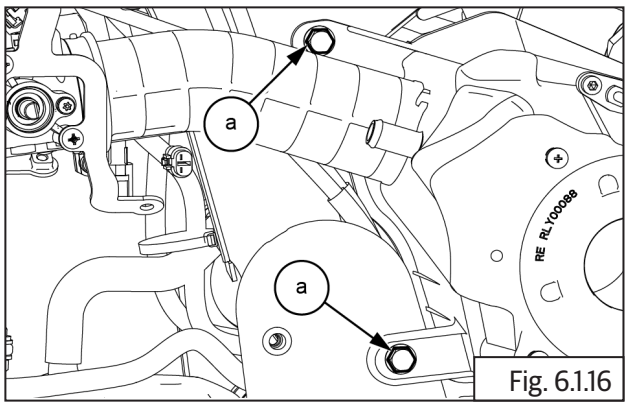

Fig. 6.1.16

	10 mm Socket with Ratchet

- Loosen 2 Nos. Hex socket screws **(M5) (a)** sufficiently on the worm clips **(b)** on the LH and RH bellows between throttle body and air filter box assembly.

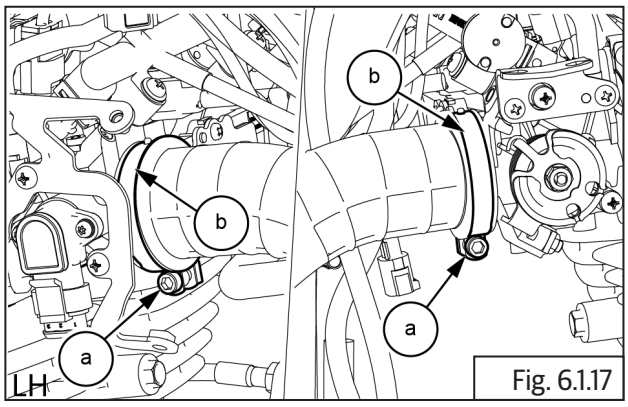

Fig. 6.1.17

	4 mm Allen Socket with Ratchet

- Ensure worm clips on inlet bellows are sufficiently loose and bellows are not stuck on throttle body.
- Gently remove air filter box assembly **(a)** from frame by pulling to the rear to release the bellows from the throttle body.
- Take out the air filter body towards LH side.

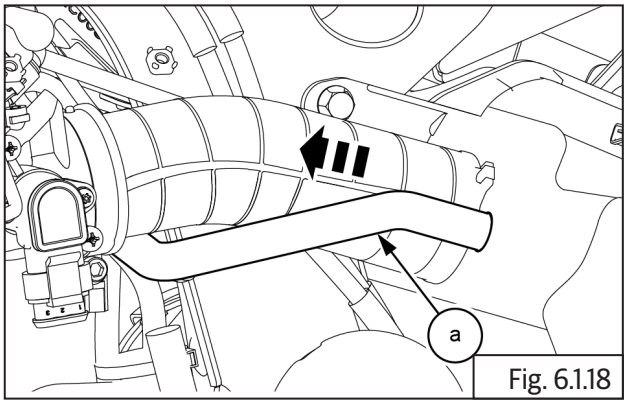

Fig. 6.1.18

- Loosen and remove 2 Nos. Hex socket head bolts **(M5) (a)** holding intake air temperature (IAT) sensor to air filter box assembly on the LH side.

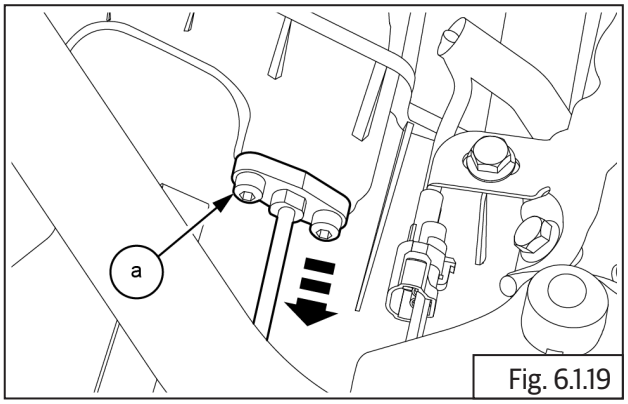

Fig. 6.1.19

	4 mm Allen Socket with Ratchet

- Gently pull out intake air temperature sensor **(a)** from air filter box assembly.

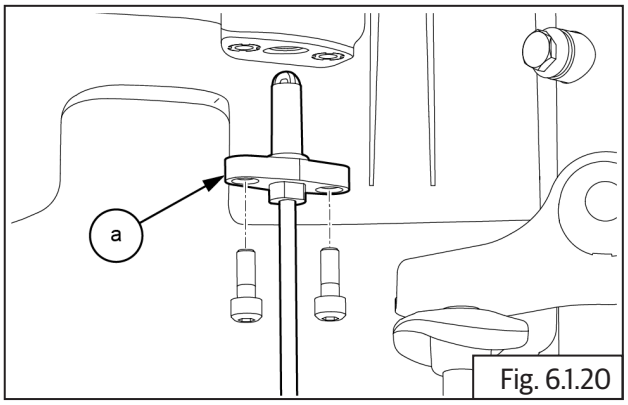

Fig. 6.1.20

Inspection

- Inspect air filter box assembly for any damages or cracks.
- Inspect air intake bellows for any damages, cracks and/or brittleness of the bellows.
- Inspect rubber seals, hoses for cuts, cracks or damages. Replace seals and rubber parts whenever they are removed.
- Inspect air filter element carefully for any deformation, damages, heavy clogging with dirt, soggy condition, and/or foreign particles embedded in the element. Replace if any of these conditions are observed.

Clean

- Clean air filter element **(a)** based on the periodic maintenance schedule OR more frequently if motorcycle is used in dusty/off-road conditions.
- Gently tap filter element with minimum force to dislodge heavy/embedded dust particles.
- Using low pressure compressed air, blow air from out side to inner side to remove fine dust particles.

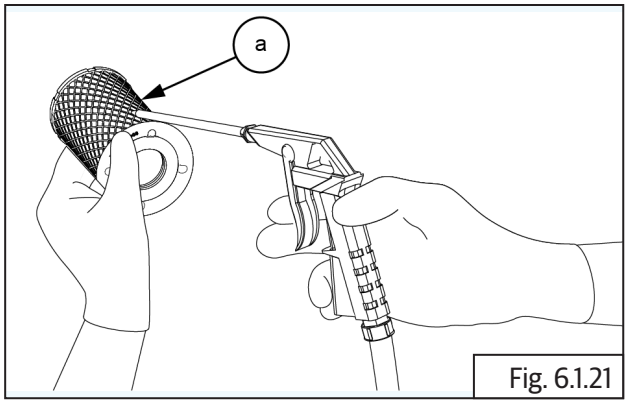

Fig. 6.1.21

	Air gun

⚠ CAUTION

DO NOT wash the element in water, gasoline or any solvents.

- Clean the air filter housing internals, with a soft damp cloth to remove dust.

Replace

- Replace all O-rings, rubber beadings, seals, gaskets, rubber parts etc., Whenever air filter assembly is serviced.
- Replace air filter element every 10000 Kms or earlier if motorcycle is used in dusty/off road conditions.

Assembly

6.1.3. Air Filter Box Assembly

- Locate the intake air temperature sensor **(a)** into air filter box assembly.

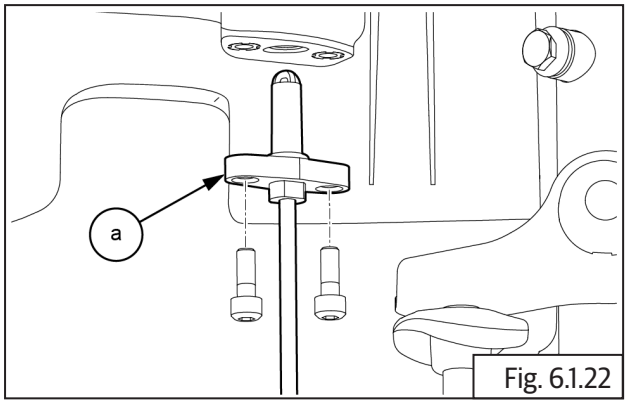

Fig. 6.1.22

- Locate and tighten 2 Nos. allen head bolts **(M5) (a)** on intake air temperature (IAT) sensor.

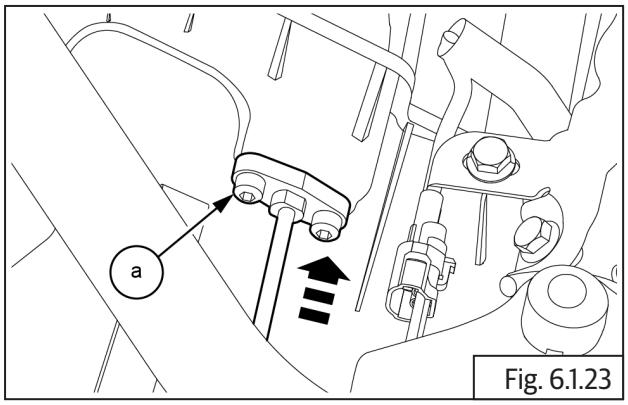

Fig. 6.1.23

	4 mm Allen Socket with Ratchet
Torque	2 N-m / 0.2 kgf-m

- Ensure worm clips on inlet bellows are sufficiently loose and correctly located in groove of bellows.
- Locate air filter box assembly **(a)** in frame from the LH side, duly ensuring bellows are aligned correctly to throttle body.

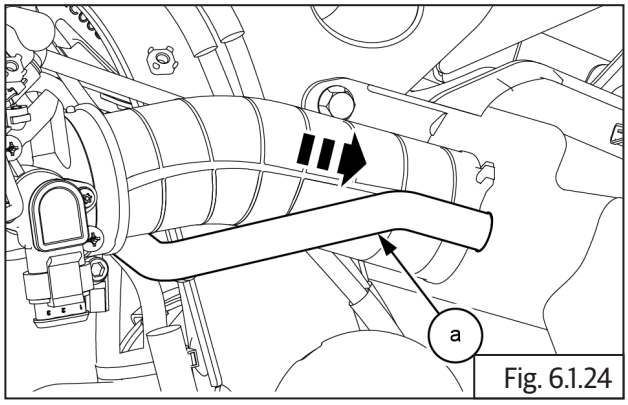

Fig. 6.1.24

- Locate bellows LH and RH on throttle body and ensure they are seated fully on throttle body.
- Align top mounting holes of air filter box assembly with mounting holes in frame.
- Tighten 2 Nos. Hex socket screws **(M5) (a)** on the worm clips **(b)**

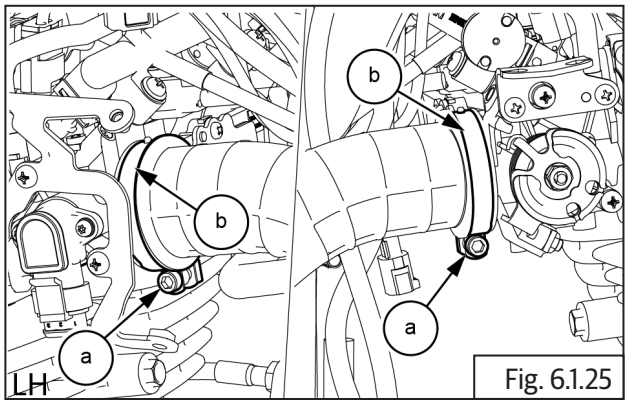

Fig. 6.1.25

	4 mm Allen Socket with Ratchet
Torque	3 N-m / 0.3 kgf-m

- Locate and tighten 2 Nos Hex bolts **(a) (M6)** on air filter housing LH mounting bolts.

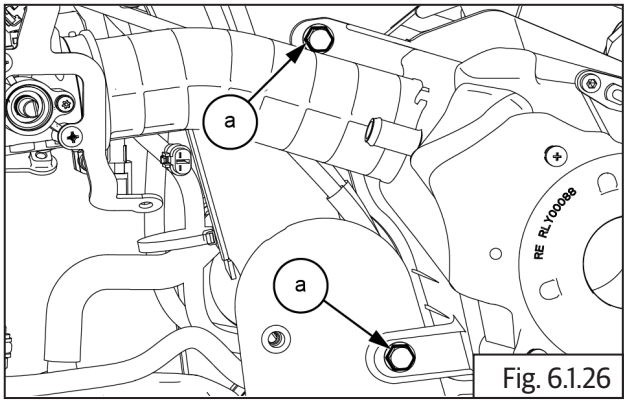

Fig. 6.1.26

	10 mm Socket with Ratchet
Torque	3.5 N-m / 0.35 kgf-m

- Locate and tighten 1 Nos Hex bolts **(a) (M6)** air filter housing top mounting bolts.

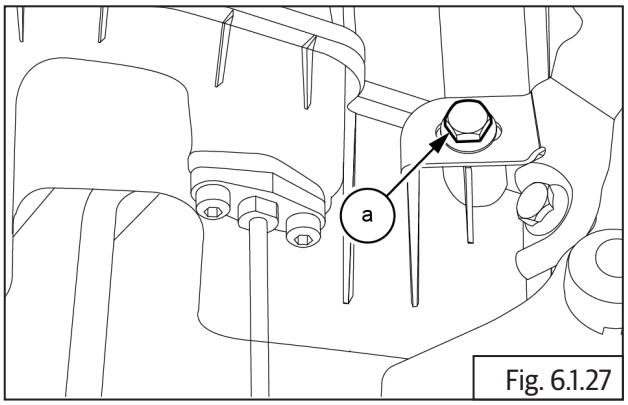

Fig. 6.1.27

	10 mm Socket with Ratchet
Torque	3.5 N-m / 0.35 kgf-m

- Connect intake air temperature sensor wiring coupler **(a)**.

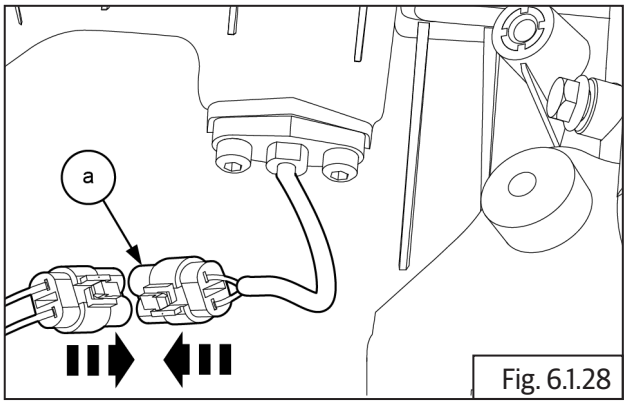

Fig. 6.1.28

- Locate and tighten 1 Nos button head bolt **(M5) (a)** on Breather chamber.

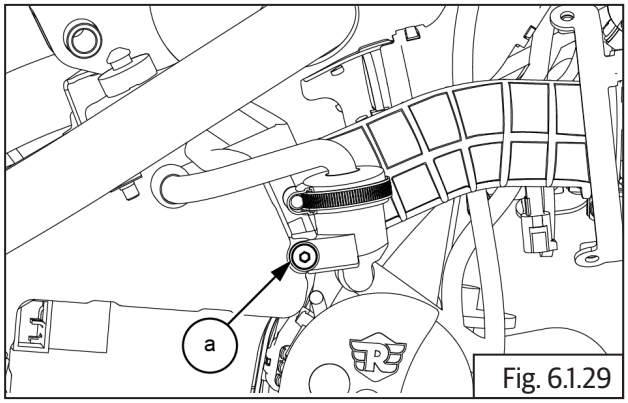

Fig. 6.1.29

	4 mm Allen Socket with Ratchet
Torque	2 N-m / 0.2 kgf-m

- Insert breather hose into LH air filter housing.

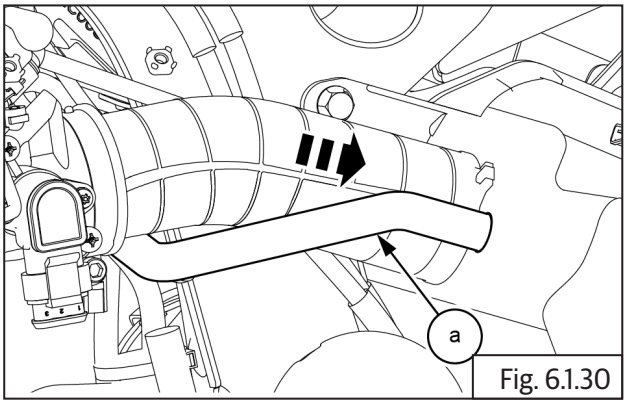

Fig. 6.1.30

- Insert breather chamber hose **(a)** into RH air filter housing.

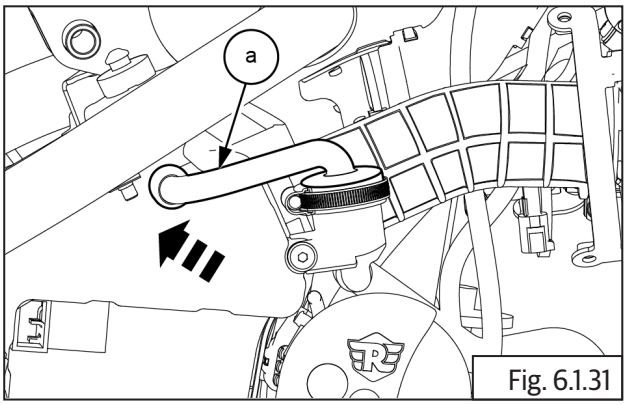

Fig. 6.1.31

- Fix diagnostic coupler **(a)** on RH air filter housing.

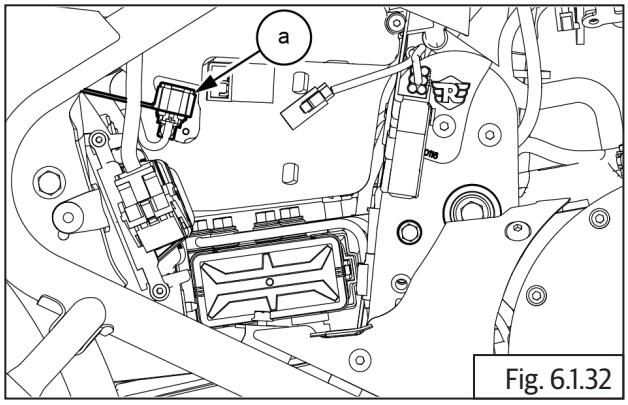

Fig. 6.1.32

- Locate the RH side infill panel **(a)** on frame.

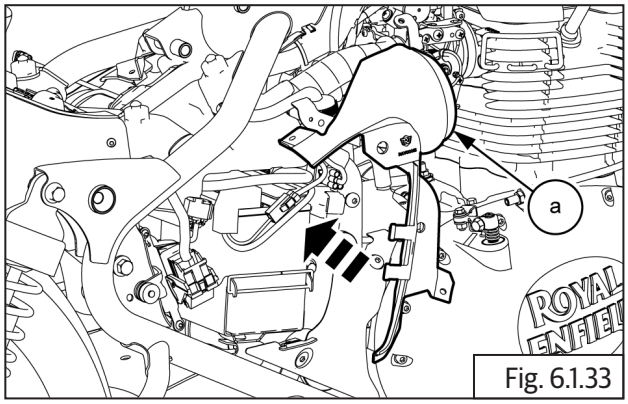

Fig. 6.1.33

- Locate and tighten 2Nos button head bolts **(M6) (a)** on RH side infil panel.

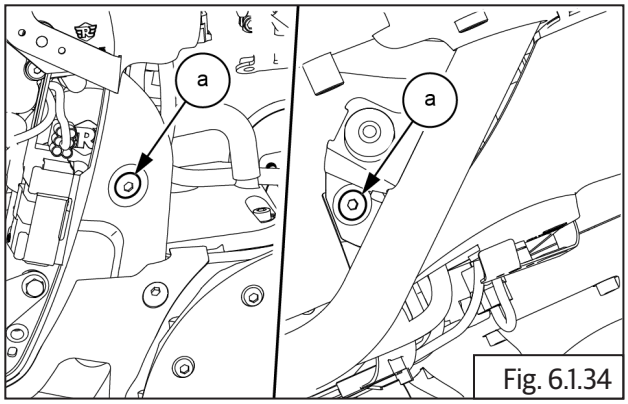

Fig. 6.1.34

	5 mm Allen Socket with Ratchet
Torque	3 N-m to 5 N-m / 0.3 to 0.5 kgf-m

- Locate the LH side infill panel **(a)** into frame.

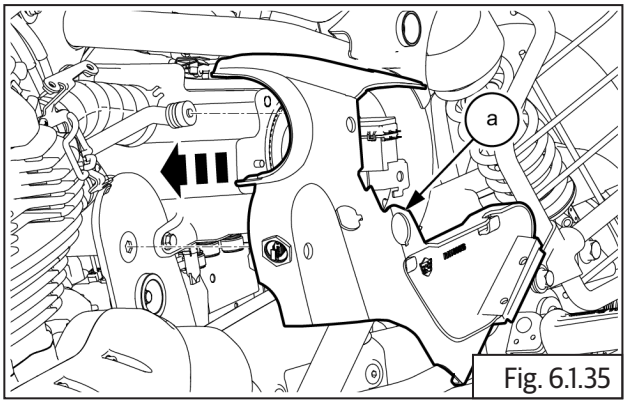

Fig. 6.1.35

- Connect USB port **(a)** wiring coupler.

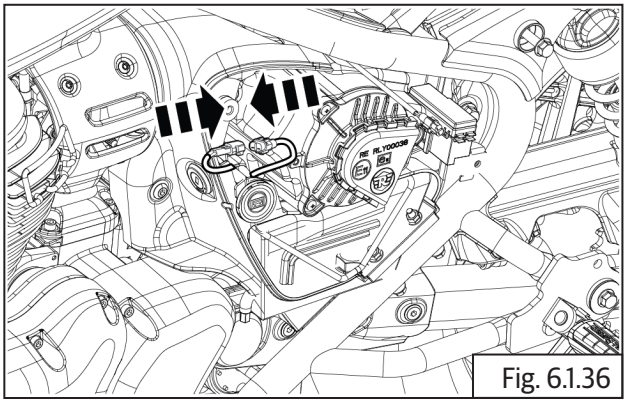
Fig. 6.1.36

- Locate and tighten 2Nos hex bolts with nut **(a) (M6)** on LH side panel.

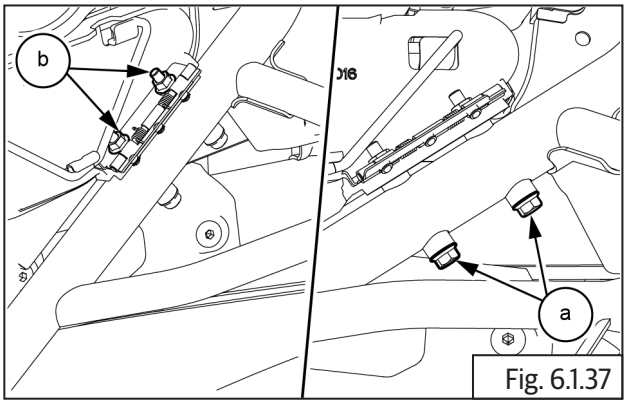

Fig. 6.1.37

	10 mm Socket with Ratchet
Torque	3 N-m to 5 N-m / 0.3 to 0.5 kgf-m

- Locate and tighten 2Nos button head bolts **(M6) (a)** on LH side infill panel.

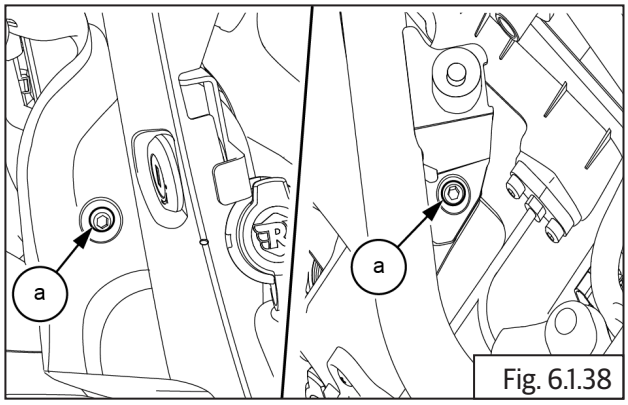

Fig. 6.1.38

	5 mm Allen Socket with Ratchet
Torque	3 N-m to 5 N-m / 0.3 to 0.5 kgf-m

- Locate the LH and RH cover into throttle body **(b)**
- Locate and tighten 6 Nos. allen head screws **(a)** on LH and RH throttle body.

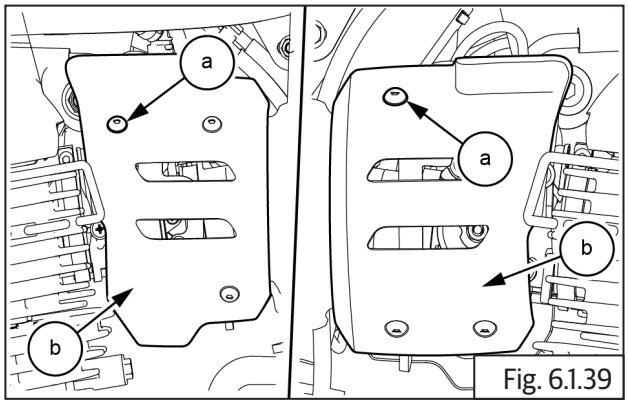

Fig. 6.1.39

	4 mm Allen Socket with Ratchet
Torque	7 N-m / 0.7 kgf-m

- Assembly the Pillion seat.
- Assembly the Rider seat.
- Assembly the Side panel RH.
- Assembly the Side panel LH.

6.1.4 Air Filter Element

- The filter element **(a)** has one end open and the other end closed. Insert closed end of filter element into air filter box assembly correctly such that open end is facing outside.
- Locate element cover **(b)** on air filter box assembly duly ensuring the locating hole in cover is aligned to peg in air filter box assembly.

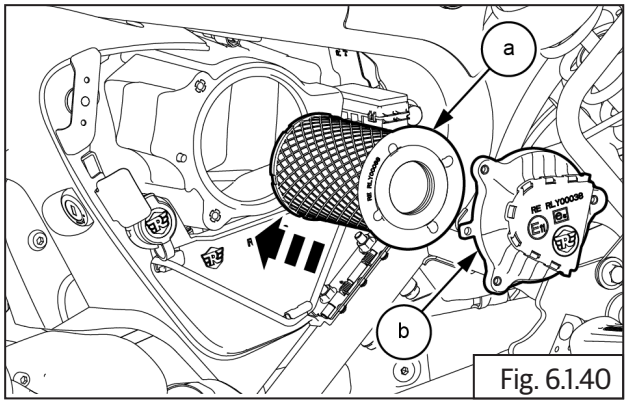

Fig. 6.1.40

- Ensure proper seating of cover and tighten cover to air filter box assembly evenly and firmly with 3 Nos. Pan head screws **(a)**.

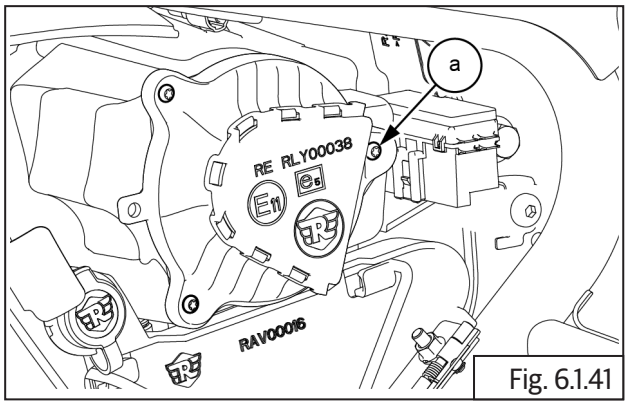

Fig. 6.1.41

	Phillips screw driver

⚠ CAUTION

Do not over tighten the screws or use excessive force as it will damage the cover and the air filter box assembly.

- Assemble the Side panel LH.

Troubleshooting

Symptom	Possible Cause	Diagnosis	How to Fix	Recommended Specification
Air induction noise from air filter box is high	Air filter element cover not sealing properly on air filter box assembly	Air filter element cover not seated properly on air filter box assembly/improperly tightened	Check proper seating of the air filter element cover on air filter box assembly	
	Air filter element cover cracked	Air filter element cover cracked due to improper assembly/over tightened	Replace air filter Element cover assembly	
	Air filter box assembly cracked/damaged	Air filter box assembly not aligned properly and tightened/damaged due to stone hit	Replace air filter box assembly	
	Hoses connecting to inlet manifold cracked	Cracked due to age hardening/improper assembly	Replace air filter box assembly	
Engine running very sluggish and pick up poor	Filter element choked	Filter element choked with dirt/water/oil	Check and replace filter element	
Engine misfiring/ running lean/idling improper	Rubber hoses connecting from air filter box assembly to ACV, IAC, throttle body, cracked/disconnected/ not sealing properly	Check and inspect each hose for no damage/cracks/ proper fitting	Check and replace hose/s, and/or air filter body as required	
	Filter element damaged	Damaged due to mishandling/heavy particles entering air filter box assembly	Check and replace filter element	
	IAT sensor not sealing properly	IAT sensor sealing gasket damaged/mounting screws loose	Check and replace IAT sensor gasket/sensor	
	ACV not sealing properly	ACV sealing gasket damaged/mounting screws loose	Check and replace ACV gasket/sensor	
Engine oil accumulation inside air filter box assembly	Excessive oil in sump	Check and maintain correct engine oil level	Clean breather chamber and hose leading to air filter box assembly	

NOTE

- *The trouble shooting given in this section is only related to issues with air filter. For complaints like sluggish running/misfiring improper idling etc., it will also be necessary to check the other aspects such as fuel, ignition, EMS, battery conditions etc., and correct.*

CONTROL CABLES

CONTENTS PAGE

6.2 Control Cables 359

Dismantling 359

6.2.1. Clutch Cable 359

6.2.2. Throttle Cable 361

Inspection 362

Assembly 363

6.2.3. Throttle Cable 363

6.2.4. Throttle Cables Free Play Adjustment 366

6.2.5. Clutch Cable 367

6.2.6. Clutch Cables Free Play Adjustment 368

Troubleshooting 372

6.2 Control Cables

Clutch Cable

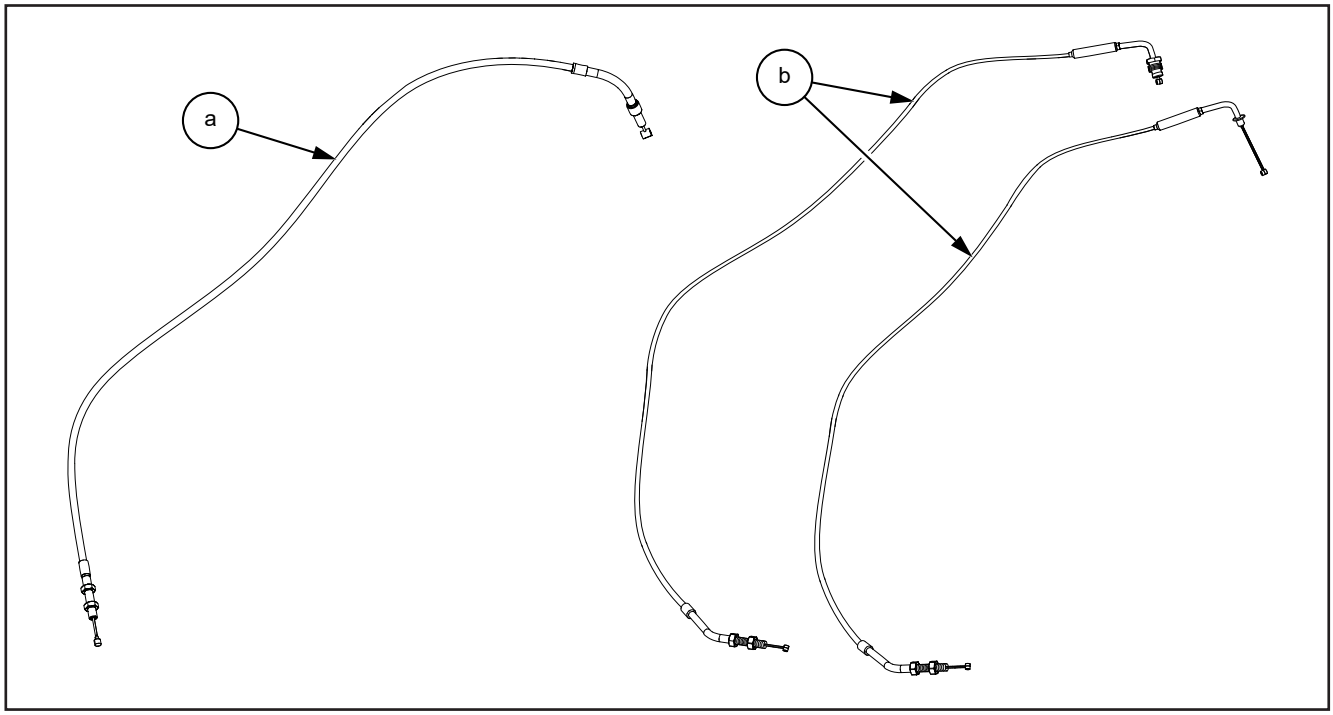

Item No.	Description	Quantity
a	Clutch Cable	1
b	Throttle cable assembly forward and return	1

Dismantling

6.2.1. Clutch Cable

Cover RH End

⚠ CAUTION

Ensure the motorcycle is upright on a firm and flat surface.

- Ensure ignition switch and engine stop switch are in OFF position.
- Gently compress and release 2 clips **(a)** holding clutch cable to frame near exhaust pipe RH.

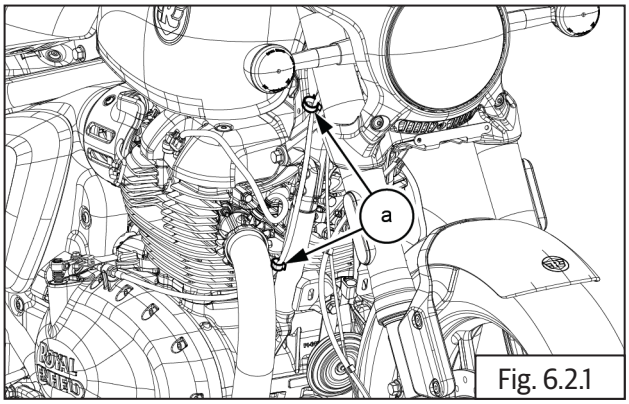

Fig. 6.2.1

- Loosen lock nut and ensure adjuster **(a)** at the handlebar end is fully turned into the bracket LH to increase cable play.

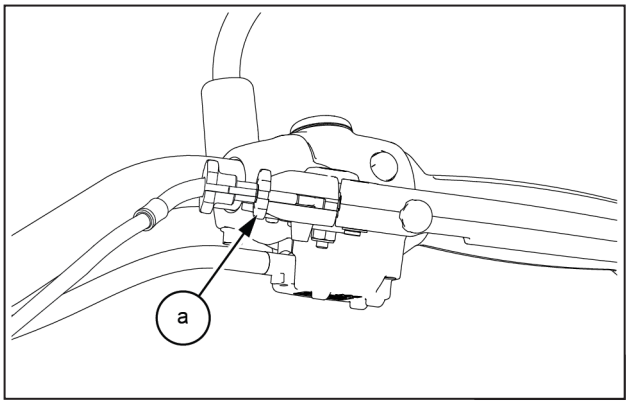

- Loosen outer locknut **(M8) (a)** completely on the clutch cable adjuster at RH cover end and push clutch cable **(b)** into cable guide in cover RH to increase the free play of the inner cable.

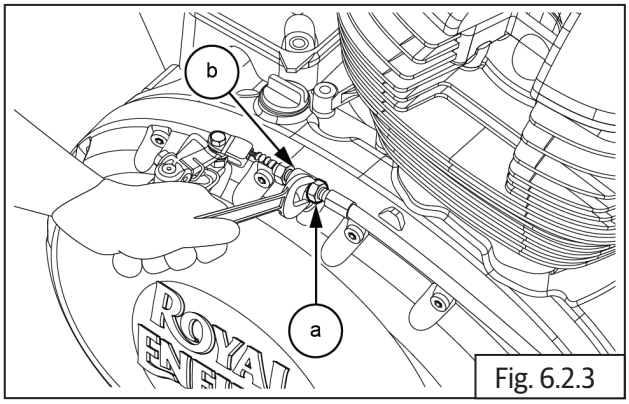

Fig. 6.2.3

	12 mm Double end spanner

- Gently push inner cable **(a)** into clevis **(b)** in clutch shaft and remove cable through the slot in the clevis.

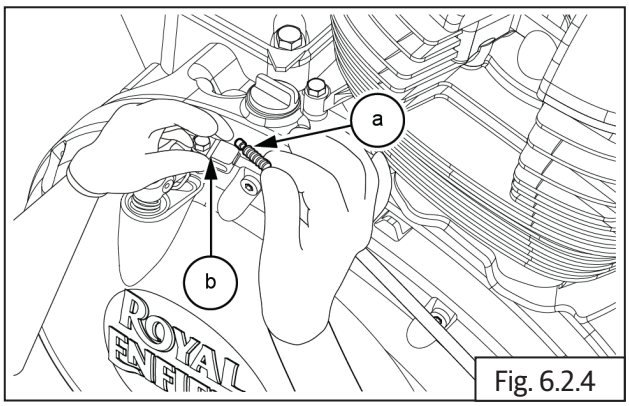

Fig. 6.2.4

- Remove protective rubber boot **(a)** from clutch cable **(b)**.

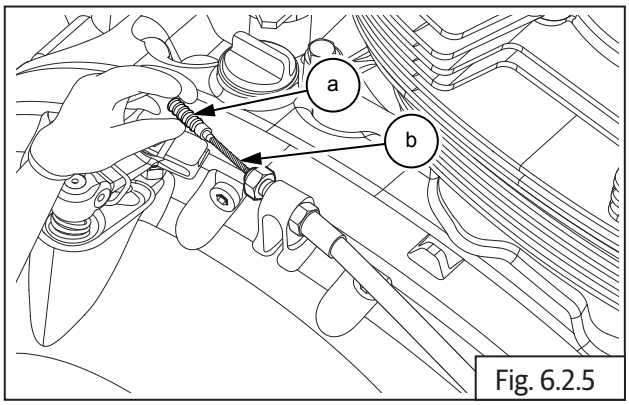

Fig. 6.2.5

- Loosen adjuster nut **(a)** completely from the clutch cable and remove.

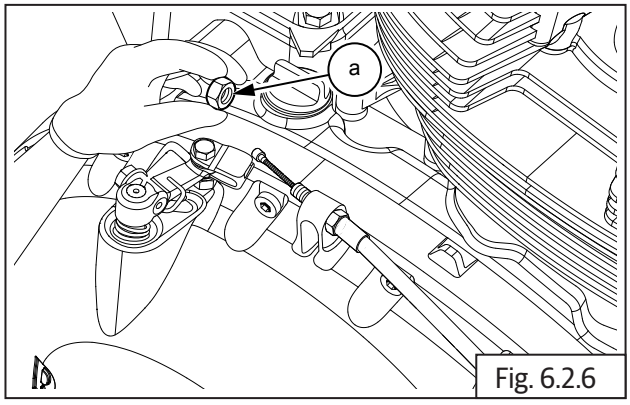

Fig. 6.2.6

- Gently pull out clutch cable assembly **(a)** from the cable guide **(b)** in cover RH assembly.

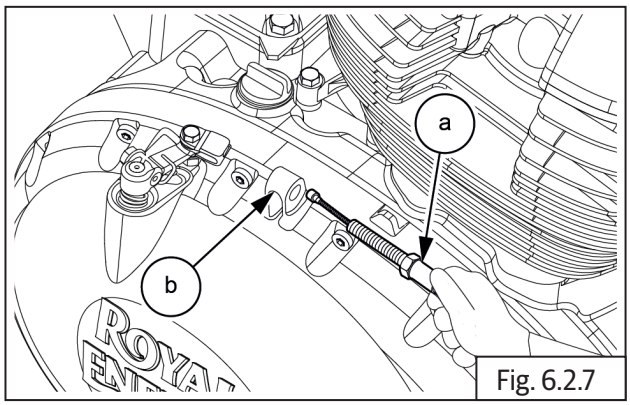

Fig. 6.2.7

Handlebar End

- Ensure the slot in the adjuster **(a)** and locknut are aligned with the slot in the clutch bracket **(b)**.

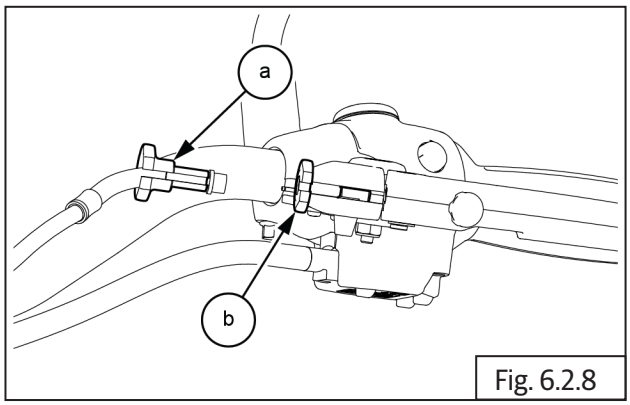

Fig. 6.2.8

- Gently pull out the outer cable **(a)** from the adjuster. Rotate and align adjuster with slot in clutch bracket and release inner cable from lever eyelet.

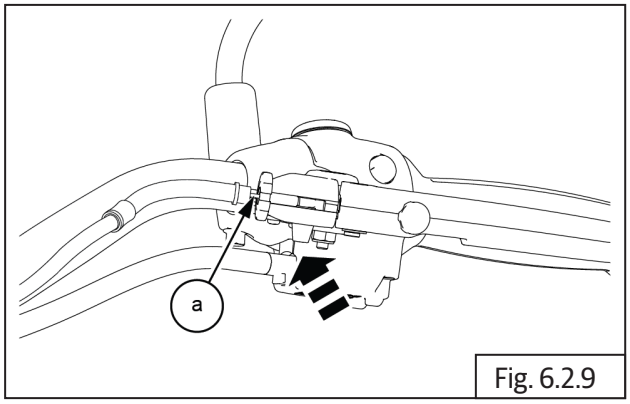

Fig. 6.2.9

- Remove clutch cable **(a)** from motorcycle.

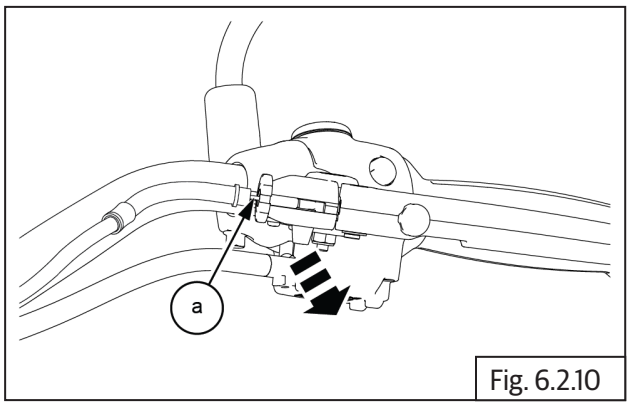

Fig. 6.2.10

NOTE
• *Please ensure the securing clips holding clutch cable to frame are released before attempting to remove clutch cable from motorcycle.*

6.2.2. Throttle Cable

Throttle Body End

⚠ CAUTION

Ensure the motorcycle is upright on a firm and flat surface.

- Ensure Ignition switch and Engine stop switch are in OFF position.
- Remove side panel RH.
- Remove rider seat.
- Loosen fuel tank assembly mountings and carefully slide and lift fuel tank up to access 2 clips holding the throttle cables to frame on RH side.
- Gently compress and release the clip **(a)** holding throttle cable to frame on the RH side.

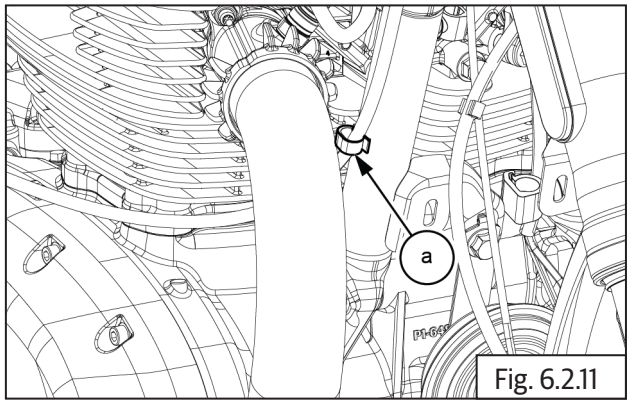

Fig. 6.2.11

- Loosen and remove 6 Nos. allen head screws **(M5) (a)** from LH and RH side throttle body cover.
- Remove the both covers **(b)** from throttle body.

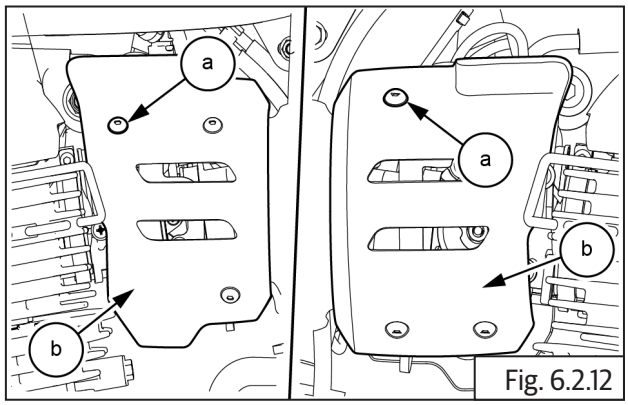

Fig. 6.2.12

	4 mm Allen Socket with Ratchet

- Loosen 2 Nos. Hex nuts **(M6) (a)** fully on top of throttle cable bracket **(b)** to increase inner cable **(c)** free play.

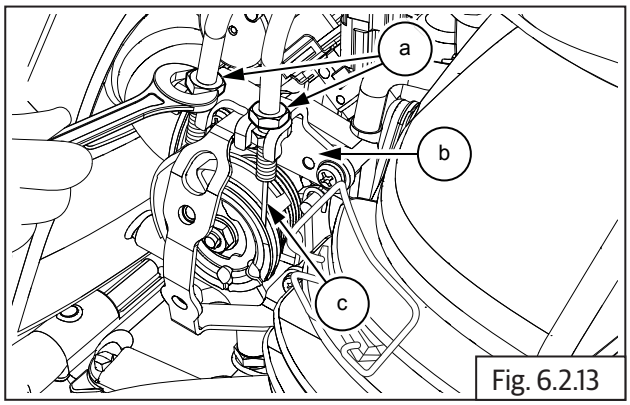

Fig. 6.2.13

	10 mm Double end spanner

- Push cable adjusters fully into the bracket and loosen the 2 inner hex nuts **(M6)** on the throttle cable adjusters.
- Ensure both inner nuts are free from the adjusters and gently pull out the adjuster of the inside cable till it is out of the bracket and slide the inner cable out through the slot in the bracket.
- Repeat above process for the other throttle cable.
- Rotate inner cable **(a)** till it is aligned with the slot in the rotor **(b)** on throttle body and remove cable from the eyelet.
- Repeat above process for removing the other throttle cable.
- Remove the cables from the bracket on throttle body.

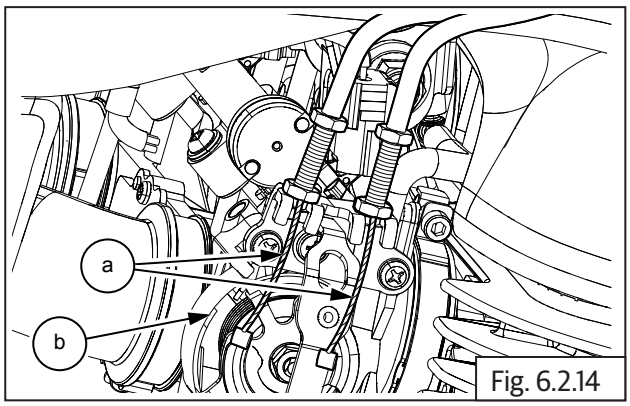

Fig. 6.2.14

Handlebar End

- Loosen screw **(a)** on the throttle cable stopper plate **(b).**

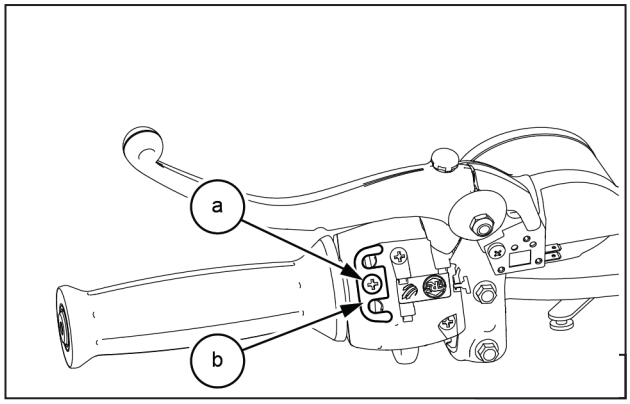

	Phillips screw driver

- Loosen and remove 2 Nos. Phillips head screws **(a)** from the bottom of the throttle rotor housing and separate the halves.

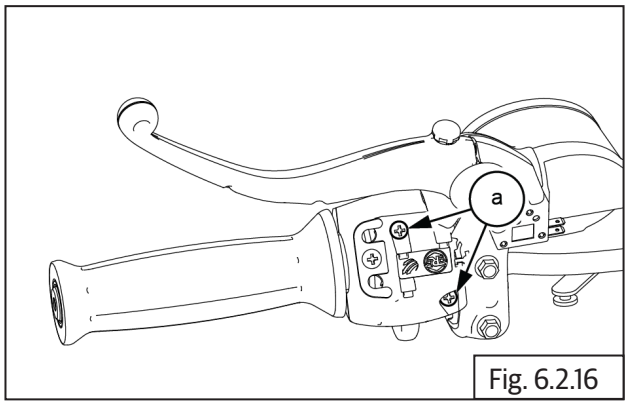

Fig. 6.2.16

	Phillips screw driver

- Gently pull up the inner cable **(a)** from the slot in the throttle rotor **(b)**, rotate and ensure it is aligned to the slot in the throttle rotor grip and remove.

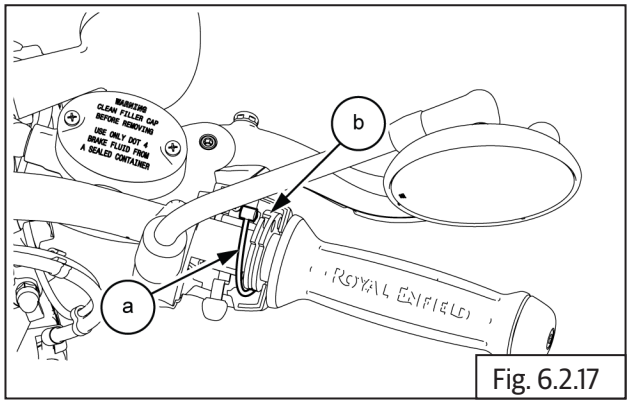

Fig. 6.2.17

- Repeat the above process to remove the other inner cable **(a)**.

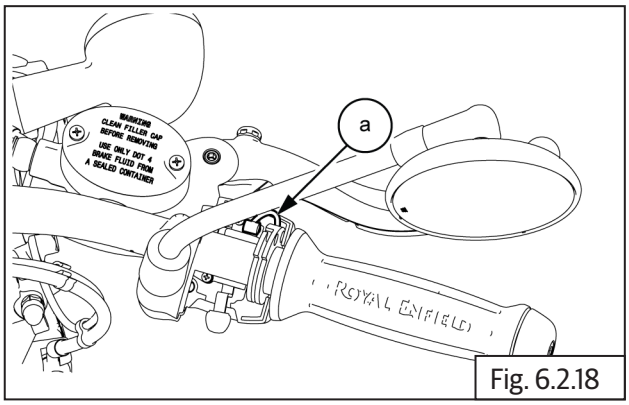

Fig. 6.2.18

- Gently remove the cables from the rotor housing bottom.
- Remove the twin cables from the motorcycle.
- Remove throttle rotor.

Inspection

Cables

- Clean and inspect inner cables top and bottom ends for frayed and/or broken strands.

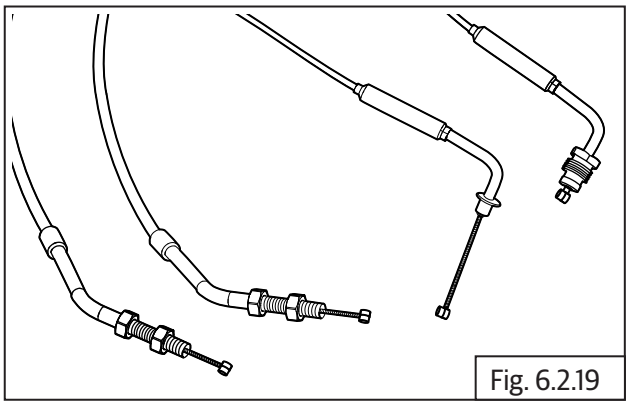

Fig. 6.2.19

- Clean and inspect outer cables for brittleness, damages and/or cracks.

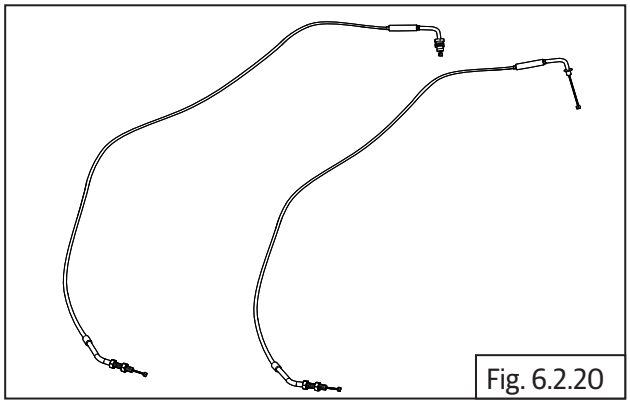

Fig. 6.2.20

- Inspect the cable adjuster threads and hex nuts for any wear out and/or damage.
- Check free movement of the inner cables in the outer cables and no stickiness.
- Replace control cables as per the recommendations in the maintenance chart.

⚠ CAUTION

DO NOT wash control cables, especially inner cables, using any solvents since it will damage the protective layer inside the control cables.

Do not lubricate inner cable by spraying any lubricants into the outer cable.

Do not roll the cables into a tight wind for storing after removal. Store them as straight as possible to avoid damage to the inner layer/ cable.

Use a soft cloth with a mild cleaning agent if necessary, to wipe off the dirt, grease or grime on the outer cables.

Clutch Lever Bracket Adjusting Screw And Clutch Lever

- Inspect the cable seating area in the adjuster on clutch lever bracket for any damages/cracks.
- Inspect the threads of the adjuster and the clutch lever bracket for any damages, threads wear out.

Throttle Rotor, Grip and Housing on Handlebar RH

- Inspect throttle rotor grip for any damages and/or cracks.
- Inspect throttle rotor for any damages/wear out.
- Inspect cable seating eyelets in the throttle rotor for any damages, fraying etc.
- Inspect the throttle rotor movement slots in the top and bottom housing for any damages/wear out.

Assembly

6.2.3. Throttle Cable

- Route both the cables **(a)** between the top yoke and frame head tube on the RH side under fuel tank.
- Pass the both throttle cable **(a)** between RH fork leg and the headstock.

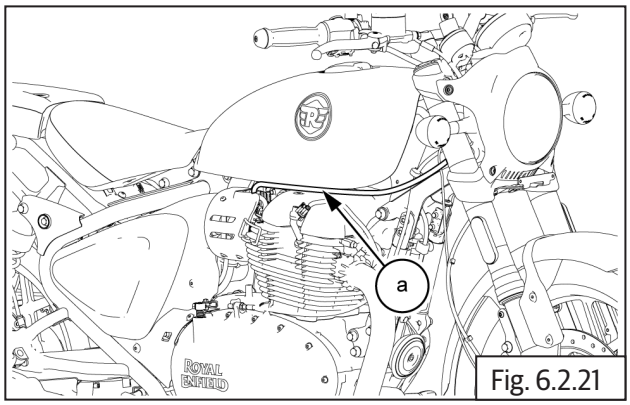

Fig. 6.2.21

- Locate cable holding clips **(a)** on throttle cables and lock into the frame.

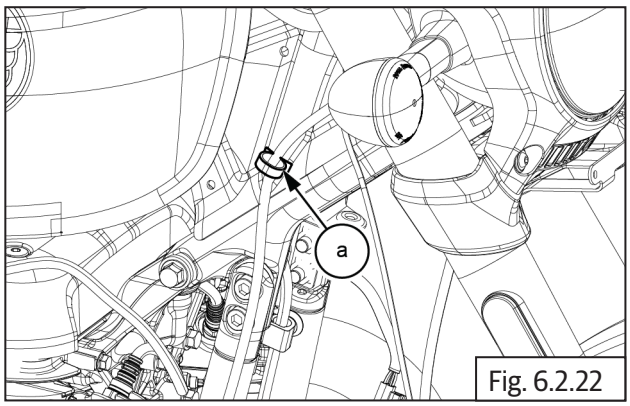

Fig. 6.2.22

Handlebar End

- Lubricate throttle rotor grip inside with general purpose grease and assemble on handlebar RH.
- Ensure the cable slots on the rotor are facing above for correct and ease of assembly of inner cables.
- Gently locate and insert the throttle rotor **(a)** into the handlebar RH .

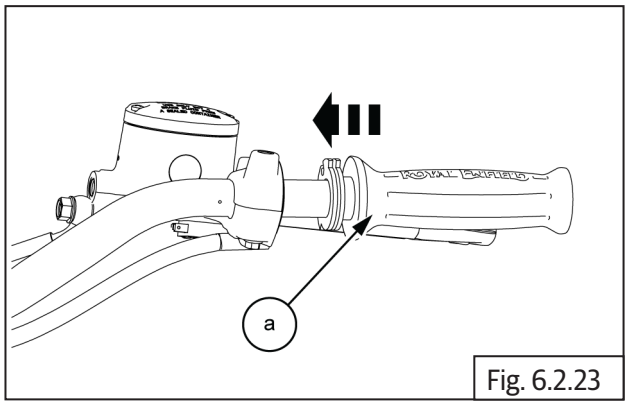

Fig. 6.2.23

- Ensure the adjusters on both cables are set at their center for finer adjustments later.
- Insert throttle cable **(a)** into the rear hole of the throttle rotor housing and locate inner cable in the rear eyelet on the throttle rotor **(b)**.
- Align inner cable to the slot in the rotor, rotate and ensure proper routing of the inner cable in the slot in throttle rotor.

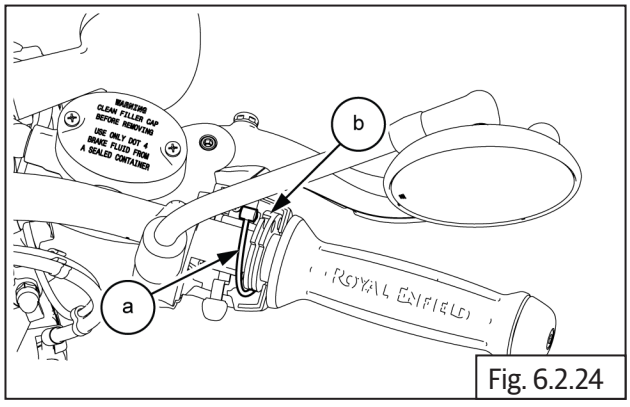

Fig. 6.2.24

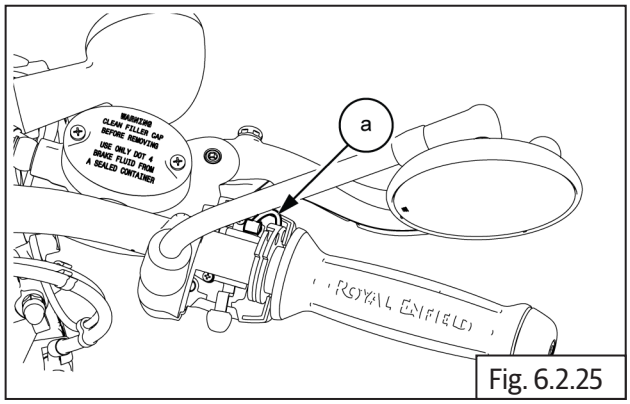

Fig. 6.2.25

- Locate and hold bottom housing **(b)** against handlebar such that the throttle rotor is correctly seated in the groove in the bottom housing.
- Rotate throttle rotor clockwise, till it is resting on the bottom housing.
- Locate the top housing **(a)** on the handlebar above the rotor, duly ensuring the following:
  - Throttle rotor is correctly seated in the groove in the top housing **(a)**.
  - The locking peg in the top housing **(a)** is located correctly into the hole in the handlebar.
  - The seating faces of the housing are matched correctly.
- Support top and bottom housings **(b)**, check for free movement of the throttle rotor by gently rotating the throttle rotor grip.

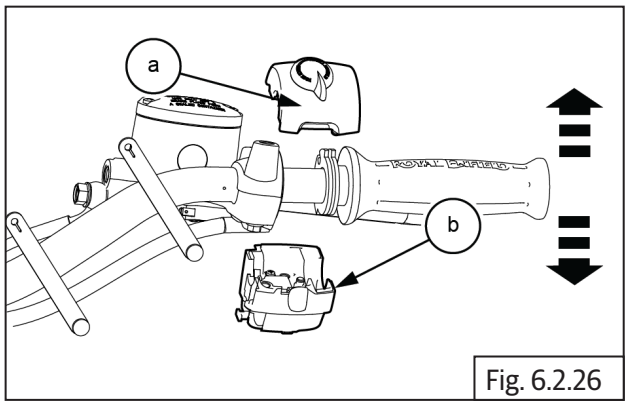

Fig. 6.2.26

- Insert long screw **(a)** into the front mounting hole of switch module RH from the bottom and tighten just sufficiently.

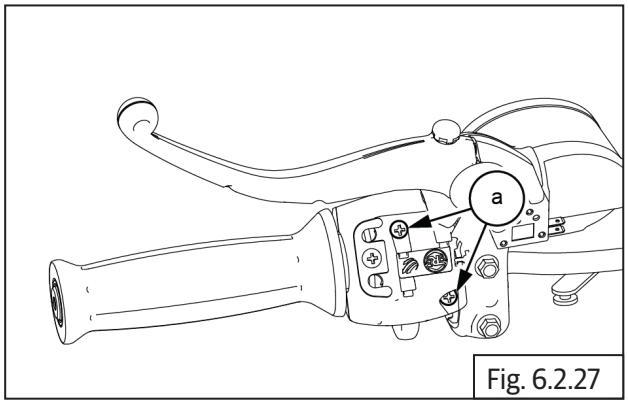

Fig. 6.2.27

⚠ CAUTION
DO NOT over tighten

	Phillips screw driver

- Insert and tighten 1 Nos. screws **(a)** on throttle cable stopper plate **(b)** .

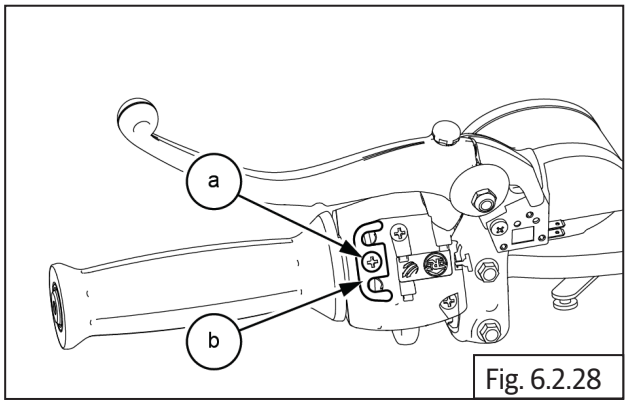

Fig. 6.2.28

	Phillips screw driver

- Insert and tighten Hex socket head bolt **(M6) (a)** along with balancer **(b)** into handlebar RH

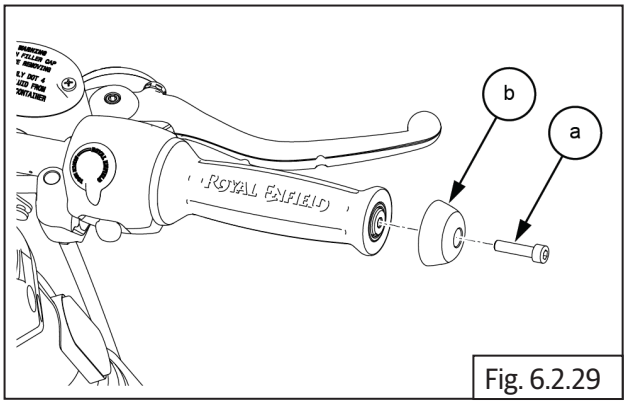

Fig. 6.2.29

	5 mm Socket with Ratchet

Throttle Body End

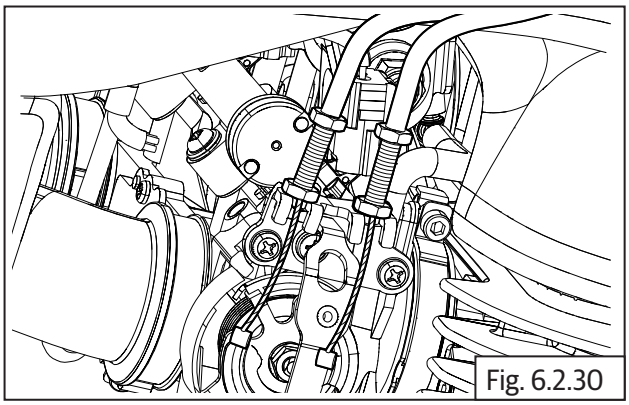
Fig. 6.2.30

- Gently open throttle at handlebar end and identify the cable in which the inner cable retracts.
- Insert this cable into the front slot in the bracket in the throttle body and ensure the adjuster is fully into the bracket on throttle body.
- Assemble lock nut on the inner cable.

- Position inner cable **(a)** to the front slot of the rotor on throttle body, insert inner cable into the eyelet and route the cable in the groove in the rotor of the throttle body.

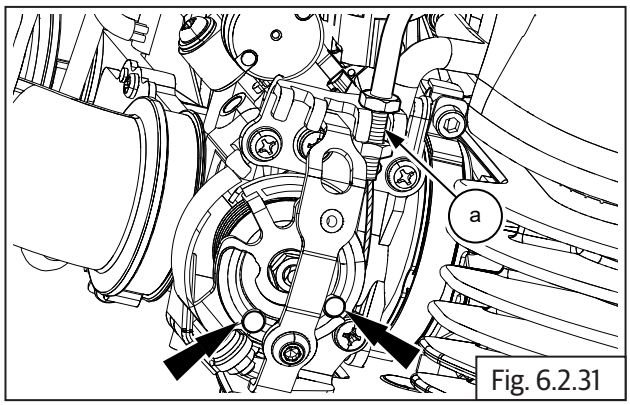

Fig. 6.2.31

- Repeat above steps to locate the other cable in the rear slot of the rotor on throttle body.

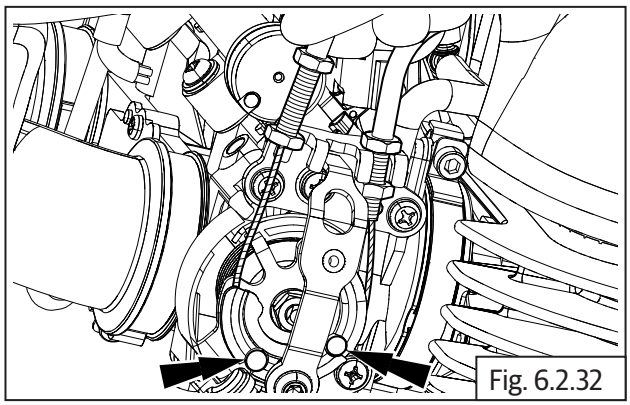
Fig. 6.2.32

- Ensure both inner cables are seated properly in the eyelets at throttle body end and handlebar end. Gently rotate throttle rotor at handlebar and ensure they are operating properly.

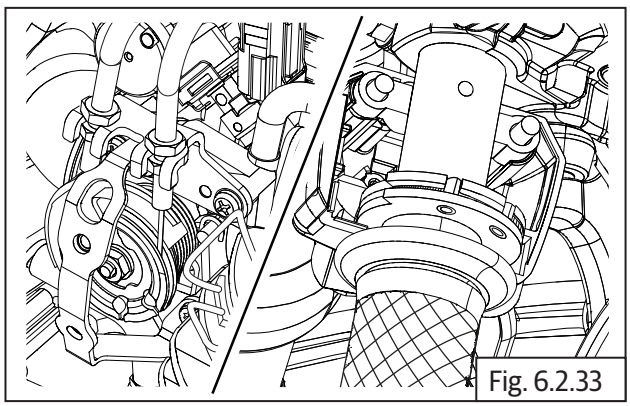
Fig. 6.2.33

6.2.4. Throttle Cables Free Play Adjustment

- Gently pull adjusters out of the bracket on throttle body end till the inner cables have **NO SLACK**.
- Tighten the outside nuts on the adjusters till they are resting against the bracket on throttle body.
- Hold handlebar straight and check for free rotation of **3 to 4 mm**. (The rotor on the throttle body should not rotate).

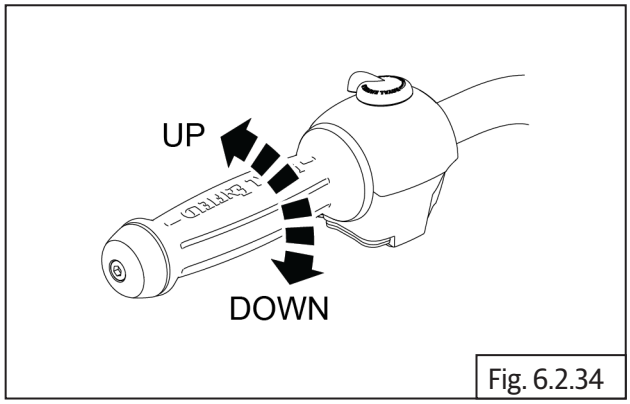

Fig. 6.2.34

- Loosen/Tighten the outer nuts to achieve the correct free play.
- Check both cables are correctly positioned and clamped to the frame, turn handlebar to both left and right sides to ensure the free play is maintained.
- Tighten inner lock nuts on the adjusters till they are firmly locked on the inside of the bracket.

NOTE
• *To carry out finer adjustments to maintain the free play, turn the adjusters on the cables at the handlebar end, in or out.*

- Locate the LH and RH cover into throttle body **(b)**
- Locate and tighten 6 Nos. allen head screws **(a)** on LH and RH throttle body .

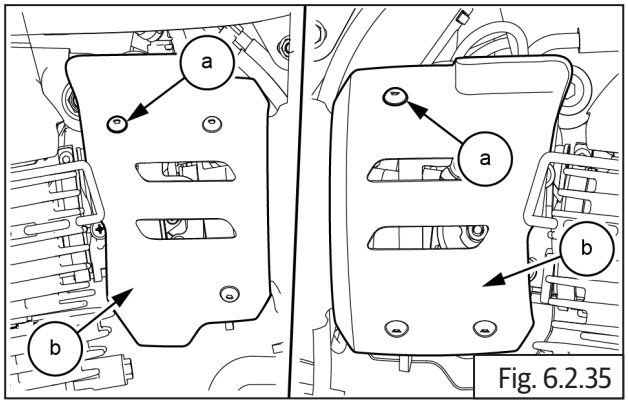

Fig. 6.2.35

	4 mm Allen Socket with Ratchet
Torque	7 N-m / 0.7 kgf-m

- Assemble fuel tank assembly.

6.2.5. Clutch Cable

Handlebar End

- Ensure adjuster on lever bracket LH is in midway position **(a)** and the slot in the adjuster is correctly aligned to the slot in the lever bracket LH.

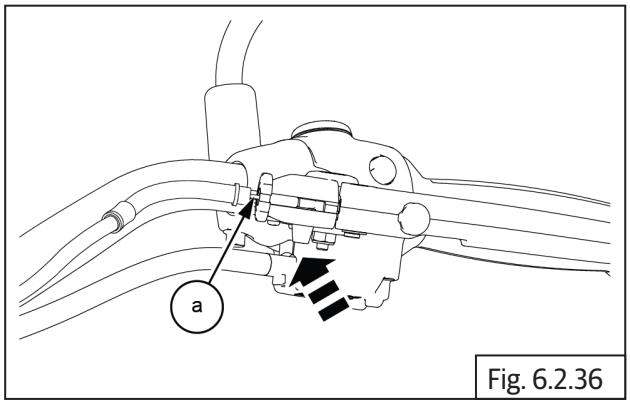

Fig. 6.2.36

- Locate inner cable **(a)** into the eyelet on clutch lever and ensure it is aligned.
- Route inner cable into the slot in the clutch bracket and adjuster and lock the outer cable into adjuster.

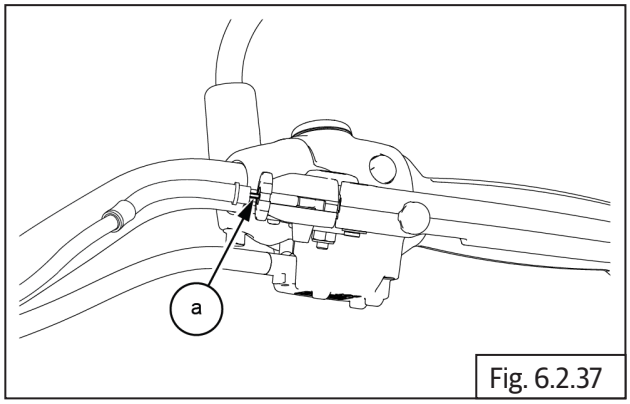

Fig. 6.2.37

- Route clutch cable between headlamp holder LH and frame towards the RH side.
- Locate 1 holding clips **(a)** on the clutch cable and frame near RH exhaust pipe.

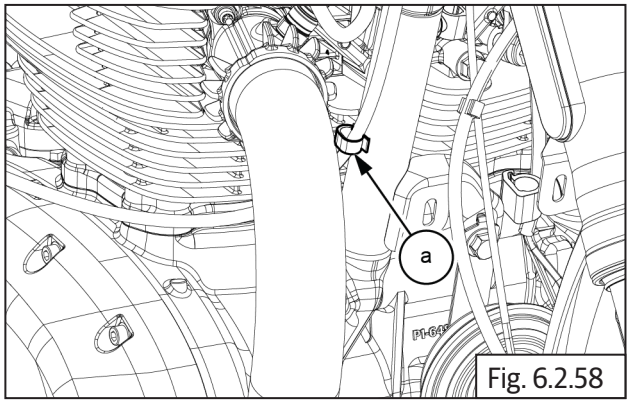

Fig. 6.2.58

Clutch cover End

- Insert inner cable into the cable guide **(b)** in clutch cover assembly and ensure the adjuster **(a)** is fully inside the guide in clutch cover assembly.

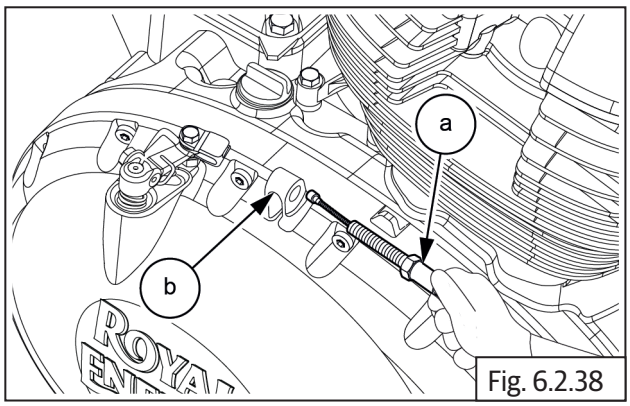

Fig. 6.2.38

- Assemble adjuster nut **(a)** on the adjuster and tighten by a few threads.

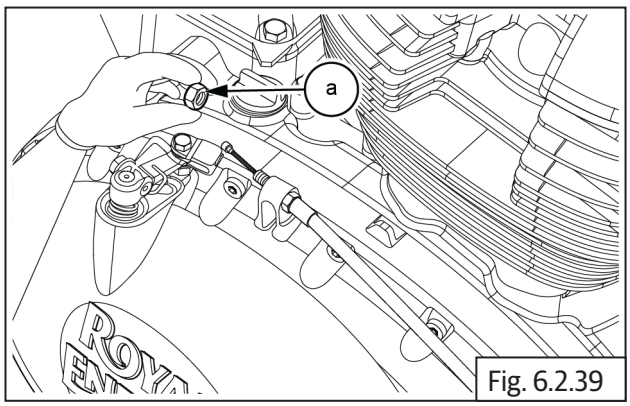

Fig. 6.2.39

- Assemble protective rubber boot **(a)** on clutch cable inner.

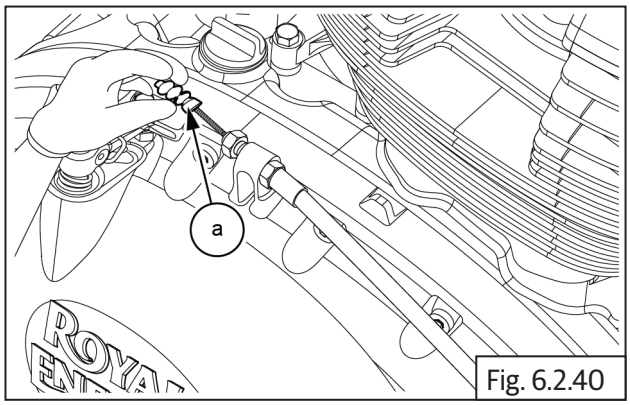

Fig. 6.2.40

- Gently locate inner cable **(a)** into clevis in clutch lever **(b)**.

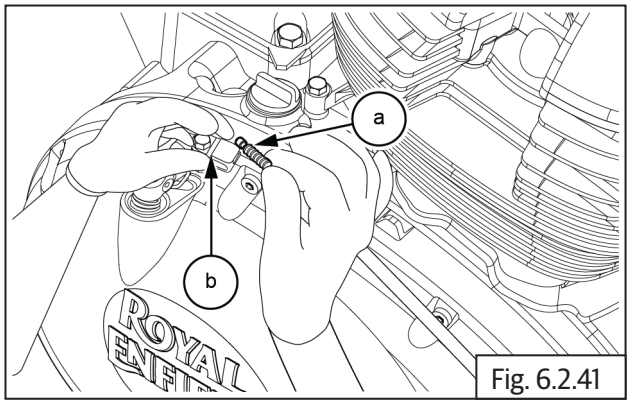

Fig. 6.2.41

6.2.6. Clutch Cable Free Play Adjustment

- Free play should be measured at ball end of clutch lever and should be **9-12 mm** when handlebars are at LH position **(Refer the image A).**

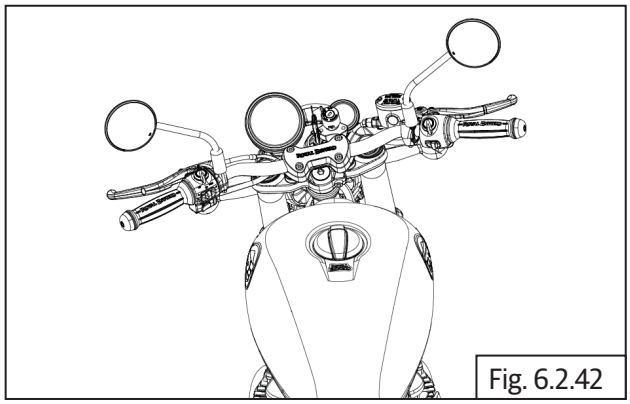
Fig. 6.2.42

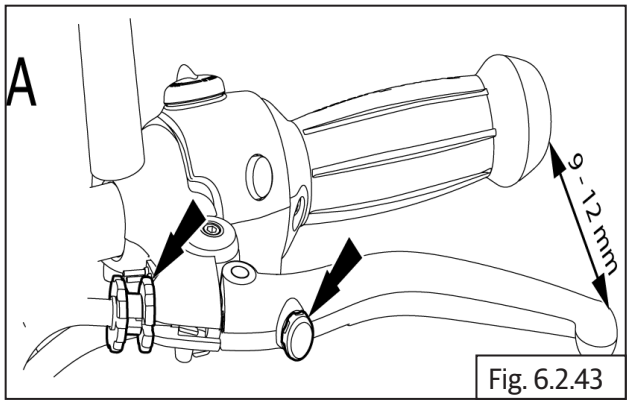

Fig. 6.2.43

- Straight should be checked at **10-20 mm** (**Refer the image B)**.

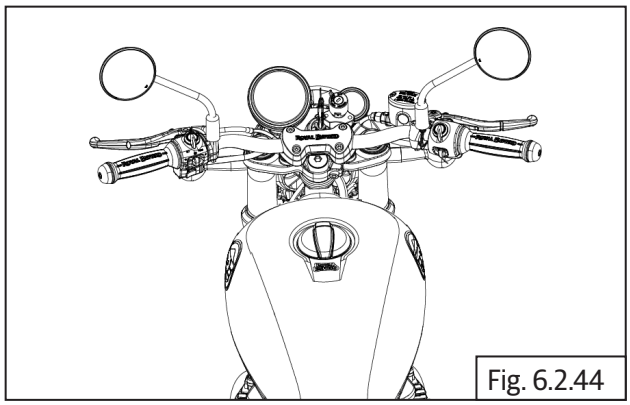
Fig. 6.2.44

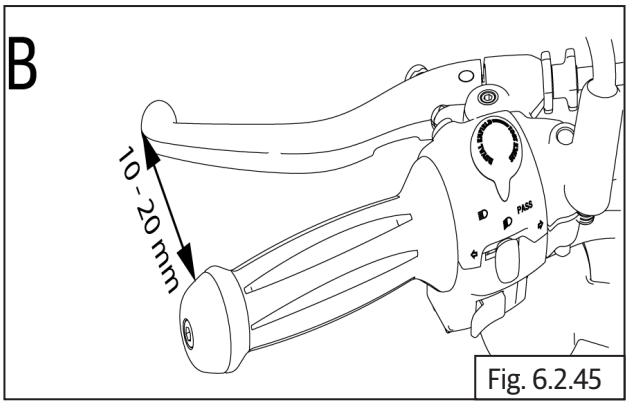

Fig. 6.2.45

NOTE
• *Clutch lever to be actuated 3 times before any measurement.*

- The clutch lever adjuster, should be set to 4mm thread exposure (thread protruding from the lever holder Refer below image).

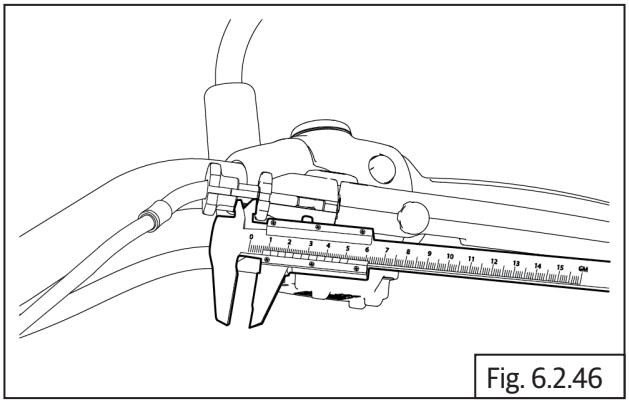
Fig. 6.2.46

- Put the steering to left lock position.

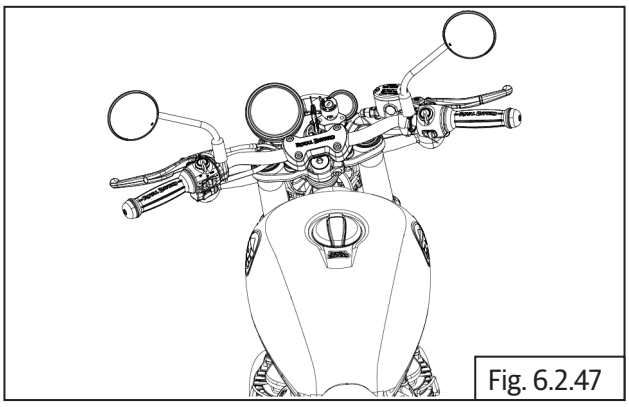
Fig. 6.2.47

- Adjust free play at engine to give **0.9mm** (minimum) free play at lifter arm **(a)**.

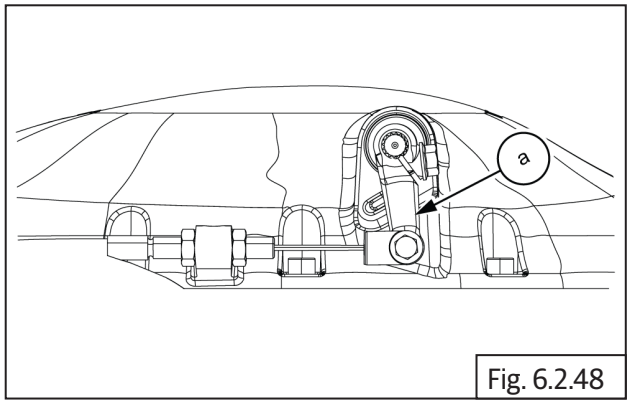

Fig. 6.2.48

- Tighten adjuster nuts **(a)** in clutch cable **(b)** at cover RH to recommended torque.

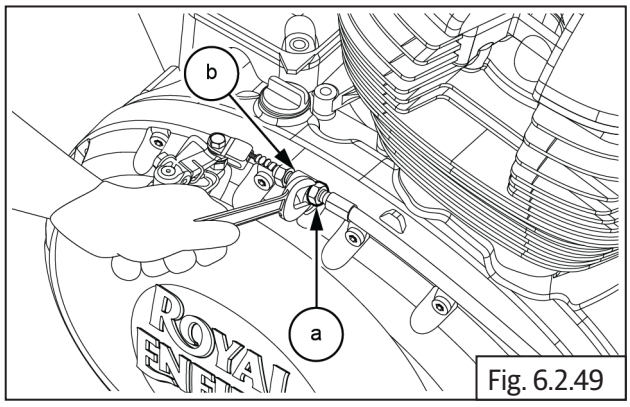

Fig. 6.2.49

	12 mm open end torque wrench
Torque	6 N-m / 0.6 kgf-m

- Actuate clutch lever three times and check for free play again for **9-12mm**.

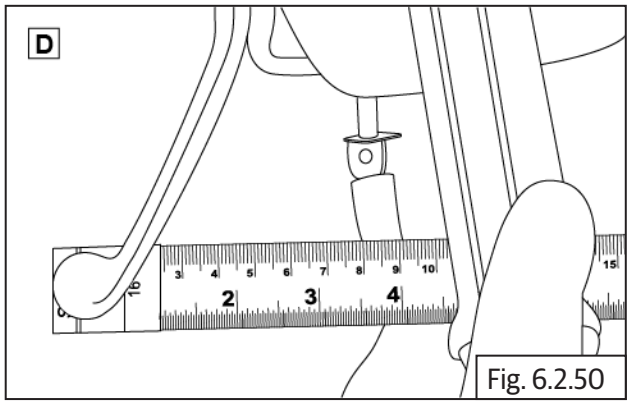

Fig. 6.2.50

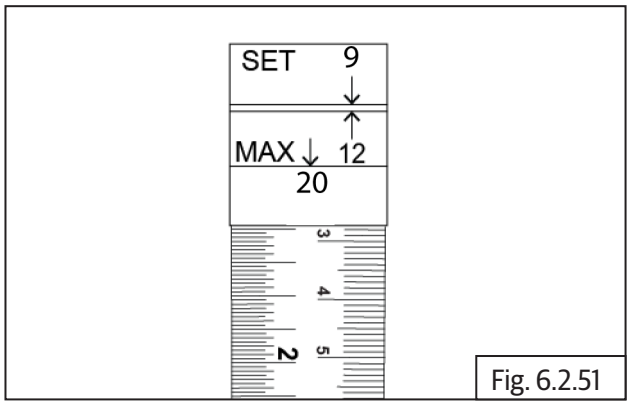

Fig. 6.2.51

- Keep handlebar and straight position.

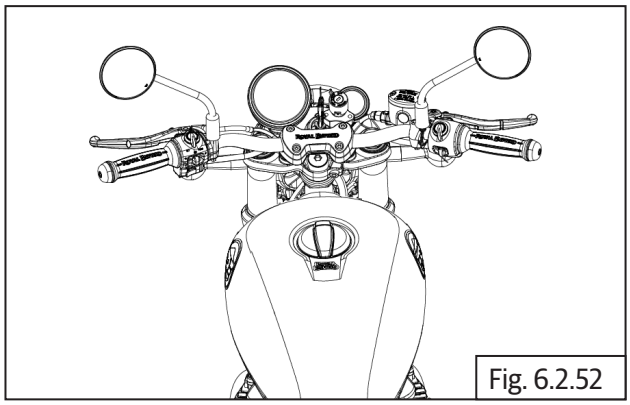
Fig. 6.2.52

- Actuate clutch lever 3 imes and check for free play **10-20 mm**.

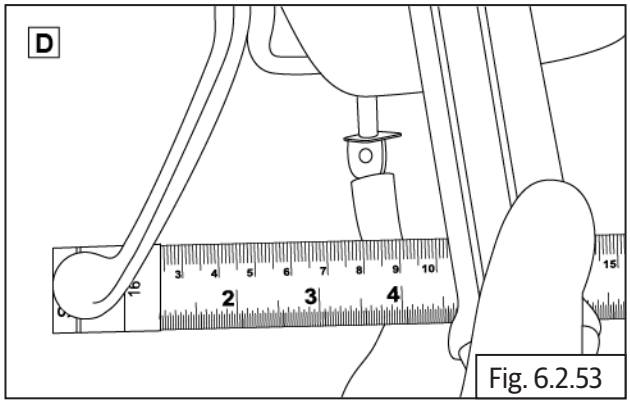

Fig. 6.2.53

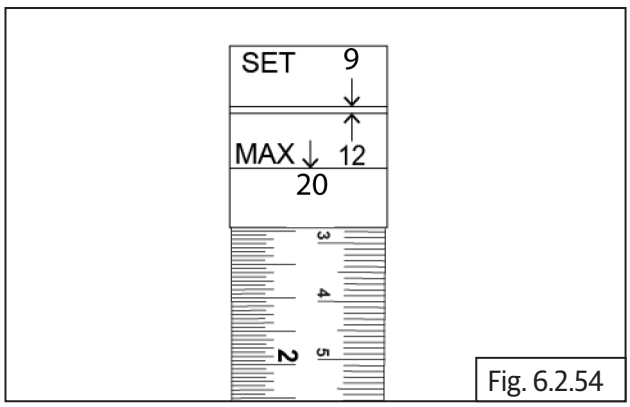

Fig. 6.2.54

NOTE
• If this play not achieved, the steering should be returned to LH lock, • Ensure the Clutch cable routing properly assessed. • Repeated the same procedure until the above value are met.

NOTE
• In all steered positions, **0.00 mm** free play is easily assessed at the clutch lifter arm **(a)** . • If there is 0mm free play, this will feel solid if pushed by hand. This should be checked at LH, Straight Ahead and RH lock.

- If clutch play is not sufficient even after adjusting at the lever end and the clutch case, adjust the serration in the clutch lifter arm towards the front to achieve recommended clutch play.

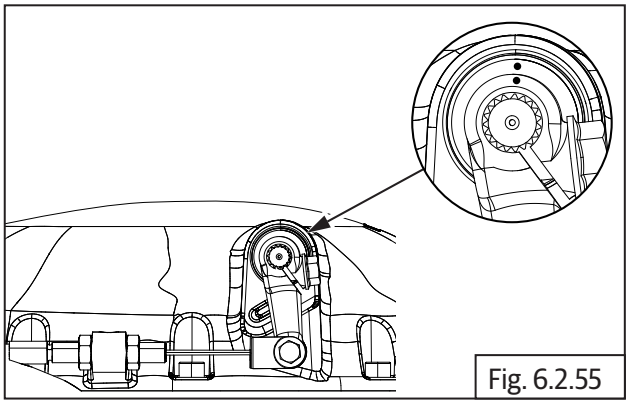
Fig. 6.2.55

- If the cable length is not sufficient, move adjust one more serration at the clutch lifter arm.

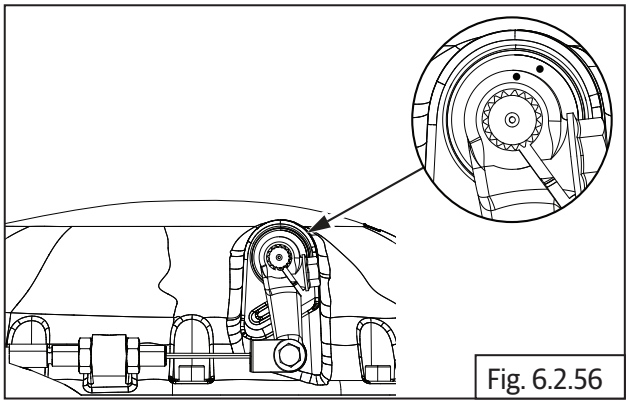
Fig. 6.2.56

- In all steered positions, **0 mm** free play is easily assessed at the clutch lifter arm .
- If there is 0mm free play, this will feel solid if pushed by hand. This should be checked at LH, Straight Ahead and RH lock.
- Hold handlebar straight and check clutch lever free play of 4 mm (The lever on clutch cover should not

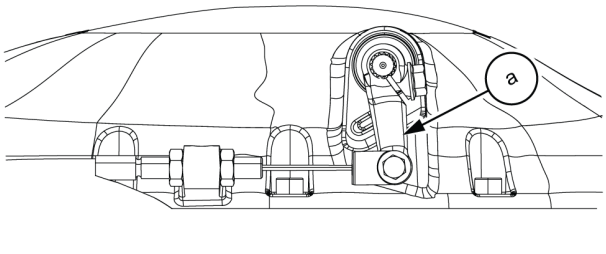

Fig. 6.2.57

Troubleshooting

Symptom	Possible Cause	Diagnosis	How to Fix	Recommended Specification
Clutch lever movement not smooth	Clutch lever operation at handlebar end is sticky	Clutch lever, bracket and pivot screw at handlebar end is dry without lubrication/excessive dirt accumulation	Clean and lubricate clutch lever, bracket and pivot screw at handlebar end	
	Clutch lever excessive movement in handlebar bracket LH	Clutch lever mounting hole is out of shape/fixing bolt worn-out	Check and replace clutch lever bracket assembly	
	Inner cable movement sticky in outer cable	Inner cable strands broken and jammed inside outer cable/clutch lever bracket	Check and replace clutch cable	
		Teflon tube inside outer cable torn/damaged	Check and replace clutch cable	
	Clutch shaft movement sticky in cover RH	Poor/no lubrication of the clutch shaft in cover RH/ uneven wear-out of clutch shaft/cover RH	Check and replace clutch shaft/cover RH	
	Clutch plates movement in clutch housing is sticky	Clutch plates/clutch housing damaged	Check and replace clutch plates/clutch assembly	
Clutch operation hard	Clutch lever movement in bracket hard	Clutch lever, bracket and pivot screw at handlebar end is dry without lubrication/excessive dirt accumulation	Clean and lubricate clutch lever, bracket and pivot screw at handlebar end	
	Inner cable movement sticky in outer cable	Inner cable strands broken and jammed inside outer cable/clutch lever bracket	Check and replace clutch cable	
		Teflon tube inside outer cable torn/damaged	Check and replace clutch cable	
	Clutch shaft movement hard in cover RH	Poor/no lubrication of the clutch shaft in cover RH/ uneven wear-out of clutch shaft/cover RH	Check and replace clutch shaft/cover RH	
	Clutch plates burnt and hard	Clutch plates burnt/hard/ clutch housing damaged	Check and replace clutch plates/clutch assembly	

Symptom	Possible Cause	Diagnosis	How to Fix	Recommended Specification
Throttle rotor movement sticky/ opening hard	Throttle cables are stuck between frame and fuel tank	Throttle cables stuck/ jammed between frame and fuel tank	Check cable routing and proper strapping to frame	
	Throttle rotor movement in housing is sticky	Throttle rotor area in the housing is dry/heavy dirt accumulation	Check and lubricate throttle rotor and housing in handlebar	
	Throttle rotor cable seating area damaged	The eyelets in the throttle rotor are damaged/inner cable eyelets not seating correctly in the rotor eyelets	Check and replace throttle cables/throttle rotor	
	Inner cables movement sticky in outer cable	Throttle cables inner strands broken	Check and replace throttle cables	
		Teflon coating in between inner/outer throttle cables damaged		

HANDLEBAR

CONTENTS PAGE

6.3 Handlebar 376

Dismantling 376

6.3.1.Aggregates of Handlebar 376

6.3.2. Handlebar 379

6.3.3. Upper Yoke 380

Inspection 381

Assembly 381

6.3.4. Upper Yoke 381

6.3.5. Handlebar 382

6.3.6.Aggregates of Handlebar 383

Troubleshooting 388

6.3 Handlebar

Dismantling

6.3.1.Aggregates of Handlebar

- Remove the Throttle cable.
- Remove the Clutch cable.
- Remove the Brake master cylinder front.
- Disconnect Electrical connections on LH and RH handlebars.
- Detach the Cable routing straps.
- Lift dust cup **(a)**, loosen Hex nut **(M8) (b)** and rotate rear view mirror LH in clockwise direction.

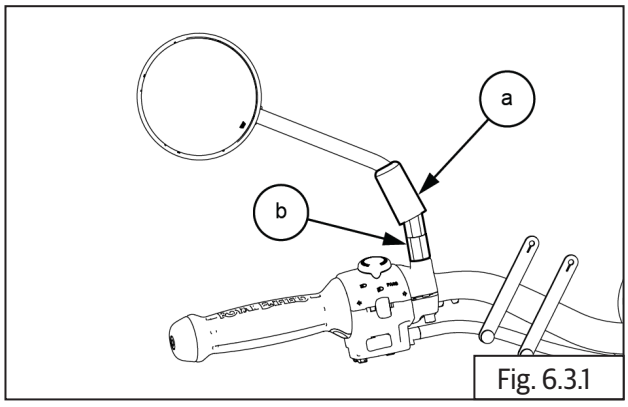

Fig. 6.3.1

	14 mm Double end spanner

⚠ CAUTION

Left hand thread!

DO NOT rotate the mirror after it comes to stop on the bracket as it will cause the bracket to crack.

Always position mirror and lock in place with rider seated on the motorcycle.

- Lift dust cup **(a)**, loosen Hex nut **(M8) (b)** and rotate rear view mirror RH in anticlockwise direction.

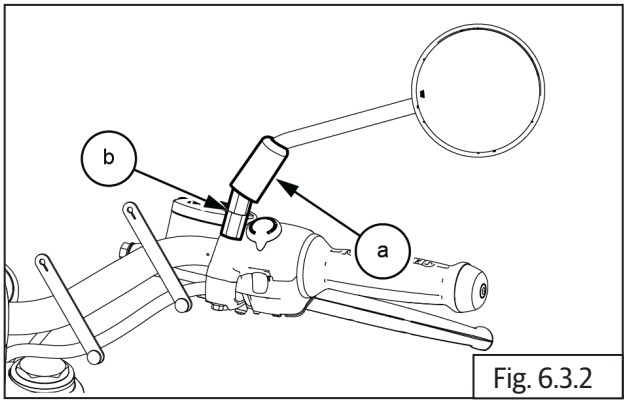

Fig. 6.3.2

	14 mm Double end spanner

- Loosen and remove Hex socket bolt **(M6) (a)** along with balancer **(b)** from handlebar RH.

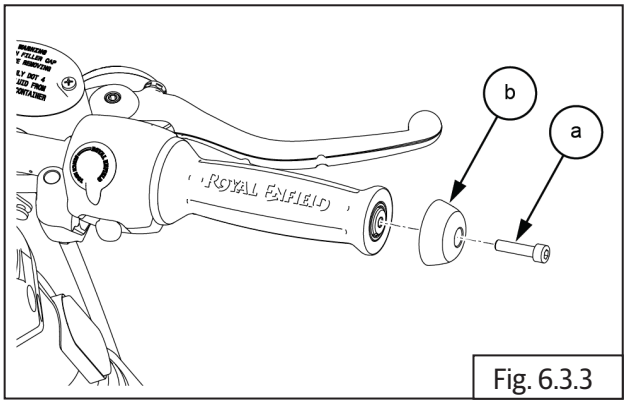

Fig. 6.3.3

	5 mm Allen key

- Disconnect brake lamp switch connectors **(a)** from front brake switch.

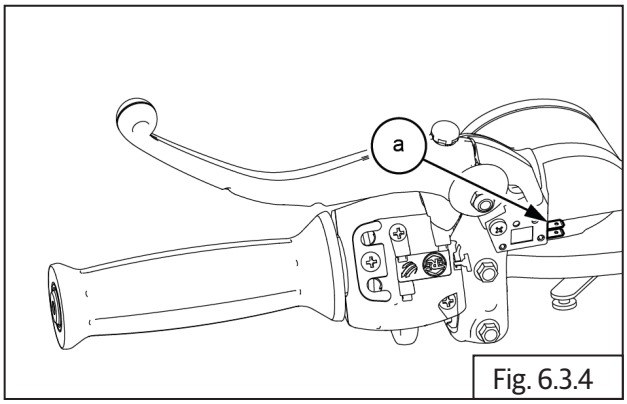

Fig. 6.3.4

- Loosen and remove 1 Nos. screws **(a)** from throttle cable stopper plate **(b)** .

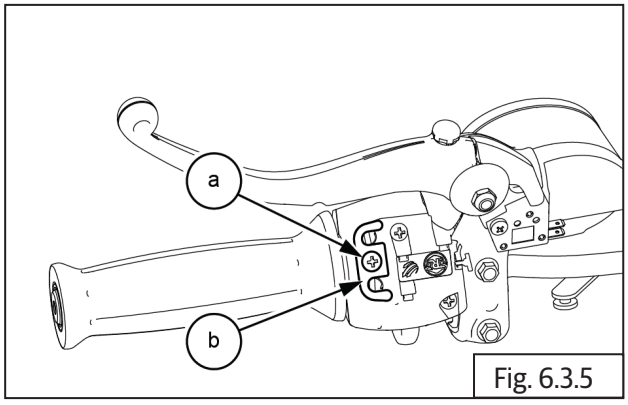

Fig. 6.3.5

	Phillips screw driver

- Loosen and remove 2 Nos. Switch module screws **(a)** from RH handlebar.

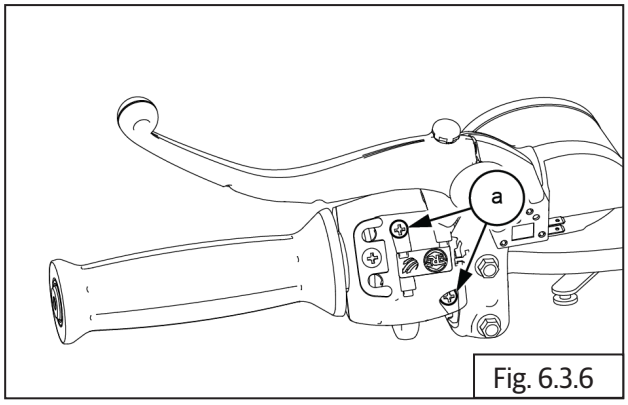

Fig. 6.3.6

	Phillips screw driver

- Gently separate switch module top **(a)** and bottom **(b)** from handlebar RH.

⚠ CAUTION

Support RH switch module carefully after removal.

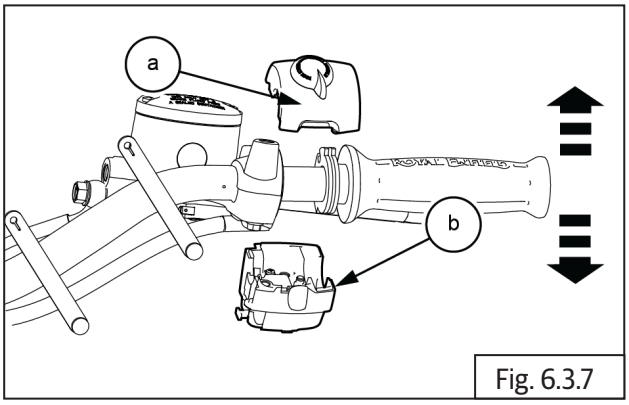

Fig. 6.3.7

- Disconnect throttle cables.
- Gently remove throttle rotor **(a)** from the handlebar RH.

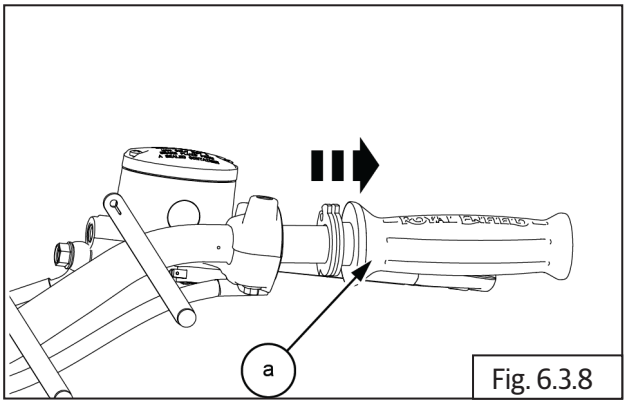

Fig. 6.3.8

- Loosen and remove 2 Nos. Hex flange head bolt **(M5) (a)** master cylinder.

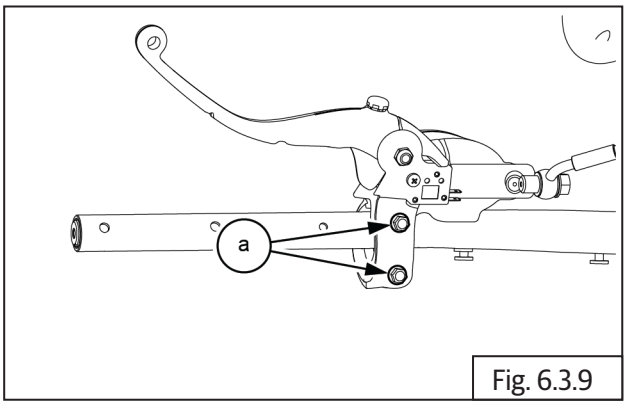

Fig. 6.3.9

	8 mm Socket with Ratchet

- Remove master cylinder assembly **(a)** along with cap **(b)** from RH handlebar.

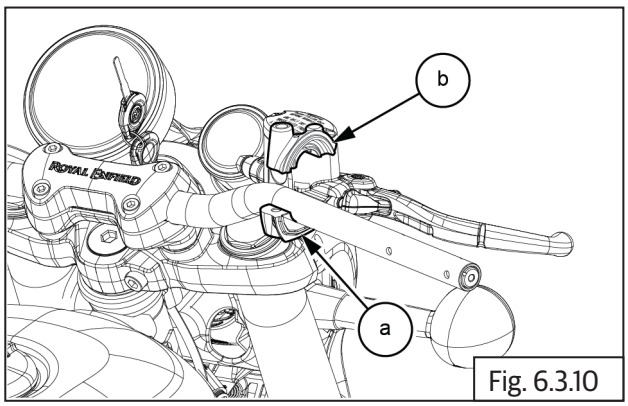

Fig. 6.3.10

⚠ CAUTION

Ensure master cylinder assembly is supported after removing.

- Loosen and remove Hex socket head bolt **(M6) (a)** along with balancer **(b)** from handlebar LH.

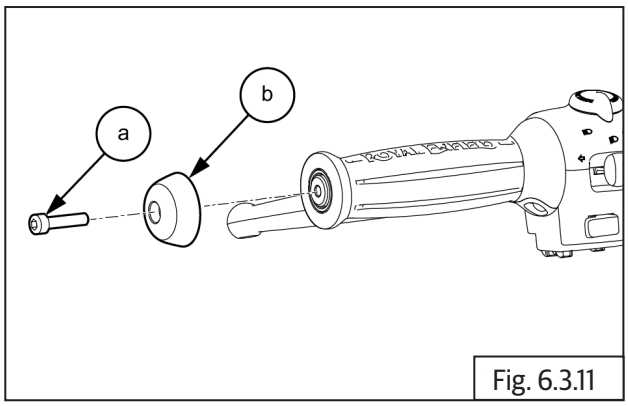

Fig. 6.3.11

	5 mm Socket with Ratchet

- Loosen and remove 2 Nos. Torx screws **(a)** from LH handlebar grip.

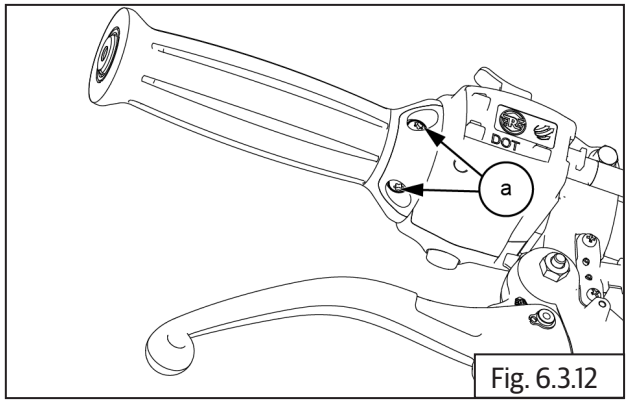

Fig. 6.3.12

	T 20 Torx Socket with Ratchet

- Gently remove grip **(a)** from handlebar.

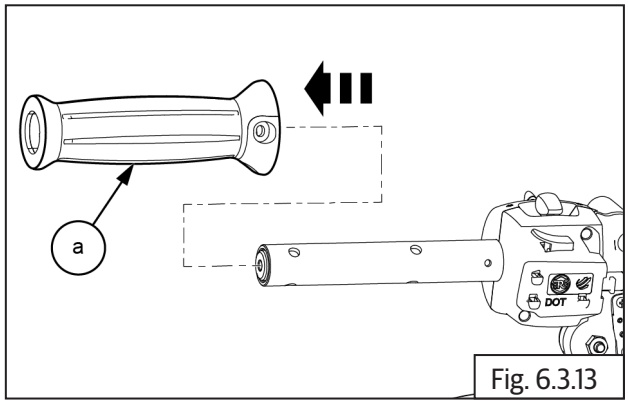

Fig. 6.3.13

- Loosen and remove 2 Nos. screws **(a)** from switch module on handlebar LH.

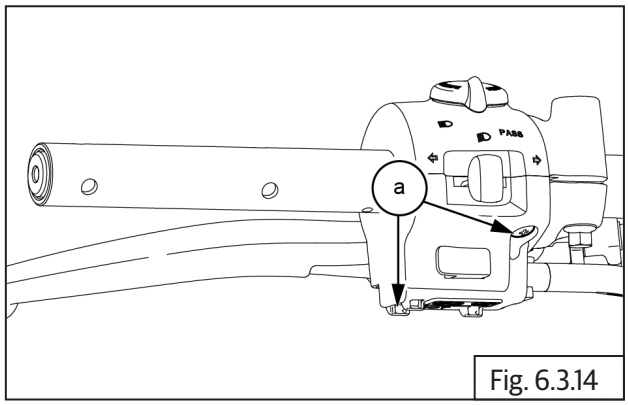

Fig. 6.3.14

	Phillips screw driver

- Gently separate top **(a)** and bottom **(b)** switch module and remove from handlebar LH.

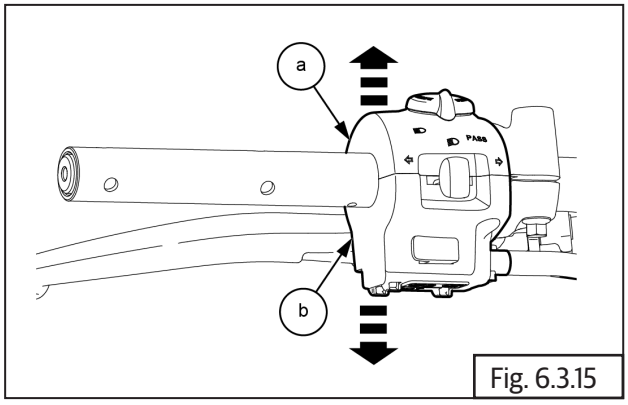

Fig. 6.3.15

- Disconnect clutch cable connections from handlebar LH.
- Loosen Hex flanged head bolt **(M6) (a)** sufficiently on clutch lever bracket LH.

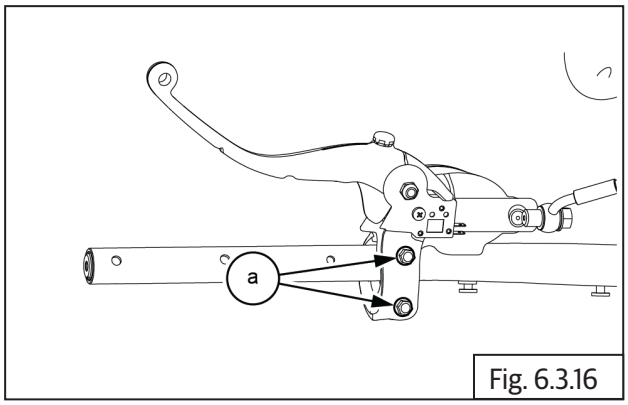

Fig. 6.3.16

	10 mm Socket with Ratchet

- Gently rotate and pull out clutch lever bracket LH **(a)** from handlebar (clip-on) LH.

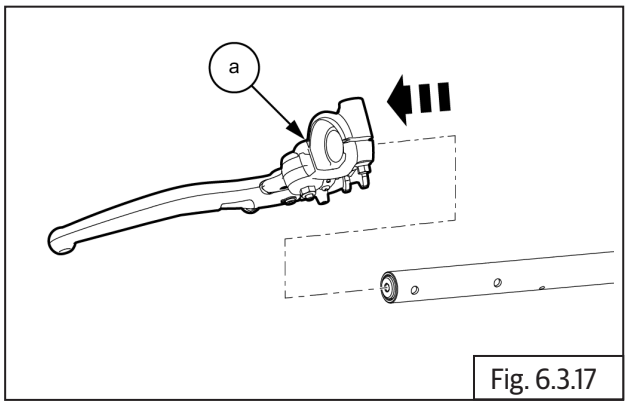

Fig. 6.3.17

- Remove the all rubber strap **(a)** from handlebar.

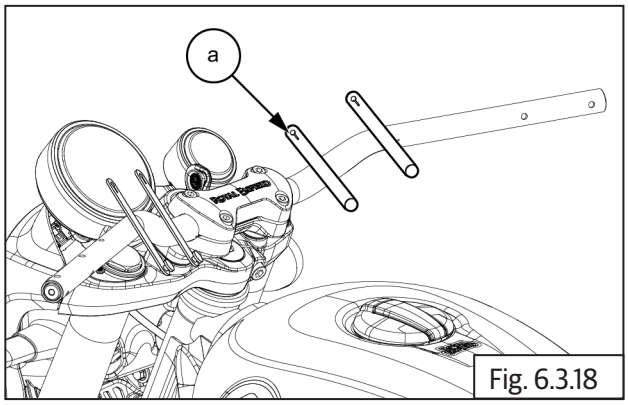

Fig. 6.3.18

6.3.2. Handlebar

- Loosen and remove 4 Nos. Hex socket bolts **(M8) (a)** from clamps on handlebar.

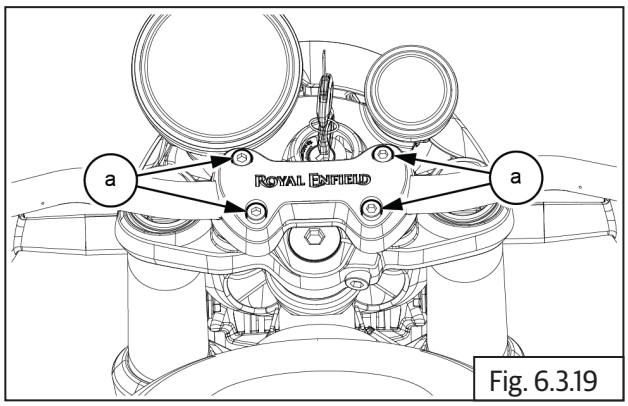

Fig. 6.3.19

	6 mm Allen socket with Ratchet

- Remove upper clamp **(a)** from raiser handlebar**.**

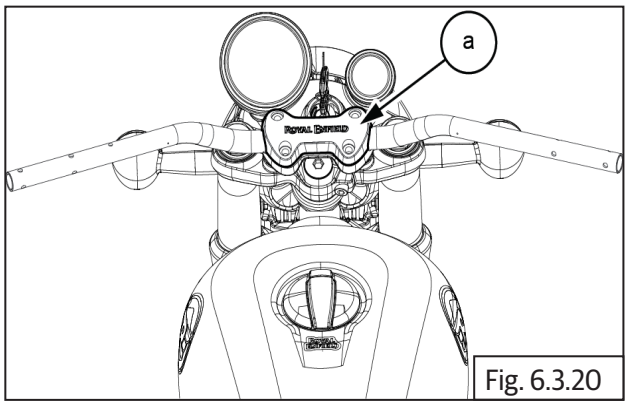

Fig. 6.3.20

- Remove handlebar **(a)** from raiser handlebar.

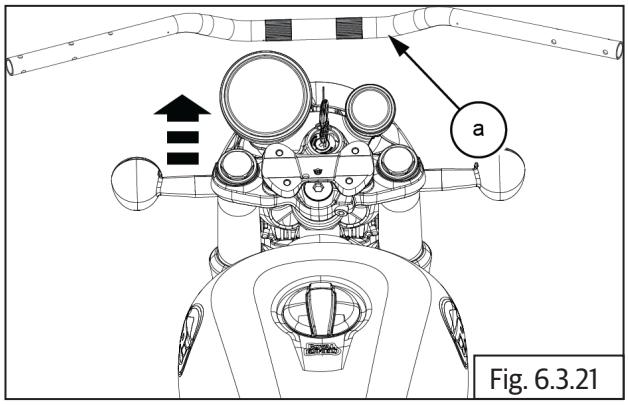

Fig. 6.3.21

- Loosen and remove 2 Nos. Hex head flanged bolts **(M10) (a)** from raiser handlebar.

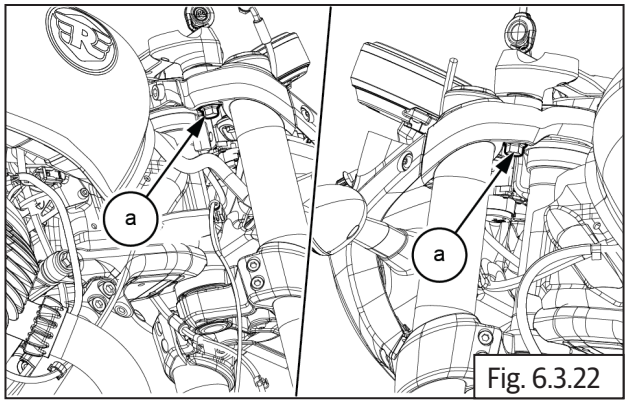

Fig. 6.3.22

	14 mm Socket with Ratchet

- Remove handlebar raiser **(a)** from upper yoke.

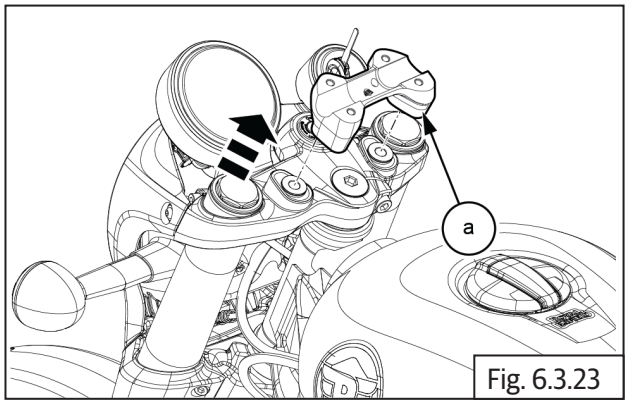

Fig. 6.3.23

- Remove flange sleeve 4 Nos **(b)** and 4 Nos rubber bush **(a)** from upper yoke.

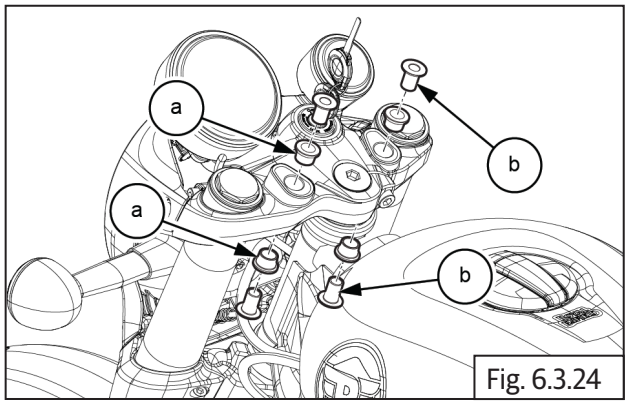

Fig. 6.3.24

6.3.3. Upper Yoke

- Remove ignition switch.
- Remove handlebar.
- Remove head lamp with cowl assembly.
- Loosen and remove 1 Nos. cap bolts **(M8) (a)** from LHS upper yoke.

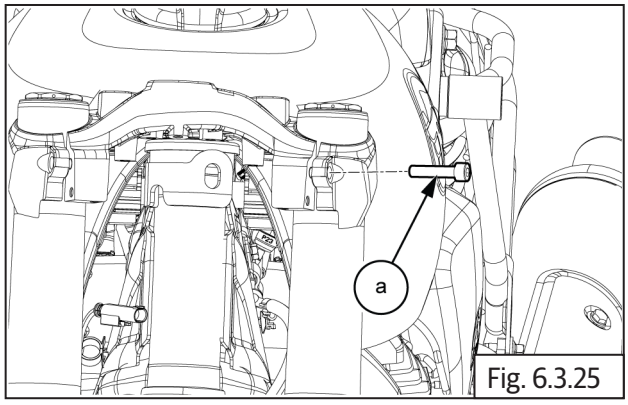

Fig. 6.3.25

	6 mm Allen socket with Ratchet

- Loosen and remove 1 Nos. cap bolts **(M8) (a)** from RHS upper yoke.

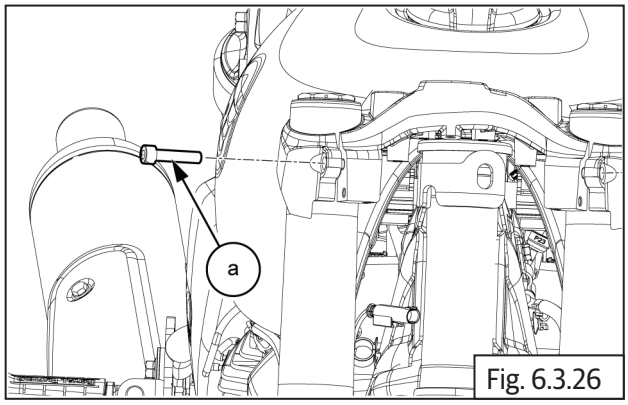

Fig. 6.3.26

	6 mm Allen socket with Ratchet

- Loosen and remove 1 Nos. cap bolts **(M8) (a)** from middle upper yoke.

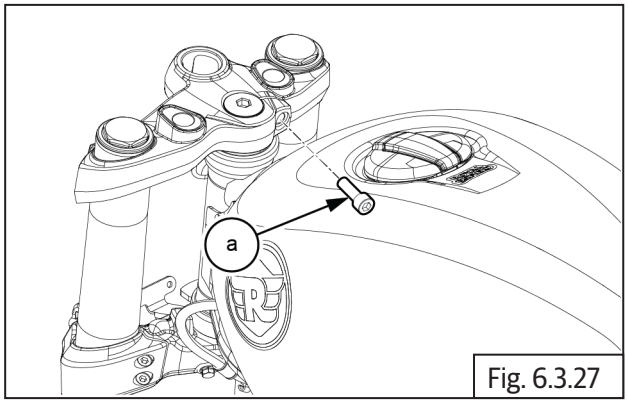

Fig. 6.3.27

	6 mm Allen socket with Ratchet

- Gently tap and pull out upper yoke **(a)** from LH and RH fork assembly.

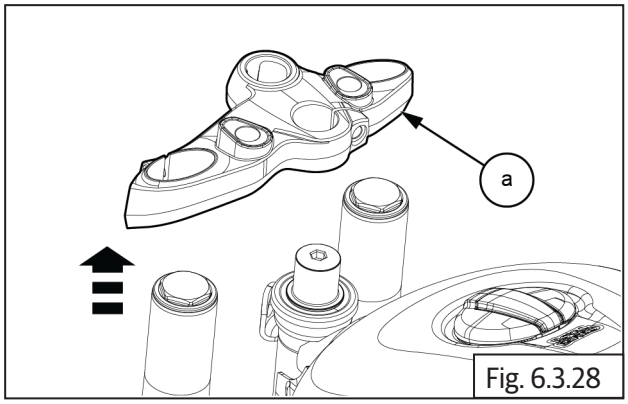

Fig. 6.3.28

Inspection

- Inspect handlebar for any bends, cracks or damages. Replace if necessary.
- Inspect rubber grip tightness and replace if it has lost grip.

Assembly

6.3.4. Upper Yoke

- Locate upper yoke **(a)** on the LH and RH fork assembly and ensure both forks seated properly in the upper yoke.

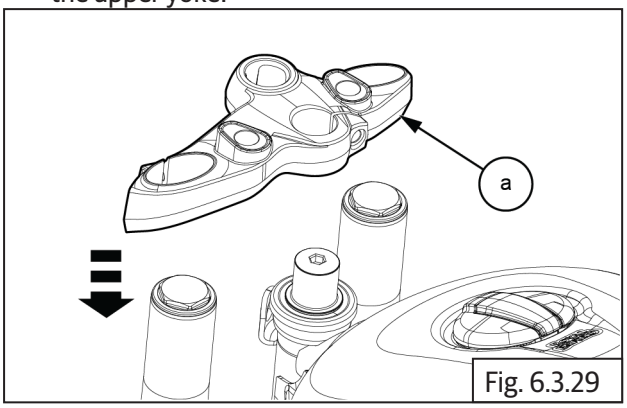

Fig. 6.3.29

- Insert and tighten 1 Nos. cap bolts **(M8) (a)** on middle upper yoke.

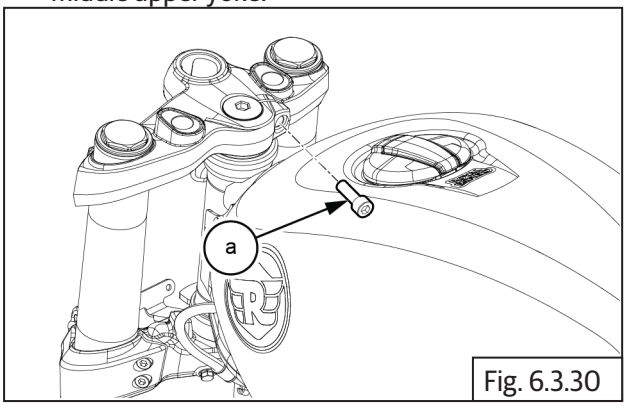

Fig. 6.3.30

	6 mm Allen socket with Ratchet
Torque	20 N-m / 2.0 kgf-m

- Insert and tighten 1 Nos. cap bolts **(M8) (a)** on RHS upper yoke.

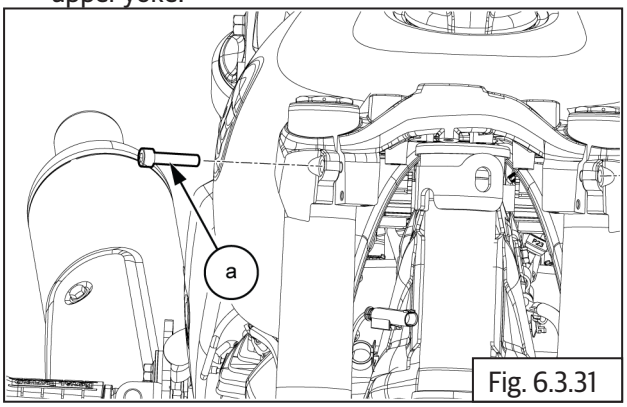

Fig. 6.3.31

	6 mm Allen socket with Ratchet
Torque	28 N-m / 2.8 kgf-m

- Insert and tighten 1 Nos. cap bolt **(M8) (a)** on LHS upper yoke.

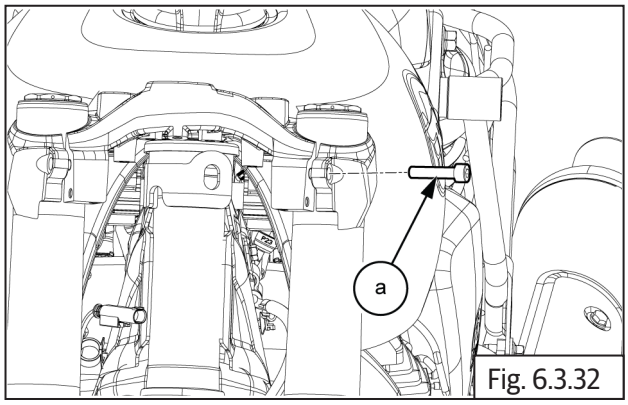

Fig. 6.3.32

	6 mm Allen socket with Ratchet
Torque	28 N-m / 2.8 kgf-m

- Install ignition switch.
- Install handlebar.
- Install head lamp with cowl assembly.

6.3.5. Handlebar

- Locate the flange sleeve 4 Nos **(b)** and 4 Nos rubber bush **(a)** on upper yoke.

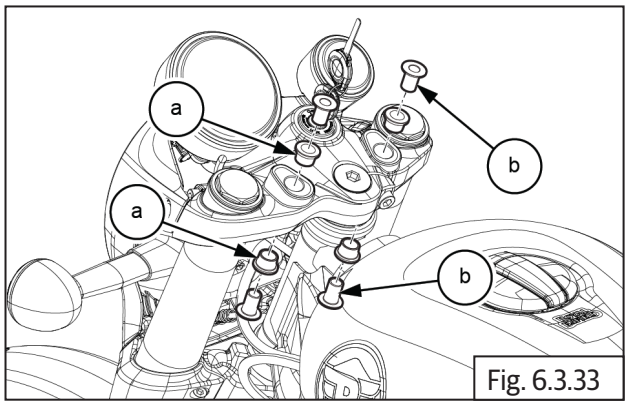

Fig. 6.3.33

- Locate raiser handlebar **(a)** into upper yoke .

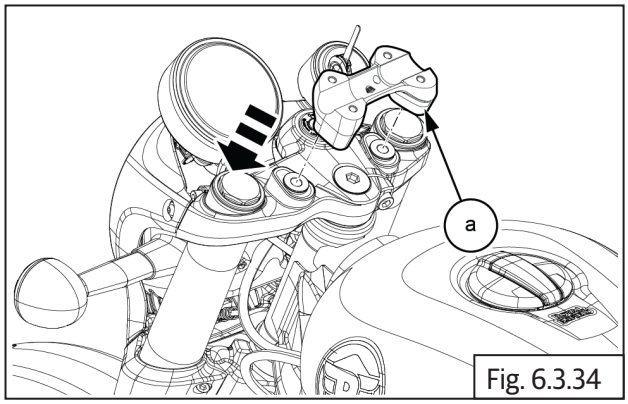

Fig. 6.3.34

- Locate and tighten 2 Nos. Hex flange head bolts **(M10) (a)** into upper yoke and raiser handlebar **.**

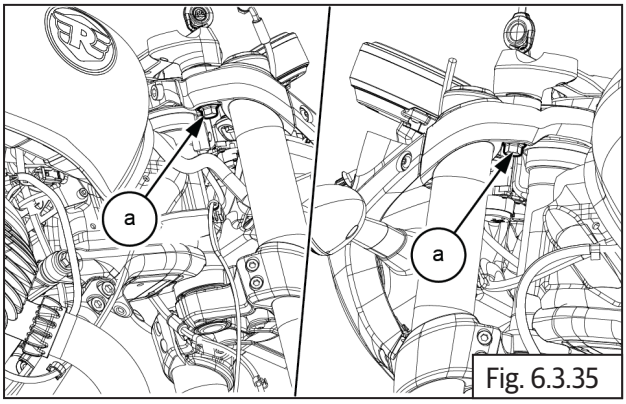

Fig. 6.3.35

	14 mm Socket with Ratchet
Torque	45 N-m/4.5 kgf-m

- Assemble handlebar **(a)** into raiser handlebar **(b).**

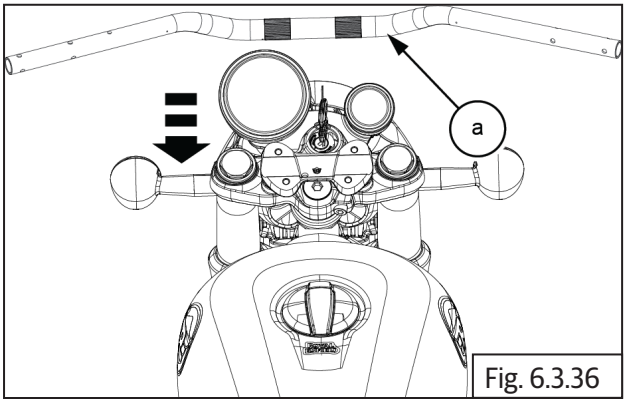

Fig. 6.3.36

- Install clamp handlebar **(a)** into handlebar.

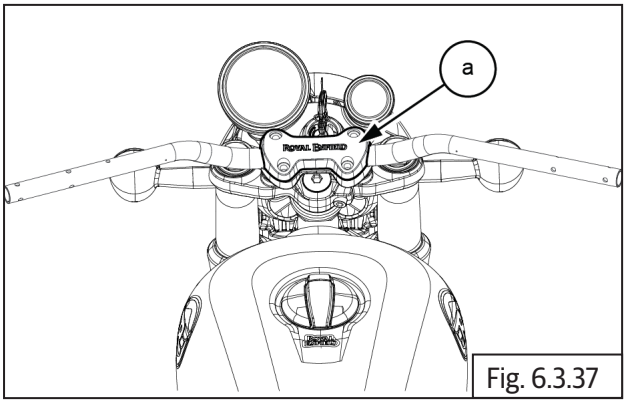

Fig. 6.3.37

NOTE
• *Ensure the steering handlebar align marks/dots are matched with clamp handlebar parallel.*

- Locate and tighten 4 Nos. Hex socket bolts **(M8) (a)** into clamp handlebar.

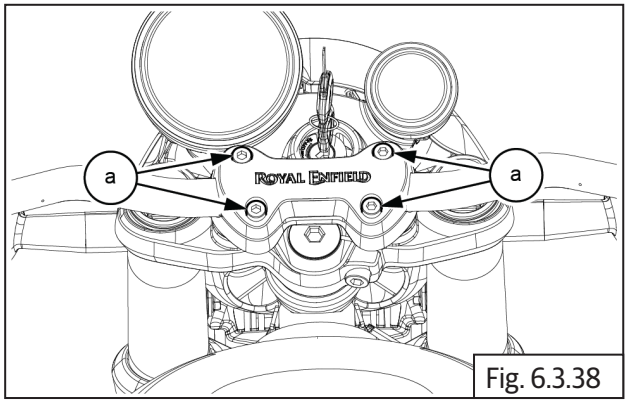

Fig. 6.3.38

	6 mm Allen socket with Ratchet
Torque	20 N-m/2.0 kgf-m

6.3.6. Aggregates of Handlebar

- Insert clutch lever bracket **(a)** on LH handlebar till the mounting hole switch module is visible.

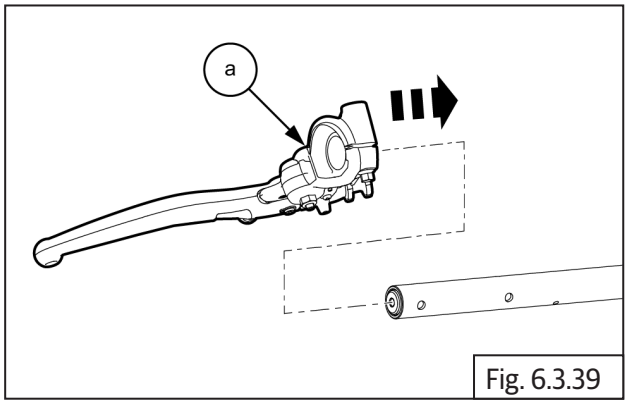

Fig. 6.3.39

- Locate and tighten Hex flanged head bolt **(M6) (a)** sufficiently on clutch lever bracket LH.

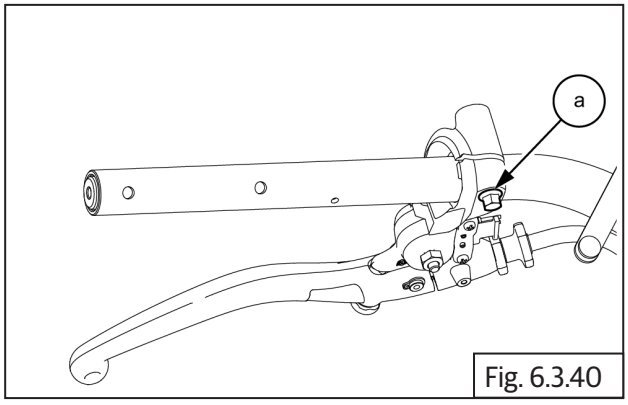

Fig. 6.3.40

	10 mm Socket with Ratchet

⚠ CAUTION

DO NOT over tighten bolt as it will cause bracket to crack.

- Assemble switch module top **(a)** and bottom **(b)** on handlebar LH. Ensure peg on LH switch module top half is correctly located in the hole in handlebar.

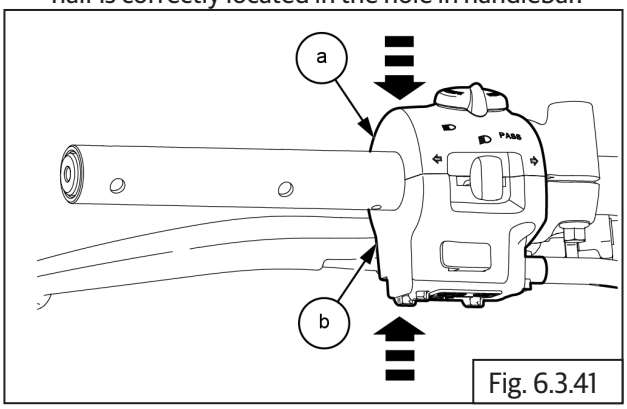

Fig. 6.3.41

- Insert the long screw **(a)** into front mounting hole of switch module LH from bottom and tighten just sufficiently.

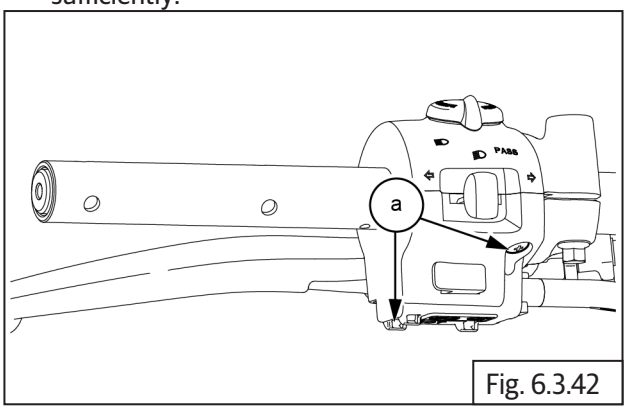

Fig. 6.3.42

⚠ CAUTION

DO NOT over tighten

	Phillips screw driver

- Locate and insert grip **(a)** into handlebar.

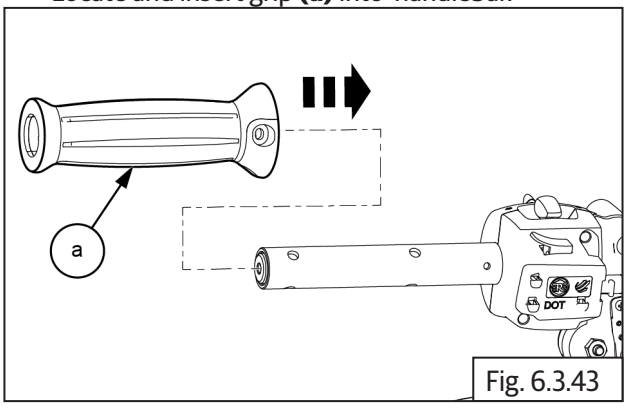

Fig. 6.3.43

- Locate and tighten 2 Nos. Torx screws **(a)** from LH handlebar grip.

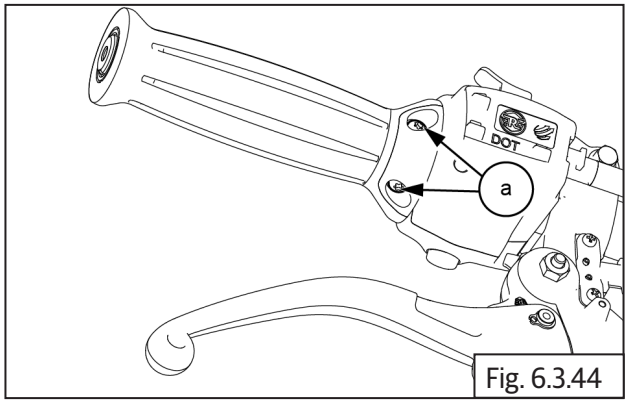

Fig. 6.3.44

T 20 Torx Socket with Ratchet

- Insert and tighten Hex socket head bolt **(M6) (a)** along with balancer **(b)** into handlebar LH.

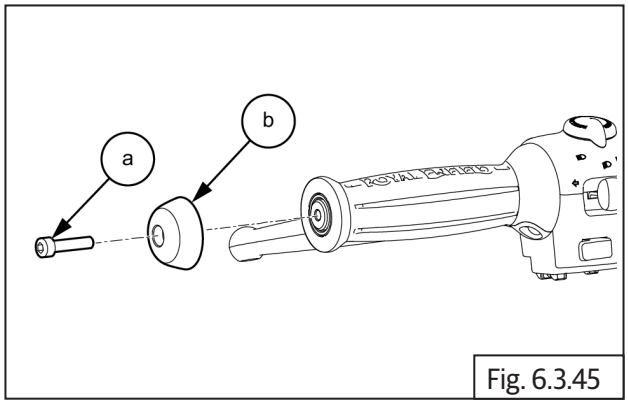

Fig. 6.3.45

5 mm Socket with Ratchet

- Assemble the clutch cable.
- Locate the master cylinder assembly **(a)** along with cap **(b)** on RH handlebar.

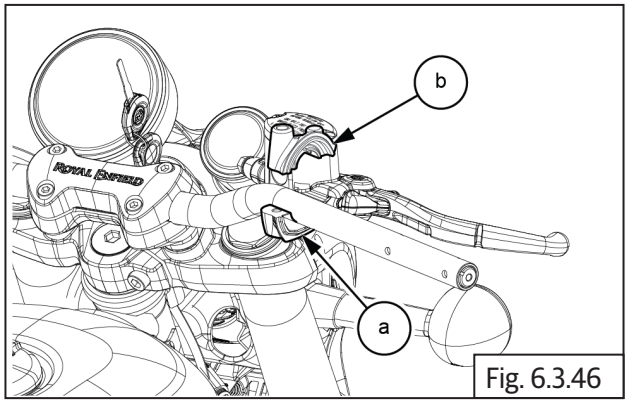

Fig. 6.3.46

- Insert and tighten 2 Nos. Hex flange head bolt **(M5) (a)** on master cylinder.

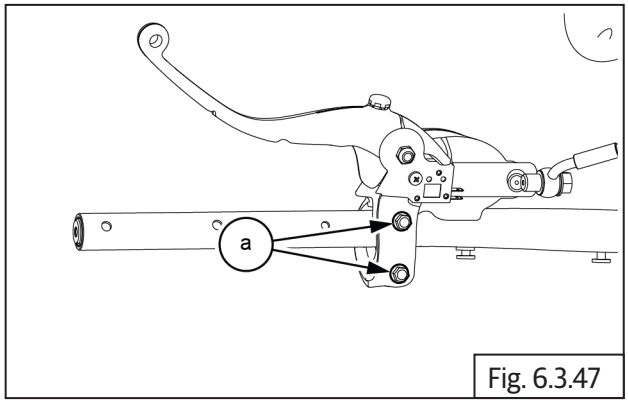

Fig. 6.3.47

8 mm Socket with Ratchet

- Lubricate throttle rotor grip inside with general purpose grease and assemble on handlebar RH.
- Ensure the cable slots on the rotor are facing above for correct and ease of assembly of inner cables.
- Gently locate and insert the throttle rotor **(a)** into the handlebar RH.

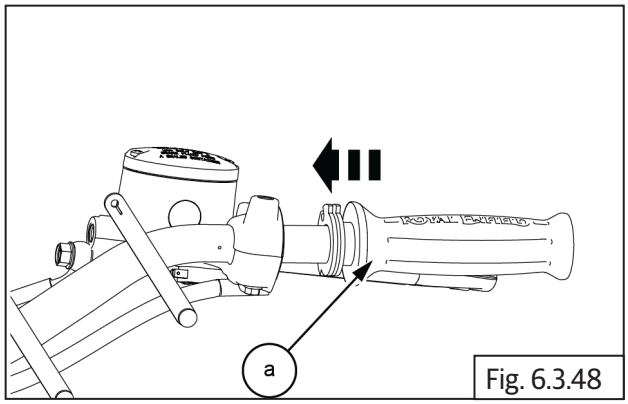

Fig. 6.3.48

- Connect throttle cables to throttle rotor grip.
- Assemble switch module top **(a)** and bottom **(b)** on handlebar RH. Ensure peg on RH switch module top half is correctly located in the hole in handlebar.

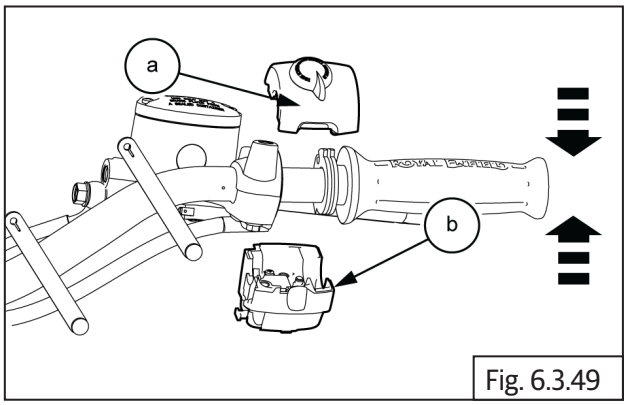

Fig. 6.3.49

- Insert long screw **(a)** into the front mounting hole of switch module RH from the bottom and tighten just sufficiently.

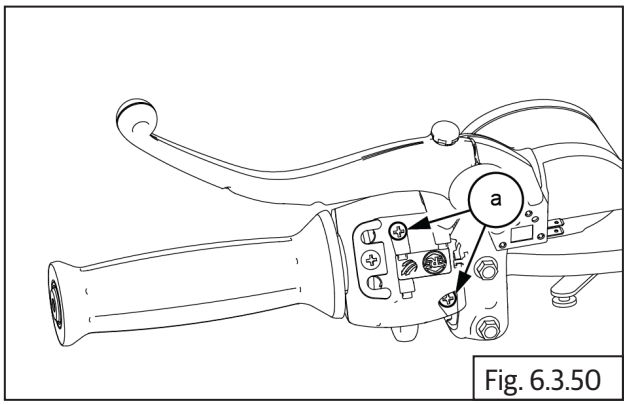

Fig. 6.3.50

⚠ CAUTION

DO NOT over tighten

	Phillips screw driver

- Insert and tighten 1 Nos. screws **(a)** on throttle cable stopper plate **(b)** .

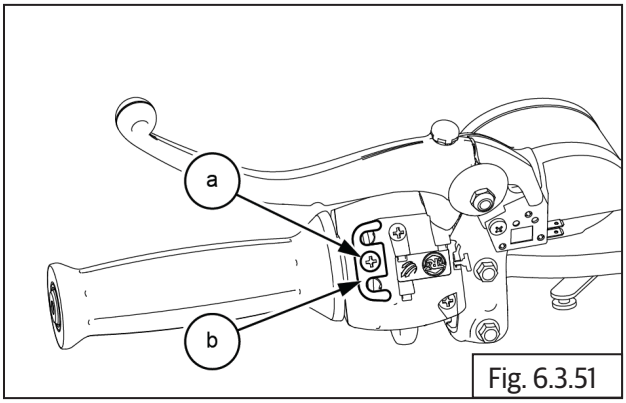

Fig. 6.3.51

	Phillips screw driver

- Connect the brake lamp switch connectors **(a)** .

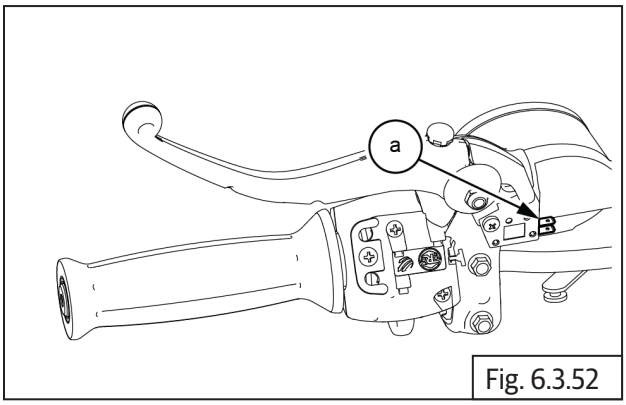

Fig. 6.3.52

- Insert and tighten Hex socket head bolt **(M6) (a)** along with balancer **(b)** into handlebar RH.

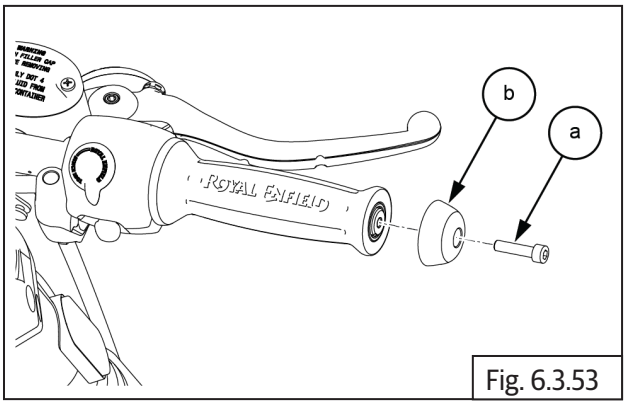

Fig. 6.3.53

	5 mm Socket with Ratchet

- Fix the all rubber strap **(a)** on handlebar.

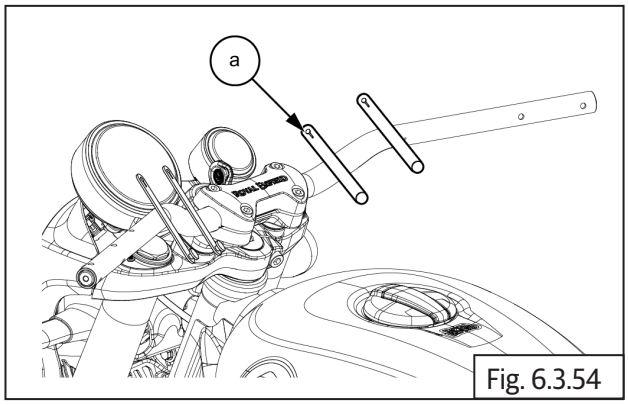

Fig. 6.3.54

- Ensure lock nut on mirror RH stem is fully tightened.
- Locate thread portion of rear view mirror stem on threads on master cylinder bracket, rotate clockwise till mirror comes to stop.
- Rotate mirror clockwise for adjusting the view and tighten lock nut **(M8) (b)** against bracket.
- Close the dust cap **(a)**.

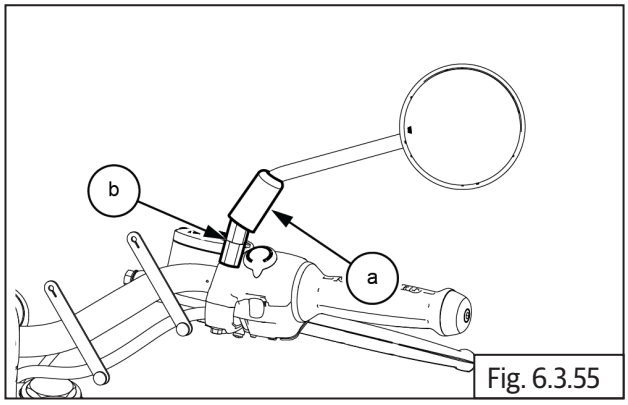

Fig. 6.3.55

	14 mm Double end spanner

⚠ CAUTION

DO NOT rotate the mirror after it comes to stop on the bracket as it will cause the bracket to crack.

Always position mirror and lock in place with rider seated on the motorcycle.

- Ensure lock nut on mirror LH stem is fully tightened.
- Locate threaded portion of rear view mirror stem on threads on clutch lever cylinder bracket, rotate anticlockwise till mirror comes to stop.
- Rotate mirror clockwise for adjusting the view and tighten lock nut **(M8) (b)** against bracket.
- Close the dust cap **(a)** .

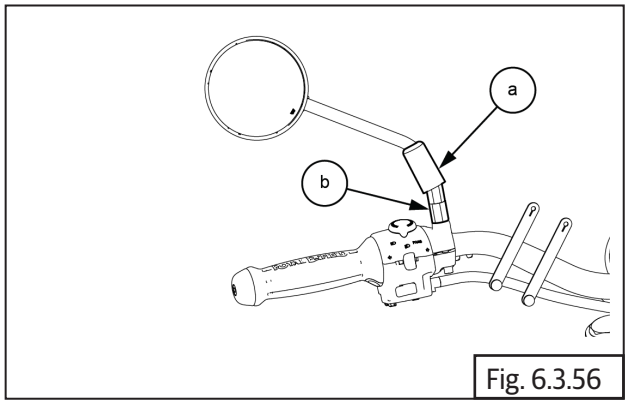

Fig. 6.3.56

	14 mm Double end spanner

⚠ CAUTION

Left hand thread

DO NOT rotate the mirror after it comes to stop on the bracket as it will cause the bracket to crack.

Always position mirror and lock in place with rider seated on the motorcycle.

- Install the Throttle cable.
- Install the Clutch cable.
- Install the Brake master cylinder front.
- Install the Electrical connections on LH and RH handlebars.
- Install the Cable routing straps.
- After assembly, check proper functioning of electrical components.

Troubleshooting

Symptom	Possible Cause	Diagnosis	How to Fix	Recommended Specification
Vibrations transmitted to rider while riding	Tyre pressures are more than recommended.	Improper front and rear tyre pressures.	Ensure correct tyre pressures.	**Solo:** Front tyre: 32 psi/2.24 kg/cm2. Rear tyre: 32 psi/2.24 kg/cm2. **With Pillion:** Front tyre: 36 psi/2.53 kg/cm2. Rear Tyre: 42 psi/2.95 kg/cm2.
	Handlebar balancers are loose.	Balancer mountings are loose/threads are worn-out.	Tighten balancer mountings/ replace balancers.	
	Clip-on pinch bolts are loose on fork main tubes. Handlebar clamp fasteners are loose on top yoke.	Fasteners loose/ threads worn-out	Check and tighten fasteners/replace fasteners/ handlebar clip-ons/top yoke	Torque: 20 N-m/2.0 kgf-m Torque: 45 N-m/4.5 kgf-m
	Handlebar is cracked at mounting location.	Clip-on/handlebar clamping locations has minor cracks.	Replace clip-ons/ handlebar	
Uneasiness/pain felt on one shoulder	Clip-on/s are bent. Handlebar is bent/ misaligned.	One or the other clip-on is bent/ handlebar is bent. Handlebar alignment dots are not correct.	Replace clip-ons/ handlebar. Ensure correct positioning of the handlebar alignment dots with respect to top yoke.	

NOTE
• *The troubleshooting given in this section is only related to issues with Handlebar. For complaints like unstable riding, wobbling, etc., it will be necessary to check other aggregates like wheel, front/rear suspension and so on.*

EXHAUST PIPE, SILENCER

CONTENTS **PAGE**

6.4 Exhaust pipe And Silencer 391

Dismantling 391

6.4.1. Hego / Oxygen Sensor Connectors 391

6.4.2. Silencer / Muffler 391

6.4.3. Exhaust Header Pipe 393

6.4.4. Hego / Oxygen Sensor 394

Assembly 394

6.4.5. Hego / Oxygen Sensor 394

6.4.6. Exhaust Header Pipe 395

6.4.7. Silencer / Muffler 396

6.4.8.Hego / Oxygen Sensor Connectors 398

Troubleshooting 399

6.4. Exhaust Pipes and Silencers

⚠ CAUTION

DO NOT perform any operation on exhaust pipes and silencers soon after the motorcycle is OFF.

They can extremely hot and will cause serious injuries.

Always wait until the silencer is completely cooled down.

Dismantling

6.4.1. Hego / Oxygen Sensor Connectors

- Disconnect Hego/oxygen sensor connectors **(a)** from both LH and RH on the front side top of engine.

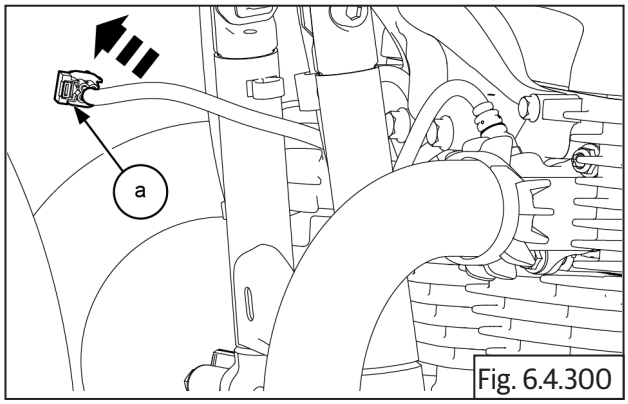

Fig. 6.4.300

6.4.2. Silencer / Muffler

- Loosen and remove 2 Nos. hex bolts **(M6) (a)** from the rear silencer guard at muffler end.

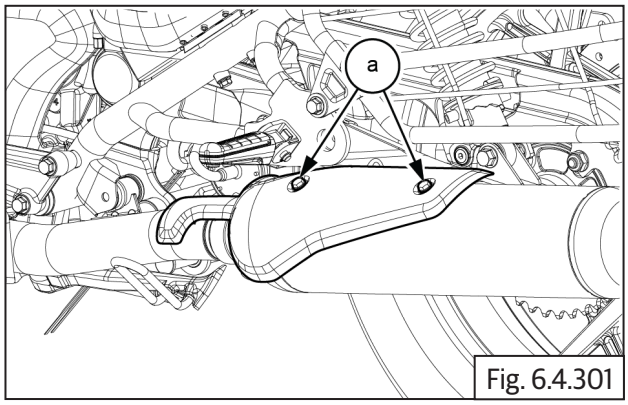

Fig. 6.4.301

	10 mm socket with ratchet

- Slightly slide and remove rear silencer guard **(a)** from muffler.

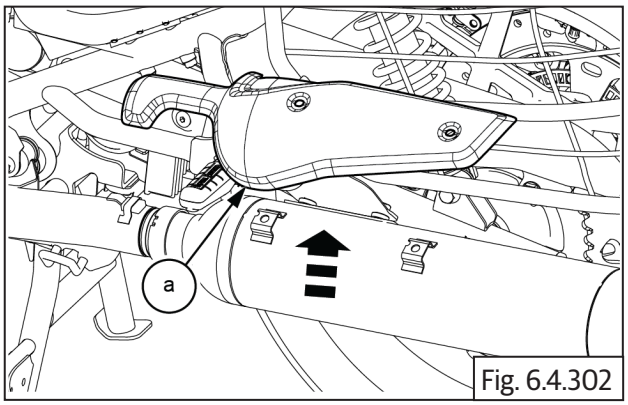

Fig. 6.4.302

- Remove 2 nos hex bolts **(M6) (a)** from front silencer guard at the header pipe end.

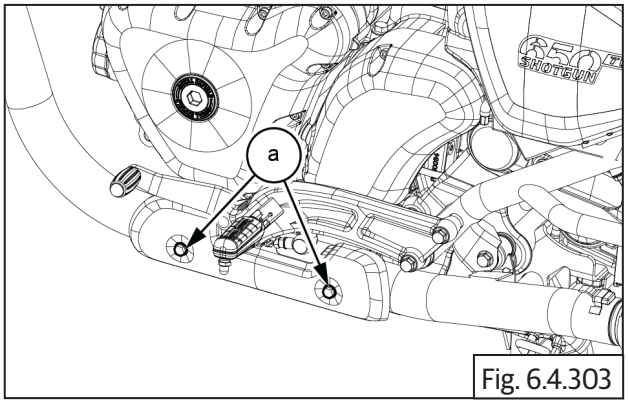

Fig. 6.4.303

	10 mm socket with ratchet

- Remove the front silencer guard **(a)** from header pipe.

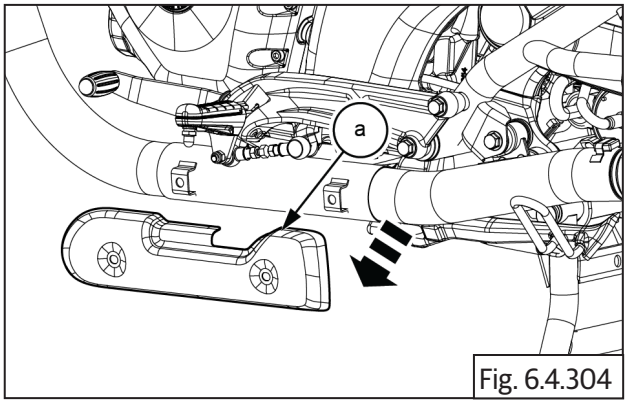

Fig. 6.4.304

- Remove the muffler mounting bolt **(M8) (a)** along with two washers **(b)** and two rubber grommets **(c)** from left side of the frame.

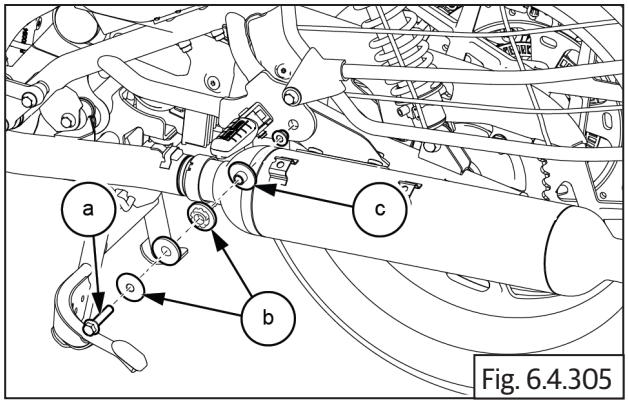

Fig. 6.4.305

	12 mm socket with ratchet

- Remove flange bolt **(M8) (a)** from exhaust muffler.

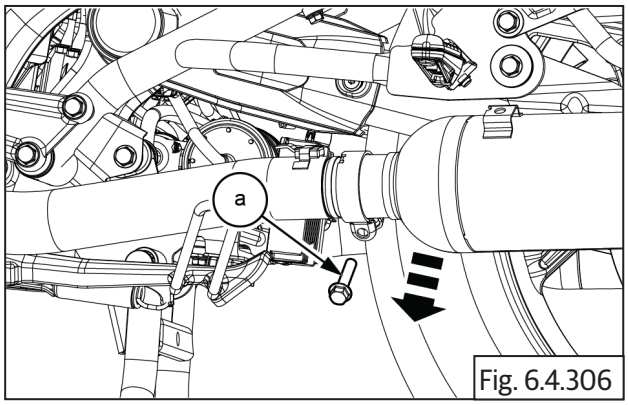

Fig. 6.4.306

	12 mm socket with ratchet

- Gently pull the exhaust muffler **(a)** outwards to remove.
- Ensure Exhaust pipe is supported suitably.

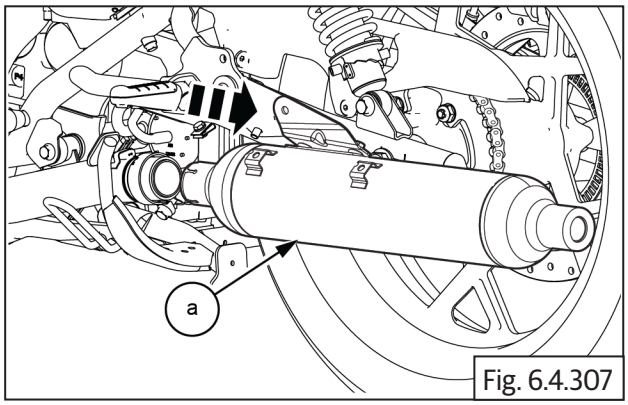

Fig. 6.4.307

- Remove gasket from **(a)** from exhaust muffler .

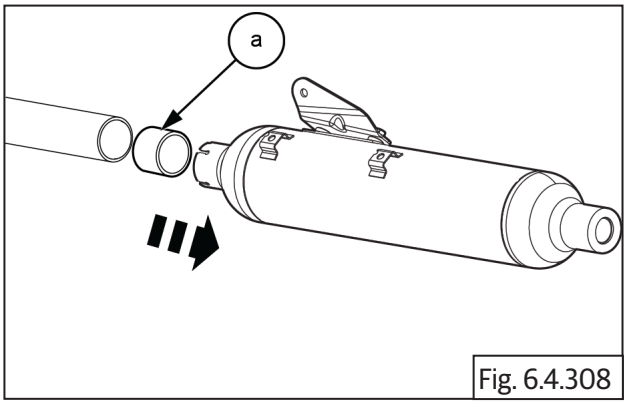

Fig. 6.4.308

- Loosen and remove 2nos bolts **(M8) (a)** from exhaust muffler bracket.

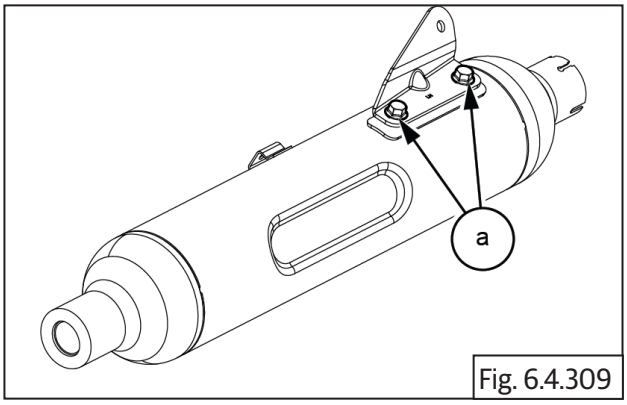

Fig. 6.4.309

- Remove bracket **(b)** along with bolts **(a)** from exhaust muffler.

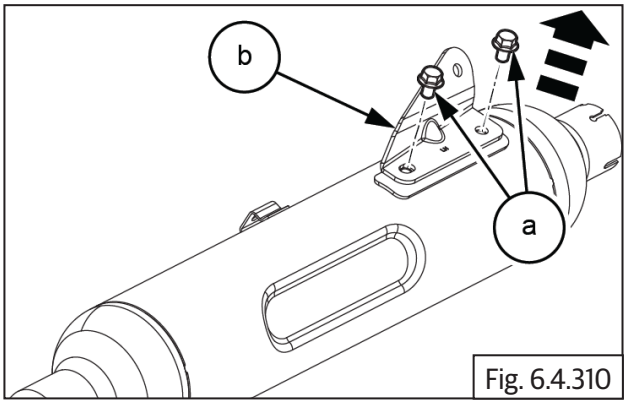

Fig. 6.4.310

	12 mm socket with ratchet

6.4.3. Exhaust Header Pipe

- Loosen and remove 2 nos nuts **(M8) (a)** from the cylinder head assembly.

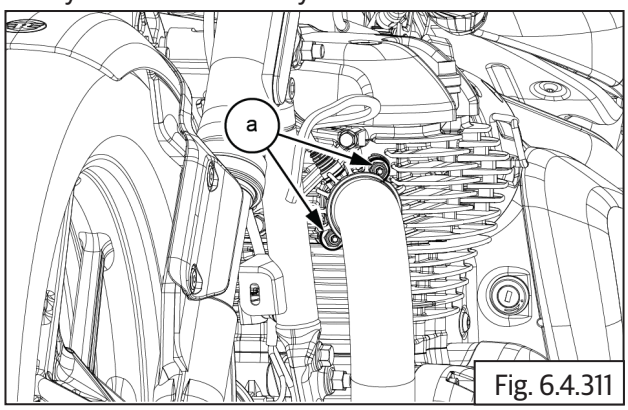

Fig. 6.4.311

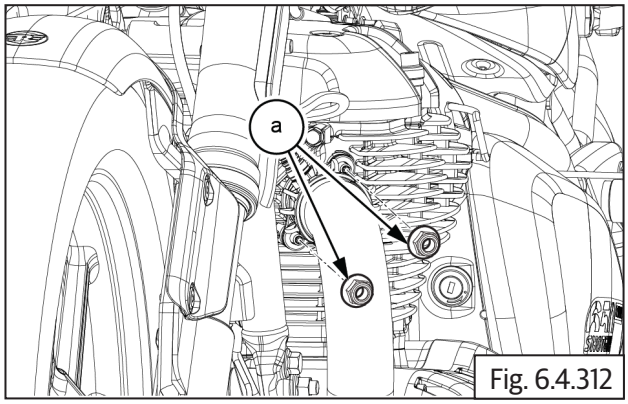

Fig. 6.4.312

	12 mm socket with ratchet

- Remove header pipe mounting bolt **(a) (M8)** along with two washers **(b)** and two rubber grommets **(c)** from left side of the frame.

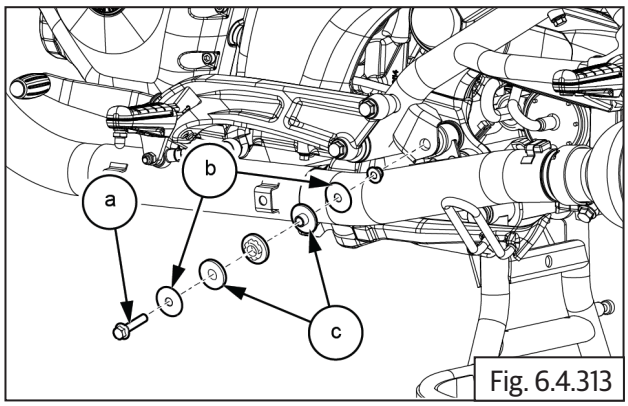

Fig. 6.4.313

	12 mm socket with ratchet

- Remove the exhaust header pipe **(a)**.

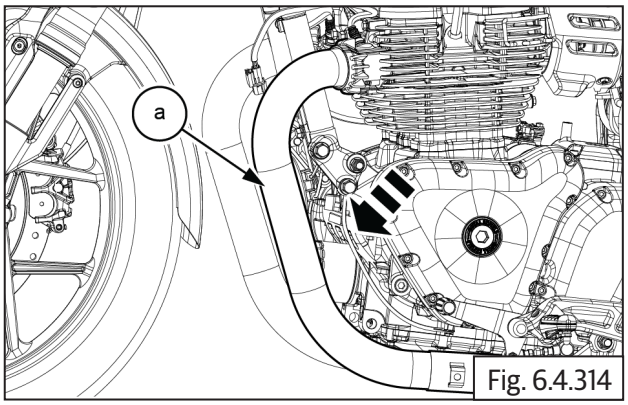

Fig. 6.4.314

- Remove 2 nos mounting fins **(a)** from header pipe.

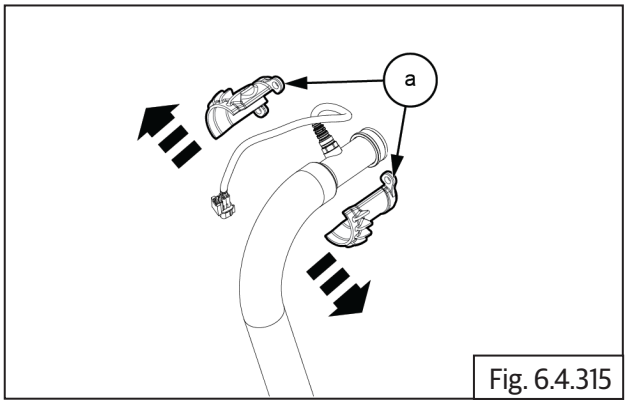

Fig. 6.4.315

- Remove exhaust gasket **(a)** from cylinder head.

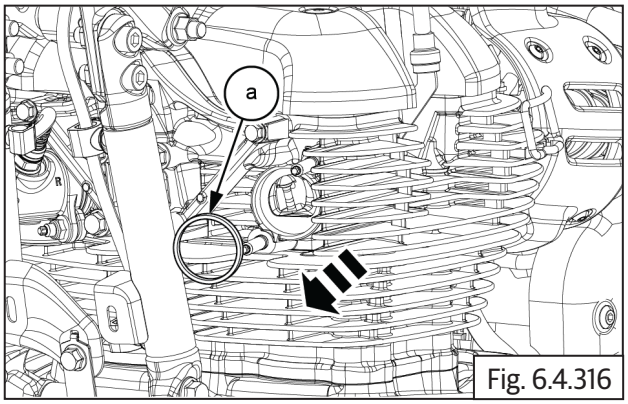

Fig. 6.4.316

6.4.4. Hego/Oxygen Sensor

- Gently loosen and remove the Hego / Oxygen sensor **(a)** from the exhaust pipes LH & RH.

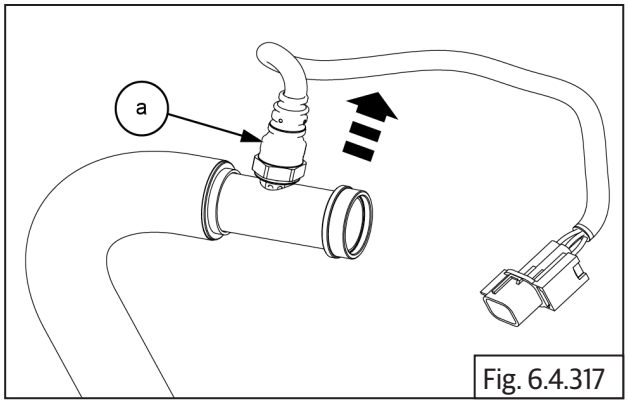

Fig. 6.4.317

	17 mm Double end spanner/Deep groove spanner

- Repeat the entire removal procedure to RHS silencer **(a)**.

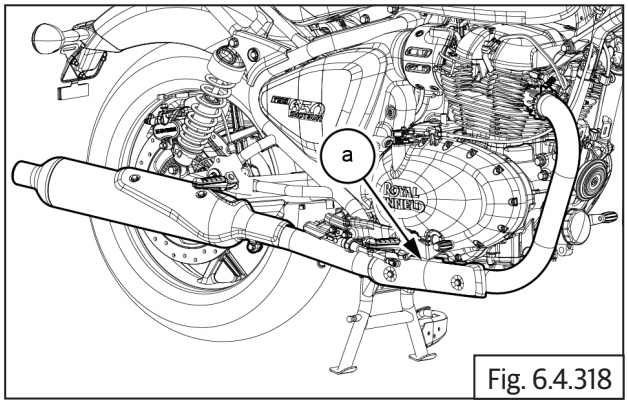

Fig. 6.4.318

Assembly

6.4.5. Hego/Oxygen Sensor

- Locate and tighten Oxygen sensor **(a)** on the exhaust header pipe.

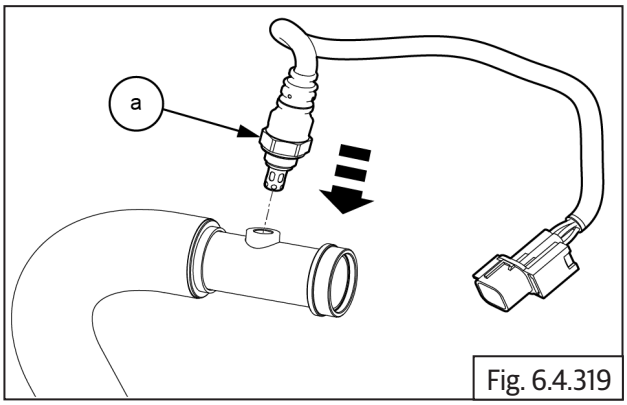

Fig. 6.4.319

	17 mm Double end spanner/Deep groove spanner
Torque	18 N-m / 1.8 kgf-m

⚠ CAUTION

DO NOT over tighten as it damage the sensor.

NOTE

- Refer below image for tighten sequence before and after installing exhaust assembly on LH and RH side.

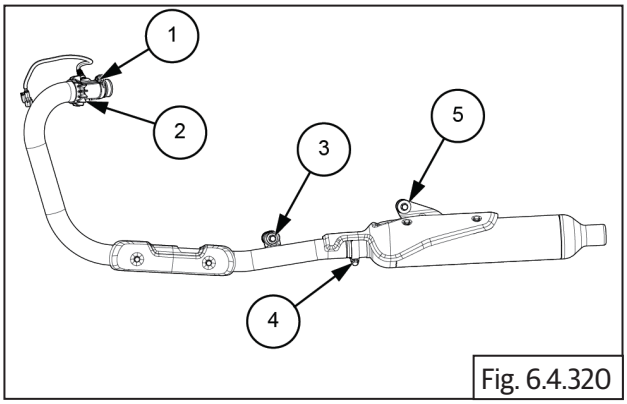

Fig. 6.4.320

6.4.6. Exhaust Header Pipe

- Locate exhaust gasket **(a)** into cylinder head.

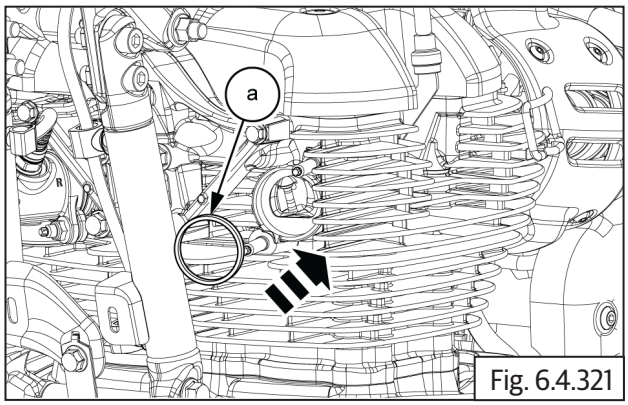

Fig. 6.4.321

- Locate 2 nos mounting fins **(a)** into header pipe.

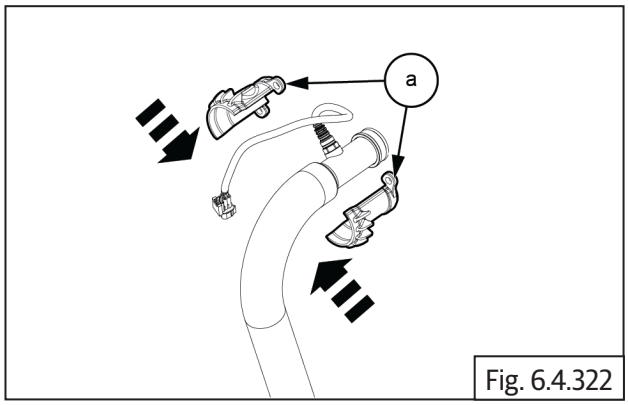

Fig. 6.4.322

- Locate exhaust pipe **(a)** into exhaust manifold on the cylinder head and ensure the exhaust pipe flange is properly located on the studs.

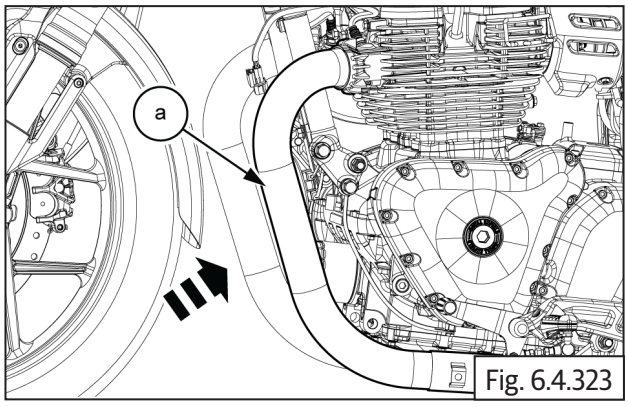

Fig. 6.4.323

- Assemble 2 nos hex nuts **(M8) (a)** on the studs and hand tight it to align the rear end mounting.

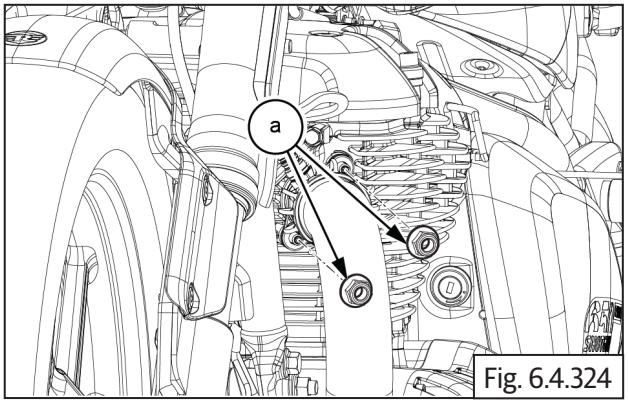

Fig. 6.4.324

	12 mm socket with ratchet
Torque	25 N-m / 2.5 kgf-m

- Locate and tighten header pipe mounting bolt **(a) (M8)** along with two washers **(b)** and two rubber grommets **(c)** on left side of the frame.

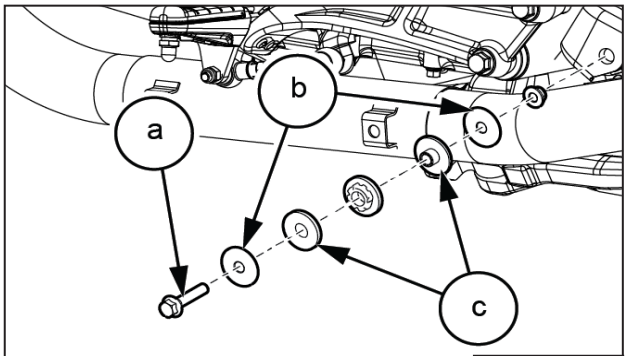

Fig. 6.4.325

	12 mm socket with ratchet
Torque	25 N-m / 2.5 kgf-m

6.4.7. Silencer / muffler

- Locate bracket **(b)** along with bolts **(a)** on exhaust muffler.

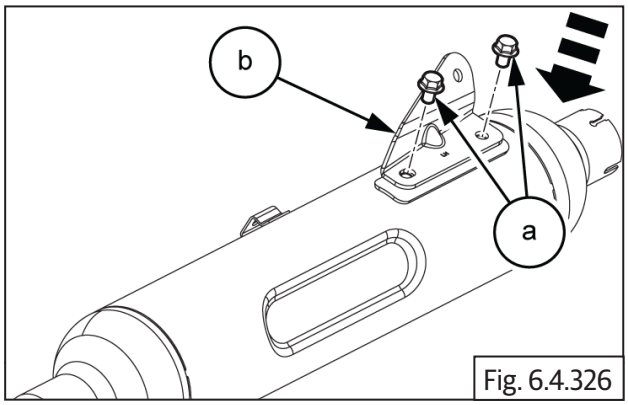

Fig. 6.4.326

- Tighten 2nos bolts **(M8) (a)** on exhaust muffler bracket.

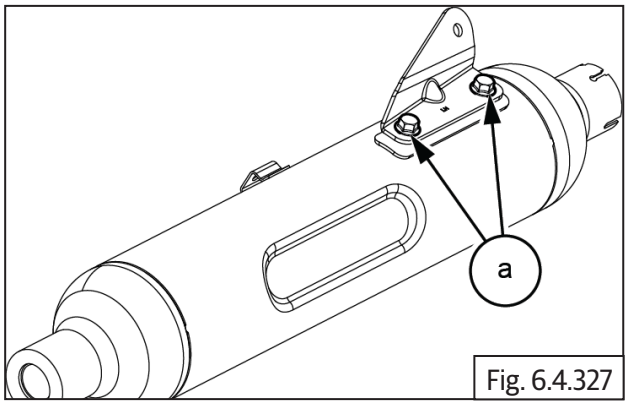

Fig. 6.4.327

	12 mm socket with ratchet
Torque	25 N-m / 2.5 kgf-m

- Locate the gasket **(a)** into header pipe .

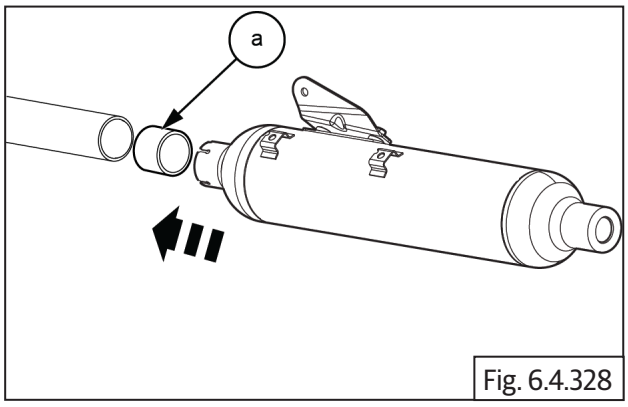

Fig. 6.4.328

- Insert the exhaust muffler **(a)** into header pipe.

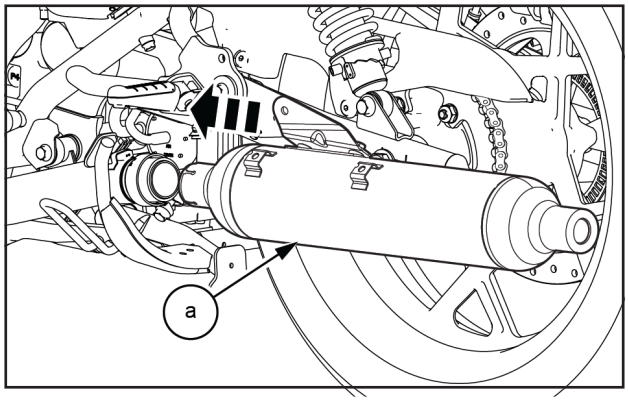

- Tighten flange bolt **(M8) (a)** on exhaust muffler.

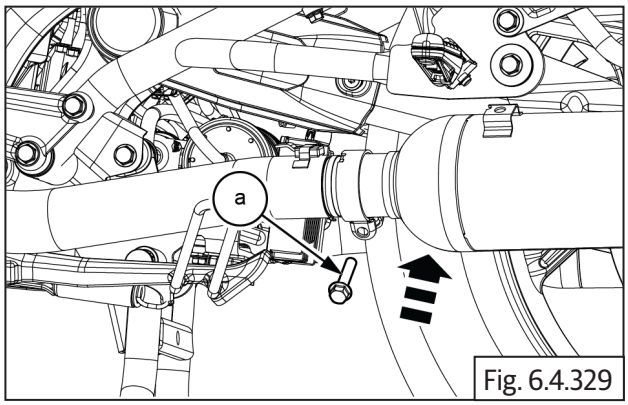

Fig. 6.4.329

- Refer below image for both **LH** and **RH** clamp orientation .

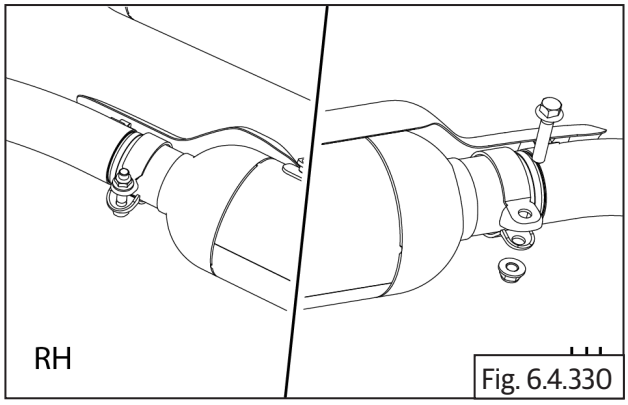

Fig. 6.4.330

	12 mm socket with ratchet
Torque	32 N-m / 3.2 kgf-m

- Locate and tighten muffler mounting bolt **(a) (M8)** along with two washers **(b)** and two rubber grommets **(c)** on left side of the frame.

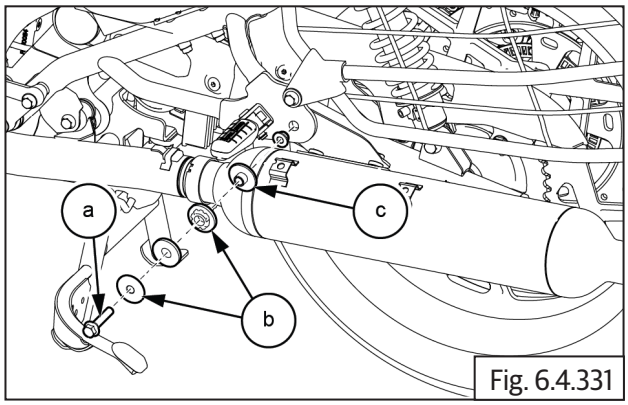

Fig. 6.4.331

	12 mm socket with ratchet
Torque	25 N-m / 2.5 kgf-m

- Locate the front silencer guard **(a)** with bolts on the header pipe ensure holes aligned.

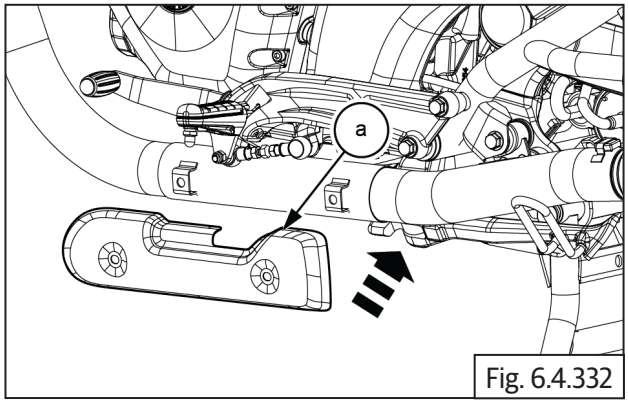

Fig. 6.4.332

- Tighten 2 nos hex socket bolts **(M6) (a)** on front silencer guard at the header pipe end.

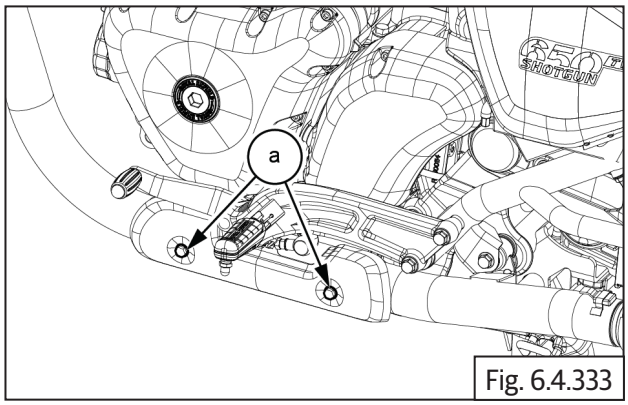

Fig. 6.4.333

	10 mm socket with ratchet
Torque	10 N-m / 1.0 kgf-m

- Slightly slide and fix rear silencer guard **(a)** with bolts on exhaust muffler.

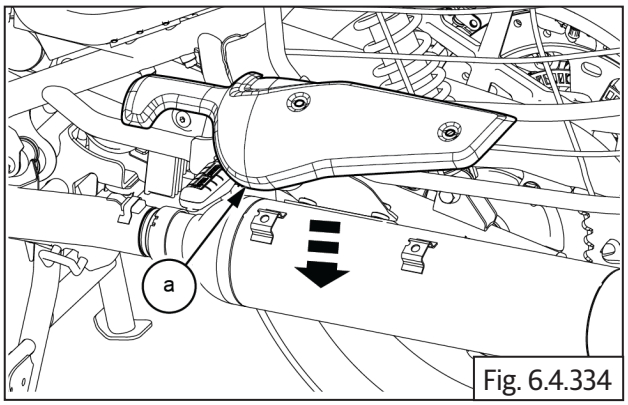

Fig. 6.4.334

- Tighten 2 nos hex socket bolts **(M6) (a)** on rear silencer guard at muffler end.

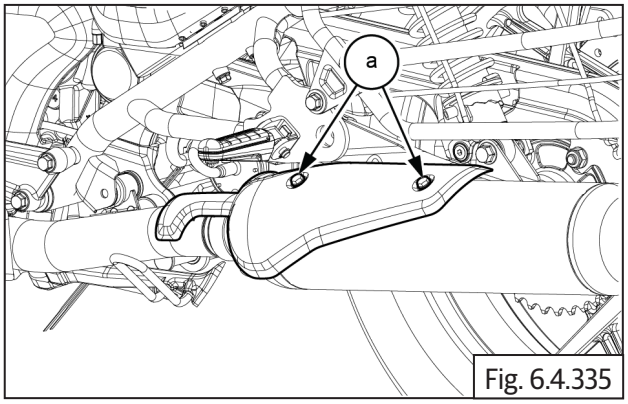

Fig. 6.4.335

	10 mm socket with ratchet
Torque	10 N-m / 1.0 kgf-m

6.4.8. Hego/Oxygen Sensor Connectors

- Connect Hego / oxygen sensor coupler **(a)** on both LH and RH on the front side top of engine.

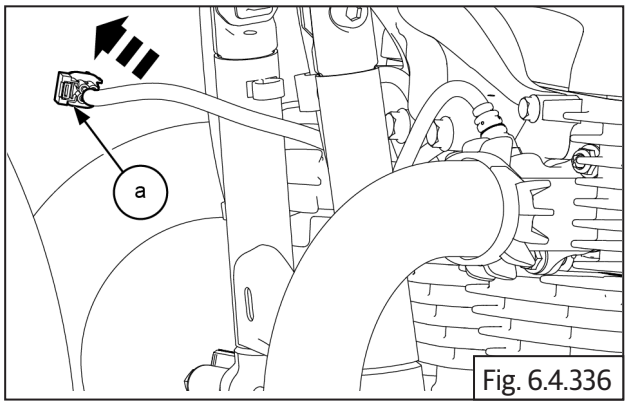

Fig. 6.4.336

- Repeat the entire assembly procedure to RHS silencer **(a)**.

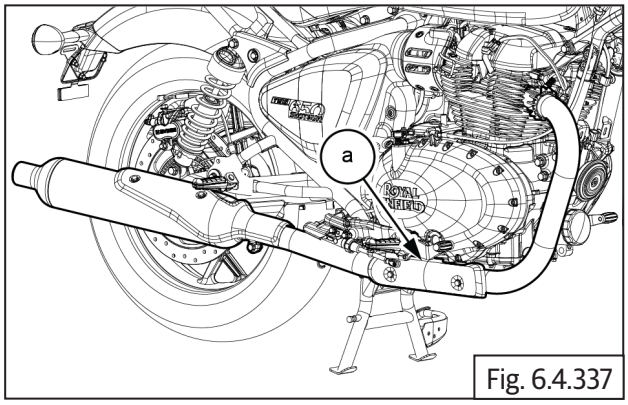

Fig. 6.4.337

Troubleshooting

Symptom	Possible Cause	Diagnosis	How to Fix	Recommended Specification
Vibration/rattling noise from exhaust pipe/s.	Exhaust pipe mounting to cylinder head LH/RH is loose.	Exhaust pipe/s flange mounting to cylinder head is loose/flange is cracked.	Check and tighten flange mounting to torque. Replace exhaust pipe if flange is cracked.	Torque: 25 N-m/2.5 kgf-m
	Exhaust pipe mounting to frame LH/RH is loose.	Fasteners are loose/ mounting clamps are cracked.	Check and tighten fasteners to torque. Replace clamps if they are cracked.	Torque: 25 N-m/2.5 kgf-m
Vibration/rattling noise from silencer/s.	Silencer mounting to frame LH/RH is loose.	Fasteners are loose/mounting clamps are cracked.	Check and tighten fasteners to torque Replace clamps/ silencer if they are cracked.	Torque: 25 N-m/2.5 kgf-m
	Internal baffles in silencer are broken.	Remove silencer and shake to check if internal baffles are cracked.	Replace silencer assembly.	
Exhaust leak from cylinder head joint/ silencer joint.	Gaskets are burnt/ missing.	Gaskets are burnt-out due to loose clamping of exhaust pipe/ silencer.	Replace exhaust pipe/silencer gaskets.	

NOTE

- *The troubleshooting given in this section is only related to issues with noise/leak in the exhaust system. For complaints related to poor pickup, misfiring, etc., please refer to engine section.*

FOOTREST/STAND

CONTENTS **PAGE**

6.5 Foortrest / Stand 402

Dismantling 402

6.5.1. Rider Footrest 402

6.5.2. Pillion Footrest 402

6.5.3. Control Plate (LHS) 403

6.5.4. Control Plate (RHS) 404

6.5.6. Side Stand 406

6.5.7. Center Stand 408

Inspection 409

Assembly 409

6.5.8. Center Stand 409

6.5.9. Side Stand 411

6.5.11. Control Plate (RHS) 413

6.5.12. Control Plate (LHS) 414

6.5.13. Pillion Footrest 415

6.5.14. Rider Footrest 416

6.5. Footrests/ Contol bracket/ Stands

Dismantling

⚠ CAUTION
Ensure the motorcycle is upright on a firm and flat surface.

6.5.1. Rider Footrest

- Locate a scissor jack under the cradle frame and lift motorcycle such that the front wheel is off the ground by minimum 6 inches (or 15 cm).

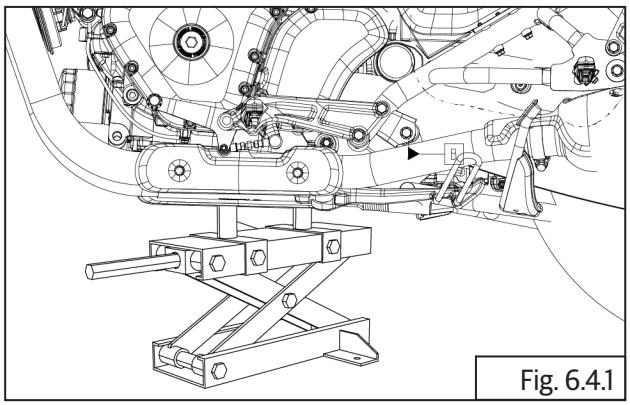

Fig. 6.4.1

- Remove the circlip **(a)** at the bottom of the LH footrest.

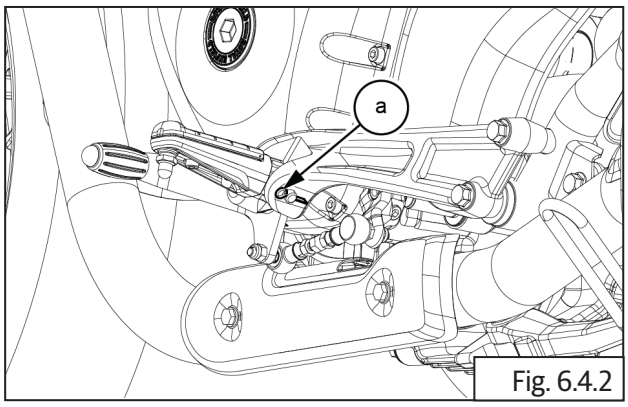

Fig. 6.4.2

	Circlip Expander

- Pull the pin **(a)** on the upward direction to remove the footrest **(c)** along with spring **(b)**.

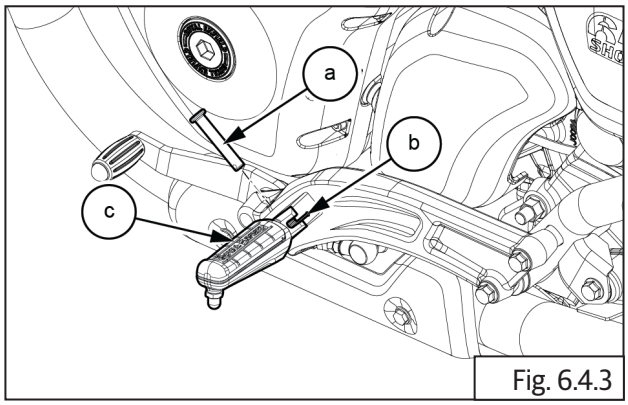

Fig. 6.4.3

- Repeat the same rider footrest removal procedure to RHS footrest **(a)**.

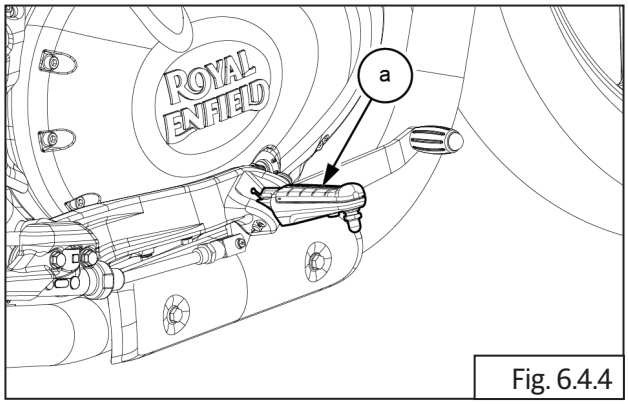

Fig. 6.4.4

6.5.2. Pillion Footrest

- Remove circlip **(a)** from the bottom of the LH footrest.

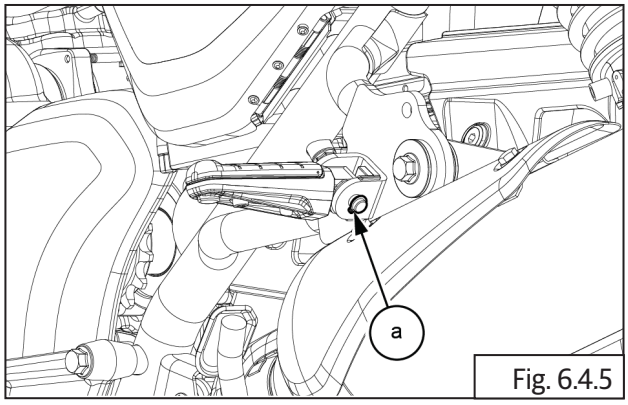

Fig. 6.4.5

	Circlip expander

- Gently pull out pin **(a)** from the top supporting the LH footrest.

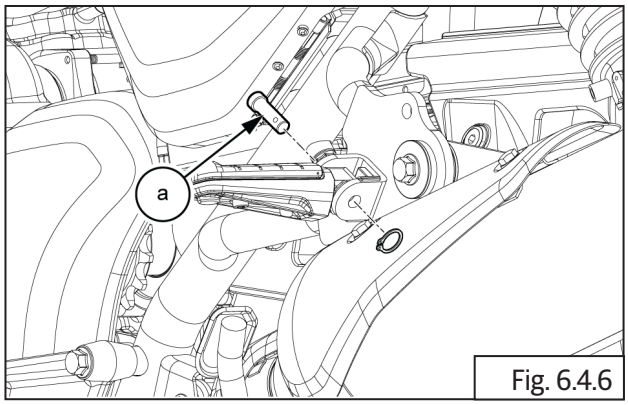

Fig. 6.4.6

- Remove LH footrest **(a)** from mounting bracket carefully along with ball **(b)** and spring **(c)**.

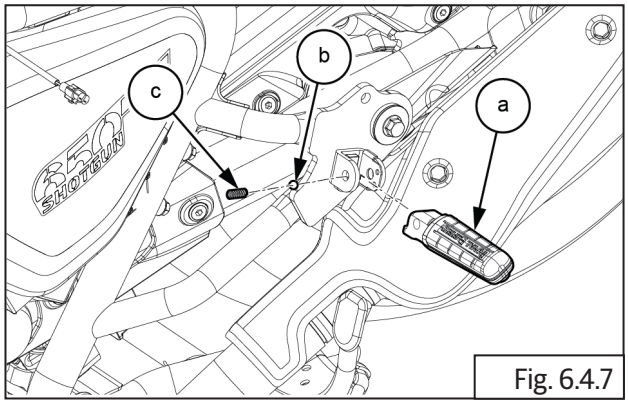

Fig. 6.4.7

- Loosen and remove hex nut **(a) (M10)** from inner side of the LH frame and remove bracket **(b)** and bolt **(c)**.

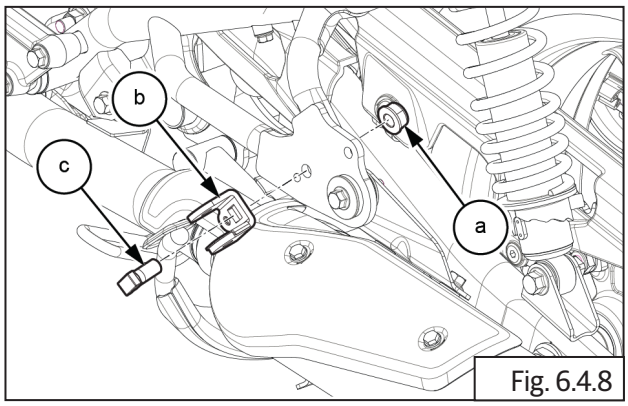

Fig. 6.4.8

	14 mm Socket with Ratchet

- Repeat the same pillion footrest removal procedure to RHS footrest **(a)**.

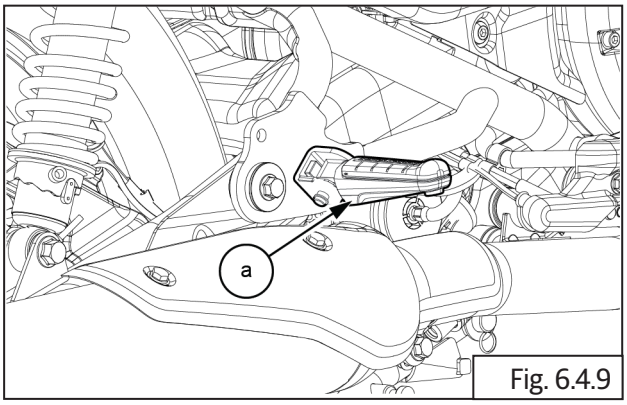

Fig. 6.4.9

6.5.3. Control Plate (LHS)

- Loosen and remove 2 Nos hex nut **(a) (M6)** from gear shift linkage.

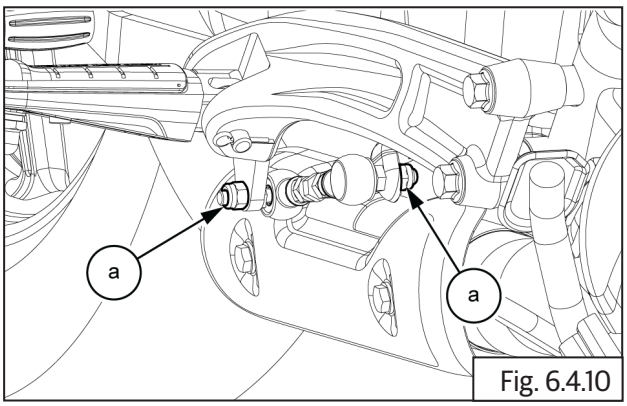

Fig. 6.4.10

	10 mm Socket with Ratchet

- Remove gear shift linkage **(a)** from LH control plate.

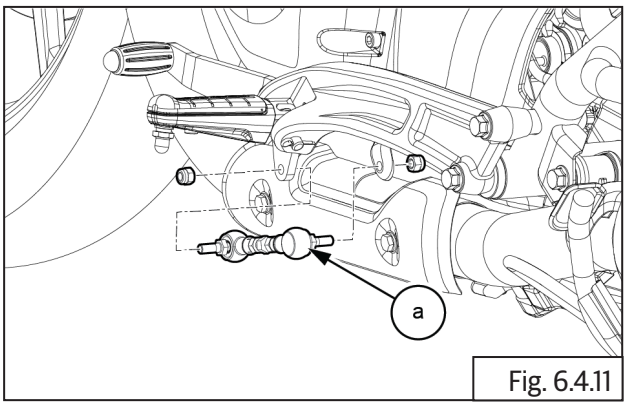

Fig. 6.4.11

- Loosen and remove 2 Nos hex bolts **(a) (M10)** from LH control plate **(b)**.

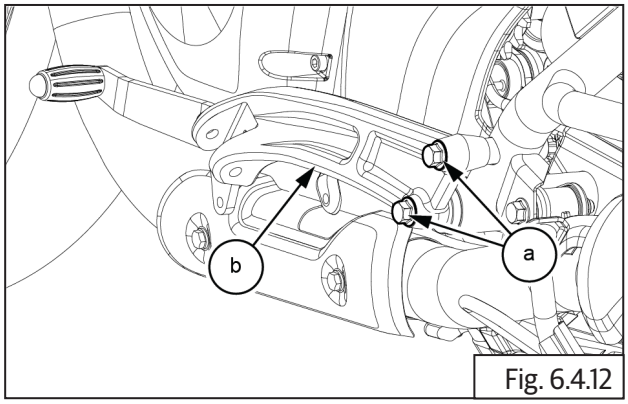

Fig. 6.4.12

	14 mm Socket with Ratchet

- Remove LH control plate **(a)** from frame.

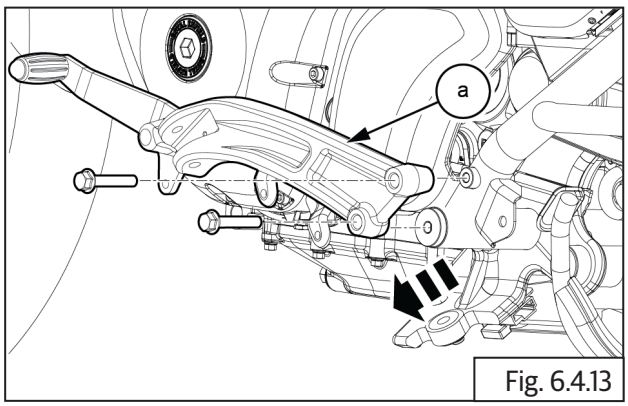

Fig. 6.4.13

- Loosen and remove allen head bolt **(a) (M8)** from gear shift pedal.

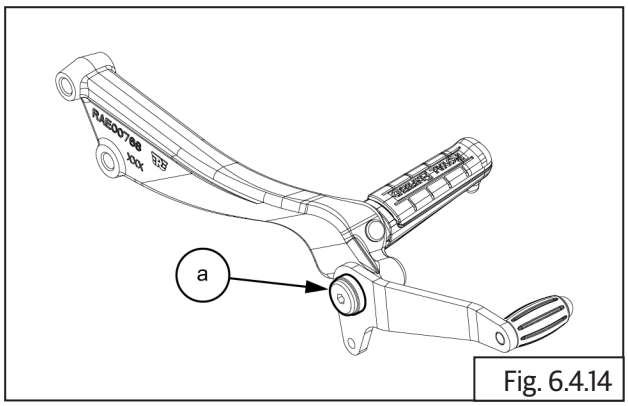

Fig. 6.4.14

	6 mm Allen Socket with Ratchet

- Remove gear shift pedal **(a)** along with bush **(b)** from LH control plate.

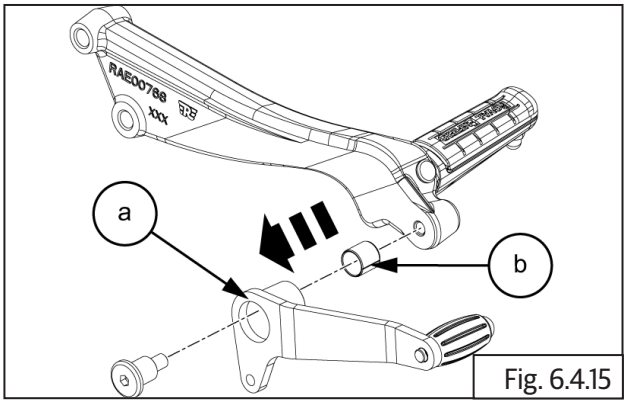

Fig. 6.4.15

6.5.4. Control Plate (RHS)

- Remove pivot lock **(a)** from rear master cylinder.

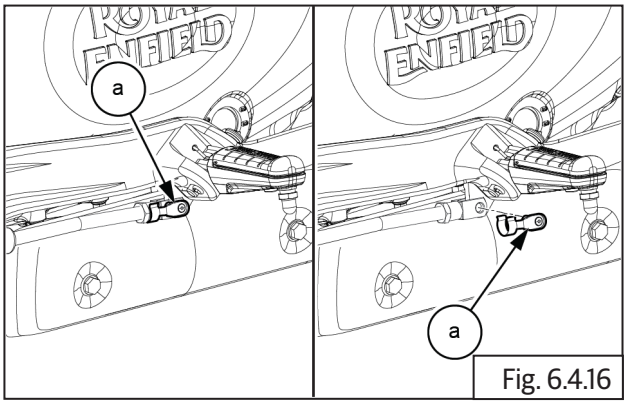

Fig. 6.4.16

	Plier

- Remove hex bolt **(a) (M6)** from master cylinder reservoir.

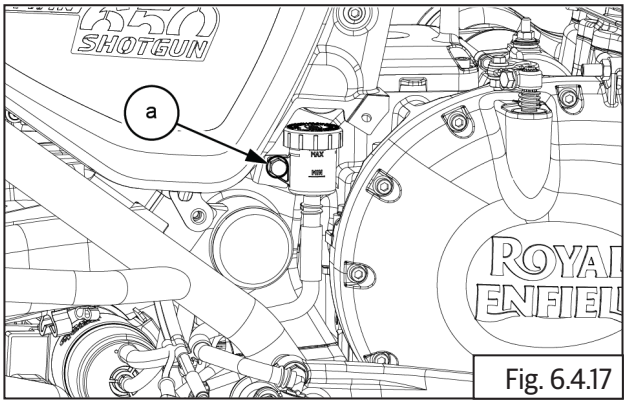

Fig. 6.4.17

	10 mm Socket with Ratchet

- Remove 2 Nos hex bolts **(a) (M6)** from RH rear brake master cylinder.

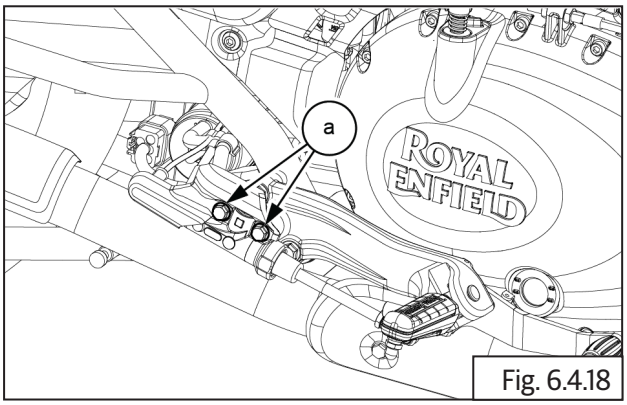

Fig. 6.4.18

	10 mm Socket with Ratchet

- Remove the master cylinder guard **(a)** from RH rear brake master cylinder.

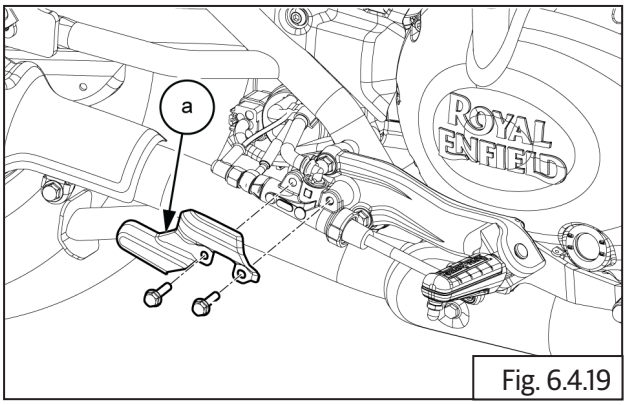

Fig. 6.4.19

- Remove the master cylinder **(a)** from control plate RHS.

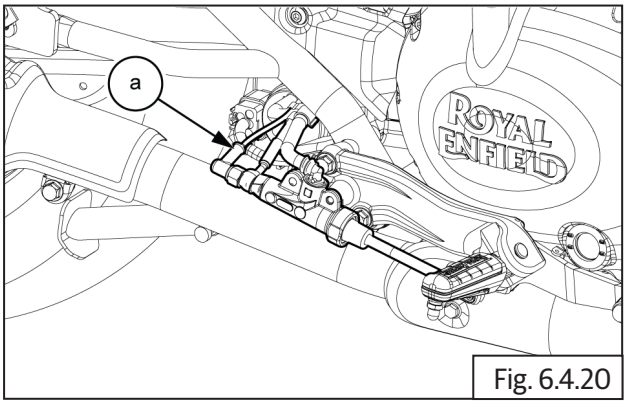

Fig. 6.4.20

- Loosen and remove 2 Nos hex bolts **(a) (M8)** from RH control plate.

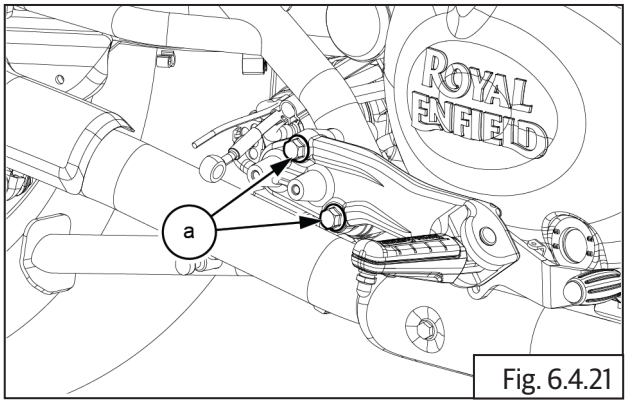

Fig. 6.4.21

	12 mm Socket with Ratchet

- Remove RH control plate **(a)** from frame.

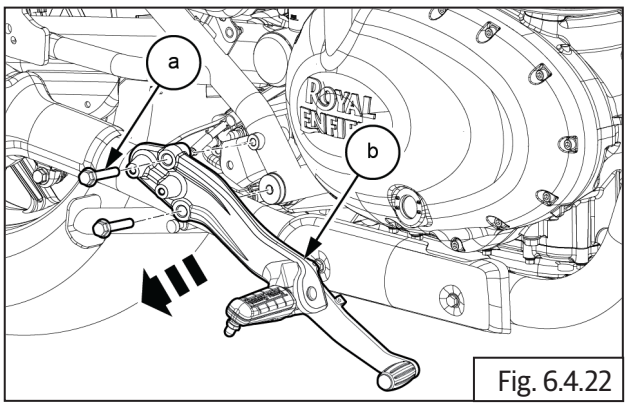

Fig. 6.4.22

- Remove allen head bolt **(a) (M8)** from brake pedal.

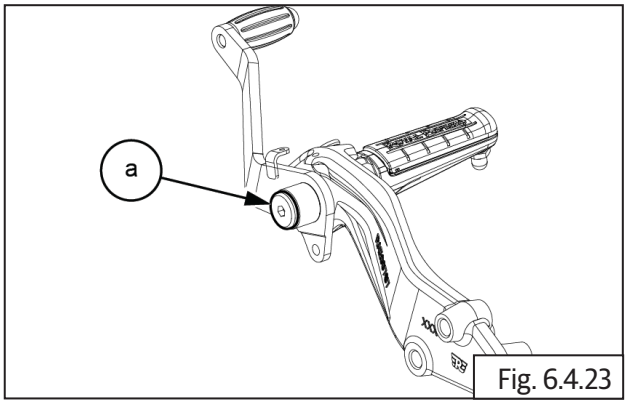

Fig. 6.4.23

	6 mm Allen Socket with Ratchet

- Remove brake pedal **(a)** along with bush **(c)** and spring **(b)** from RH control plate.

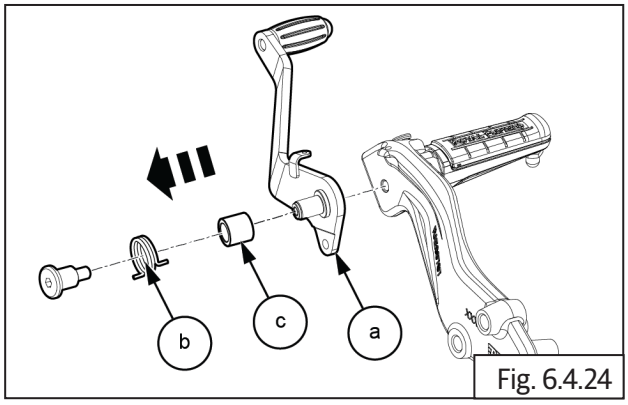

Fig. 6.4.24

6.5.6. Side Stand

⚠ CAUTION

Ensure the motorcycle is upright on a firm and flat surface.

⚠ CAUTION

Be extremely careful when removing and installing the springs as the combined tension of the springs is very strong.

• Keep the motorcycle on its side stand when removal and installing the center stand.

• The spring removal and installation shall be performed by two people. While one person holds the motorcycle, another person installs the spring.

- Locate a scissor jack under the cradle frame and lift motorcycle such that the front wheel is off the ground by minimum 6 inches (or 15 cm).

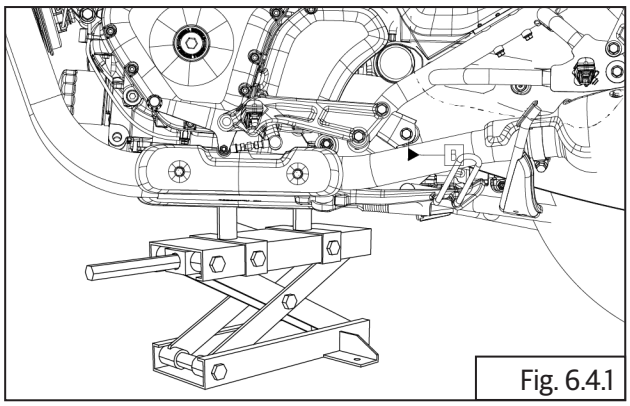
Fig. 6.4.1

- Disconnect side stand switch coupler **(a).**

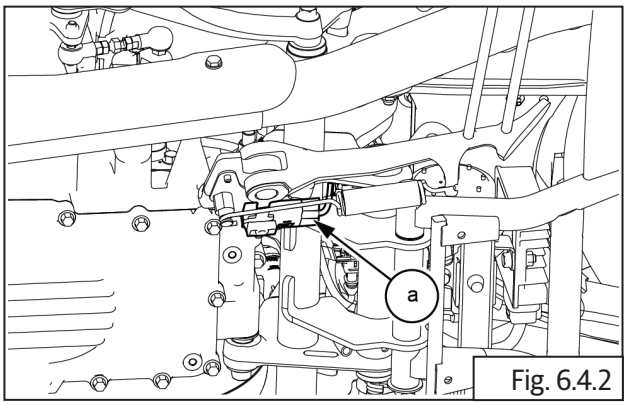

Fig. 6.4.2

- Remove spring **(a)** from the side stand.

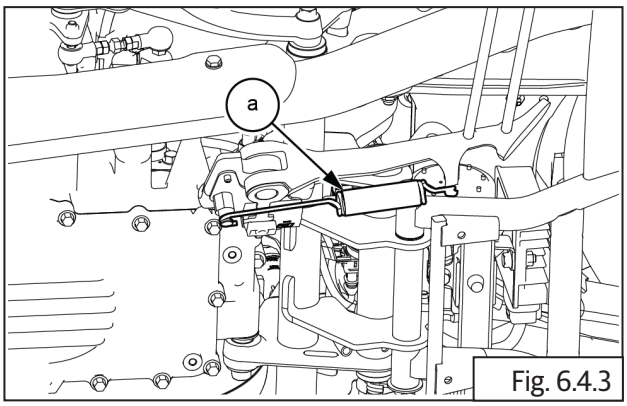

Fig. 6.4.3

	Screw driver

- Remove split pin **(a)** along with washer **(b)** from clevis pin.

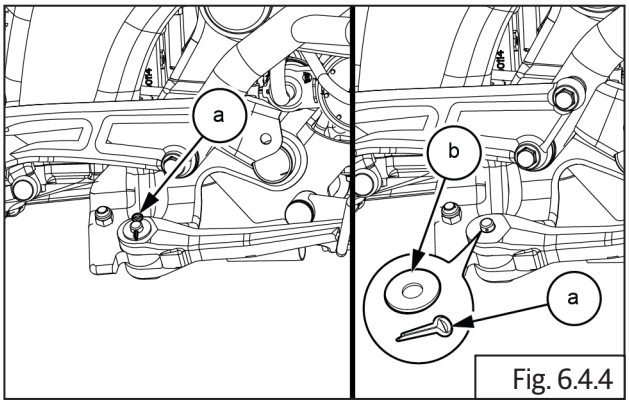

Fig. 6.4.4

	Nose plier

- Remove clevis pin **(a)** from side stand.

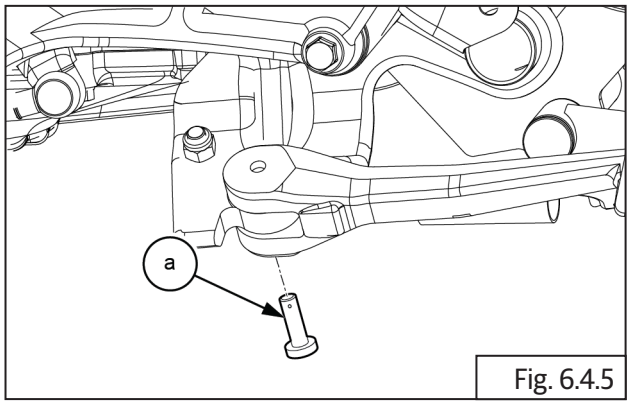

Fig. 6.4.5

- Remove side stand **(a)** from frame **(b)**.

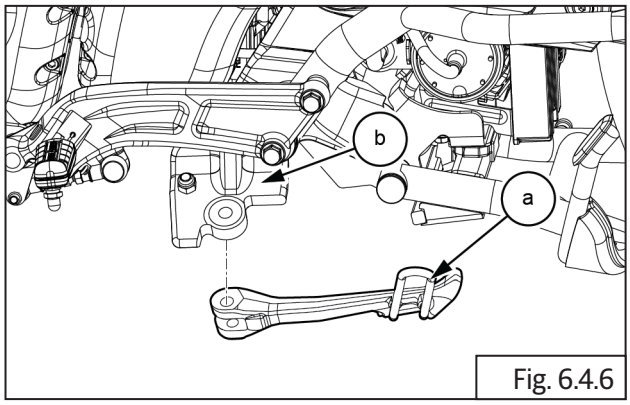

Fig. 6.4.6

- Loosen and remove 1 Nos. hex nut **(M8) (a)** from spring pin.
- Remove spring pin **(c)** and side stand switch **(b)** from frame .

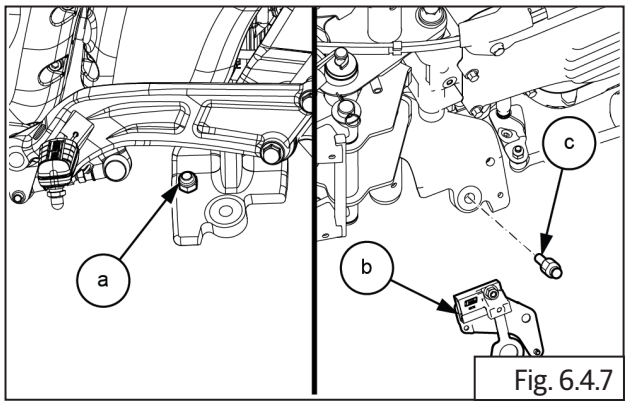

Fig. 6.4.7

	12 mm socket with Ratchet

- Loosen and remove 1 Nos. hex nut **(M6) (a)** from side stand switch plate.
- Remove the side stand switch **(b)** from plate **(c)**.

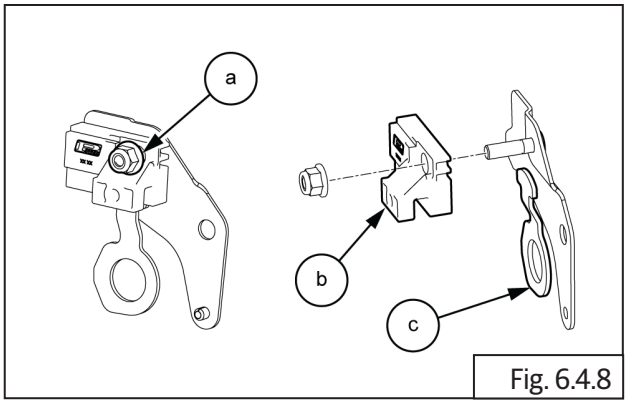

Fig. 6.4.8

	12 mm socket with Ratchet

6.5.7. Center Stand

⚠ CAUTION

Ensure the motorcycle is upright on a firm and flat surface.

⚠ CAUTION

Be extremely careful when removing and installing the springs as the combined tension of the springs is very strong.

• Keep the motorcycle on its side stand when removal and installing the center stand.

• The spring removal and installation shall be performed by two people. While one person holds the motorcycle, another person installs the spring.

- Locate a scissor jack under cradle frame and lift motorcycle such that the wheel is off the ground.

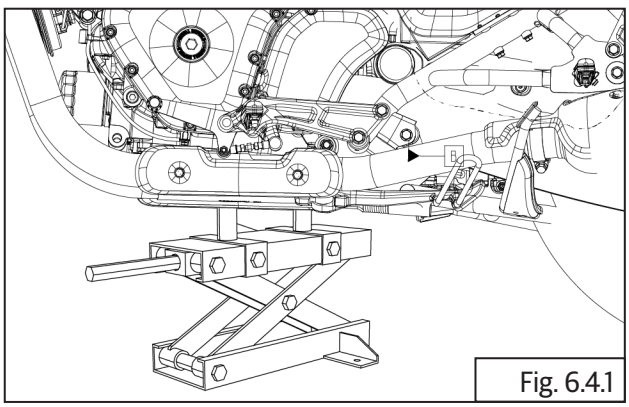
Fig. 6.4.1

- Remove spring **(a)** from center stand.

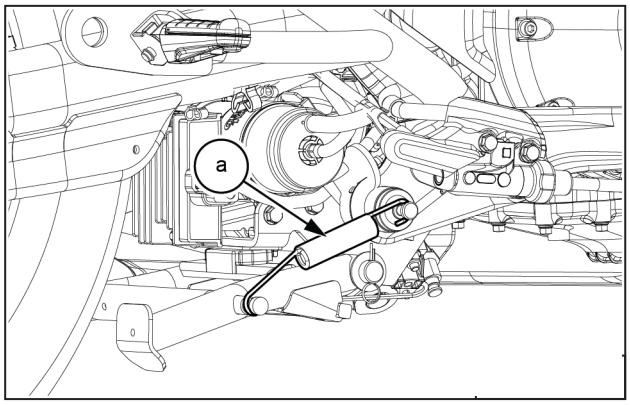

	Phillips screwdriver

- Straighten and remove split pin **(a)** from spindle pin located on center stand .
- Remove washer **(b)** from spindle pin .

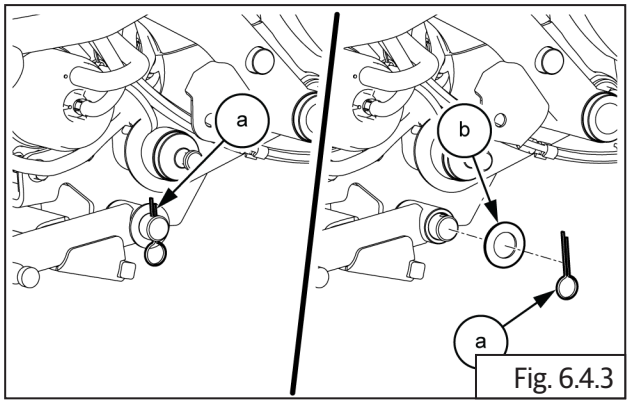

Fig. 6.4.3

	Nose plier

- Gently tap from RH to remove spindle pin **(a)** from center stand.
- Remove spindle pin **(a)** from LH side to separate center stand from frame

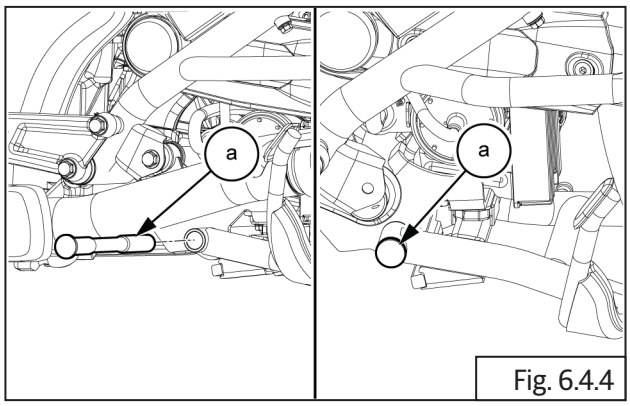

Fig. 6.4.4

	Mallet

- Remove center stand **(a)** from frame .

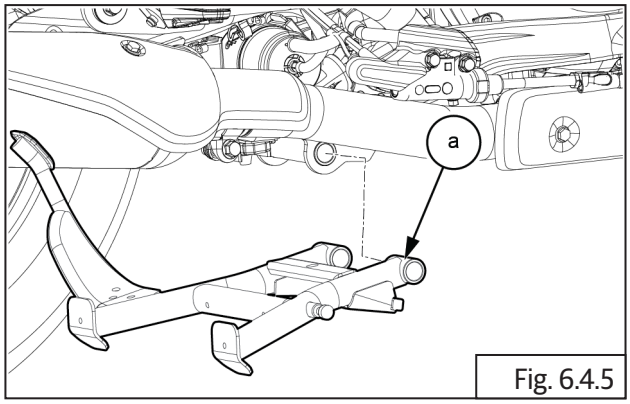

Fig. 6.4.5

- Remove rubber stopper **(a)** from center stand .

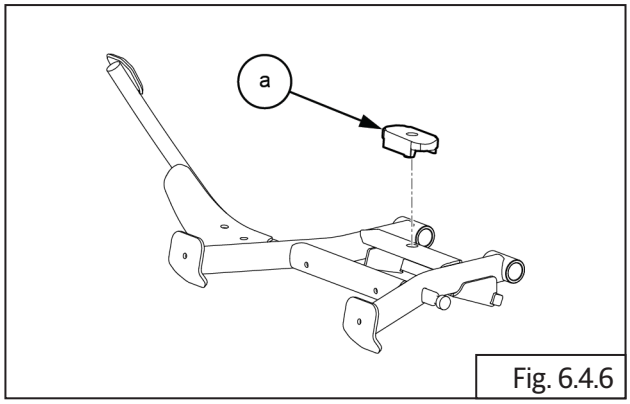

Fig. 6.4.6

Inspection

- Inspect footrests for any wear out, cracks, damages at the mounting area.
- Inspect clevis pin for any wear-out.
- Inspect springs for loss of tension and breakage.
- Inspect ball (only for pillion footrest) for uneven wear.
- Inspect rider footrest housing on frame for any cracks and damages.
- Inspect pillion footrest brackets for any cracks and damages.
- Inspect the center stand for rust formation, any bend or damage.
- Inspect side stand for any wear out, cracks, damages at the mounting area.
- Inspect rubber bush for any cracks, cut or tear and wear.

Assembly

6.5.8. Center Stand

NOTE
• *Clean the clevis pin and ensure they are free of any dirt, grime,rust, etc and then lubricate the clevis pin.*

⚠ CAUTION
Ensure motorcycle is supported appropriately.

⚠ CAUTION
Be extremely careful when removing and installing the springs as the combined tension of the springs is very strong. **• Keep the motorcycle on its side stand when removal and installing the center stand.** **• The spring removal and installation shall be performed by two people. While one person holds the motorcycle, another person installs the spring.**

- Fix rubber stopper **(a)** into center stand .

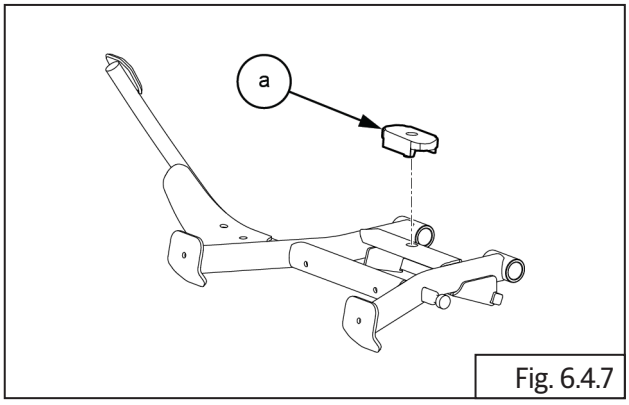

Fig. 6.4.7

- Apply **2g** of grease evenly on the inside faces of the center stand **(a).**
- Locate and center stand **(a)** into frame .

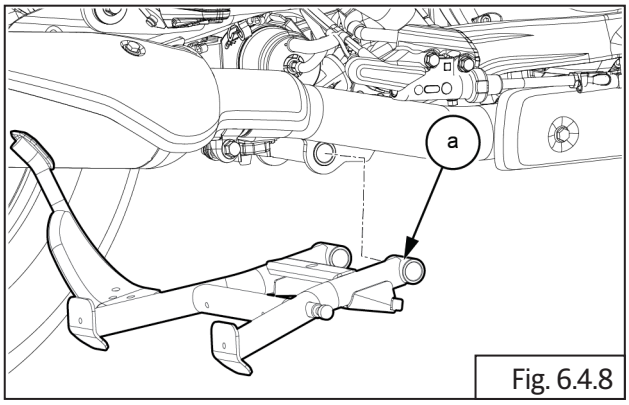

Fig. 6.4.8

	NLGI 2 / Mobil XHP 222

- Apply **1g** of grease on each end of the spindle **(a).**
- Locate the spindle **(a)** into the stand on LHS.

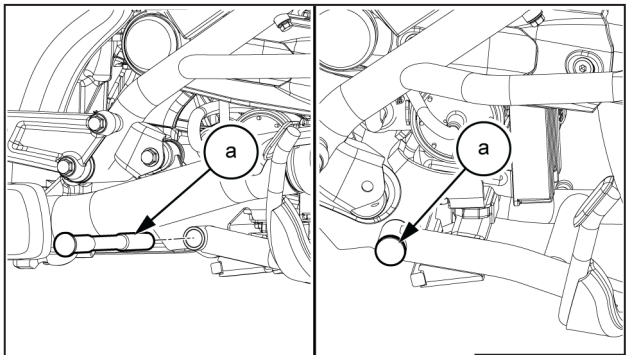

Fig. 6.4.9

	NLGI 2 / Mobil XHP 222
	Mallet

- Locate washer **(b)** into spindle pin .
- Insert the split pin **(a)** into the spindle

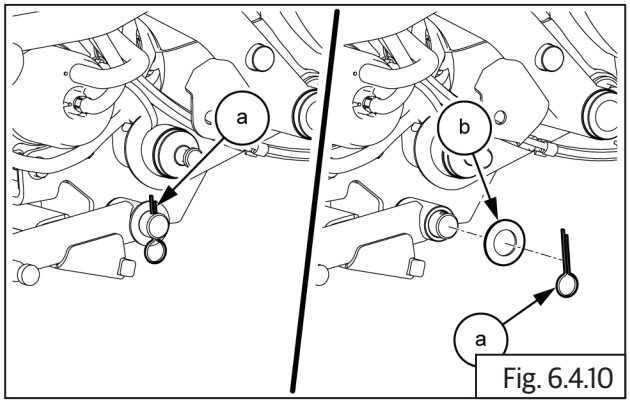

Fig. 6.4.10

	Nose plier

- Locate spring **(a)** into the center stand .

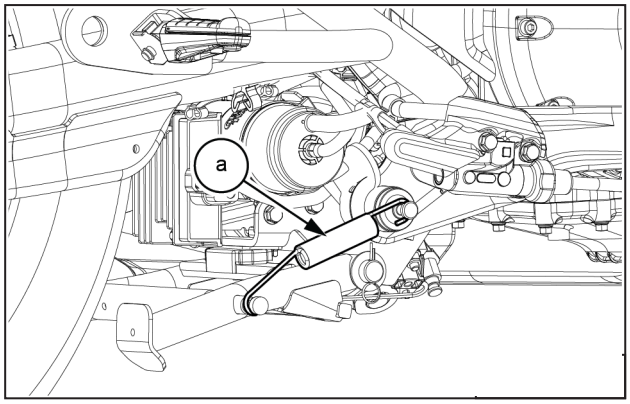

	Phillips screwdriver

NOTE
• *Split pin must be fitted on RHS of motorcycle.*
• *Spindle pin must be orientated as per below image.*

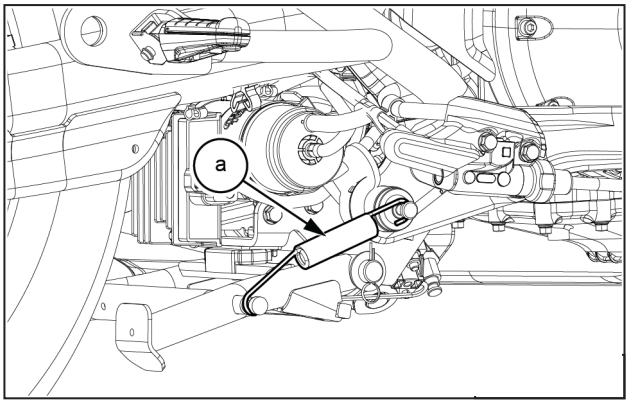

6.5.9. Side Stand

- Locate side stand switch **(b)** into the plate **(c)**.
- Locate and tighten 1 Nos. hex nut **(M6) (a)** into side stand switch plate.

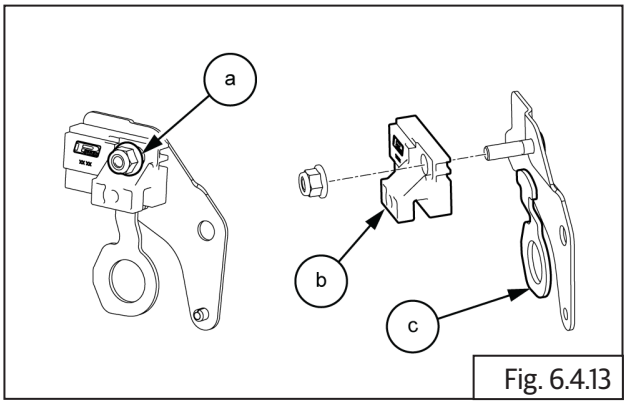

Fig. 6.4.13

	10 mm Socket with Ratchet
Torque	10 N-m / 1.0 kgf-m

- Locate spring pin **(c)** and side stand switch **(b)** into the frame.
- Locate and tighten 1 Nos. hex nut **(M8) (a)** on spring pin.

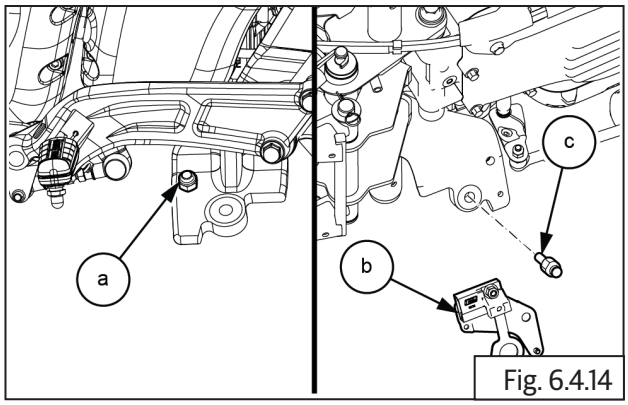

Fig. 6.4.14

	12 mm Socket with Ratchet
Torque	25 N-m/2.5 kgf-m

- Apply **2g** of grease evenly on both sides of the slot on the side stand **(a)**.
- Locate the stand **(a)** into the frame **(b)**.

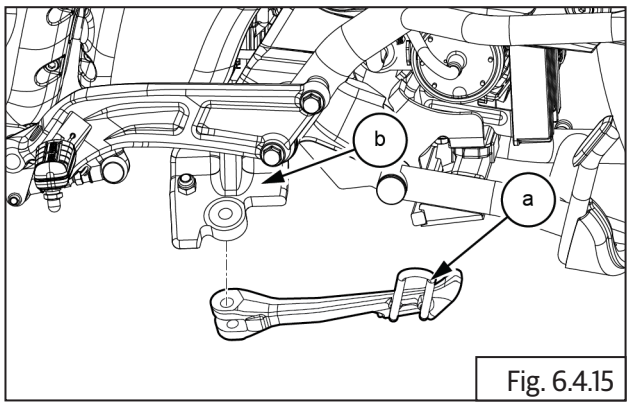

Fig. 6.4.15

	NLGI 2 / Mobil XHP 222

- Apply **1g** of grease on the pin **(a)**.
- Locate clevis pin **(a)** into side stand.

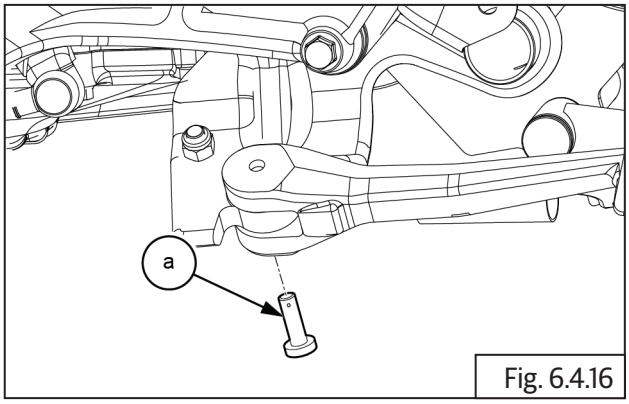

Fig. 6.4.16

	NLGI 2 / Mobil XHP 222

- Locate washer **(b)** into clevis pin .
- Insert the split pin **(a)** into the clevis pin.

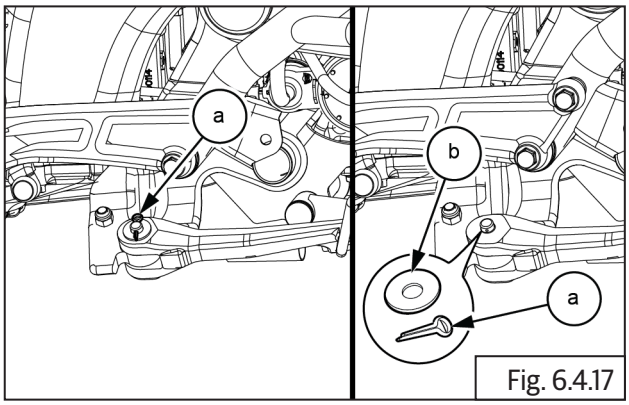

Fig. 6.4.17

	Nose plier

- Locate spring **(a)** into the side stand .

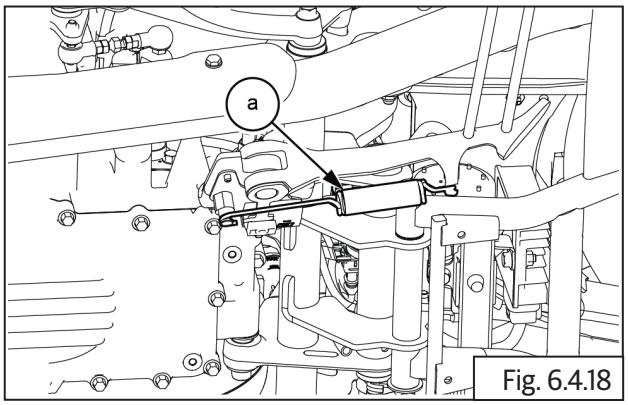

Fig. 6.4.18

	Screw driver

NOTE
• *Spring must be orientated as per below image.*

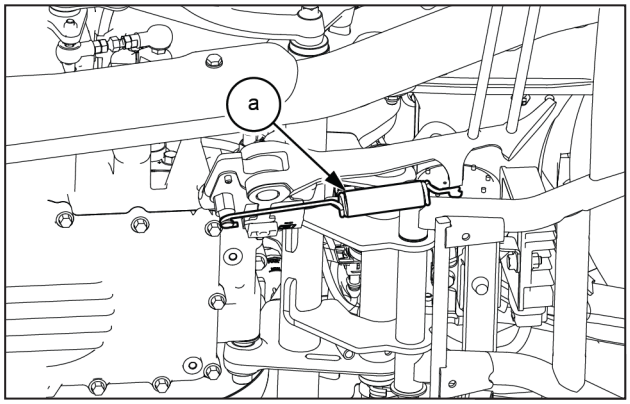

- Connect side stand switch coupler **(a).**

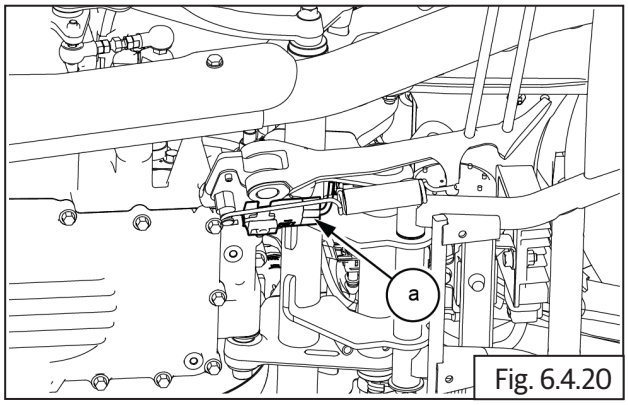

Fig. 6.4.20

6.5.11. Control Plate (RHS)

- Apply **0.3g** of grease on bush inner and outer surface.
- Install the brake pedal **(a)** along with bush **(c)** and spring **(b)** into RH control plate.

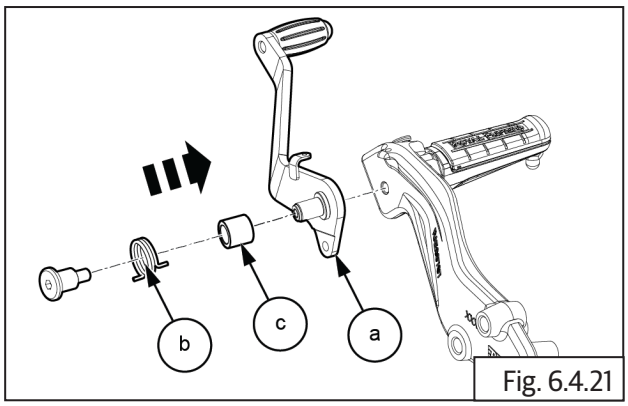

Fig. 6.4.21

	NLGI 2 / Mobil XHP 222

- Locate and tighten allen head bolt **(a) (M8)** into brake pedal.

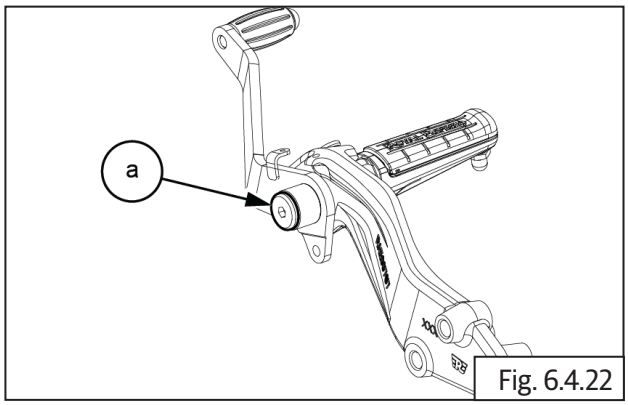

Fig. 6.4.22

	6 mm Allen socket with Ratchet
Torque	22 N-m / 2.2 kgf-m

- Locate and align the bolt hole **(a)** of RH control plate **(b)** into the frame.

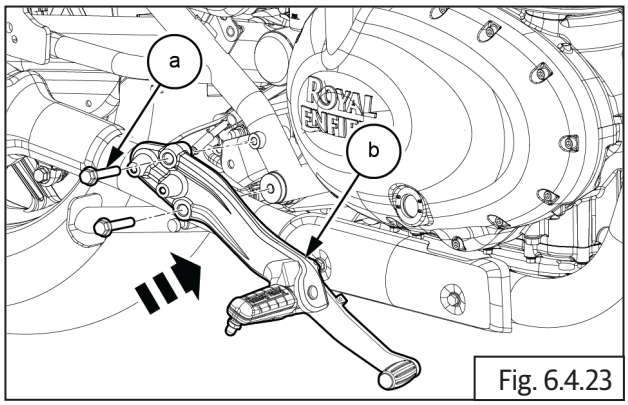

Fig. 6.4.23

- Locate and tighten 2 Nos hex bolts **(a) (M8)** into RH control plate.

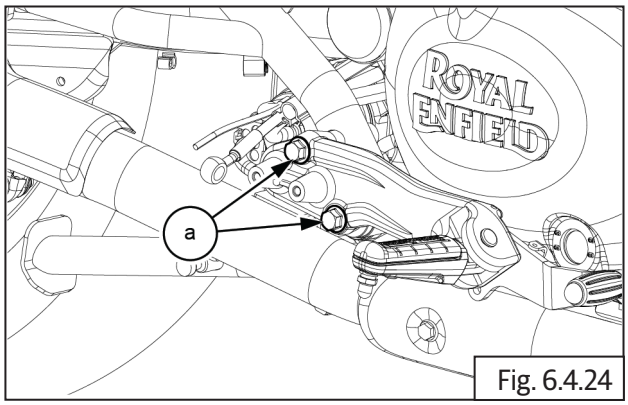

Fig. 6.4.24

	12 mm Socket with Ratchet
Torque	30 N-m / 3.0 kgf-m

- Locate and tighten 2 Nos hex bolts **(a) (M6)** into the master cylinder with guard **(b)**.

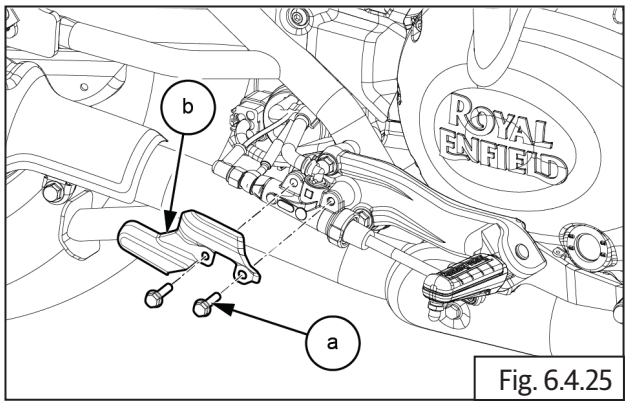

Fig. 6.4.25

	10 mm Socket with Ratchet
Torque	12 N-m / 1.2 kgf-m

- Locate and tighten hex bolt **(a) (M6)** into the master cylinder reservoir.

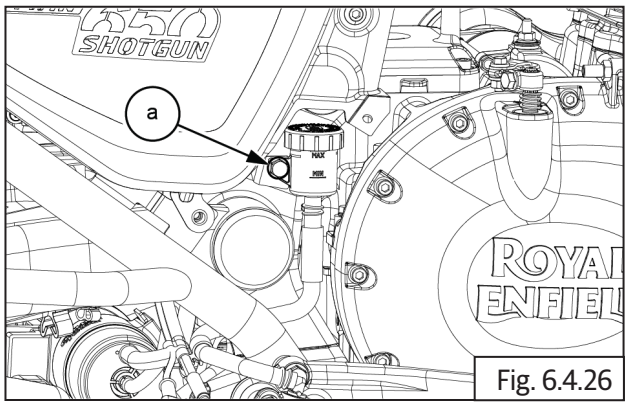

Fig. 6.4.26

	10 mm Socket with Ratchet
Torque	3 N-m / 3.0 kgf-m

- Install the pivot lock **(a)** into rear master cylinder.

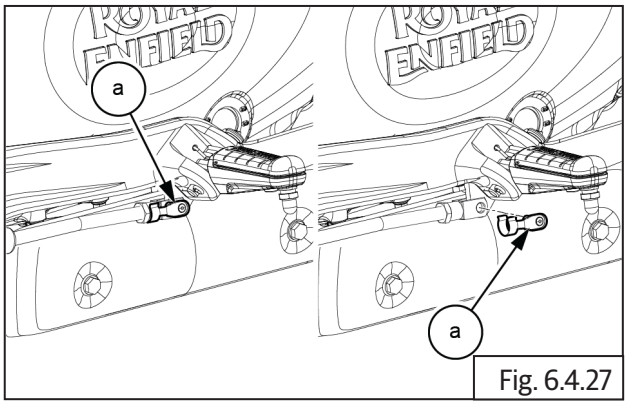

Fig. 6.4.27

	Plier

6.5.12. Control Plate (LHS)

- Apply **0.3g** of grease on bush inner and outer surface.
- Install the gear shift pedal **(a)** along with bush **(b)** into the LH control plate.

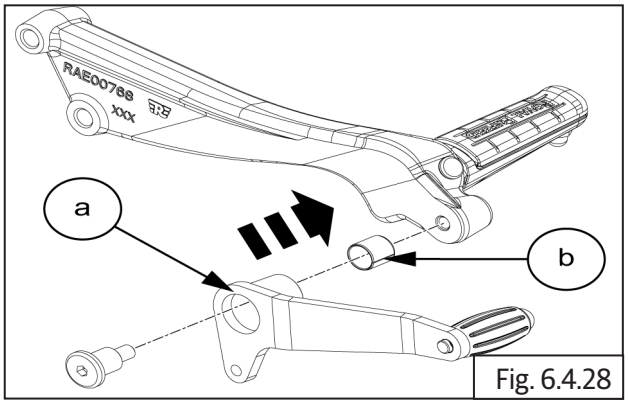

Fig. 6.4.28

	NLGI 2 / Mobil XHP 222

- Locate and tighten allen head bolt **(a) (M8)** into gear shift pedal.

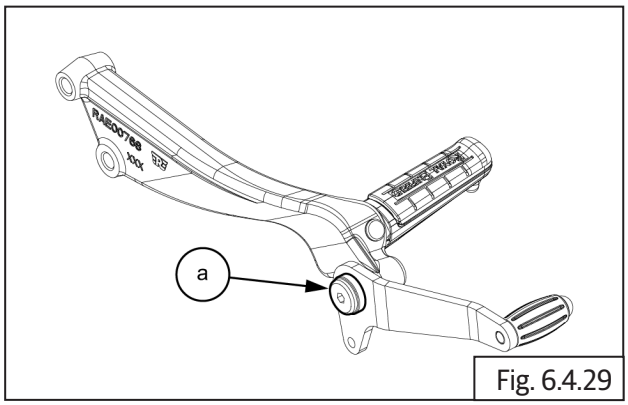

Fig. 6.4.29

	6 mm Allen Socket with Ratchet
Torque	22 N-m / 2.2 kgf-m

- Locate and align the hole of LH control plate **(a)** into the frame.

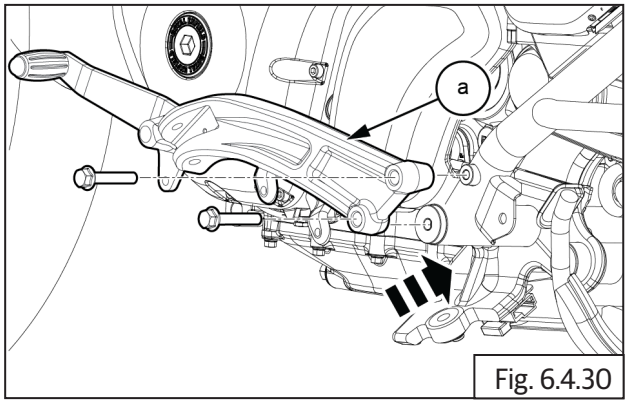

Fig. 6.4.30

- Locate and tighten 2 Nos hex bolts **(a) (M10)** into LH control plate **(b)**.

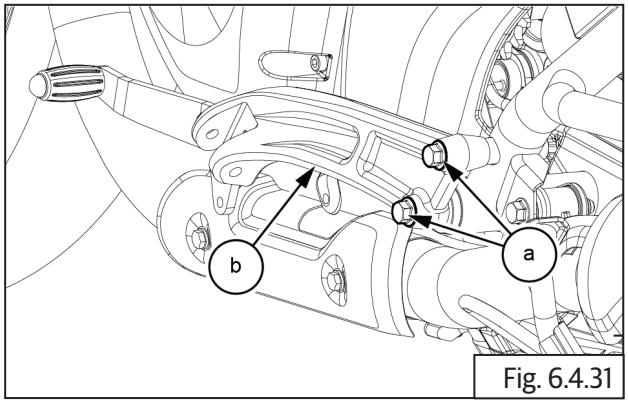

Fig. 6.4.31

	14 mm Socket with Ratchet
Torque	30 N-m / 3.0 kgf-m

- Locate gear shift linkage **(a)** into LH control plate and knuckle.

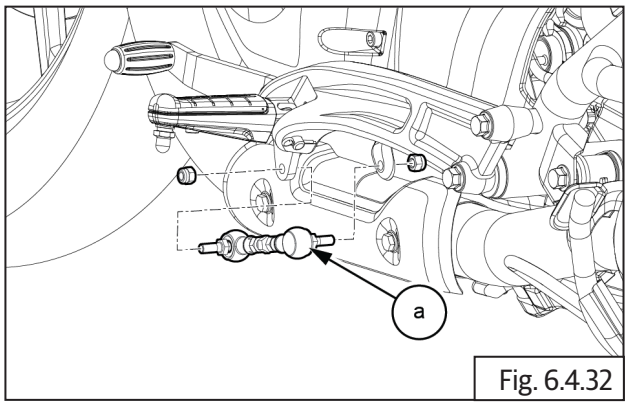

Fig. 6.4.32

- Locate and tighten 2 Nos hex nut **(a) (M6)** into gear shift linkage.

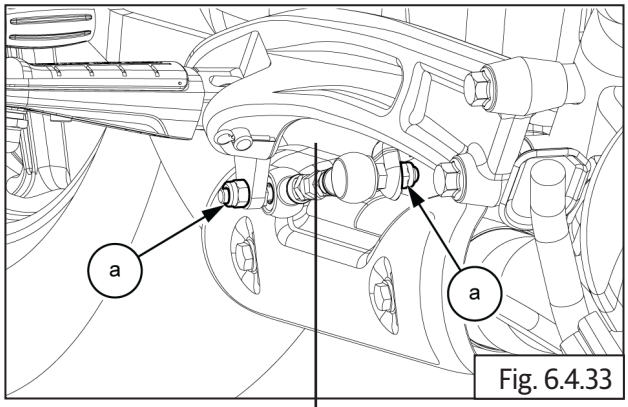

Fig. 6.4.33

	10 mm Socket with Ratchet
Torque	10 N-m / 1.0 kgf-m

6.5.13. Pillion Footrest

- Position bracket **(b)** against the frame such that the bolt **(c)** in the bracket is located into the hole in frame.
- Assemble the nut **(a) (M10)** on the inner side of the frame.

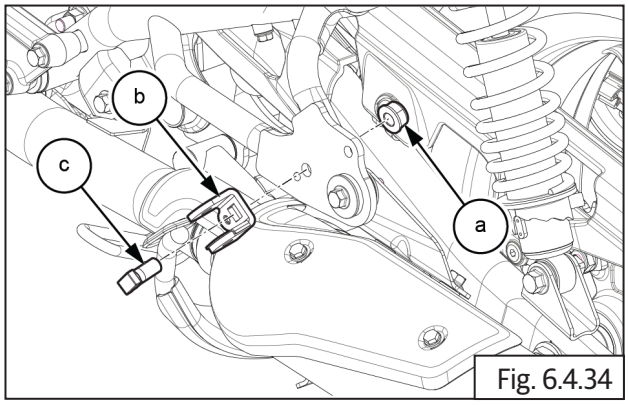

Fig. 6.4.34

	14 mm Socket with Ratchet
Torque	25 N-m/2.5 kgf-m

- Install spring **(c)** in the grove provided in the footrest **(a)**.
- Apply grease on the ball **(b)** slightly and locate it on the hole in the footrest **(a)**.
- Locate the footrest **(a)** carefully on the mounting bracket without disturbing the ball **(b)**.

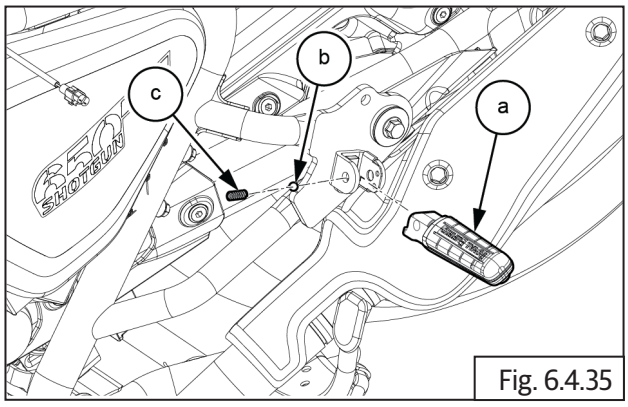

Fig. 6.4.35

- Insert the pin **(a)** into LH footrest.

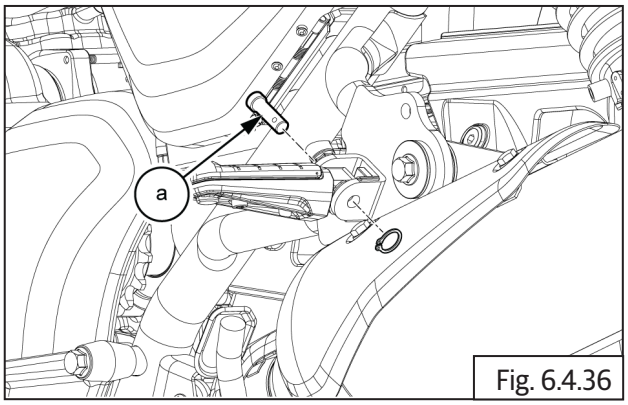

Fig. 6.4.36

- Fix the circlip **(a)** on bottom of the LH footrest.

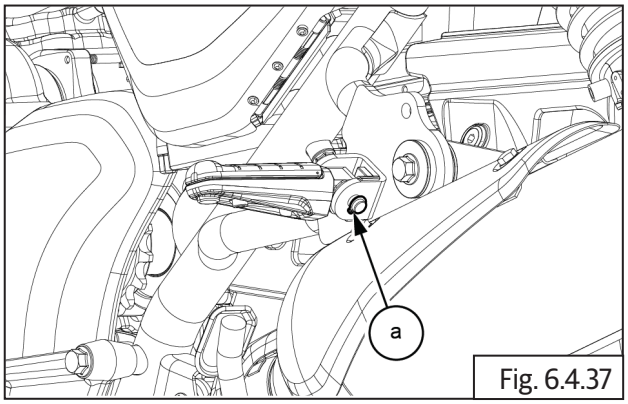

Fig. 6.4.37

	Circlip expander

- Repeat the same pillion footrest install procedure to RHS footrest **(a)**.

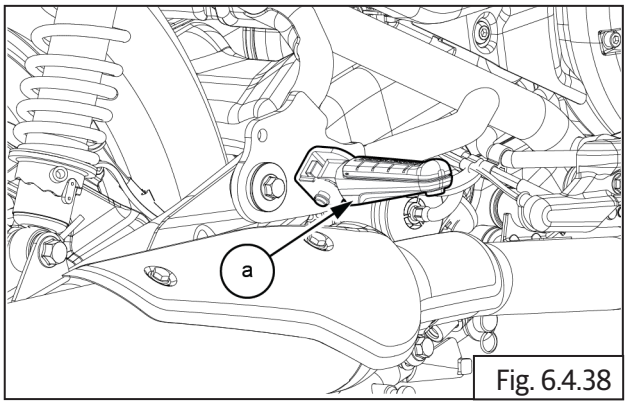

Fig. 6.4.38

6.5.14. Rider Footrest

- Locate the spring **(b)** between the footrest **(c)** .
- Insert the pin **(a)** into the footrest **(c)**

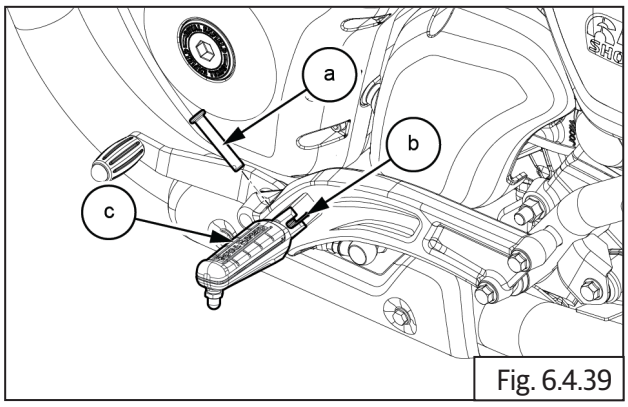

Fig. 6.4.39

- Install the circlip **(a)** at the bottom of the LH footrest.

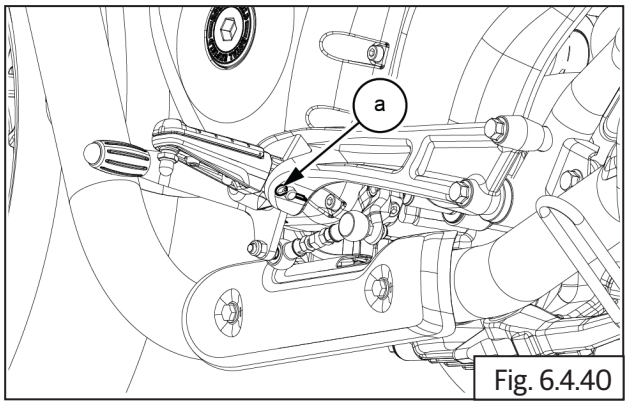

Fig. 6.4.40

	Circlip expander

- Repeat the same rider footrest install procedure to RHS footrest **(a)**.

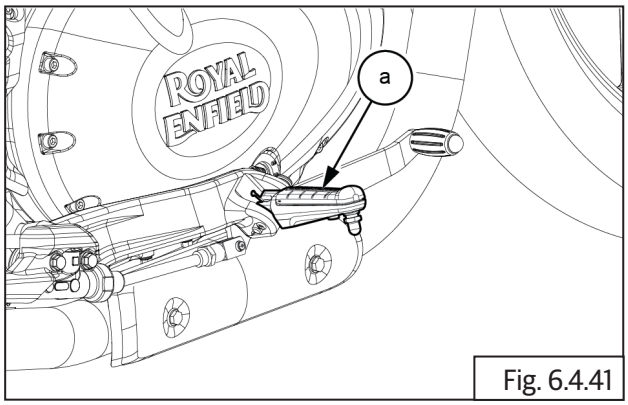

Fig. 6.4.41

MUDGUARDS/
NUMBER PLATES

CONTENTS PAGE

6.6 . Mudguards/Number Plates....421

Dismantling....421

6.6.1. Front Number Plate (Only for India).... 421

6.6.2. Front Mudguard.... 421

6.6.3. Rear Number Plate (For Indian Market).... 421

6.6.4. Rear Mudguard 421

6.6.5. Reflector Rear 423

6.6.6. Rear Mudflap 424

Inspection 425

Assembly 425

6.6.7. Rear Mudflap 425

6.6.8. Reflector Rear 426

6.6.9. Rear Mudguard 427

6.6.10. Rear Number Plate (For Indian Market) 429

6.6.11. Front Mudguard 430

6.6.12. Front Number Plate (For Indian Market) 430

6.6. Mudguards/Number Plates

Dismantling

6.6.1. Front Number Plate (Only for India)

- As per Government norms high security number plates will be provided which are riveted with the vehicle and cannot be removed.

6.6.2. Front Mudguard

- Loosen and remove 4 Nos. allen head screw **(M6) (a)** from fork brace.

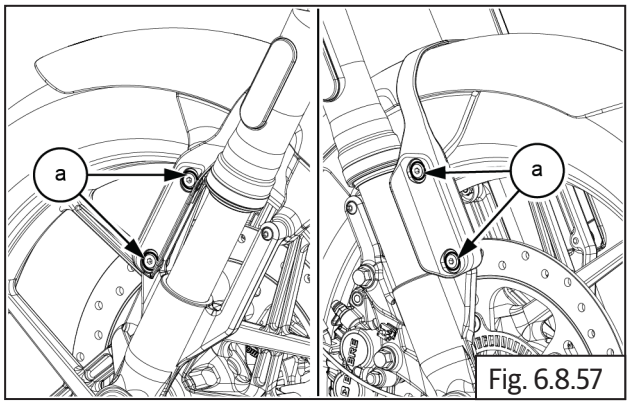

Fig. 6.8.57

	5 mm Allen socket with Ratchet

- Loosen and remove 2 Nos. allen head bolts **(M6) (a)** from fork brace.

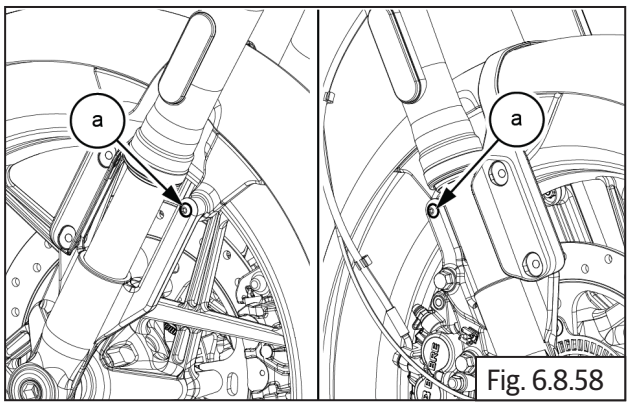

Fig. 6.8.58

	5 mm Allen socket with Ratchet

- Slightly lift mudguard **(a)** upwards, tilt it to one side and remove from fork ends.

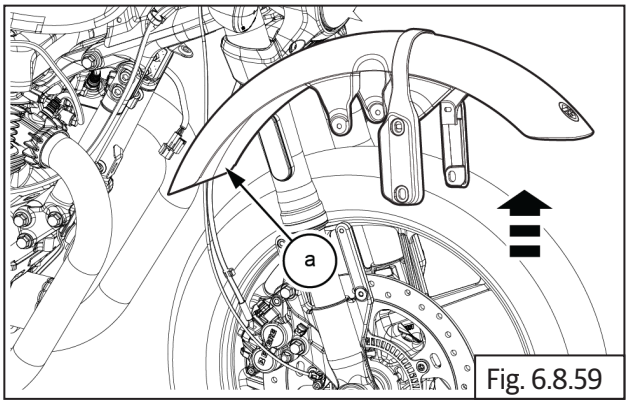

Fig. 6.8.59

- Separate the stay mudguard **(a)**.

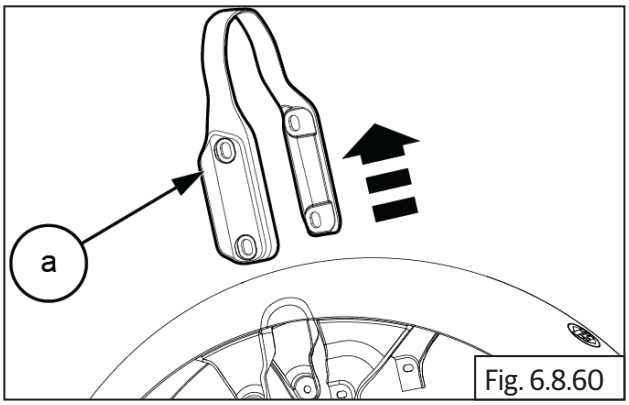

Fig. 6.8.60

6.6.3. Rear Number Plate (For Indian Market)

- As per Government norms high security number plates will be provided which are riveted with the vehicle and cannot be removed.

6.6.4. Rear Mudguard

- Remove the Rider seat.
- Remove the Pillion seat.
- Loosen and remove 3 Nos. button head bolts **(a)** from seat hook bracket.

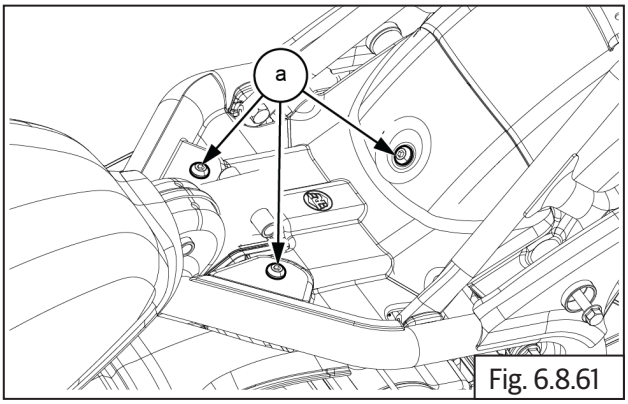

Fig. 6.8.61

	5 mm Allen socket with Ratchet

- Remove the upper infill panel **(a)**.

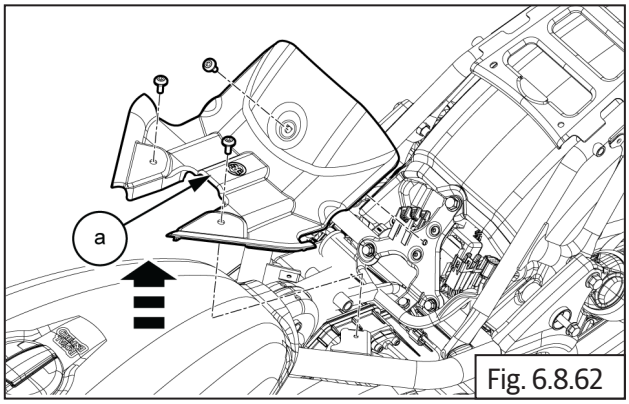

Fig. 6.8.62

- Disconnect rear electrical master connector **(a)**.

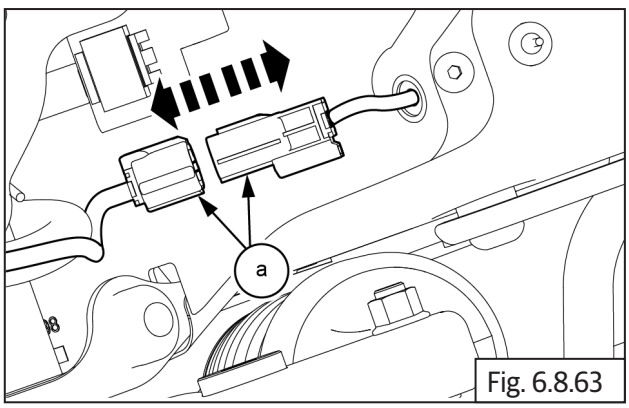

Fig. 6.8.63

- Disconnect roll over sensor connector **(a)**.

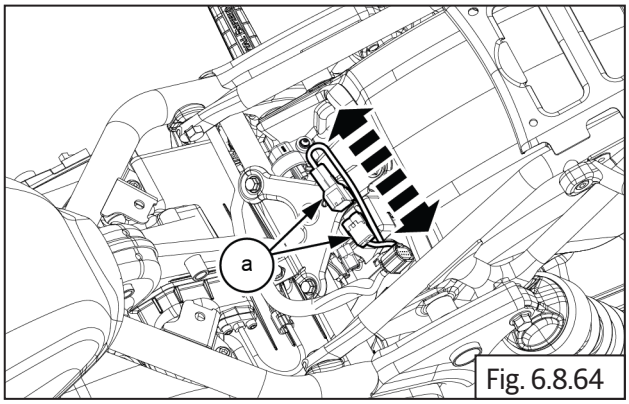

Fig. 6.8.64

- Pull out the both connectors from rubber grommet **(a)**.

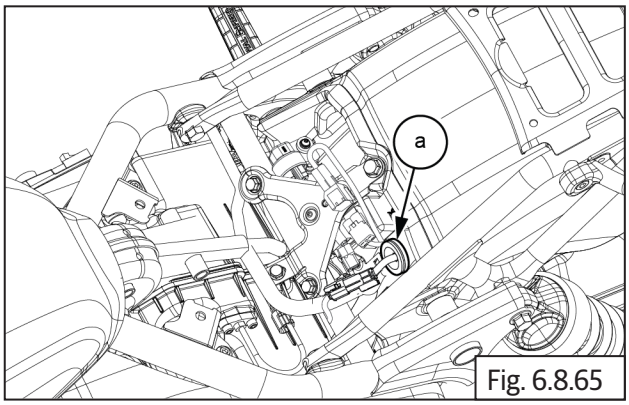

Fig. 6.8.65

- Loosen and remove 1 Nos hex bolt **(M8) (a)** nut with spacer from LHS rear mudguard.

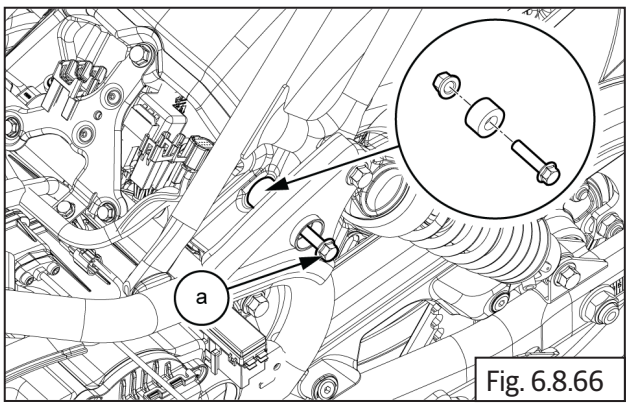

Fig. 6.8.66

	12 mm socket with Ratchet

- Loosen and remove 1 Nos hex bolt **(M8) (a)** nut with spacer from RHS rear mudguard.

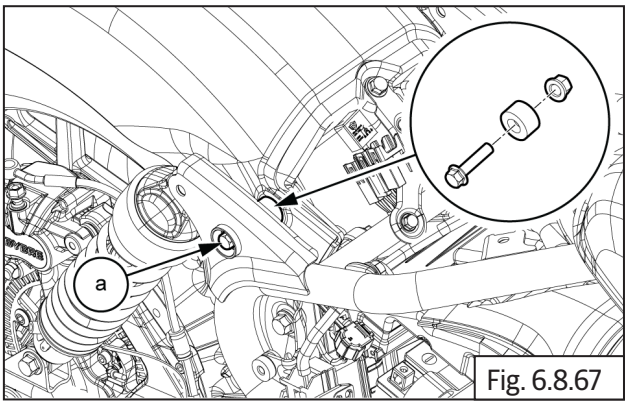

Fig. 6.8.67

	12 mm socket with Ratchet

- Loosen and remove 1 Nos. screw clip **(a)** from infill panel bottom .

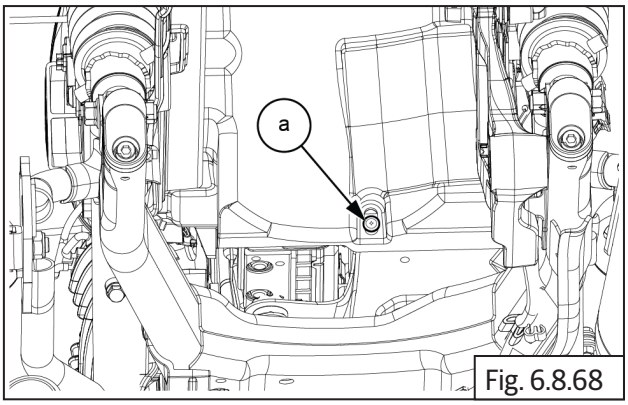

Fig. 6.8.68

	Screw driver

- Loosen and remove 1 Nos. hex head bolt **(M10) (a)** with nut **(b)** from LHS side mudguard.

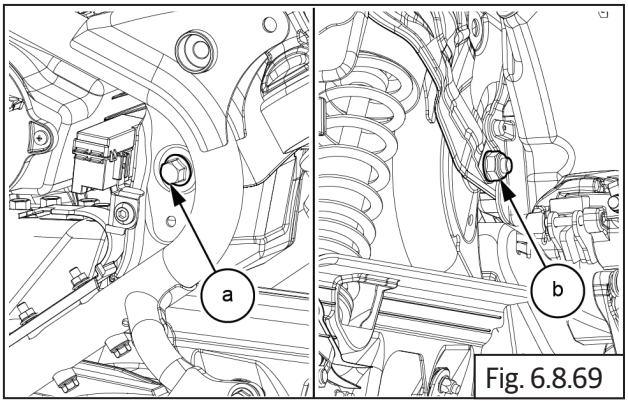

Fig. 6.8.69

	14 mm socket with Ratchet

- Loosen and remove 1 Nos. hex head bolt **(M10) (a)** with nut **(b)** from RHS side mudguard.

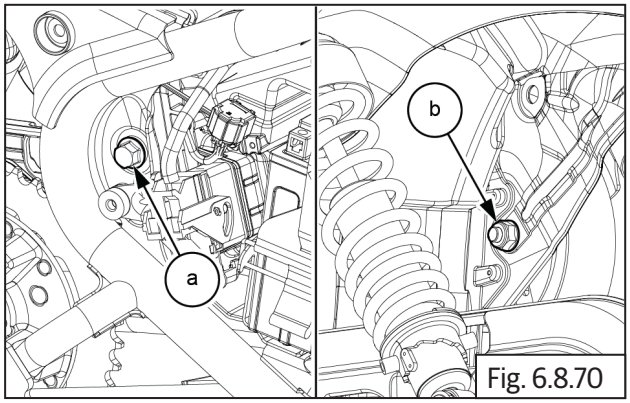

Fig. 6.8.70

	14 mm socket with Ratchet

- Loosen and remove 1 Nos. hex head top bolt **(M8) (a)** with nut **(b)** from rear mudguard.

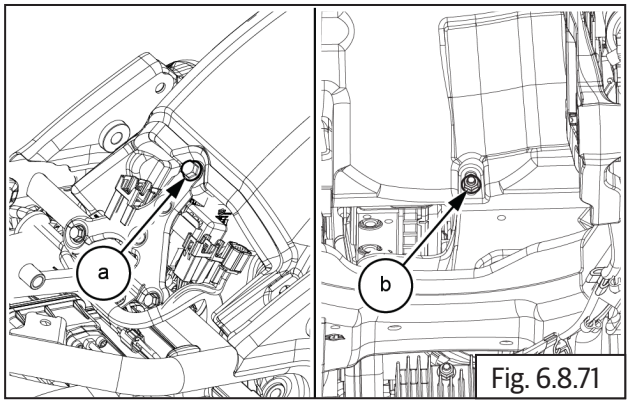

Fig. 6.8.71

	12 mm socket with Ratchet

- Remove rear mudguard **(a)** from frame.

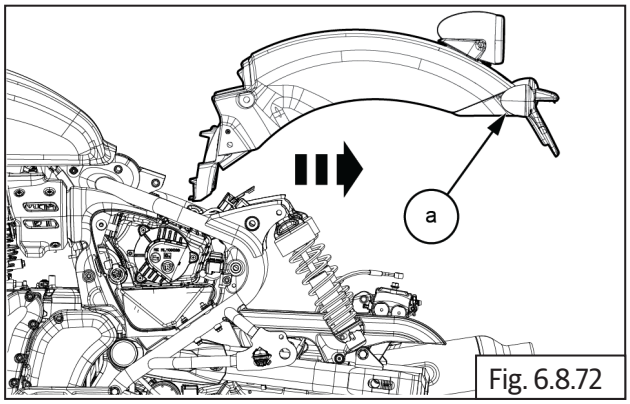

Fig. 6.8.72

6.6.5. Reflector Rear

- Loosen and remove Hex nut 3Nos **(M6) (a)** from mudflap.

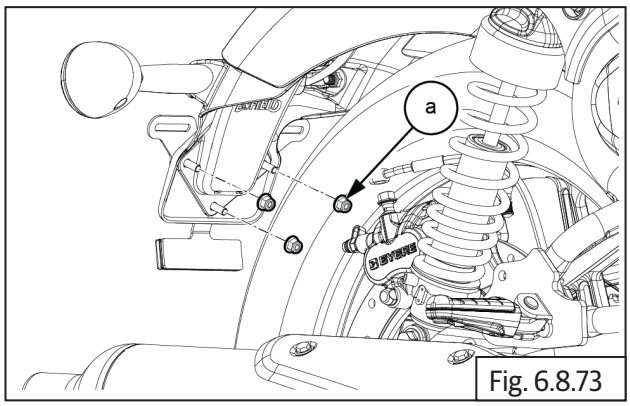

Fig. 6.8.73

	10 mm Socket with Ratchet

- Remove rear reflector with bracket **(a).**

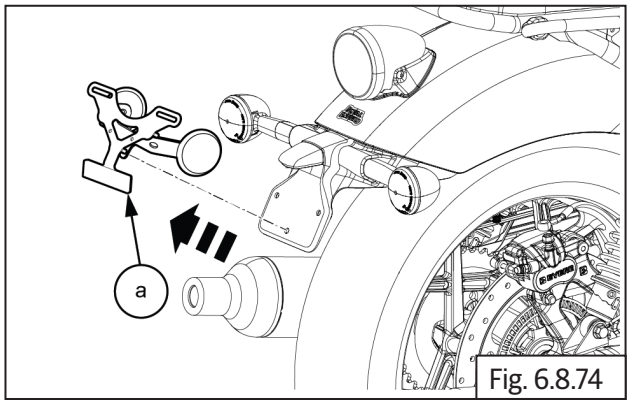

Fig. 6.8.74

- Remove side reflector **(a)** from the bracket **(b).**

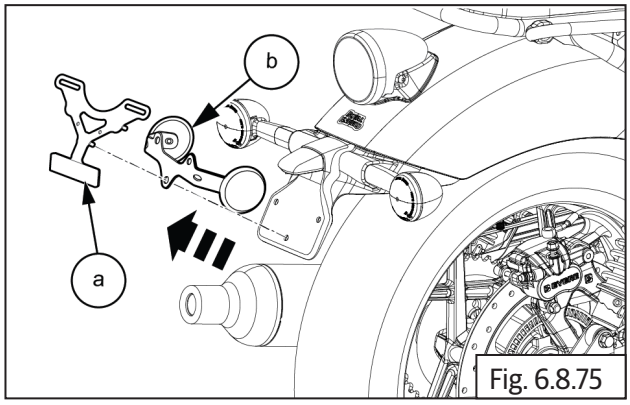

Fig. 6.8.75

- Loosen and remove Hex nuts **(M6) (a)** with washers 2 Nos **(b)** from side reflector **(a)**.

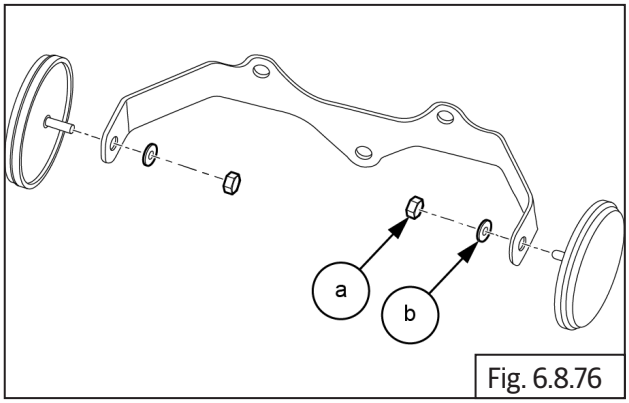

Fig. 6.8.76

	7 mm Socket with Ratchet

6.6.6. Rear Mudflap

- Remove the Rider seat.
- Remove the Pillion seat.
- Disconnect rear electrical master connector **(a)**.

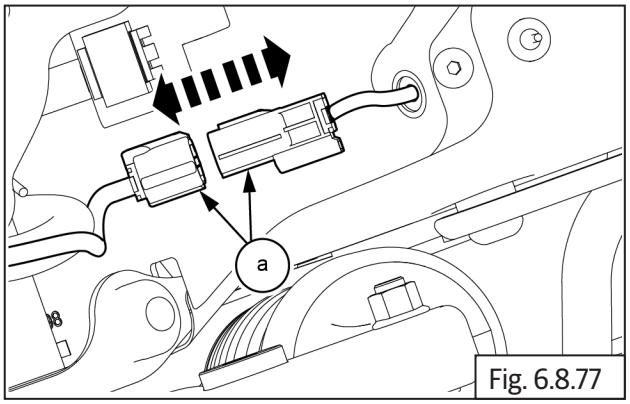

Fig. 6.8.77

- Disconnect roll over sensor connector **(a)**.

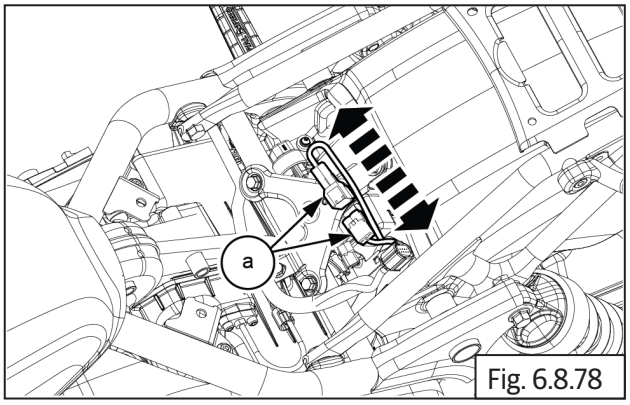

Fig. 6.8.78

- Pull out the both connectors from rubber grommet **(a)**.

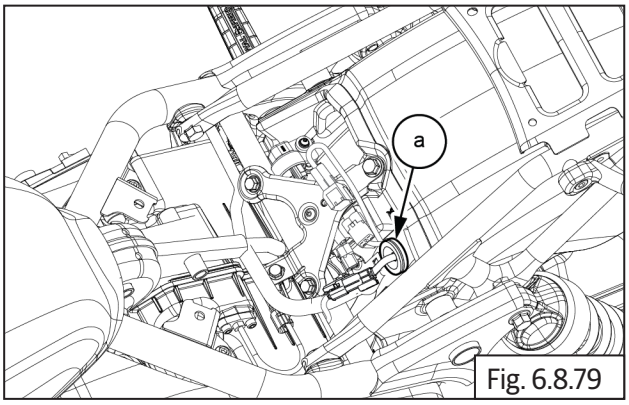

Fig. 6.8.79

- Slide out wiring harness **(a)** from mudguard clips.

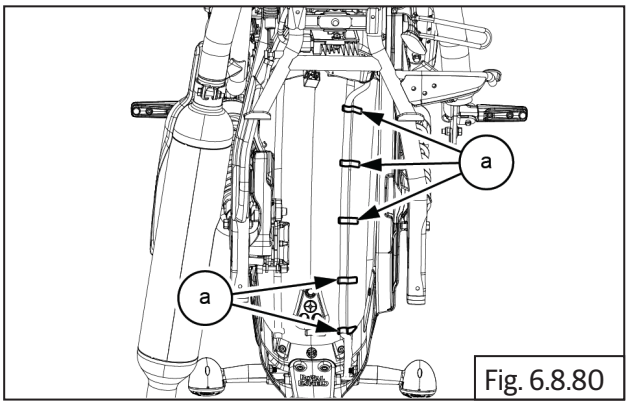

Fig. 6.8.80

- Loosen and remove 4 Nos. allen head screws **(M5) (a)** from mudflap.

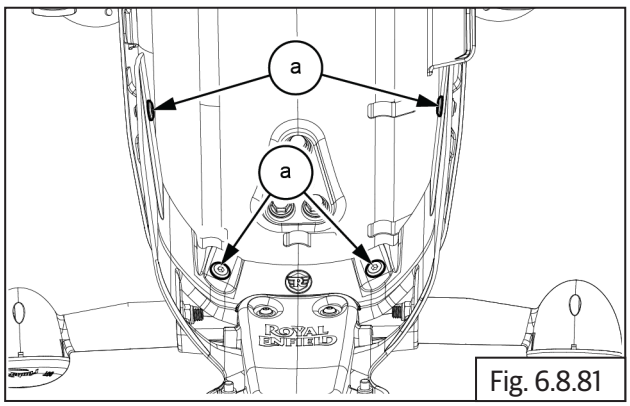

Fig. 6.8.81

	5 mm Allen socket with Ratchet

- Remove mudflap **(a)** from rear mudguard.

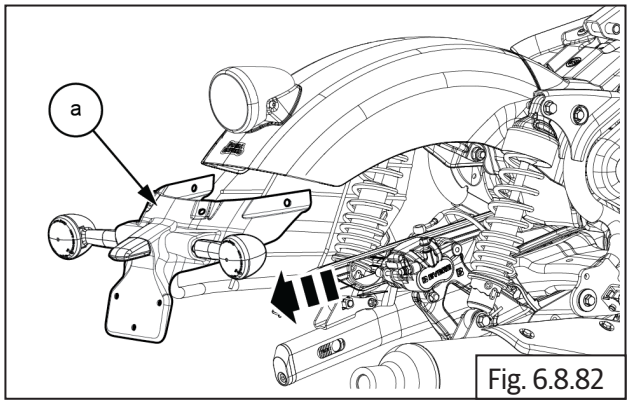

Fig. 6.8.82

- Remove the Rear Reflector.
- Remove the Rear traficator.
- Remove the Rear Number plate lamp.

Inspection

Mudguard/Reflector

- Clean front and rear Mudguard. Inspect for any scratches, cracks, damages on mudguard and replace if required.
- Inspect rear mudflap for any cracks or damages. Replace if required.
- Inspect rear reflector for any cracks or damages. Replace if required.

Assembly

6.6.7. Rear Mudflap

- Install the Rear Reflector.
- Install the Rear traficator.
- Install the Rear Number plate lamp.

⚠ CAUTION
DO NOT over tighten bolts and nuts as it may crack or break the plastic parts and cause vibration and noise while driving.

- Locate the rear mudflap **(a)** into mudguard and ensure the mounting holes are aligned.

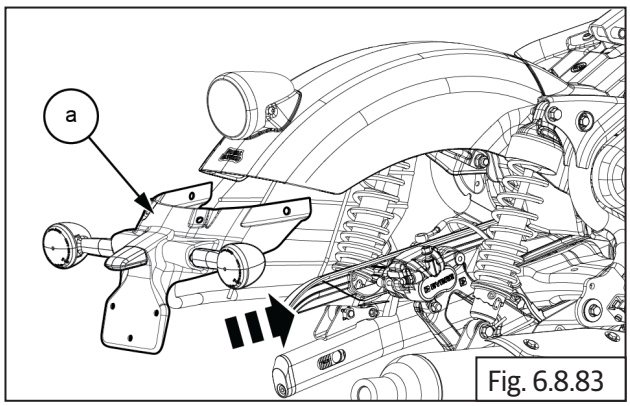

Fig. 6.8.83

- Locate and tighten 4 Nos. allen head screws **(M5) (a)** into mudflap.

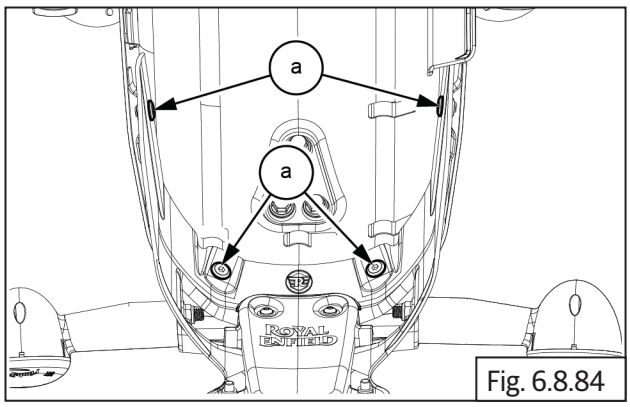

Fig. 6.8.84

	5 mm Allen socket with Ratchet
Torque	7 N-m / 0.7 kgf-m

- Locate the wiring harness **(a)** into mudguard clips

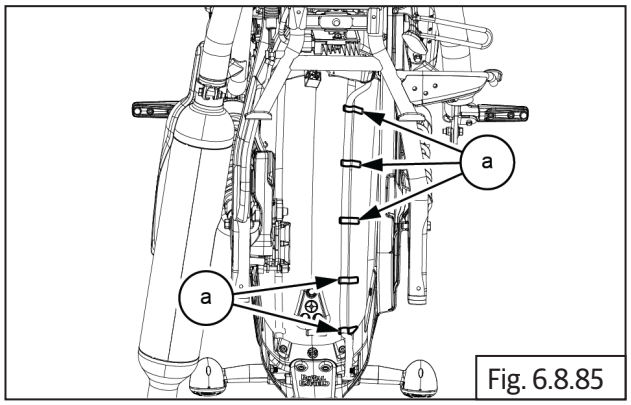

Fig. 6.8.85

- Insert both connectors into the rubber grommet **(a)**.

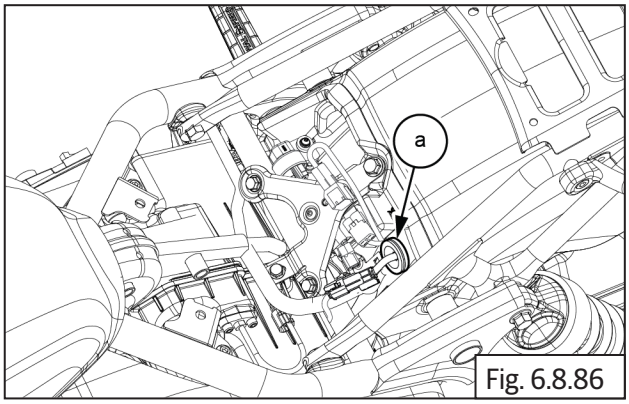

Fig. 6.8.86

- Connect roll over sensor connector **(a)**.

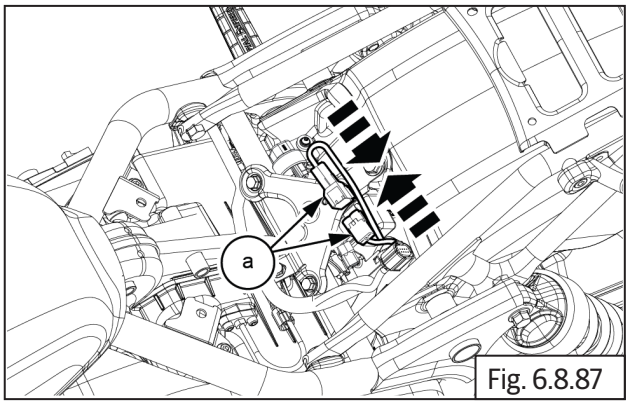

Fig. 6.8.87

- Connect rear electrical master connector **(a)**.

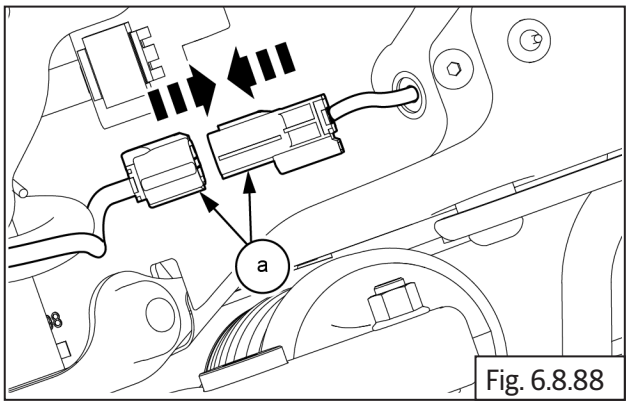

Fig. 6.8.88

- Install the Rider seat.
- Install the Pillion seat.

6.6.8. Reflector Rear

- Locate and tighten Hex nut **(M6) (a)** 2 Nos with washers **(b)** into side reflector.

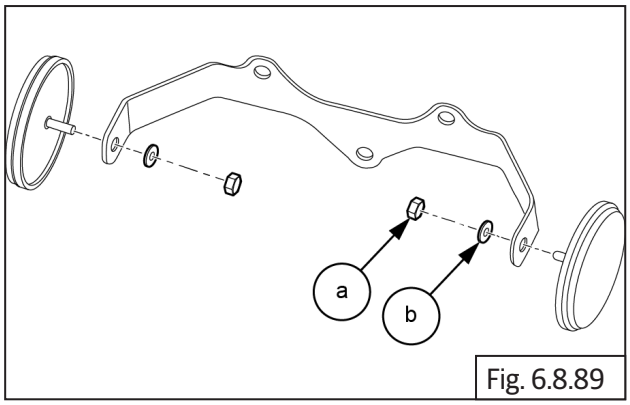

Fig. 6.8.89

	7 mm Socket with Ratchet
Torque	4 N-m / 0.4 kgf-m

- Locate the side reflector with bracket **(a)** into mudguard and ensure the mounting holes are aligned.

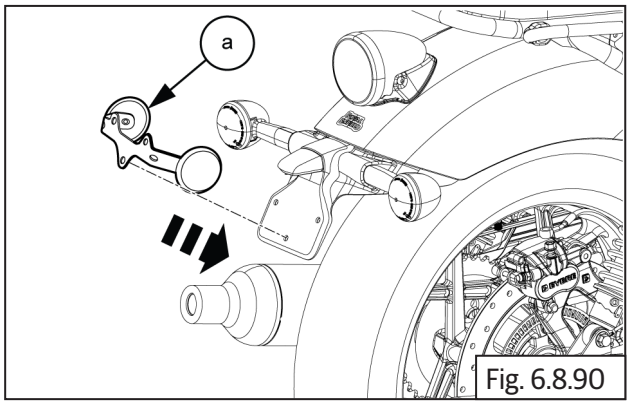

Fig. 6.8.90

- Locate the rear reflector with bracket **(a)** into mudguard and ensure the mounting holes are aligned.

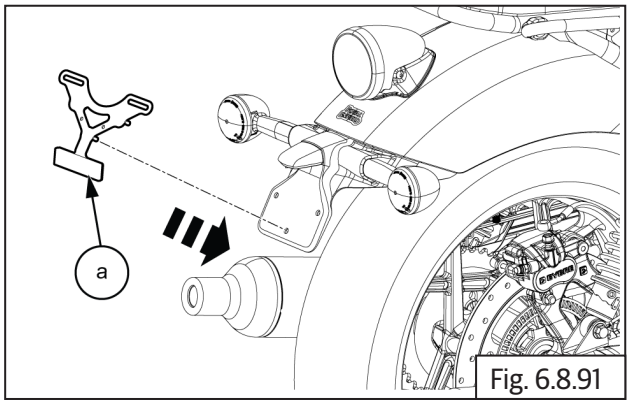

Fig. 6.8.91

- Locate and tighten Hex nut 3 Nos **(M6) (a)** into reflector **(b)**.

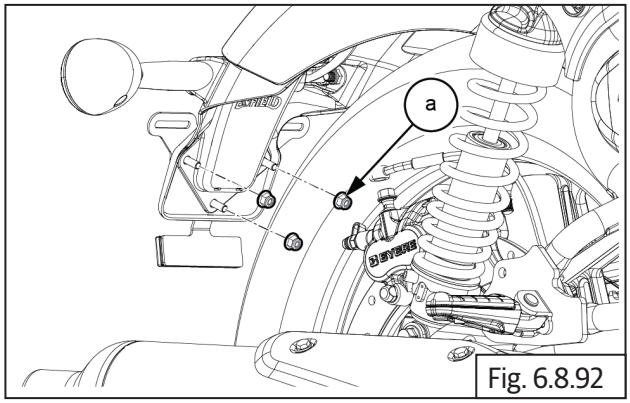

Fig. 6.8.92

	10 mm Socket with Ratchet
Torque	4 N-m / 0.4 kgf-m

6.6.9. Rear Mudguard

NOTE
• *Do not over tighten bolts and nuts into mudflaps and mudguards, it may crack or break the plastic parts and cause noise or vibration while driving.*

- Locate the rear mudguard **(a)** into frame and ensure the mounting holes are aligned.

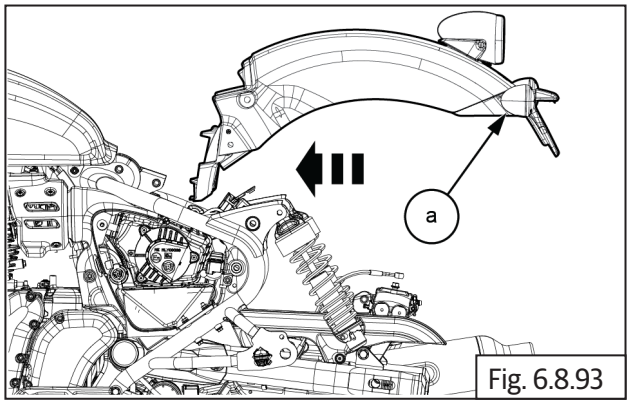

Fig. 6.8.93

- Locate and tighten 1 Nos. hex head top bolt **(M8) (a)** with nut **(b)** from rear mudguard.

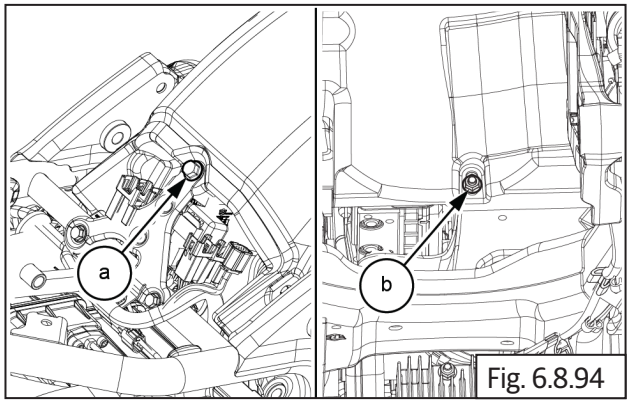

Fig. 6.8.94

	12mm socket with Ratchet
Torque	33-35 N-m / 3.3-3.5 kgf-m

- Locate and tighten 1 Nos. hex head bolt **(M10) (a)** with nut **(b)** from RHS side mudguard.

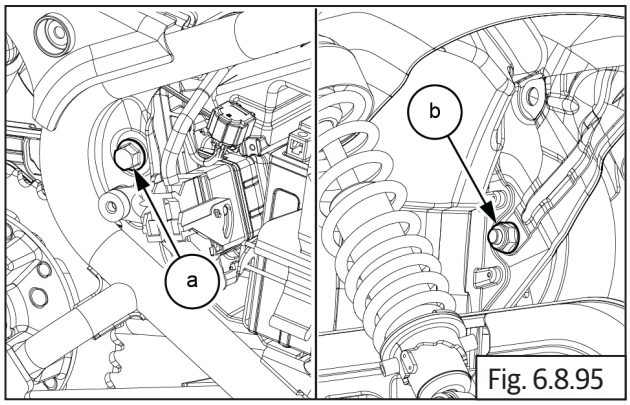

Fig. 6.8.95

	14 mm socket with Ratchet
Torque	45 N-m / 4.5 kgf-m

- Locate and tighten 1 Nos. hex head bolt **(M10) (a)** with nut **(b)** from LHS side mudguard.

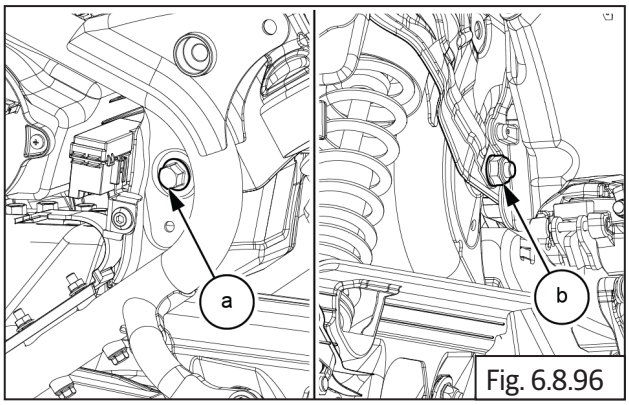

Fig. 6.8.96

	14mm socket with Ratchet
Torque	45 N-m / 4.5 kgf-m

- Locate and tighten 1 Nos. screw clip **(a)** from infill panel bottom .

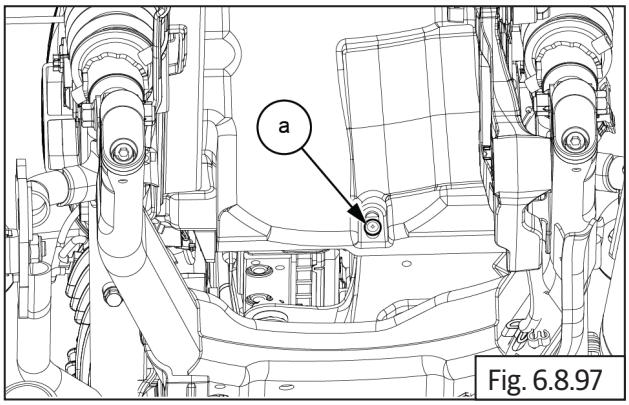

Fig. 6.8.97

	Screw driver

- Locate and tighten 1 Nos hex bolt **(M8) (a)** nut with spacer from RHS rear mudguard.

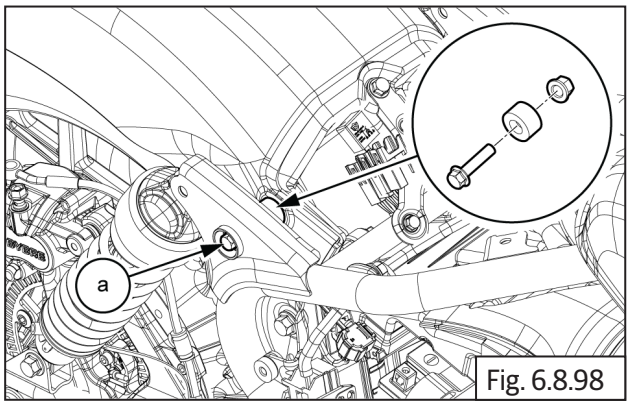

Fig. 6.8.98

	12 mm socket with Ratchet
Torque	33-35 N-m / 3.3-3.5 kgf-m

- Locate and tighten 1 Nos hex bolt **(M8) (a)** nut with spacer from LHS rear mudguard.

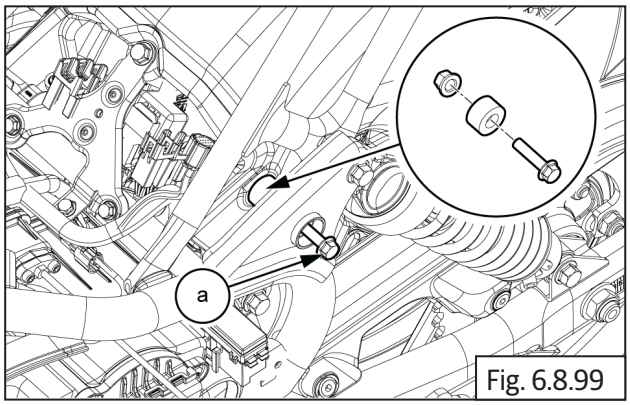

Fig. 6.8.99

	12mm socket with Ratchet
Torque	33-35 N-m / 3.3-3.5 kgf-m

- Insert both connectors into the rubber grommet **(a)**.

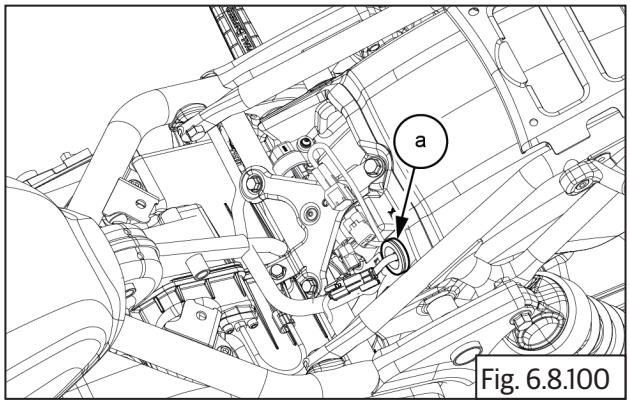

Fig. 6.8.100

- Connect roll over sensor connector **(a)**.

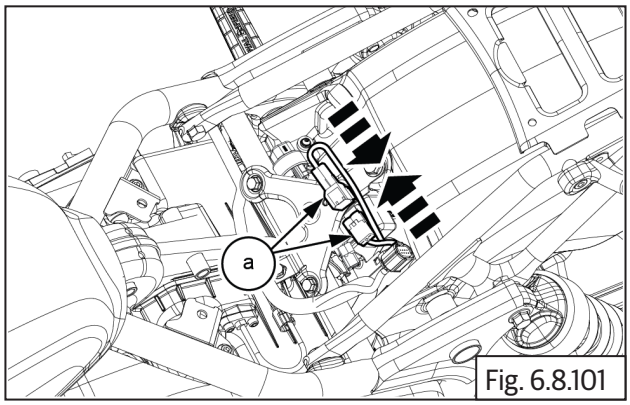

Fig. 6.8.101

- Connect rear electrical master connector **(a)**.

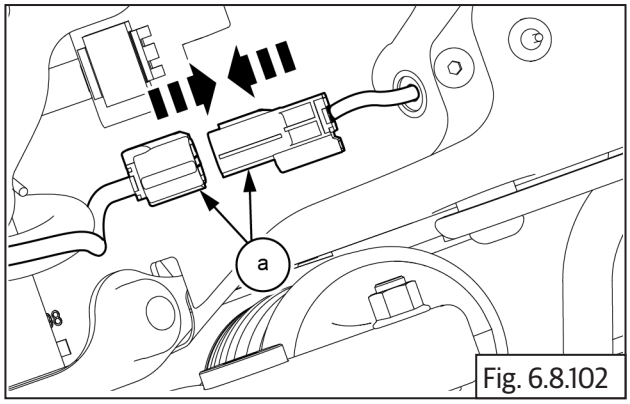

Fig. 6.8.102

- Locate the upper infill panel **(a)**.

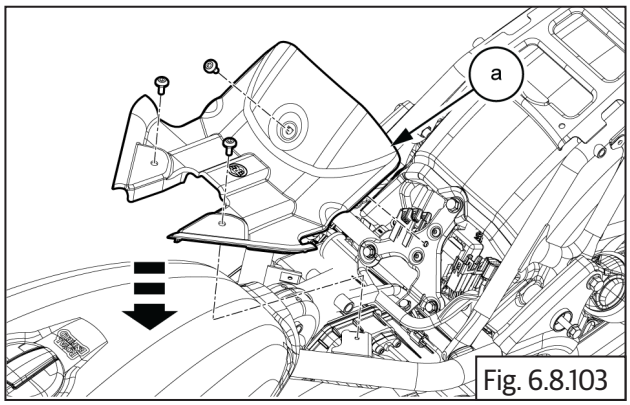

Fig. 6.8.103

- Loosen and remove 3 Nos. button head bolts **(a)** from seat hook bracket.

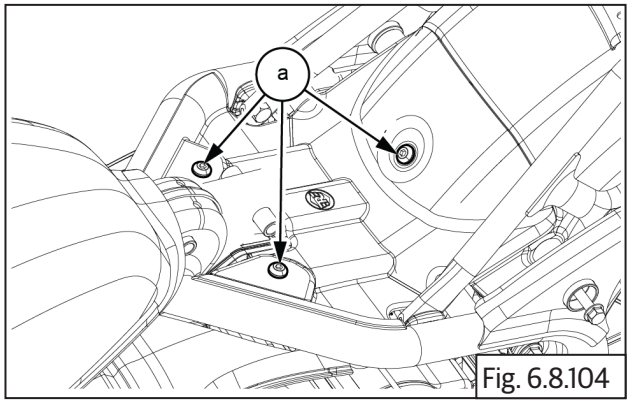

Fig. 6.8.104

	5 mm Allen socket with Ratchet
Torque	8 N-m / 0.8 kgf-m

- Install the Rider seat.
- Install the Pillion seat.

6.6.10. Rear Number Plate (For Indian Market)

- As per Government norms high security number plates will be provided which are riveted with the vehicle and cannot be removed.

6.6.11. Front Mudguard

NOTE
• *Do not over tighten bolts and nuts into mudflaps and mudguards, it may crack or break the plastic parts and cause noise or vibration while driving.*

- Stick double side tape **(a)** on stay mudguard inner surface.

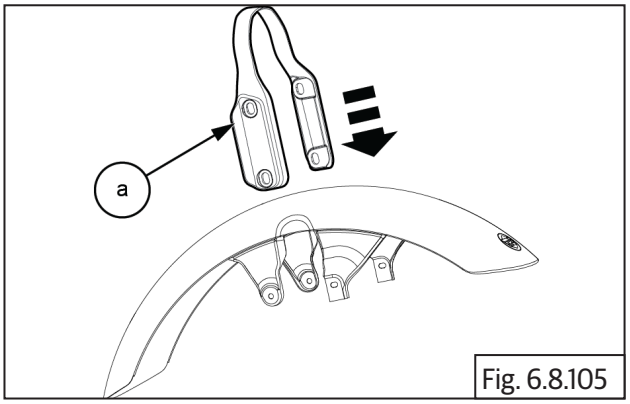

Fig. 6.8.105

- Locate the front mudguard **(a)** into fork brace and ensure the mounting holes are aligned.

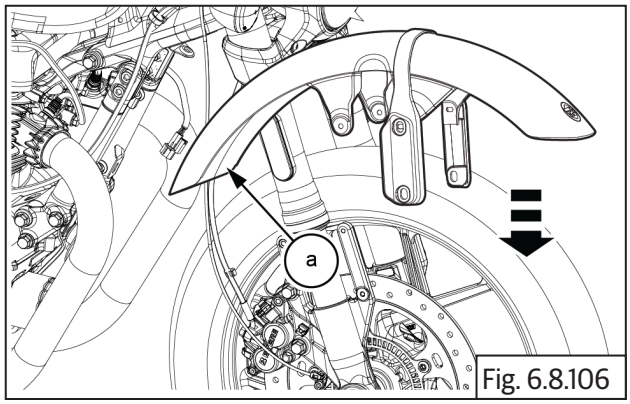

Fig. 6.8.106

- Locate and tighten 2 Nos. allen head bolt **(M6) (a)** into fork brace.

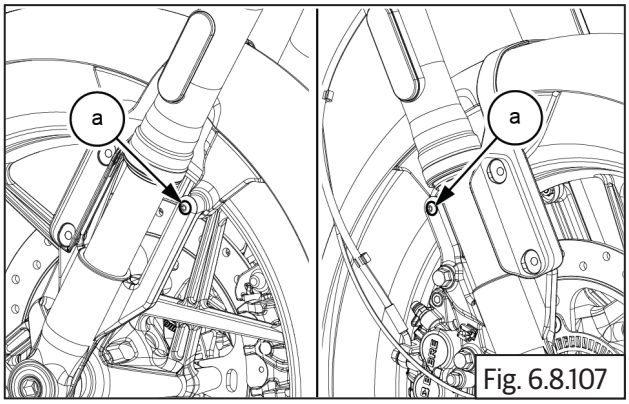

Fig. 6.8.107

	5 mm Allen socket with Ratchet
Torque	8 N-m/0.8 kgf-m

- Locate and tighten 4 Nos. allen head bolt **(M6) (a)** into fork brace.

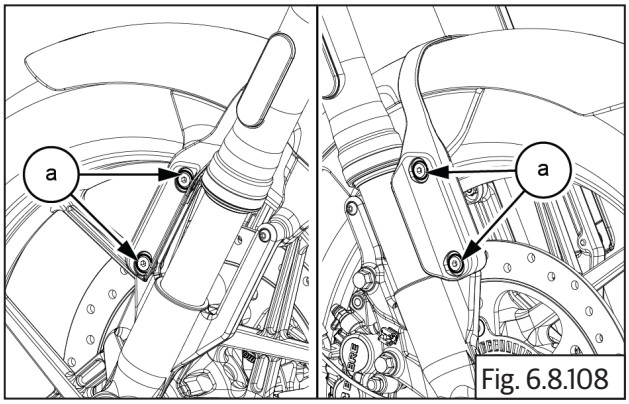

Fig. 6.8.108

	5 mm Allen socket with Ratchet
Torque	8 N-m/0.8 kgf-m

6.6.12. Front Number Plate (Only for India)

- As per Government norms high security number plates will be provided which are riveted with the vehicle and cannot be removed.

SIDE PANELS AND SEATS

CONTENTS **PAGE**

6.7 Side Panels and Seats 434

Dismantling 434

6.7.1. Side Panel RH 434

6.7.2. Side Panel LH 434

6.7.3. Throttle Body Cover 435

6.7.4. RH Infill Panel 435

6.7.5. LH Infill Panel 435

6.7.6. Pillion Seat 436

6.7.7. Rider Seat 437

Assembly 438

6.7.8. Rider Seat 438

6.7.9. Pillion Seat 438

6.7.10. LH Infill Panel 439

6.7.11. RH Infill Panel 440

6.7.12. Throttle Body Cover 441

6.7.13. Side Panel LH 441

6.7.14. Side Panel RH 441

6.7 Side Panels and Seats

Dismantling

6.7.1. Side Panel RH

- Loosen and remove flat head screws 2 nos **(M6) (a)** from RHS reservoir panel.

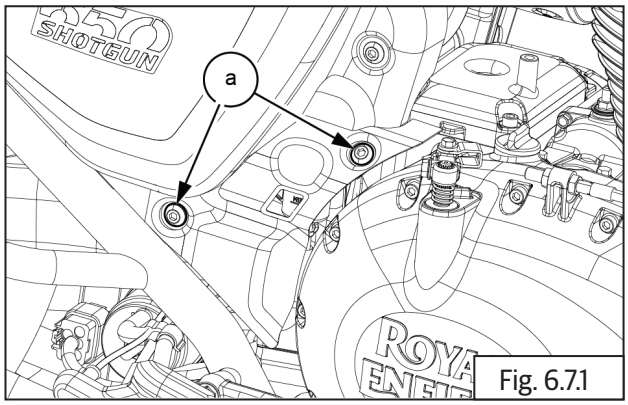

Fig. 6.7.1

	5 mm Allen Socket with Ratchet

- Remove the reservoir panel **(a)** from RHS side panel.

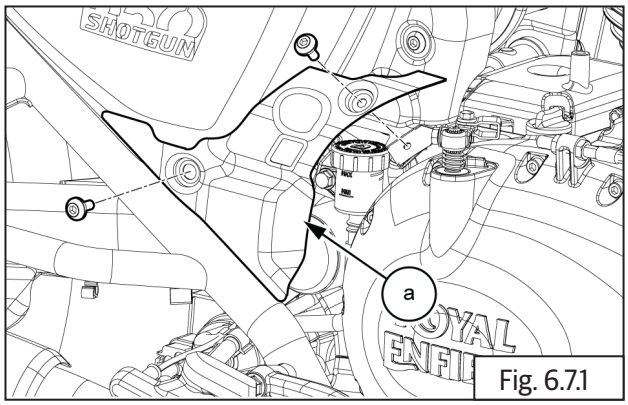

Fig. 6.7.1

- Gently Pull the RHS side panel **(a)** outside for opening the same.

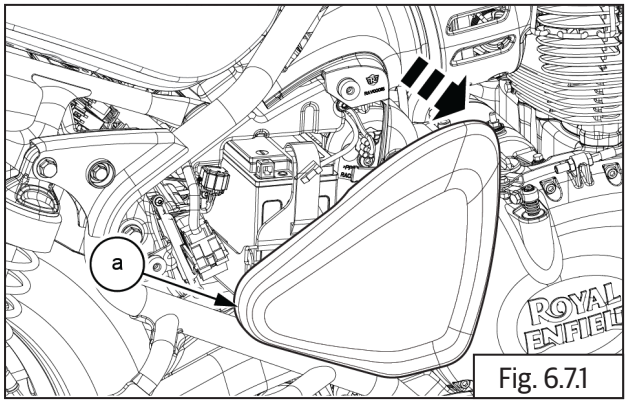

Fig. 6.7.1

6.7.2. Side Panel LH

- Insert ignition key **(a)** and turn it anticlockwise.

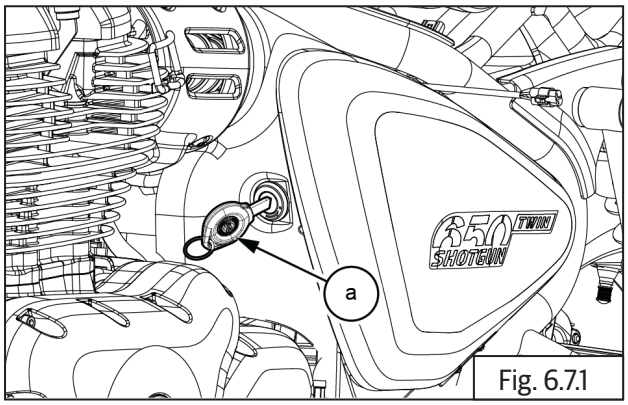

Fig. 6.7.1

- Gently Pull the LHS side panel **(a)** outside for opening the same.

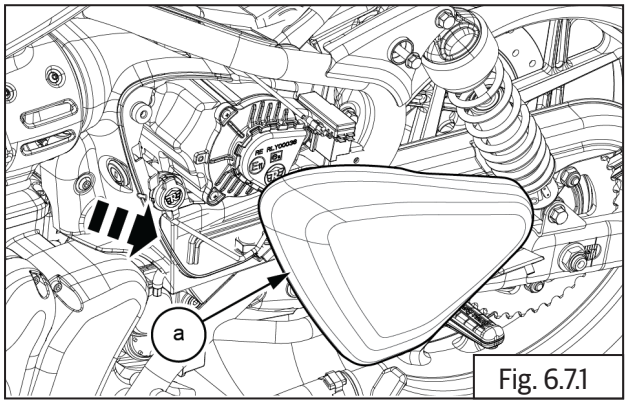

Fig. 6.7.1

6.7.3. Throttle Body Cover

- Loosen and remove 6 Nos. allen head screws **(M5) (a)** from LH and RH side throttle body cover.
- Remove the both covers **(b)** from throttle body.

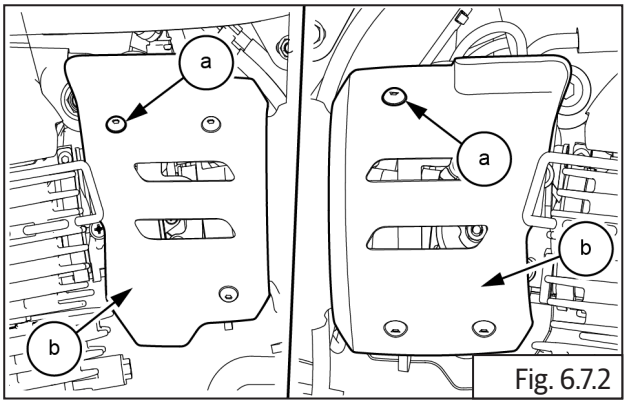

Fig. 6.7.2

	4 mm Allen Socket with Ratchet

6.7.4. RH Infill Panel

- Remove the Side Panel RH.
- Loosen and remove 2Nos button head bolts **(a) (M6)** from RH side infill panel.

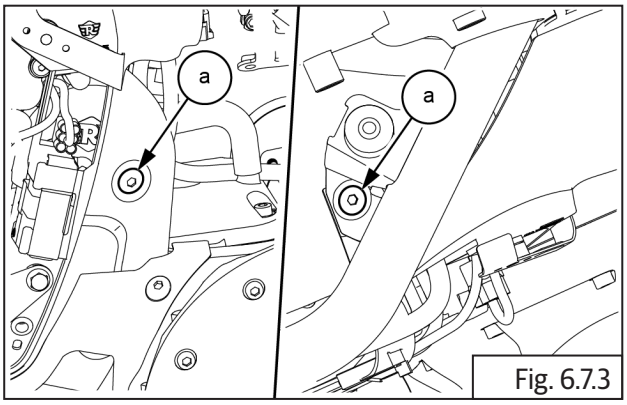

Fig. 6.7.3

	5 mm Allen Socket with Ratchet

- Remove the RH side infill panel **(a)** from frame.

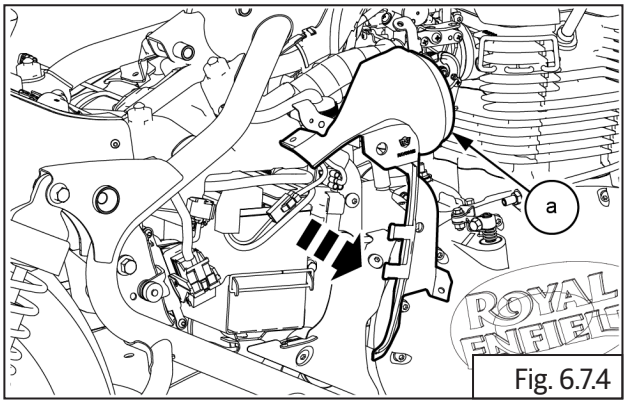

Fig. 6.7.4

6.7.5. LH Infill Panel

- Remove the following parts:
  - Side Panel LH.
- Loosen and remove 2Nos button head bolts **(a) (M6)** from LH side infill panel.

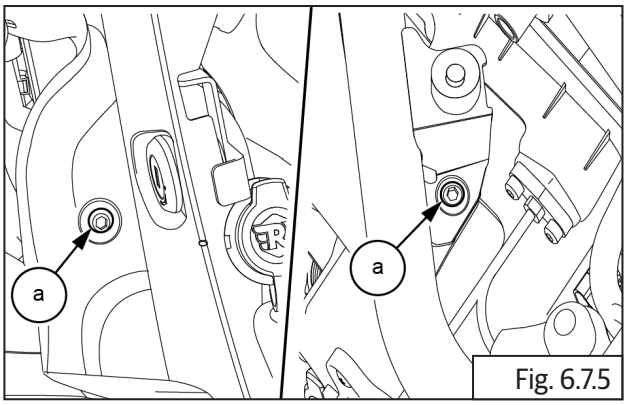

Fig. 6.7.5

	5 mm Allen Socket with Ratchet

- Loosen and remove 2Nos hex bolts with nut **(a) (M6)** from side panel.

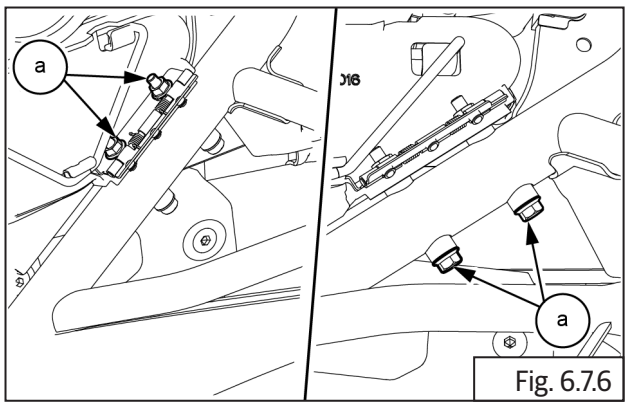

Fig. 6.7.6

	10 mm Socket with Ratchet

- Disconnect USB port **(a)** wiring coupler.

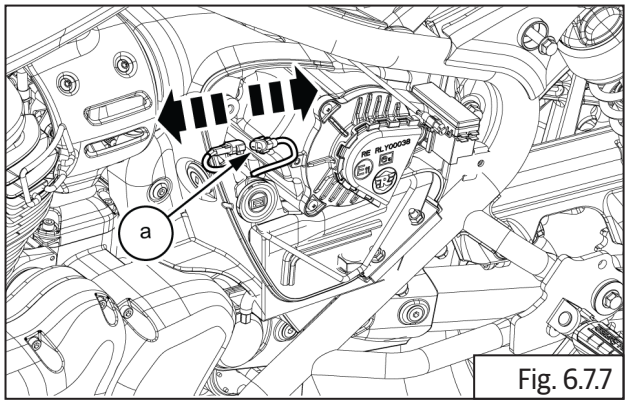

Fig. 6.7.7

- Remove the LH side infill panel **(a)** from frame.

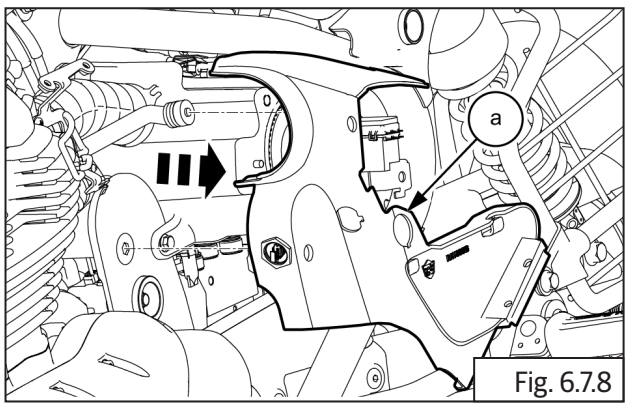

Fig. 6.7.8

6.7.6. Pillion Seat

NOTE
• Please Take care while disassembling and assembling the seats, and sheet metal parts, as any sharp edges will lead to injuries.

- Insert ignition key **(a)** and turn it clockwise unlock the pillion seat.

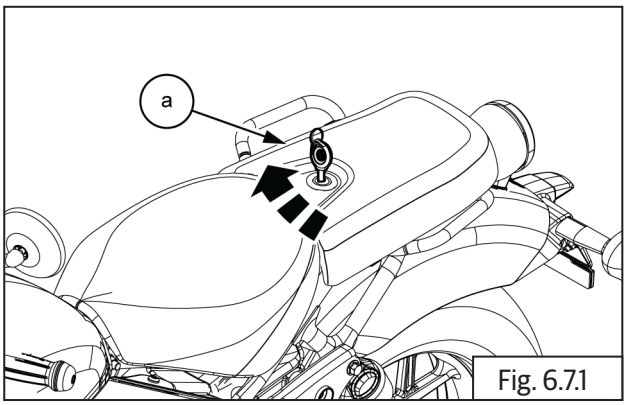

Fig. 6.7.1

	5 mm Allen Socket with Ratchet

- Lift the seat from front end and slide it towards front to remove pillion seat **(a).**

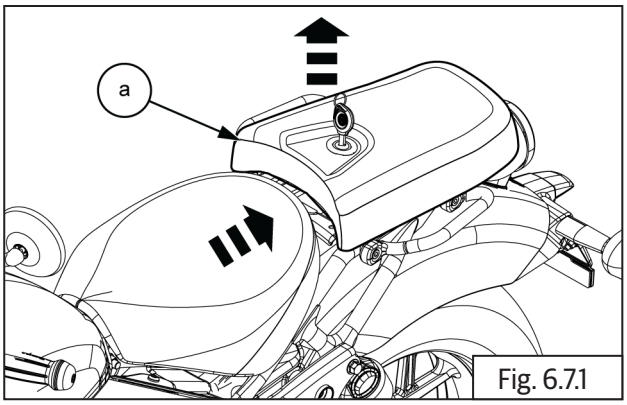

Fig. 6.7.1

NOTE
• *Place the seat in a safe location to prevent from scratches and dirt.*

6.7.7. Rider Seat

- Remove Hex flange bolts **(a)** with nuts **(b)** 2 nos from seat frame.

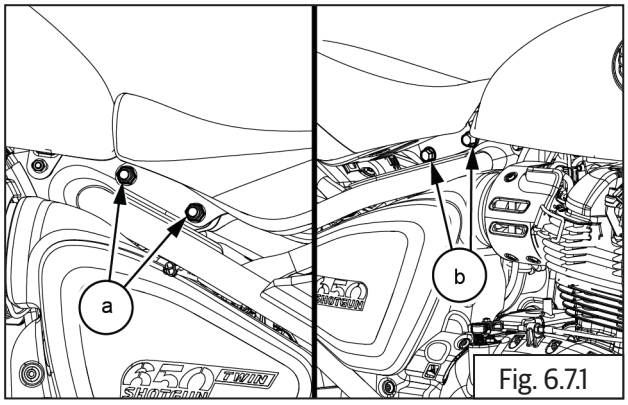

Fig. 6.7.1

	14 mm Hex Socket with Ratchet

- Lift the seat from rear end and slide it towards rear to remove rider seat **(a)** with bracket.

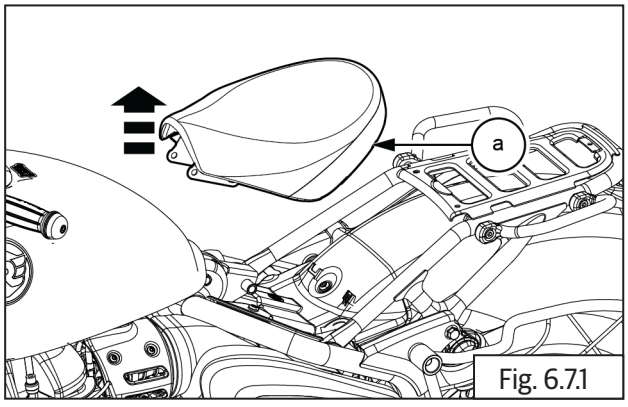

Fig. 6.7.1

NOTE
• *Place the seat in a safe location to prevent from scratches and dirt.*

Assembly

6.7.8. Rider Seat

- Ensure mounting holes of the rider seat **(a)** are aligned with frame.

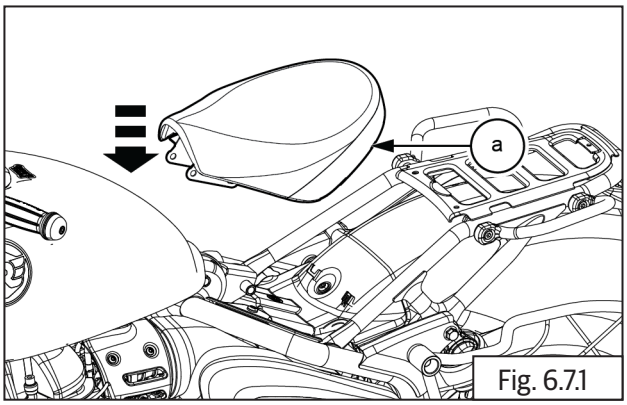

Fig. 6.7.1

- Place the Hex flange bolts **(a)** with nuts **(b)** 2 nos and tighten it.

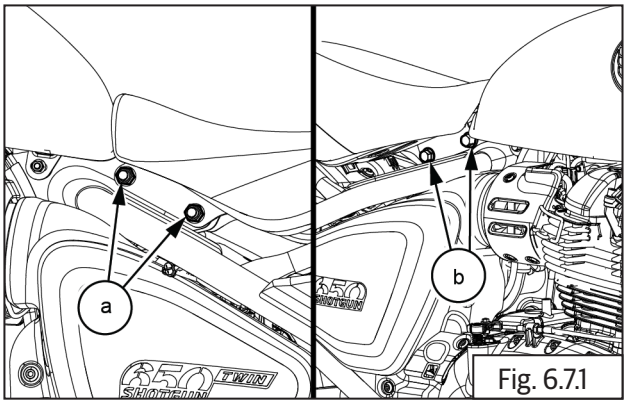

Fig. 6.7.1

	14 mm Socket with Ratchet
Torque	45 Nm / 4.5 Kg-ft

6.7.9. Pillion Seat

- Locate the pillion seat **(a)** by hooking it sideways over the frame.

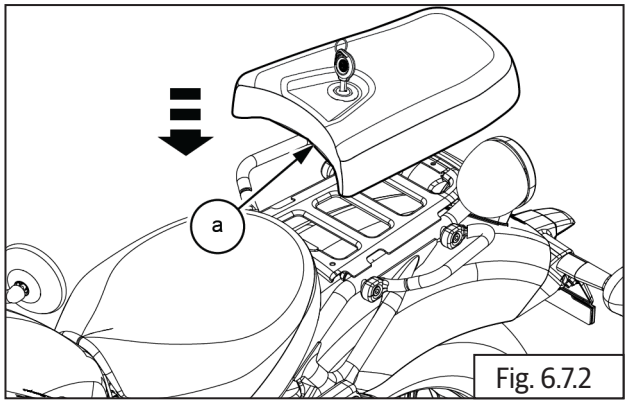

Fig. 6.7.2

- Insert ignition key **(a)** and turn it Anti clockwise to lock the pillion seat.

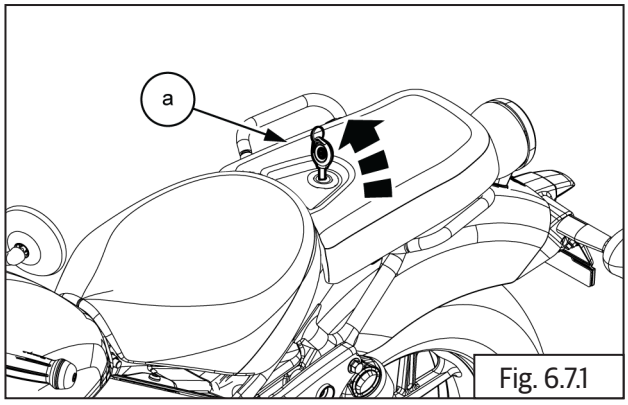

Fig. 6.7.1

6.7.10. LH Infill Panel

- Locate the LH side infill panel **(a)** into frame.

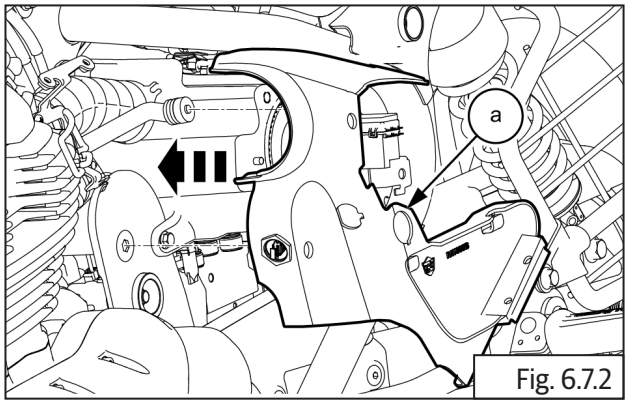

Fig. 6.7.2

- Connect USB port **(a)** wiring coupler.

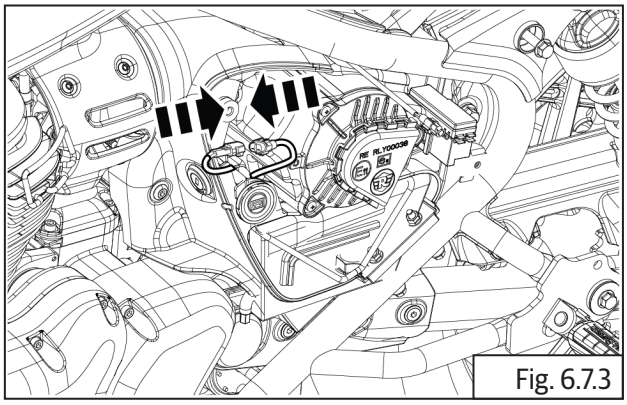
Fig. 6.7.3

- Locate and tighten 2Nos hex bolts with nut **(a) (M6)** on LH side panel.

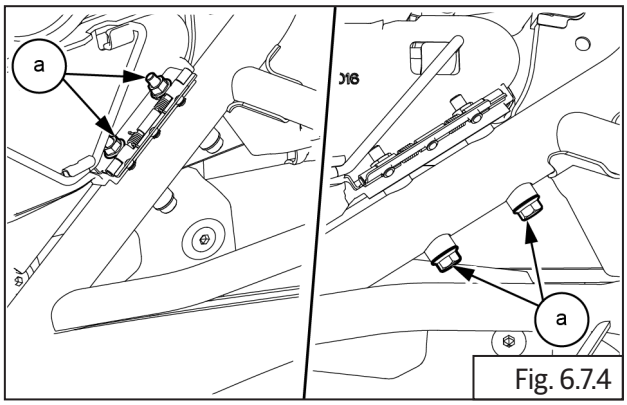

Fig. 6.7.4

	10 mm Socket with Ratchet
Torque	3 N-m to 5 N-m / 0.3 to 0.5 kgf-m

- Locate and tighten 2Nos button head bolts **(a) (M6)** on LH side infill panel.

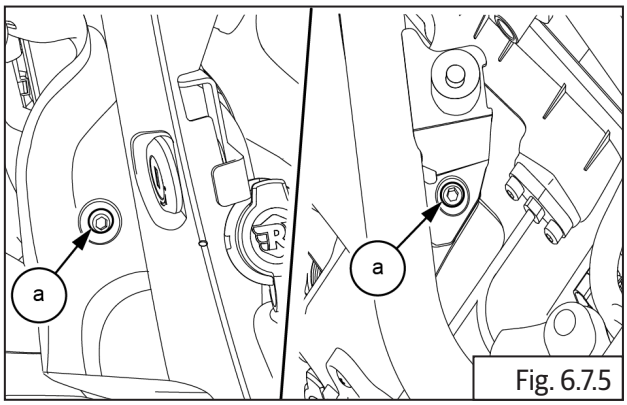

Fig. 6.7.5

	5 mm Allen Socket with Ratchet
Torque	3 N-m to 5 N-m / 0.3 to 0.5 kgf-m

- Assemble the Side Panel LH.

6.7.11. RH Infill Panel

- Locate the RH side infill panel **(a)** on frame.

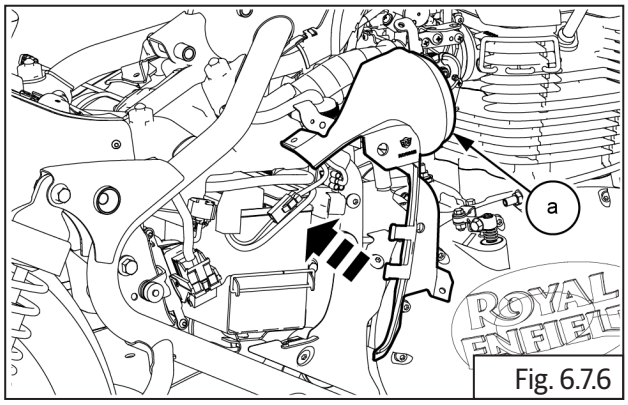

Fig. 6.7.6

- Locate and tighten 2Nos button head bolts **(a) (M6)** on RH side infil panel.

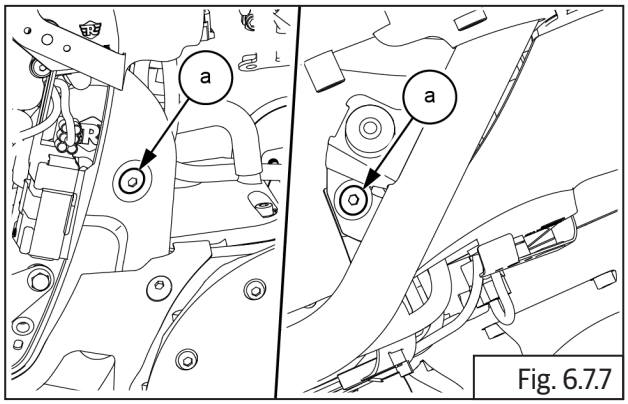

Fig. 6.7.7

	5 mm Allen Socket with Ratchet
Torque	3 N-m to 5 N-m / 0.3 to 0.5 kgf-m

- Assemble the Side Panel RHS .

6.7.12. Throttle Body Cover

- Locate the LHS and RHS cover into throttle body **(b).**
- Locate and tighten 6 Nos. allen head screws **(a)** on LH and RH throttle body.

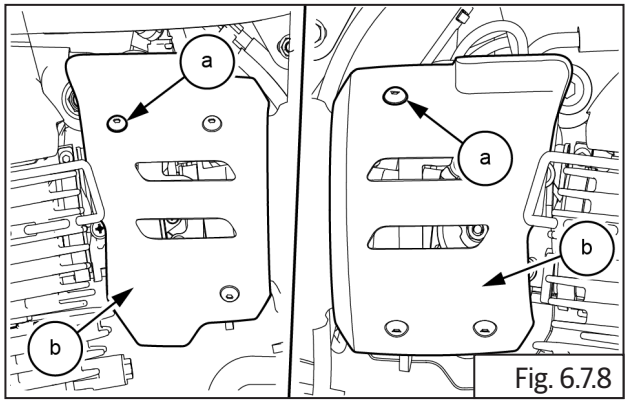

Fig. 6.7.8

	4 mm Allen Socket with Ratchet
Torque	7 N-m / 0.7 kgf-m

6.7.13. Side Panel LH

- Turn LHS side panel **(a)** and position in fully closed position.

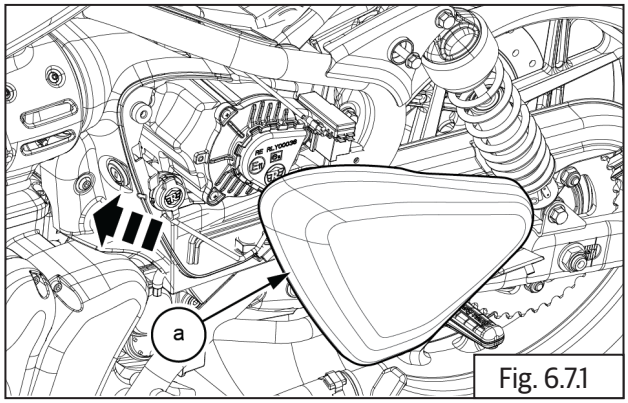

Fig. 6.7.1

• Turn the key **(a)** clockwise to lock.

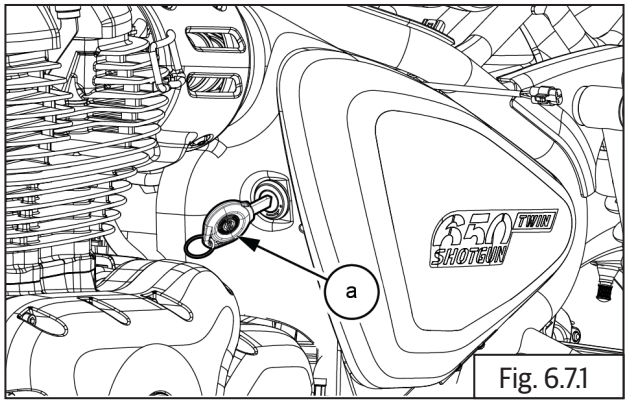

Fig. 6.7.1

6.7.14. Side Panel RH

- Locate the RHS side panel **(a)** into the frame.

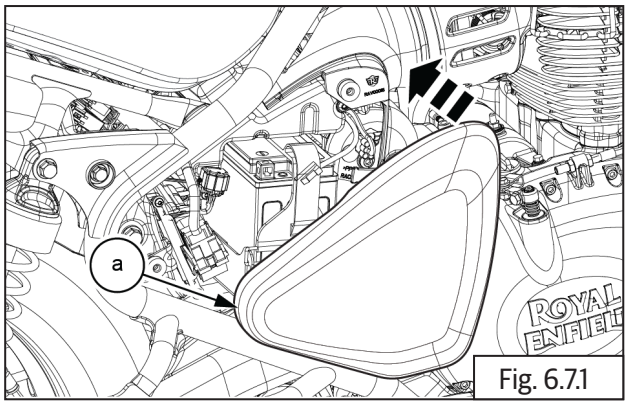

Fig. 6.7.1

- Locate the reservoir panel **(a)** on RHS side panel.

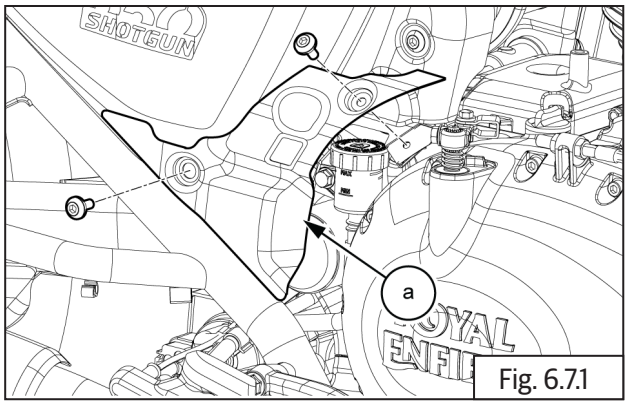

Fig. 6.7.1

- Locate and tighten the flat head screws 2 nos **(M6) (a)** on the RHS reservoir panel.

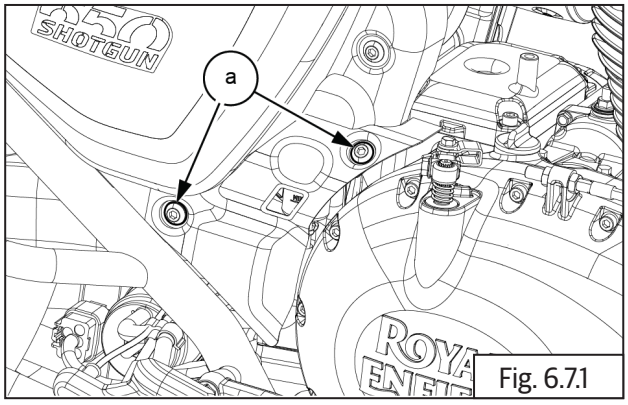

Fig. 6.7.1

	5 mm Allen Socket with Ratchet
Torque	3 - 5 N-m / 0.3 - 0.5 kgf-m

WHEELS

CONTENTS PAGE

6.8 Wheels 446

Dismantling 446

6.8.1. Front Wheel Assembly 446

6.8.2. Front Wheel and Brake Disc 447

6.8.3. Rear Wheel from Swing Arm 449

6.8.4. Rear Wheel and Brake Disc 451

Inspection 454

6.8.5. Front Wheel and Brake Disc 454

6.8.6. Rear Wheel and Brake Disc 457

Assembly 459

6.8.7. Tyre Assembly On Wheel Rim 459

6.8.8. Rear Wheel and Brake Disc 459

6.8.9. Rear Wheel into Swing Arm 462

6.8.10. Drive Chain Free Play Adjustment 464

6.8.11. Tyre Assembly on Wheel Rim 465

6.8.12. Front Wheel and Front Brake Disc 466

6.8.13. Front Wheel into Front Fork Assembly 467

Troubleshooting 469

6.8 Wheels

Dismantling

6.8.1. Front Wheel Assembly

⚠ CAUTION

Ensure the motorcycle is upright on a firm and flat surface.

- Locate a scissor jack under the engine and lift motorcycle such that the front wheel is off the ground by minimum 6 inches (or 15 cm).

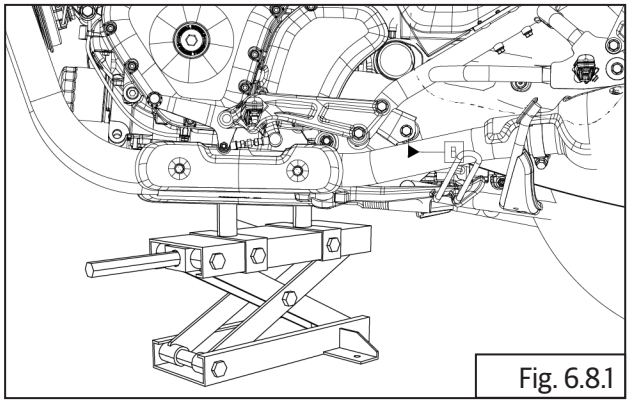

Fig. 6.8.1

- Loosen and remove allen head bolt **(M6) (a)** from LHS front fork assembly.

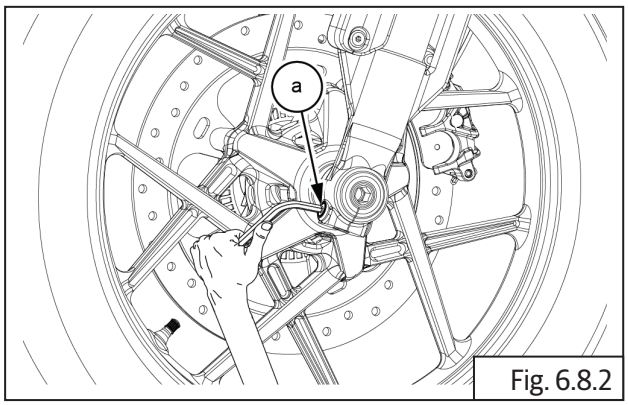

Fig. 6.8.2

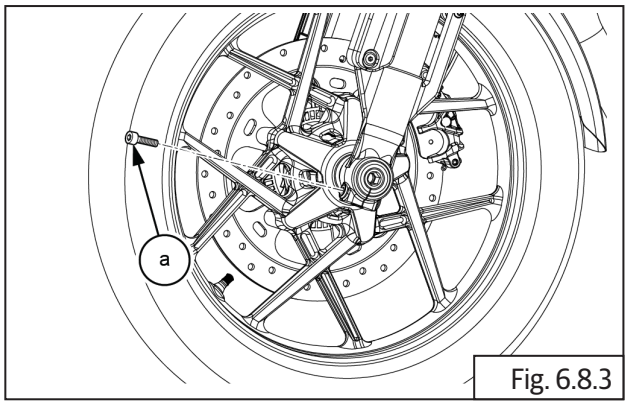

Fig. 6.8.3

	6 mm Allen key

- Loosen and remove allen head spindle bolt **(M16) (a)** from LHS front fork assembly.

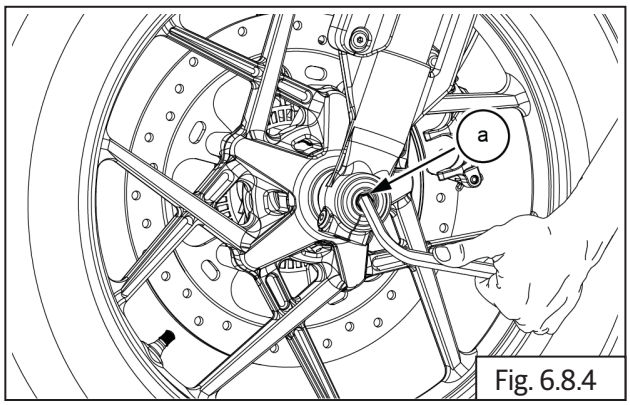

Fig. 6.8.4

	14 mm Allen key

- Gently remove spindle **(a)** from wheel hub and front fork assembly LHS **(b)**.

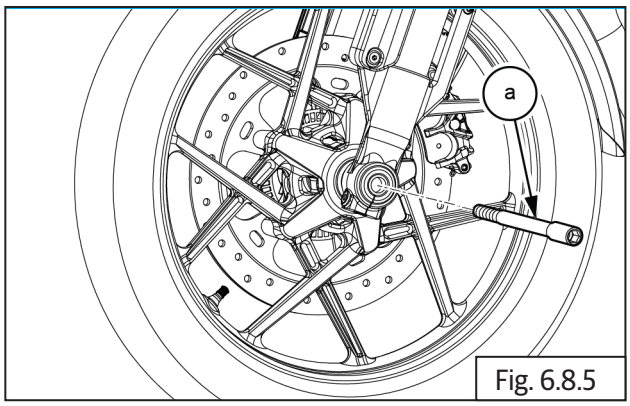

Fig. 6.8.5

- Gently lower the wheel **(a)** such that it comes out of the fork legs **(b)**.

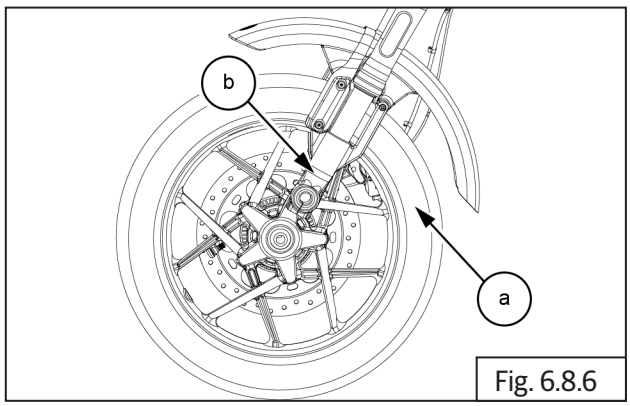

Fig. 6.8.6

- Remove RHS **(a)** and LHS **(b)** spacers from front wheel hub.

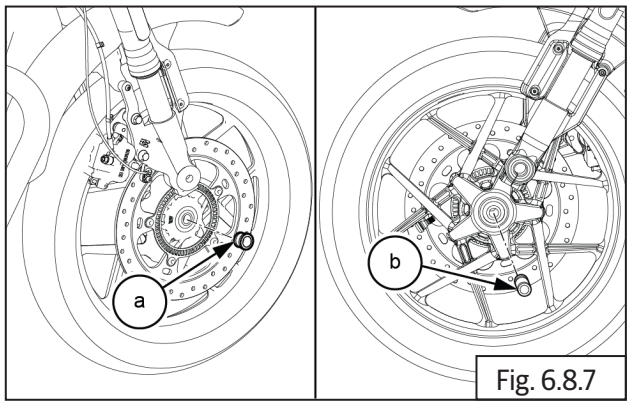

Fig. 6.8.7

6.8.2. Front Wheel and Brake Disc

⚠ WARNING

DO NOT place/store the wheel with disc facing downward. It will damage and change disc warpage.

⚠ CAUTION

Place a soft cloth under the wheel hub center mounting hole area to prevent damage.

Please loosen thread sealant applied screws with care.

- Loosen and remove 5 Nos. Hex socket head bolts **(M6) (a)** holding disc plate to hub in crisscross pattern.

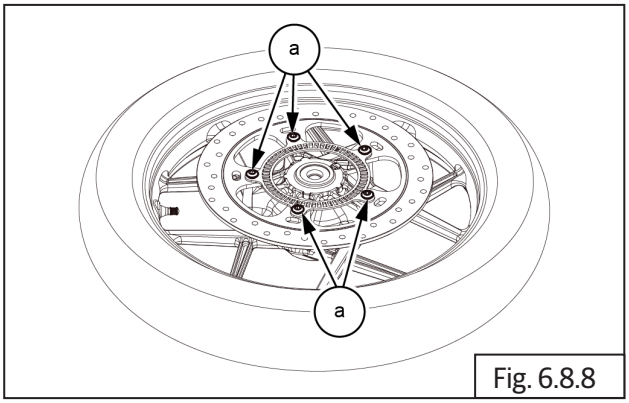

Fig. 6.8.8

	6 mm Allen socket with Ratchet

- Remove toner wheel front **(a)** from hub and store carefully.

⚠ CAUTION

Avoid any bends or damages to the toner wheel as it will affect the functioning of ABS.

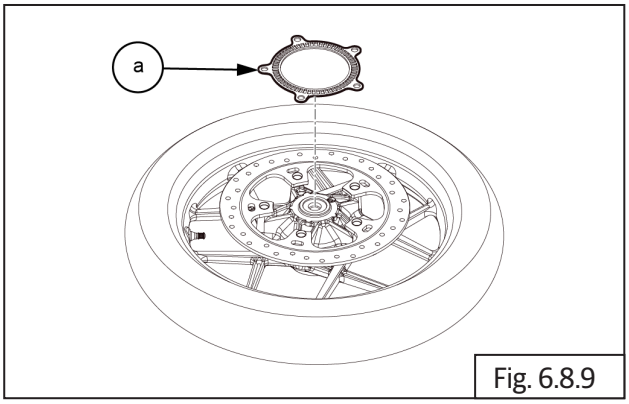

Fig. 6.8.9

- Remove front brake disc **(a)** from hub and store carefully.

⚠ CAUTION

Ensure the brake disc does not get damaged as it will affect the brake efficiency.

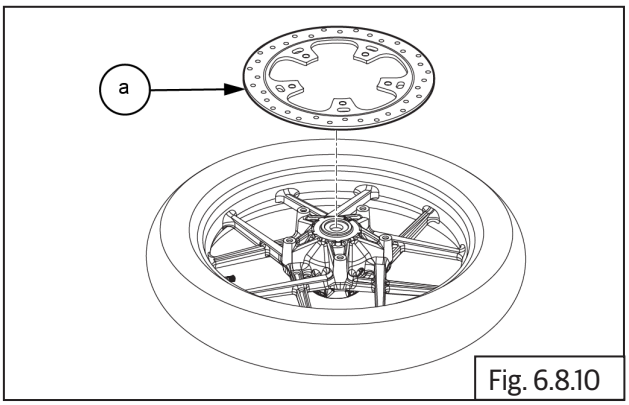

Fig. 6.8.10

- Remove grease seal **(a)** from LH.

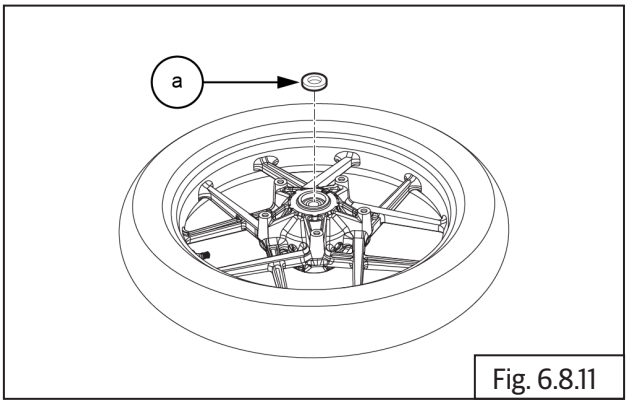

Fig. 6.8.11

	Screw Driver

- Locate a suitable pointed punch on hole in spacer from RH of hub to remove bearing LH **(a)**.

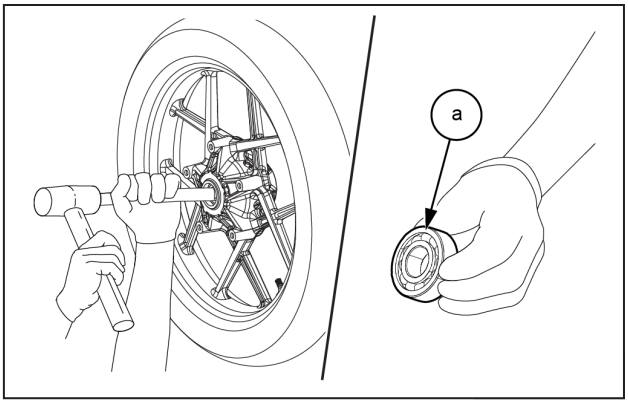

	Punch and Mallet

- Insert a punch into hub from LH side and drive out bearing RH **(a)**.

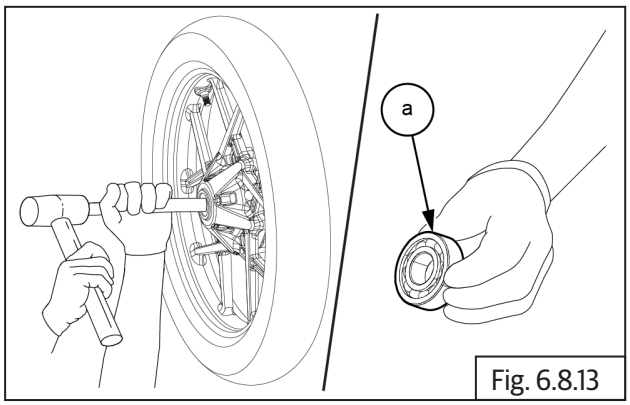

Fig. 6.8.13

	Punch and Mallet

- Remove spacer **(a)** from wheel hub.

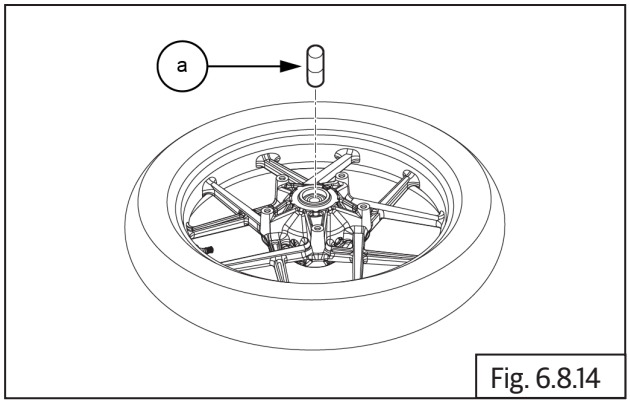

Fig. 6.8.14

- Remove grease seal **(a)** from LH.

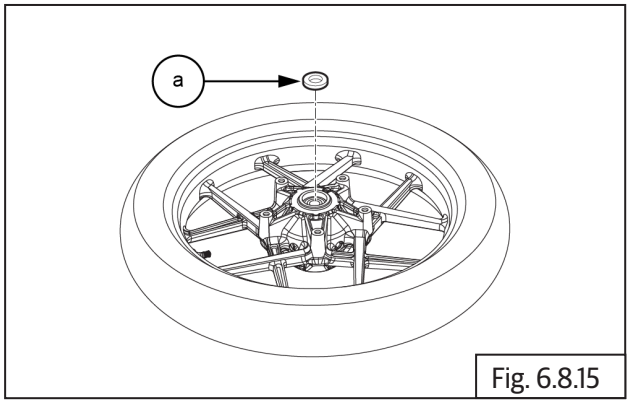

Fig. 6.8.15

	Screw Driver

6.8.3. Rear Wheel from Swing Arm

⚠ CAUTION

Ensure the motorcycle is upright on a firm and flat surface.

- Locate a scissor jack under the cradle frame and lift motorcycle such that the front wheel is off the ground by minimum 6 inches (or 15 cm).

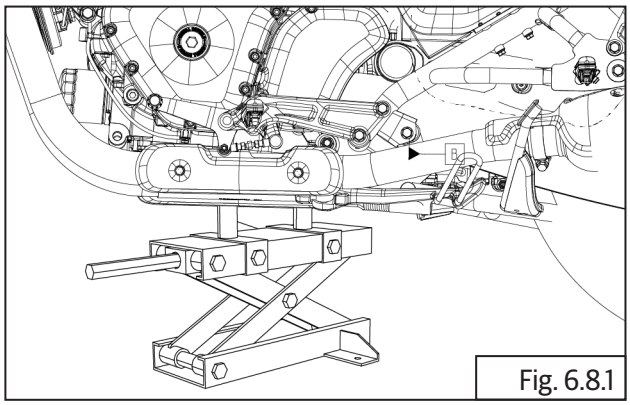

Fig. 6.8.1

Prior Removal

- Remove LHS silencer mounting bolts.

⚠ CAUTION

DO NOT perform any operation on exhaust pipes and silencers soon after the motorcycle is OFF. They can extremely hot and will cause serious injuries. Always wait until the silencer is completely cooled down.

- Loosen and remove Hex head flange bolts with washers and rubber bush **(a)** from rear end and front end of LHS silencer mounting bracket.

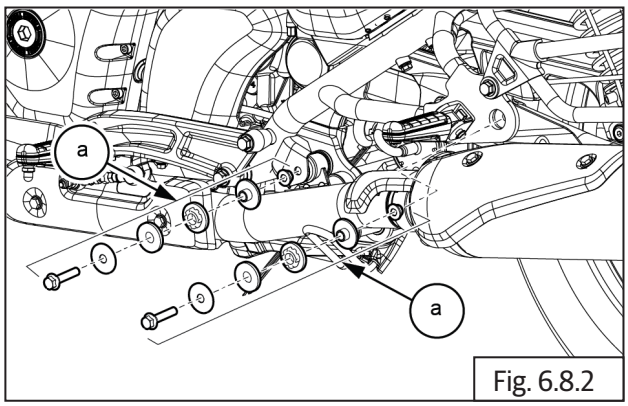

Fig. 6.8.2

	12 mm Double end spanner

- Loosen and remove Hex axle nut **(M16) (b)** from RH and hold other side LH with tommy bar **(a)**.

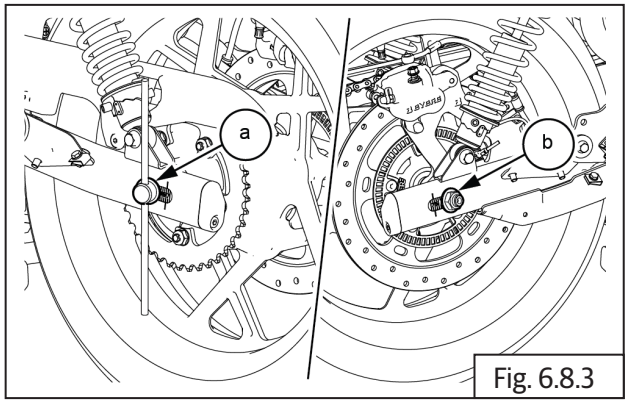

Fig. 6.8.3

	24 mm Ring spanner and Tommy bar

- Remove washer **(a)** from spindle on swing arm RH.

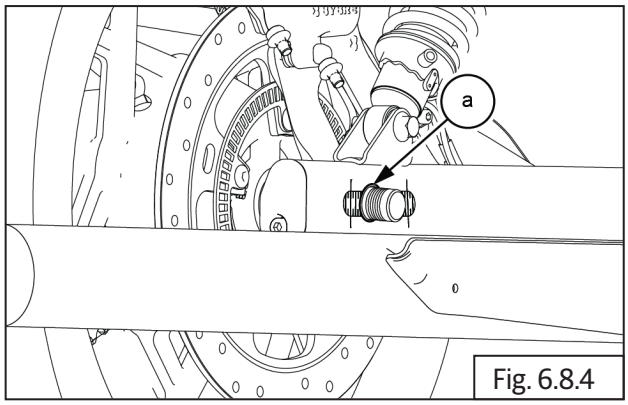

Fig. 6.8.4

- Loosen the chain adjuster bolt LH **(a) (M8)** and RH **(b)** from swing arm.

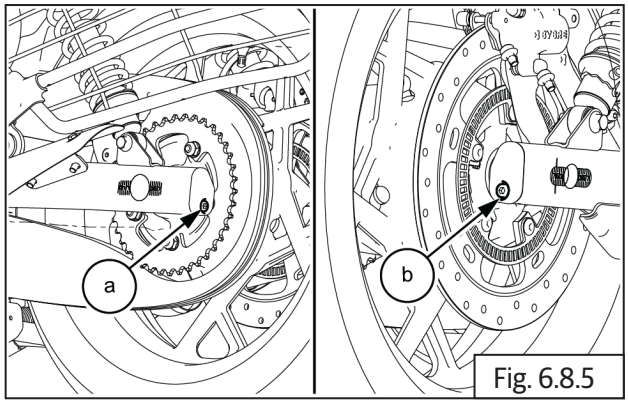

Fig. 6.8.5

	6 mm Allen Key

- Gently tap spindle **(a)** from RH to pull out from LHS.
- Remove spindle **(a)** from rear wheel LH along with washer .

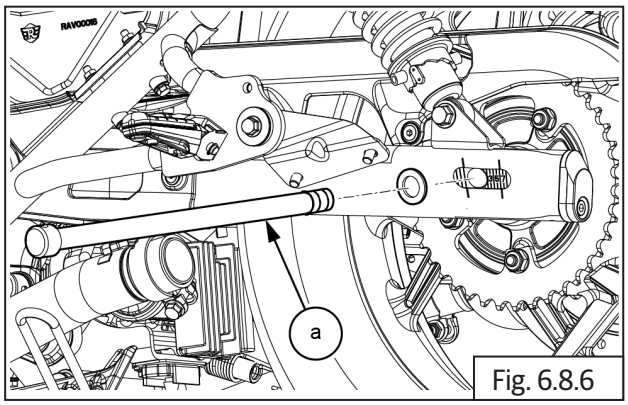

Fig. 6.8.6

	Mallet
	Tommy bar

- Push rear wheel forward to increase chain slack on rear sprocket.

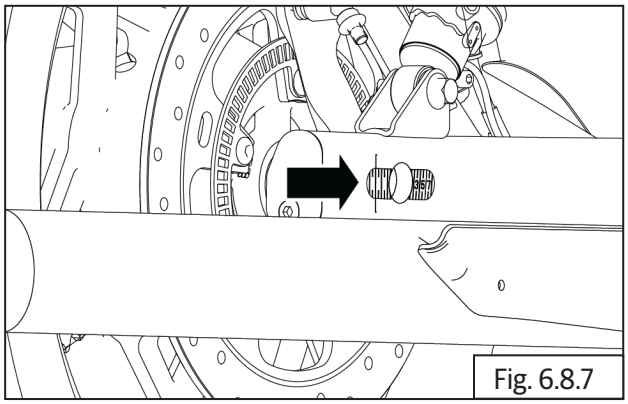
Fig. 6.8.7

- Remove chain adjuster assembly **(a)** end cap **(b)** bolt with washer **(c)** from swing arm RHS.
- Proceed the same step to LHS side.

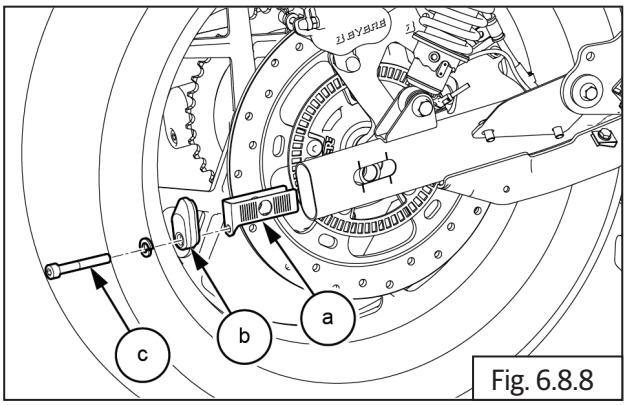

Fig. 6.8.8

- Slide out and remove brake caliper **(a)** from swing arm.

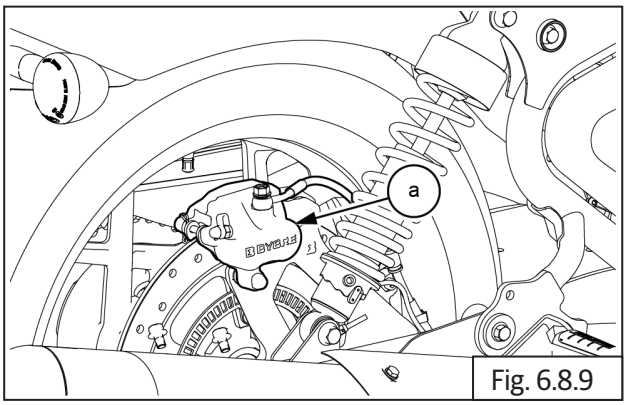

Fig. 6.8.9

⚠ CAUTION

Support the caliper carefully and ensure it does not get damaged.

- Ensure limiter pad is placed between brake pads in caliper assembly.
- Gently release drive chain **(a)** from sprocket **(b)**.

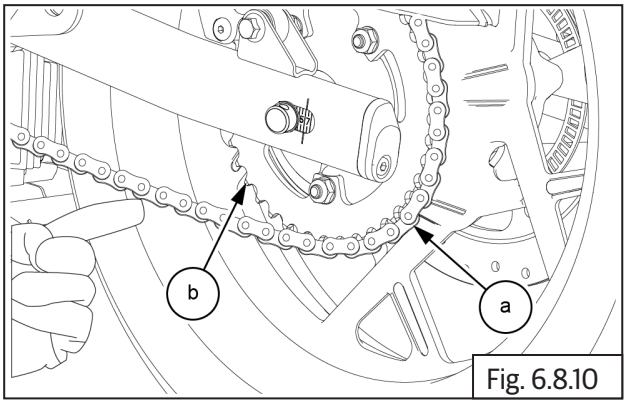

Fig. 6.8.10

- Gently remove spacer LHS and RHS **(a)** from the rear wheel hub .

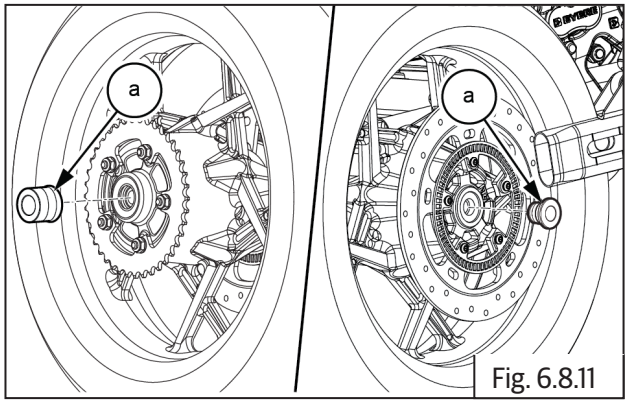

Fig. 6.8.11

- Gently remove rear wheel **(a)** from swing arm.

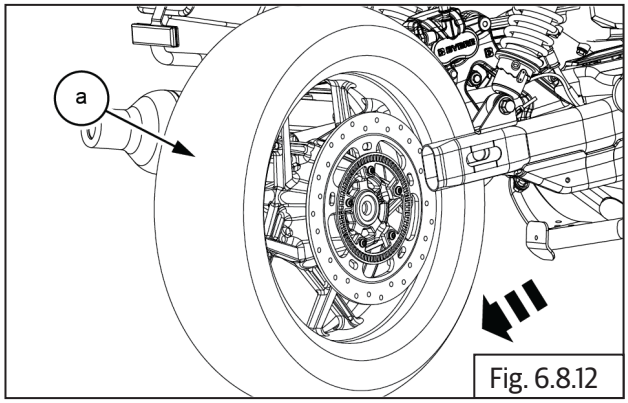

Fig. 6.8.12

6.8.4. Rear Wheel and Brake Disc

- Loosen and remove 5 Nos. Hex flanged socket head bolts **(M10) (a)** to remove chain sprocket **(b)**.

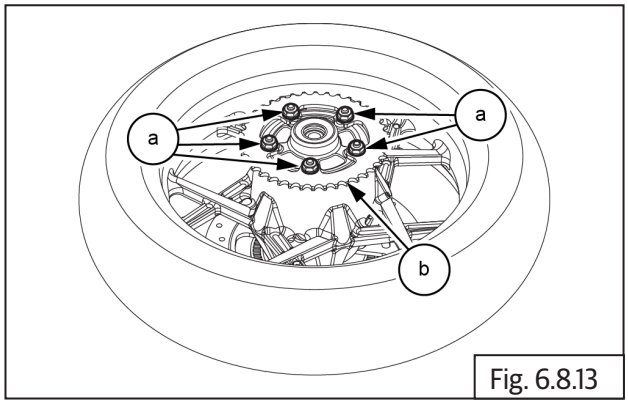

Fig. 6.8.13

	14 mm socket with Ratchet

- Remove chain drive sprocket **(a)** from sprocket carrier **(b)**.

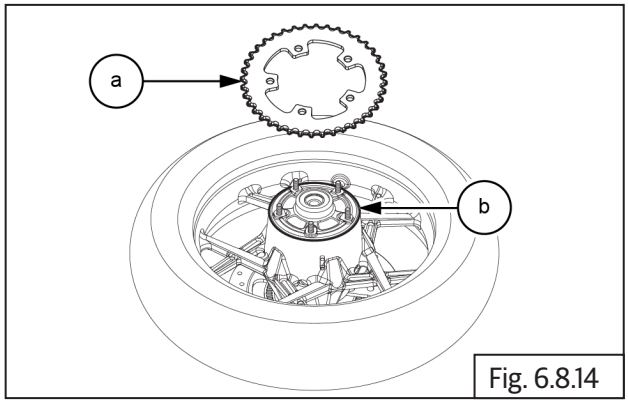

Fig. 6.8.14

- Remove sprocket carrier **(a)** from the rear wheel hub .

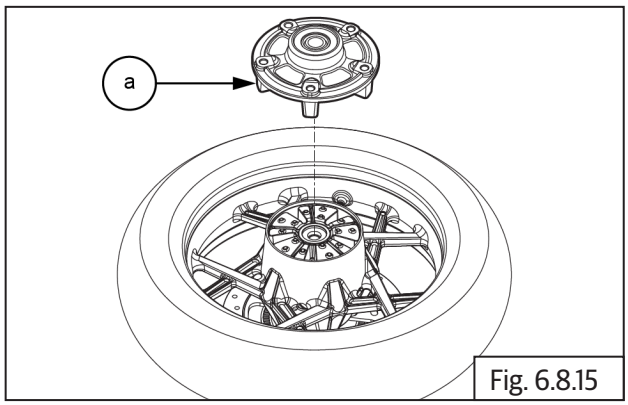

Fig. 6.8.15

- Remove 5 Nos. cush rubbers **(a)** from rear wheel hub LH .

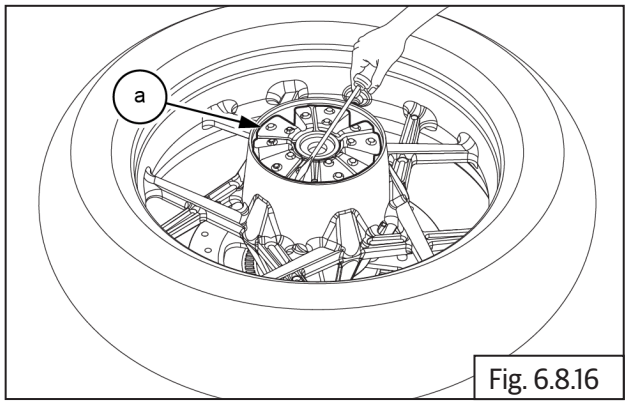

Fig. 6.8.16

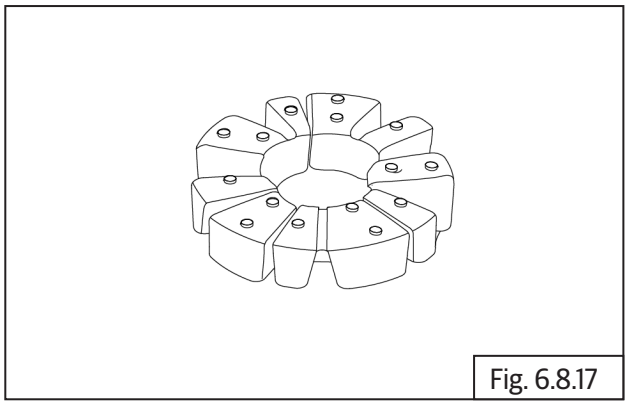

Fig. 6.8.17

	Screw Driver

- Loosen and remove 5 Nos. button head screws **(M6) (a)** from ABS toner.

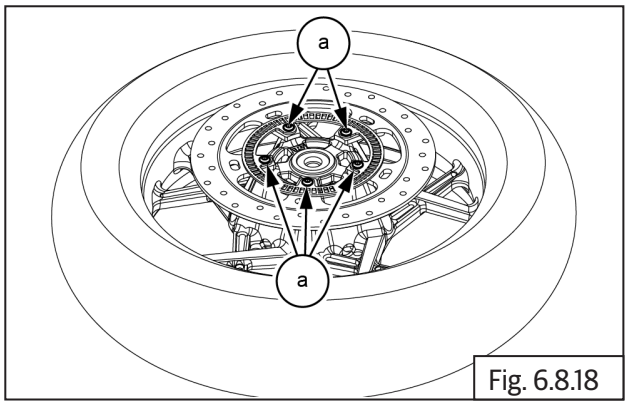

Fig. 6.8.18

	6 mm Allen socket with Ratchet

- Remove ABS toner wheel **(a)** from rear wheel RH.

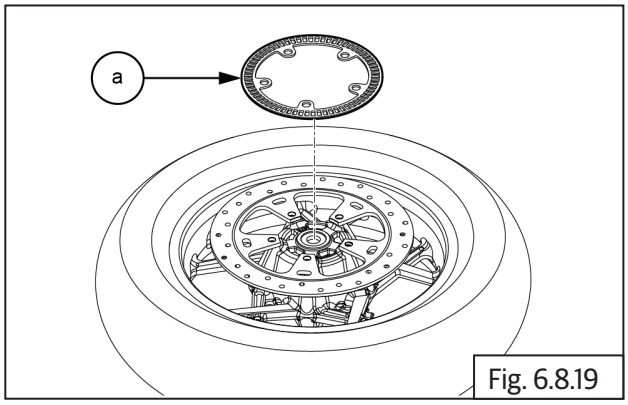

Fig. 6.8.19

- Remove rear brake disc **(a)** from the rear wheel hub RHS.

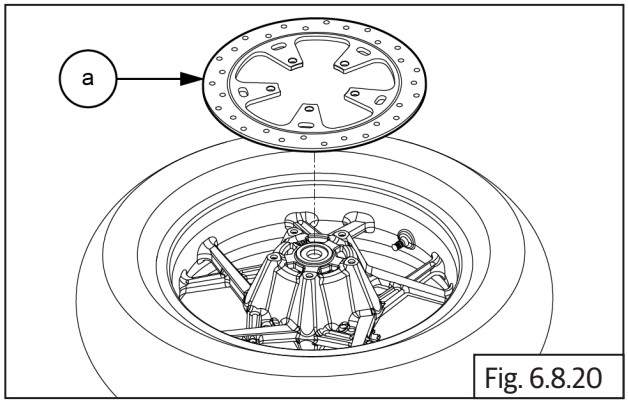

Fig. 6.8.20

- Remove grease seal **(a)**.

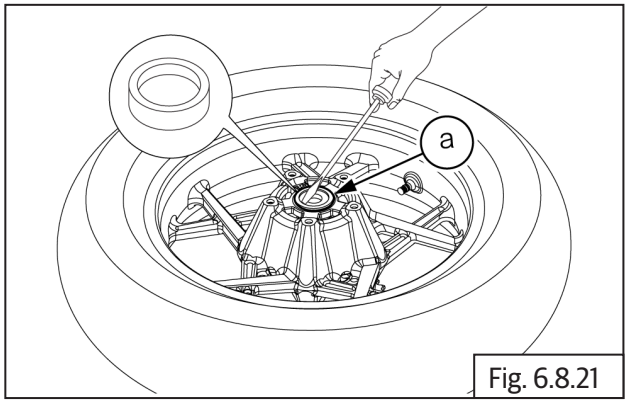

Fig. 6.8.21

	Screw Driver

- Insert a punch into hub from LH side and drive out bearing RH **(a)**.

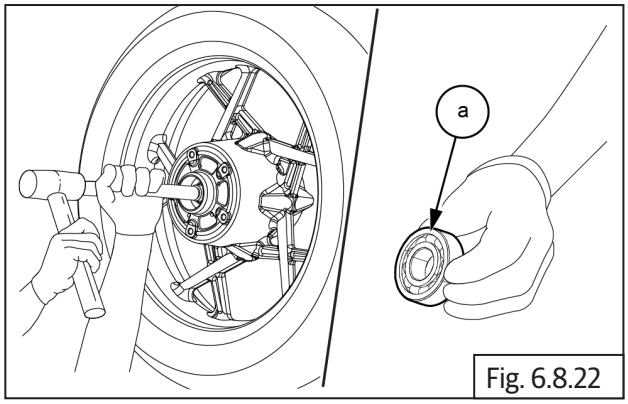

Fig. 6.8.22

	Punch and Mallet

- Remove spacer **(a)** from the rear wheel hub RH.

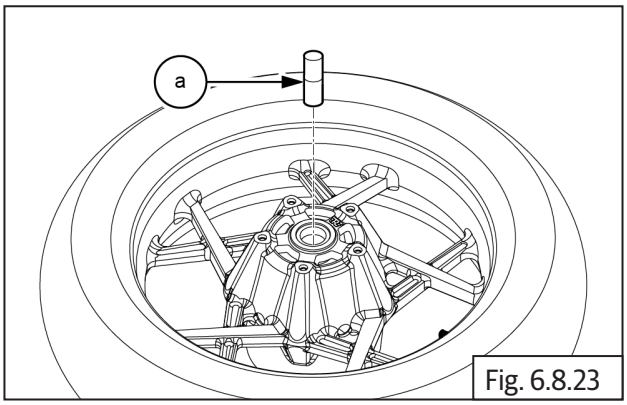

Fig. 6.8.23

- Locate a suitable pointed punch on hole in spacer from RH of hub to remove bearing LH **(a)**.

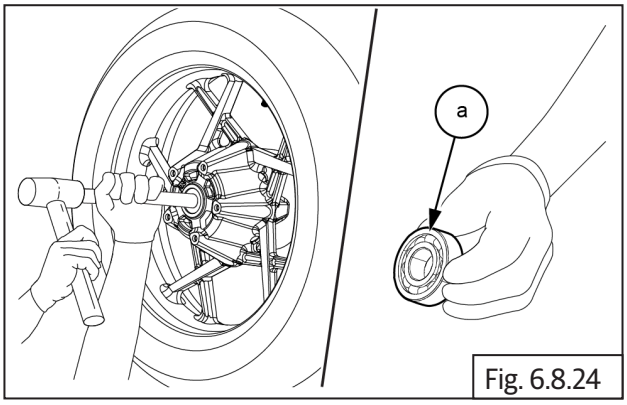

Fig. 6.8.24

	Punch and Mallet

- Gently tap to remove spacer **(a)** from sprocket carrier **(b)**.

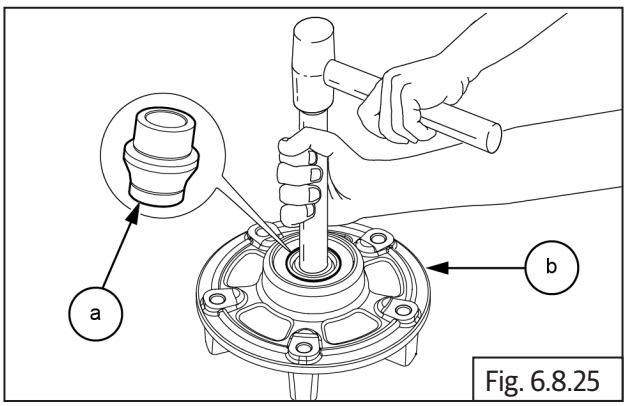

Fig. 6.8.25

	Punch and Mallet

⚠ CAUTION

DO NOT apply excessive force to remove the bearing, spacer as it may cause damage.

- Gently remove grease seal **(a)** from the sprocket carrier **(b)**.

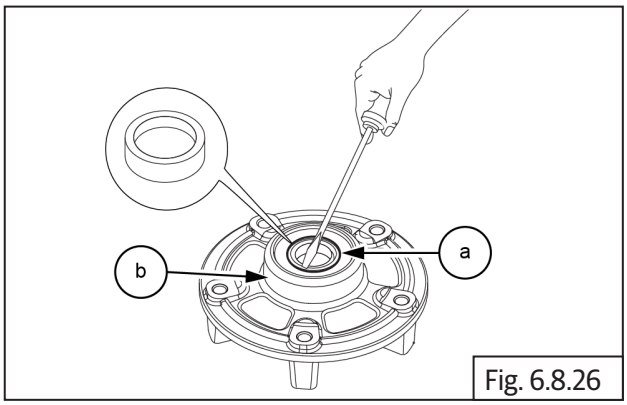

Fig. 6.8.26

	Connector

- Gently remove bearing **(a)** from the sprocket carrier **(b)**.

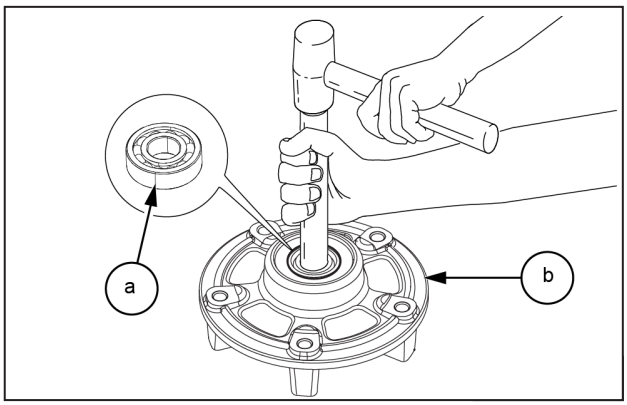

Inspection

6.8.5. Front Wheel and Brake Disc

- Remove the tyre from wheel rim.
- Inspect tyre condition and wheel rim for any damages or bends and replace if out of specifications.

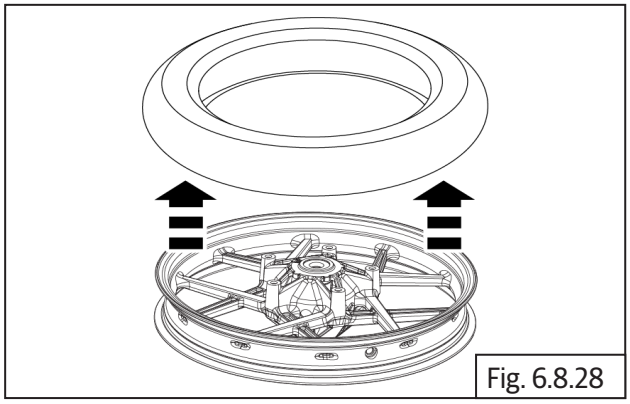

Fig. 6.8.28

- Inspect and replace spindle if it has excess wear, rust or bends.

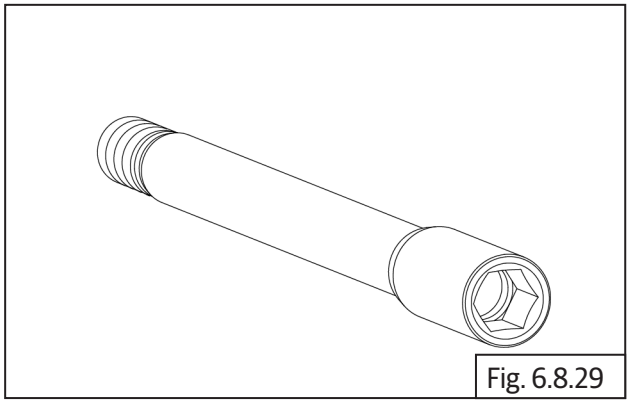

Fig. 6.8.29

- Check tyres for any uneven wear out and the sipes on the center of the tyre is above the TWI index.

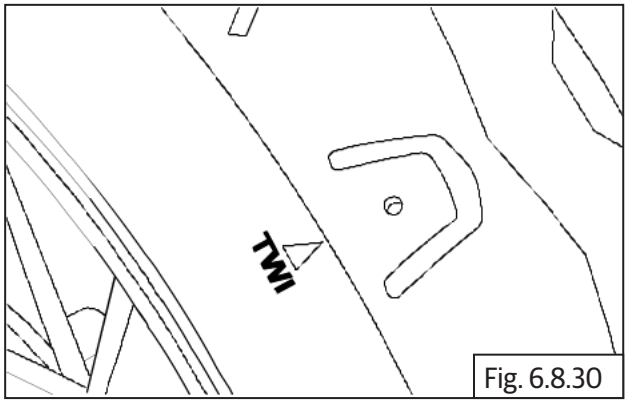

Fig. 6.8.30

	Tyre depth gauge

- Check noise and play on bearing LH and RH.

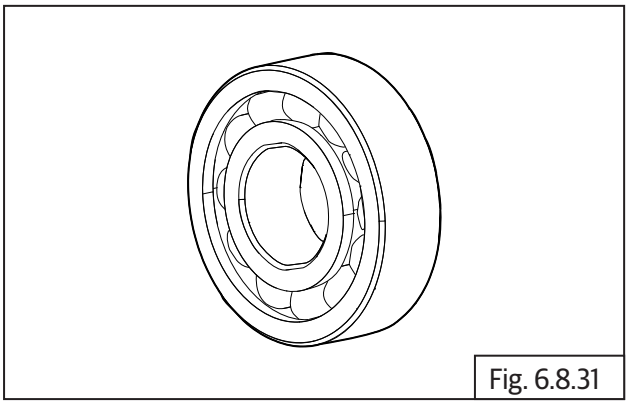

Fig. 6.8.31

- Check and replace wheel spacer if it has excess wear-out.

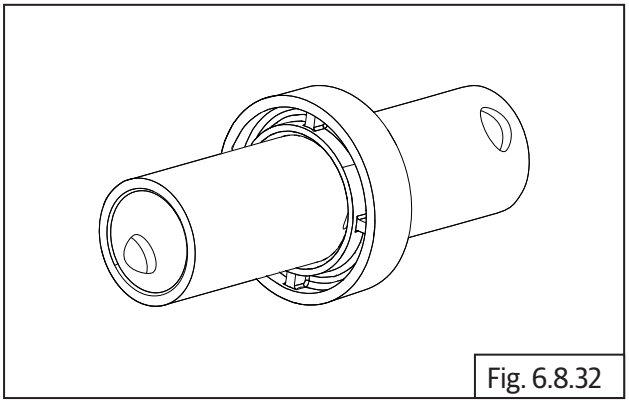

Fig. 6.8.32

- Check if wheel hub assembly is cracked or damaged and replace.
- Check and replace wheel hub bearing seated portion if there is any scoring.

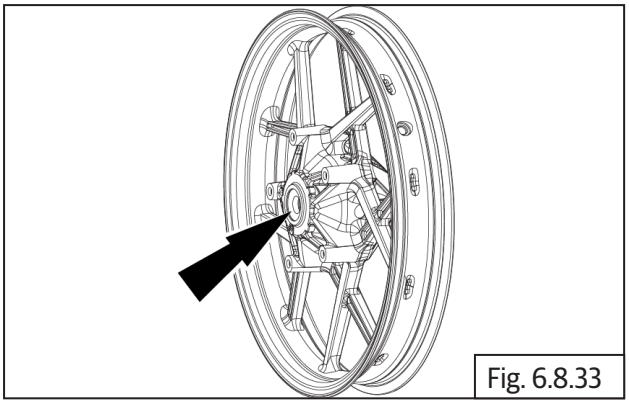

Fig. 6.8.33

- Inspect wheel rim run out / face out and replace if out of specifications.

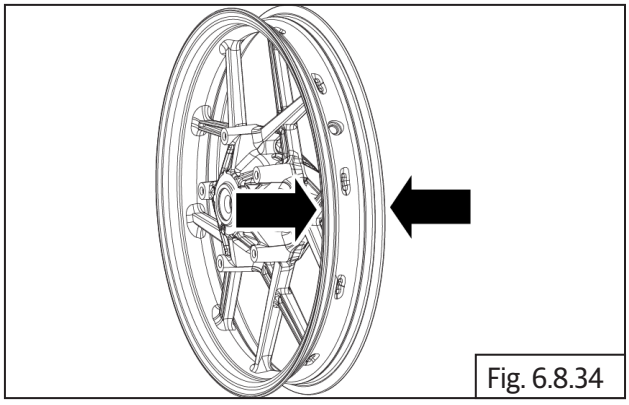

Fig. 6.8.34

Service limit:	1 mm

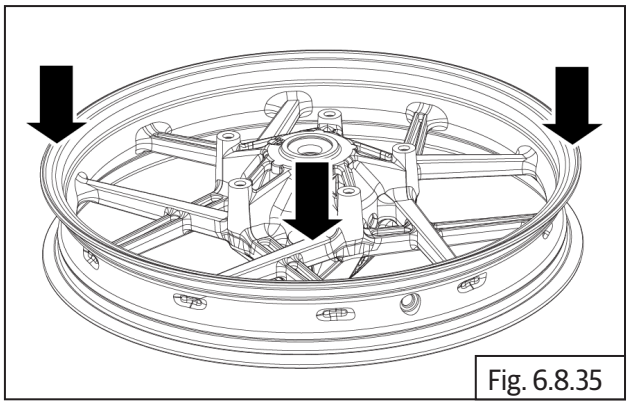

Fig. 6.8.35

- Inspect for rust, deep scoring, any foreign materials, burn marks crack in the mounting location of brake disc.
- Inspect brake disc thickness and run-out. Measure depth at points where scoring is found on the discs and replace if there is excess wear.
- Also measure thickness at the points indicated in the illustration and replace disc if out of specifications.

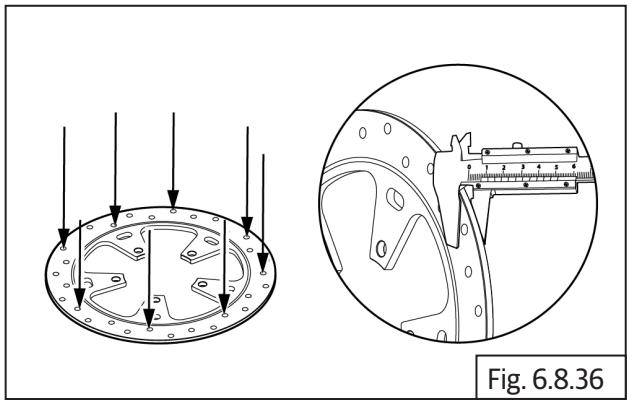

Fig. 6.8.36

	Vernier caliper

Service limit:	0.8 mm

- Place brake disc rotor on a flat surface and inspect warpage. Replace if it is out of specifications.

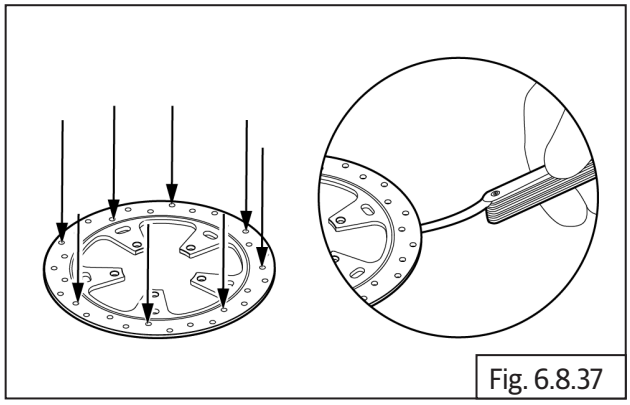

Fig. 6.8.37

	Feeler gauge

Standard:	0.00mm
Service limit:	0.10mm

- Inspect and replace toner wheel plate if there are any damages or bends.

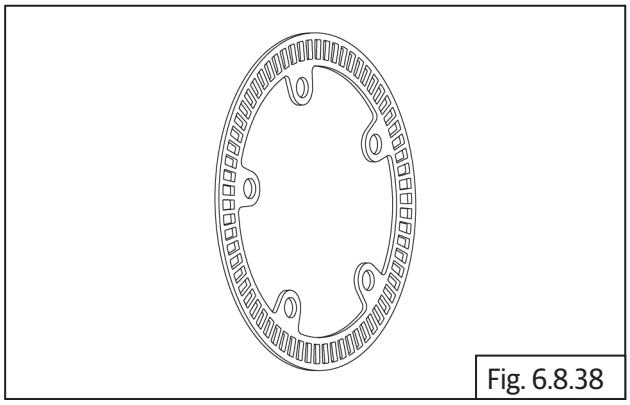

Fig. 6.8.38

- After assembly of brake disc **(a)** into front wheel, insert spindle into rim, fix on wheel balance frame **(c)** and rotate rim to check the disc run-out with dial gauge **(b)**. Ensure run-out is within specified service limits.

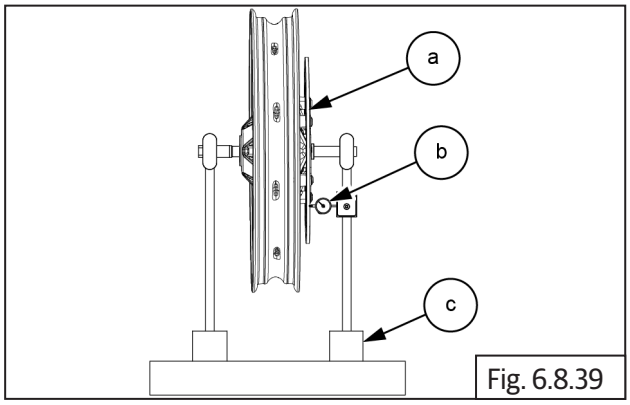

Fig. 6.8.39

Service limit:	0.10 mm

- Similarly check run-out of front and rear wheels.

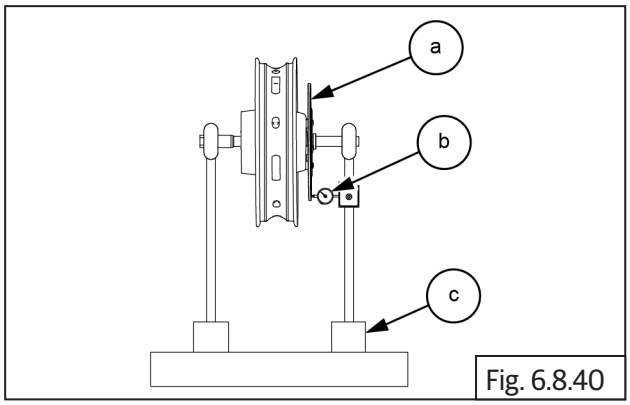

Fig. 6.8.40

	Dial gauge
Service limit:	1 mm

NOTE
• *Run-out of brake disc should be checked only when brake disc is assembled on wheel hub.*

6.8.6. Rear Wheel and Brake Disc

- Remove the tyre from wheel rim.
- Inspect tyre condition and wheel rim for any damages or bends and replace if out of specifications

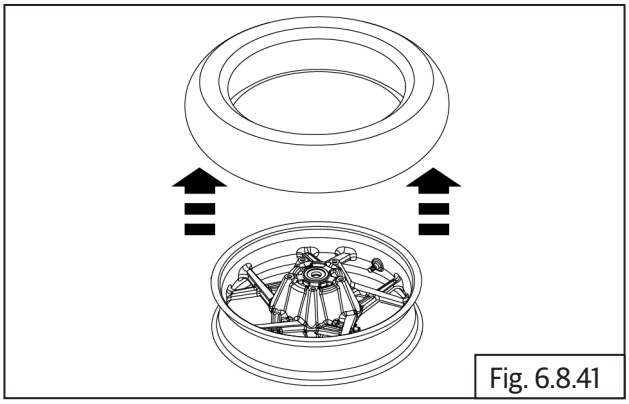

Fig. 6.8.41

- Inspect and replace spindle **(a)** if it has excess wear, rust or bends.

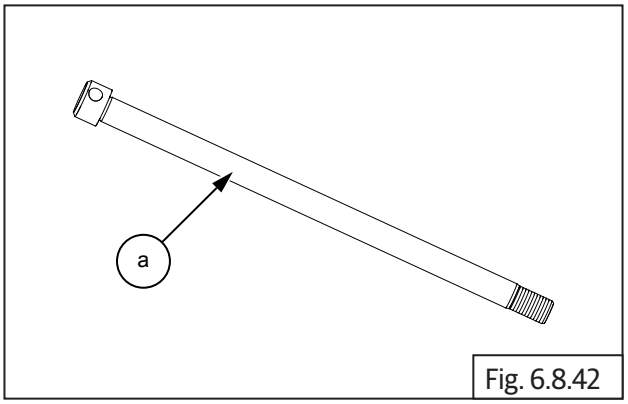

Fig. 6.8.42

- Check noise and play on bearing LH and RH. Replace if necessary.

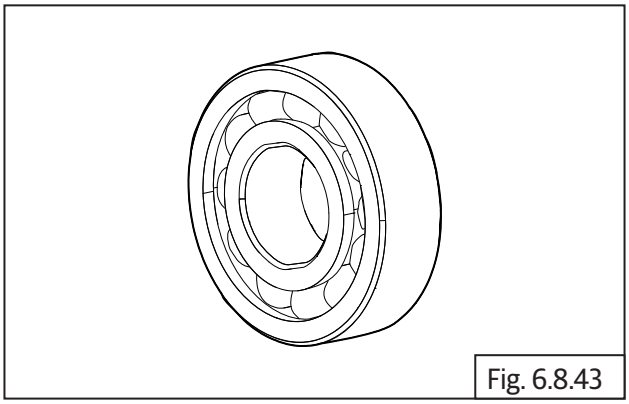

Fig. 6.8.43

- Check and replace spacer if it has excess wear-out.

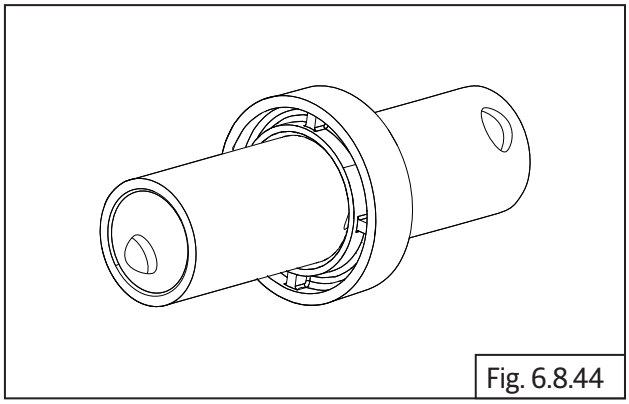

Fig. 6.8.44

- Inspect ABS toner wheel **(a)** for any bends or damages.
- Place ABS toner wheel on a flat surface and check warpage. Replace if out of specifications.

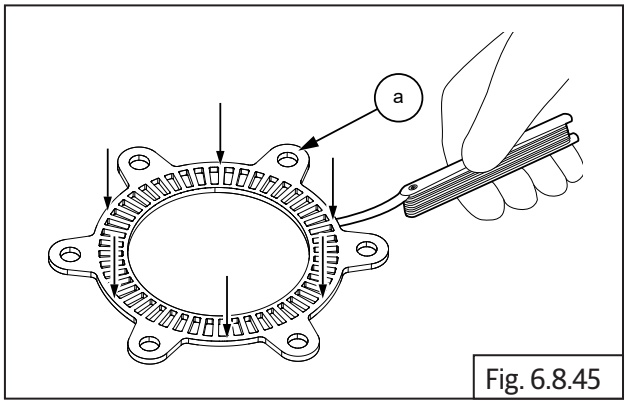

Fig. 6.8.45

	Feeler gauge

Standard:	0.00 mm
Service limit:	0.10 mm

- Inspect for rust, deep scoring, any foreign materials, burn marks crack in the mounting location of brake disc.
- Inspect brake disc thickness and run-out. Measure depth at points where scoring is found on the discs and replace if there is excess wear.
- Also measure thickness at the points indicated in the illustration and replace disc **(a)** if out of specifications.

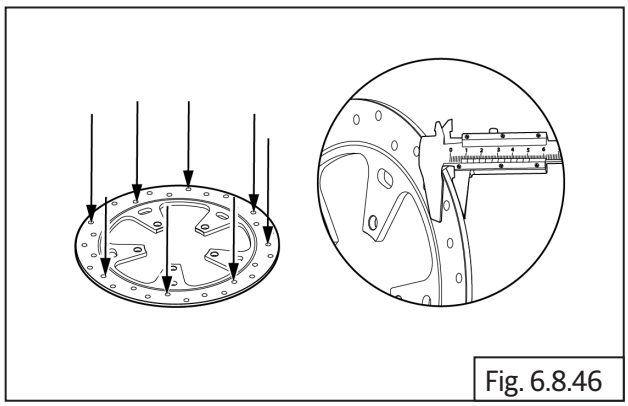

Fig. 6.8.46

	Vernier caliper

Service limit:	0.8 mm

- Place brake disc rear on a flat surface and check warpage. Replace if out of specifications.

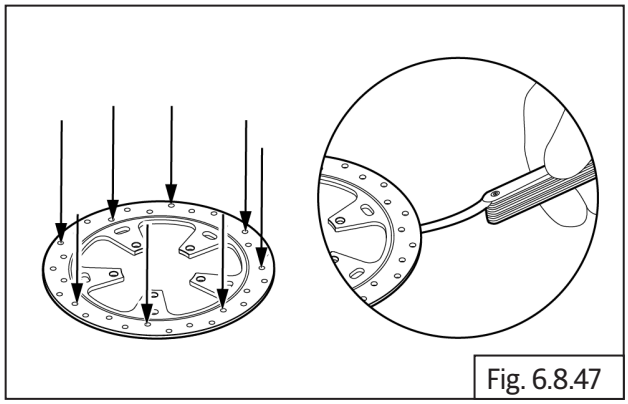

Fig. 6.8.47

	Feeler gauge

Standard:	0.00 mm
Service limit:	0.10 mm

- Inspect wheel hub assembly for any cracks or damages. Replace if out of specifications.
- Inspect if hub bearing seating portion has scoring. Replace if out of specifications.

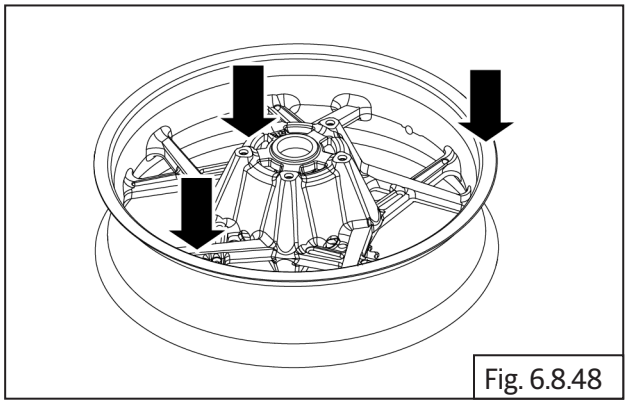
Fig. 6.8.48

- After assembly of brake disc **(a)** into front wheel, insert spindle into rim, fix on wheel balance frame **(c)** and rotate rim to check the disc run-out with dial gauge **(b)**. Ensure run-out is within specified limits.

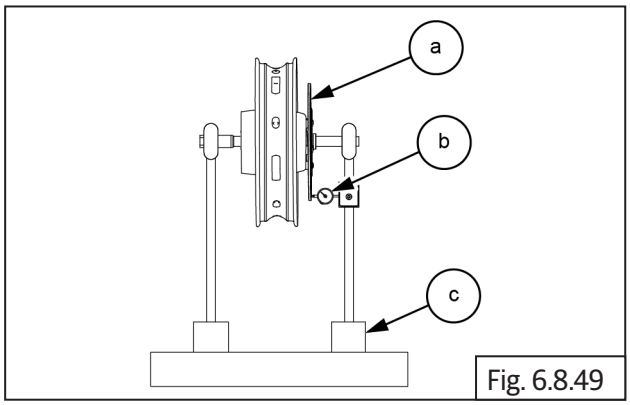

Fig. 6.8.49

⚠ CAUTION

Run-out of brake disc should be checked only when brake disc is assembled on wheel hub.

- Similarly check run out of front and rear wheel.

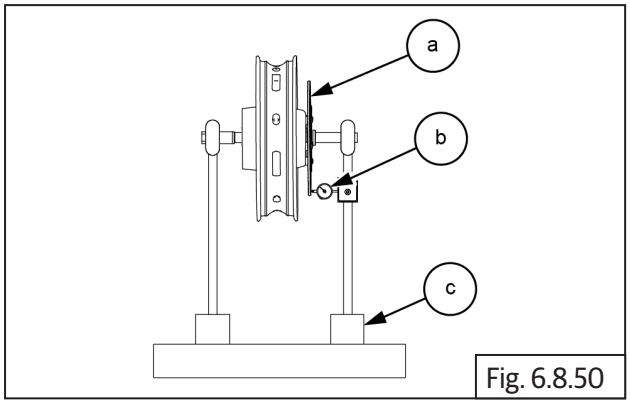

Fig. 6.8.50

	Dial gauge

Service limit:	1 mm

- Check rear wheel hub cushion rubbers for any wear-out or damages.

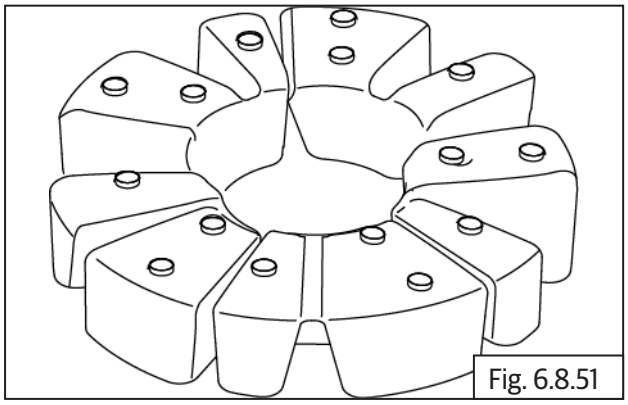
Fig. 6.8.51

- Check tyres for any uneven wear out and the sipes on the center of the tyre is above the TWI index.

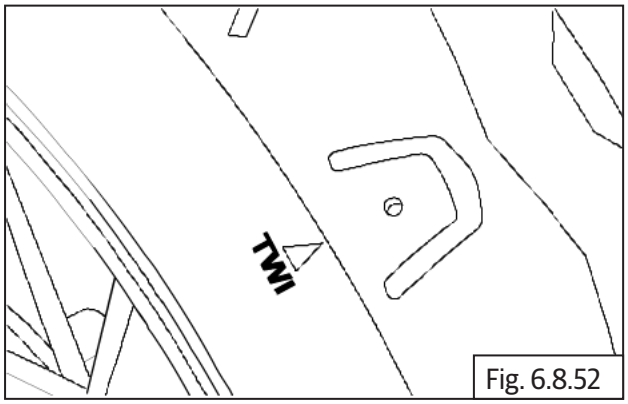

Fig. 6.8.52

	Tyre depth gauge

Assembly

6.8.7. Tyre Assembly On Wheel Disc

- Ensure the tyre is assembled on the wheel rim with the arrow on the tyre side wall is facing towards the front.
- Inflate tyre to the recommended pressure and ensure the tyre is evenly seated in the rim on both LH and RH sides.

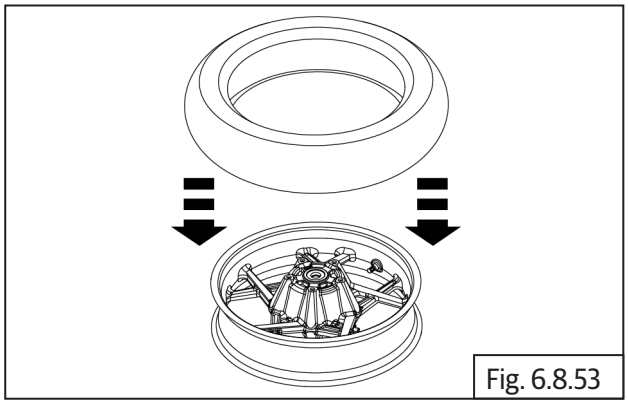

Fig. 6.8.53

6.8.8. Rear Wheel and Brake Disc

- Locate bearing LH **(a)** into rear wheel hub LH. Gently tap on the bearing and ensure it is seated properly on the hub.

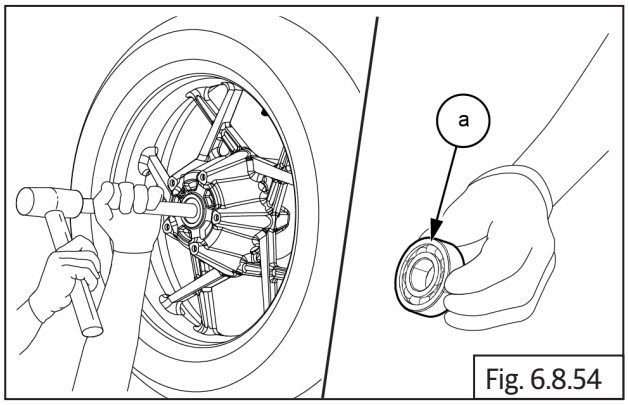

Fig. 6.8.54

	Mallet

- Assemble spacer **(a)** into rear wheel hub RH and Ensure it is properly seated on the bearing surface.

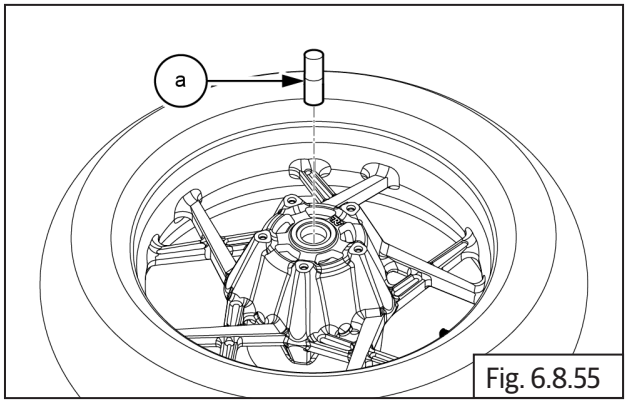

Fig. 6.8.55

- Locate bearing RH **(a)** into rear wheel hub RH. Gently tap on the bearing and ensure it is seated properly on the hub.

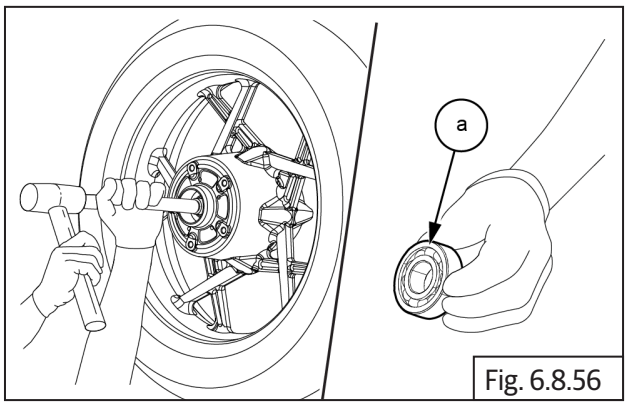

Fig. 6.8.56

- Apply **0.3 grams** of grease on seal to inner and outer diameter surface.
- Assemble grease seal **(a)** into rear wheel hub.

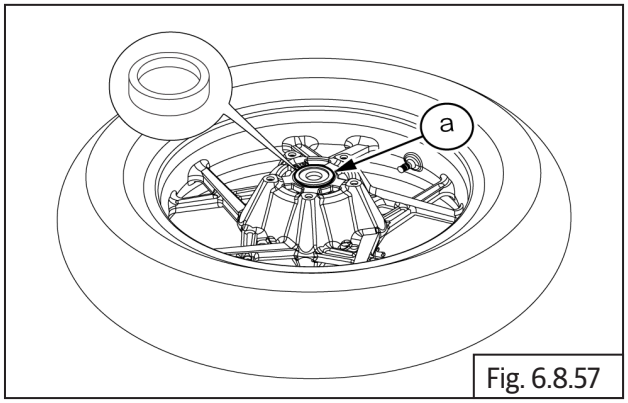

Fig. 6.8.57

	NLGI 2 / Mobil XHP 222
	Seal installer

- Assemble rear brake disc **(a)** into rear wheel hub RH.

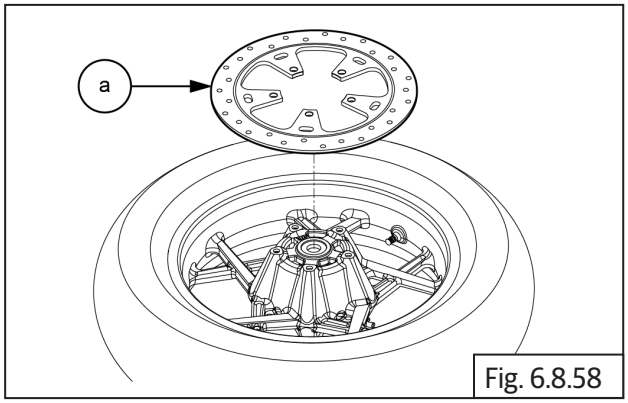

Fig. 6.8.58

- Assemble ABS toner wheel **(a)** into rear brake disc on rear wheel RH.

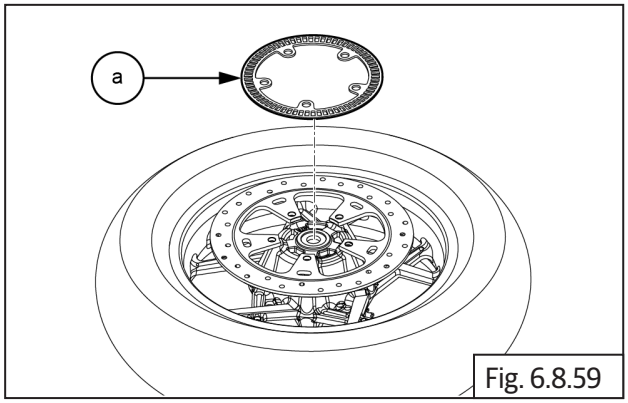

Fig. 6.8.59

- Use recommended sealant on the screws and locate and tighten 5 Nos. Hex head button socket screws **(M6) (a)** into rear wheel disc hub RH.

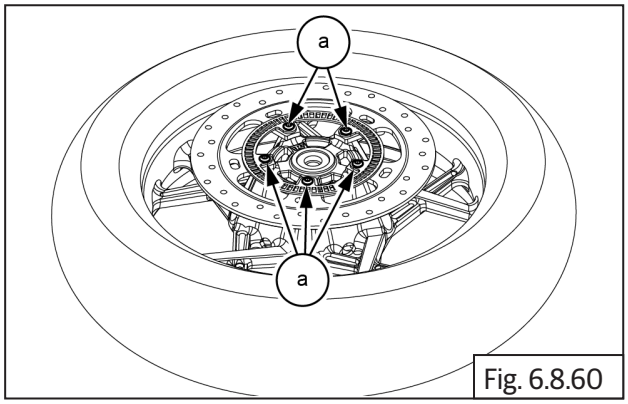

Fig. 6.8.60

	6 mm Allen socket with Ratchet
Torque	25 N-m/2.5 kgf-m

- Clean cushion rubbers seating area and insert 5 Nos. cushion rubbers **(a)** into rear wheel hub LH and gently tap with mallet .

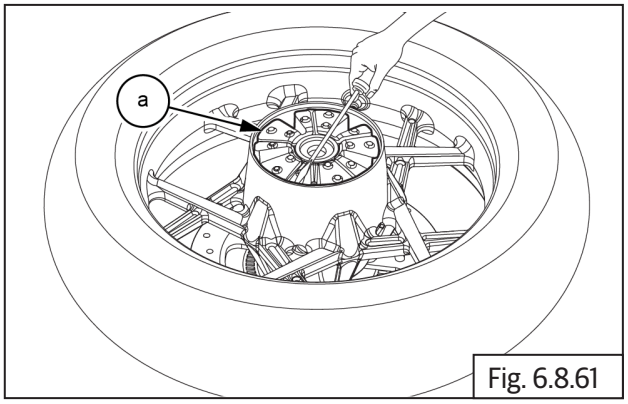

Fig. 6.8.61

	Mallet

- Apply **0.3 grams** of grease on seal to inner and outer diameter surface.
- Assemble grease seal **(a)** into rear wheel hub.

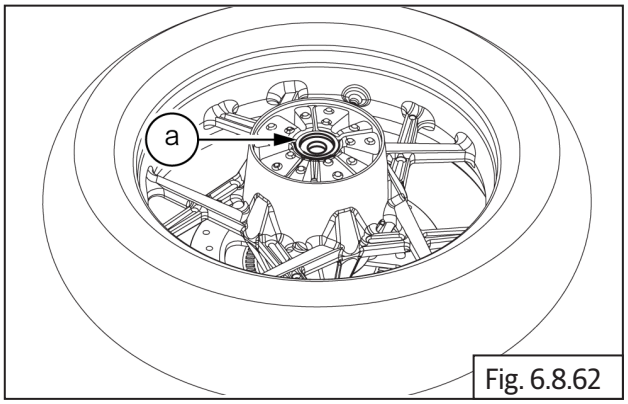

Fig. 6.8.62

	NLGI 2 / Mobil XHP 222

	Seal installer

NOTE
• *Always use new cushion rubbers as they are for one time usage only.*

- Locate bearing **(a)** into sprocket carrier **(b)** and Ensure it is properly seated on the slot.

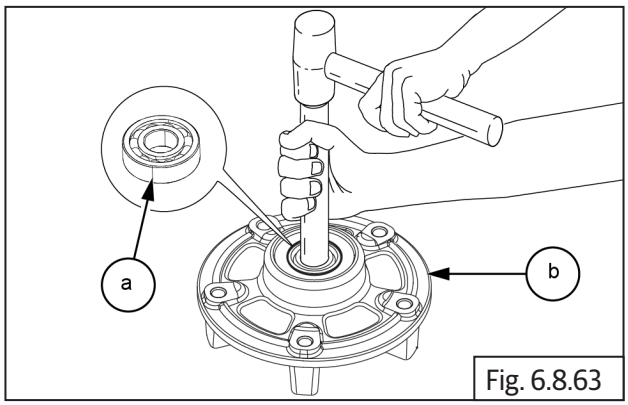

Fig. 6.8.63

- Apply **0.3 grams** of grease on seal to inner and outer diameter surface.
- Assemble grease seal **(a)** into sprocket carrier **(b)**.

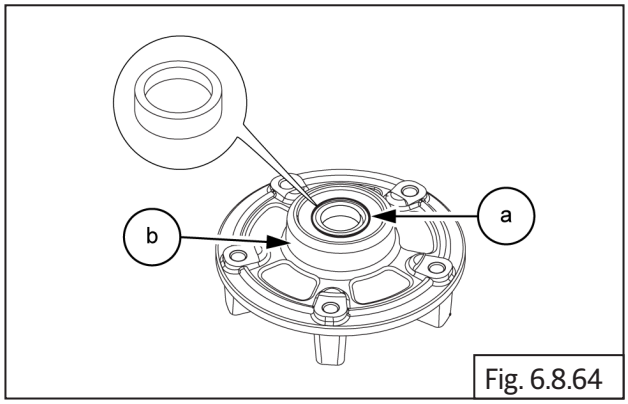

Fig. 6.8.64

	NLGI 2 / Mobil XHP 222

	Seal installer

- Locate and gently tap the spacer **(a)** into sprocket carrier **(b)**.

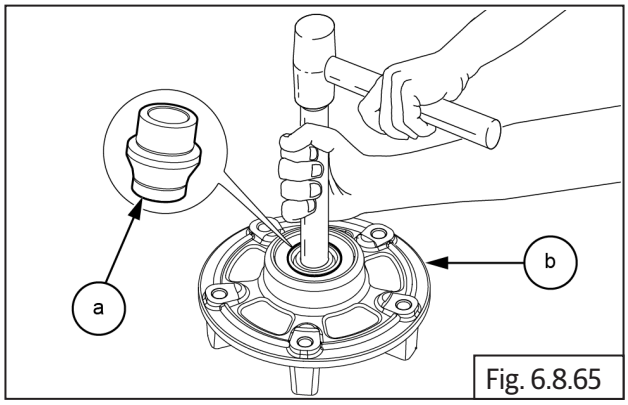

Fig. 6.8.65

	Mallet

- Assemble rear sprocket carrier **(a)** over cushion rubbers into rear wheel hub LH .

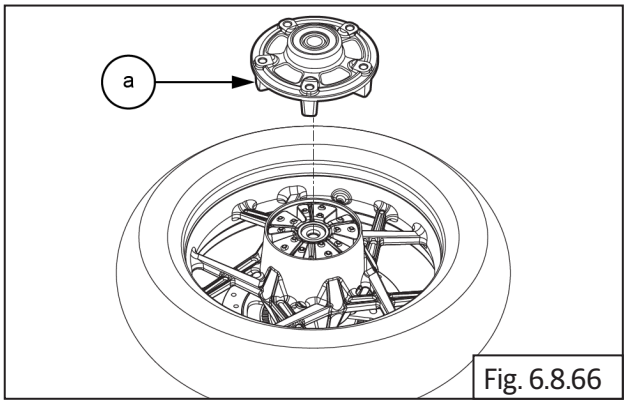

Fig. 6.8.66

- Locate chain drive sprocket **(a)** into sprocket carrier **(b)** on rear wheel hub LH.

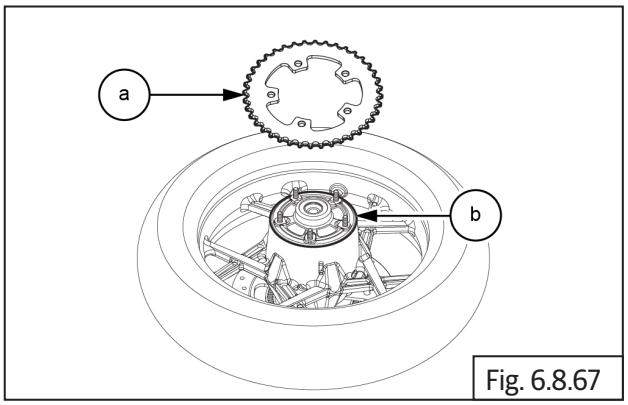

Fig. 6.8.67

- Locate and tighten 6 Nos. Hex flanged socket head bolts **(M10) (a)** into carrier **(b)** on rear wheel LH.

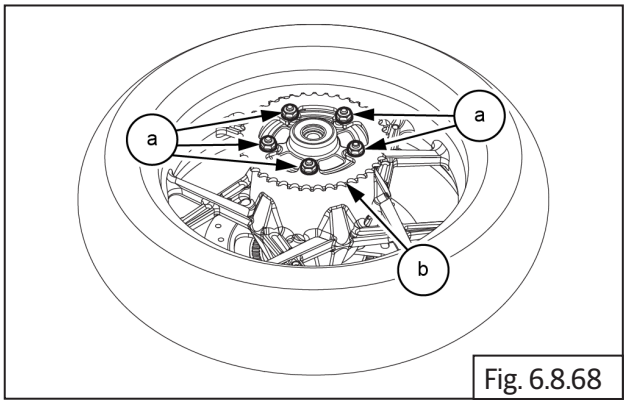

Fig. 6.8.68

	14 mm Hex socket with Ratchet
Torque	25 N-m/2.5 kgf-m

6.8.9. Rear Wheel into Swing Arm

- Gently locate rear wheel **(a)** into swing arm .

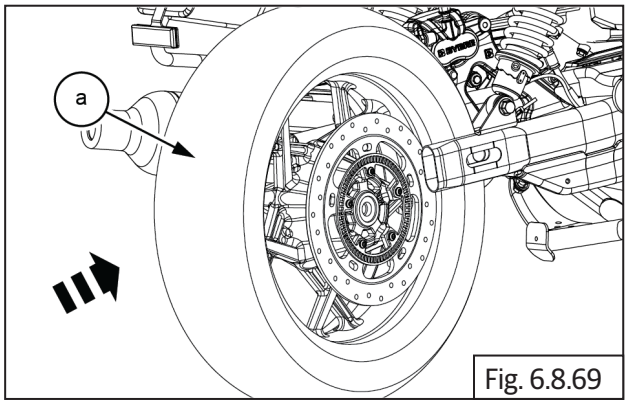

Fig. 6.8.69

- Insert spacer **(a)** into rear wheel hub RHS and LHS **(b)**.

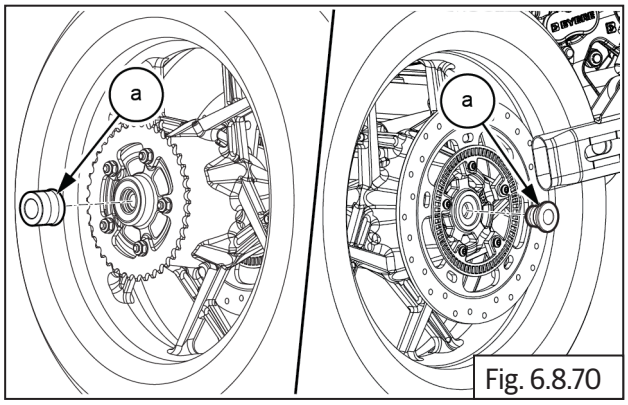

Fig. 6.8.70

- Locate drive chain **(a)** onto sprocket **(b)** and align wheel into swing arm.

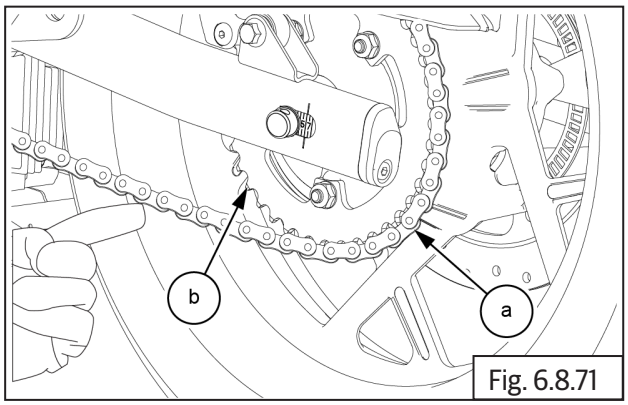

Fig. 6.8.71

- Remove limiter pad and slide brake caliper on to brake disc.
- Assemble chain adjuster assembly **(a)** end cap **(b)** with bolt **(c)** into swing arm RHS and LHS .

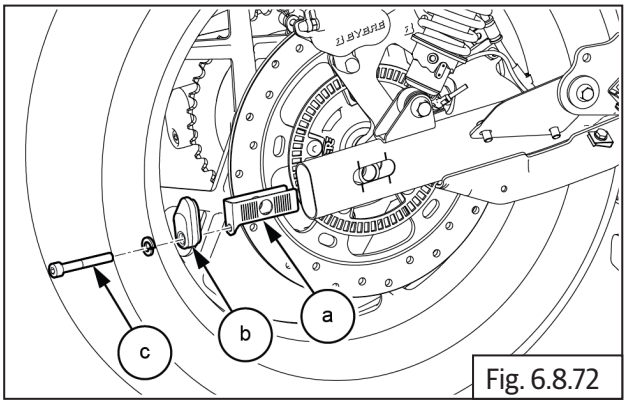

Fig. 6.8.72

- Insert spindle **(a)** with washer into rear wheel hub.

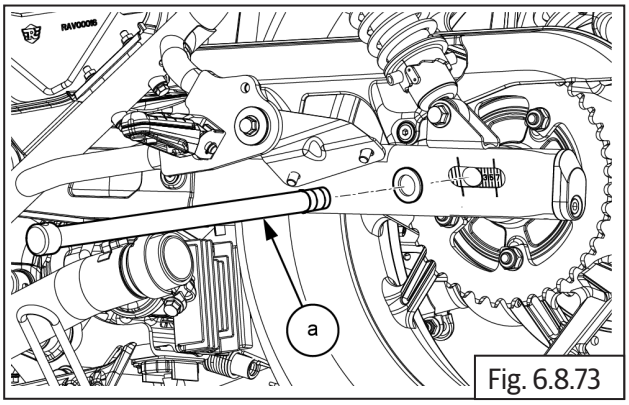

Fig. 6.8.73

	Tommy bar

- Install washer **(a)** into spindle RH.

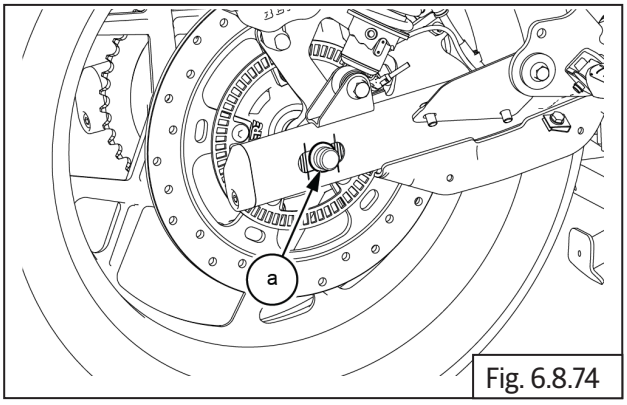

Fig. 6.8.74

- Assemble Hex nut **(M16) (a)** and tighten into swing arm.

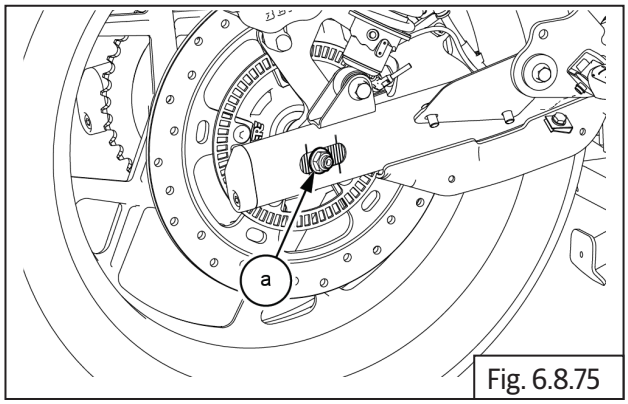

Fig. 6.8.75

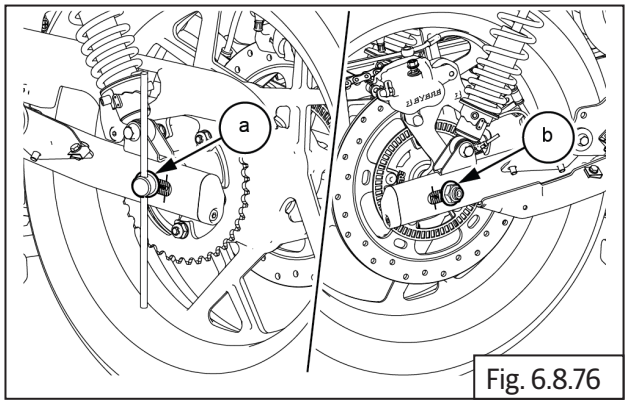

Fig. 6.8.76

	24 mm Socket with Ratchet
Torque	70 N-m/7.0 kgf-m

- After completing rear wheel assembly into motorcycle, ensure chain slack is as per specifications.

6.8.10. Drive Chain Free Play Adjustment

- Rear wheel will be assembled to the vehicle with the spindle nut hand-started but not tightened.
- Vehicle will be placed on the center stand and in neutral gear, ensuring the rear wheel is clear of the ground.

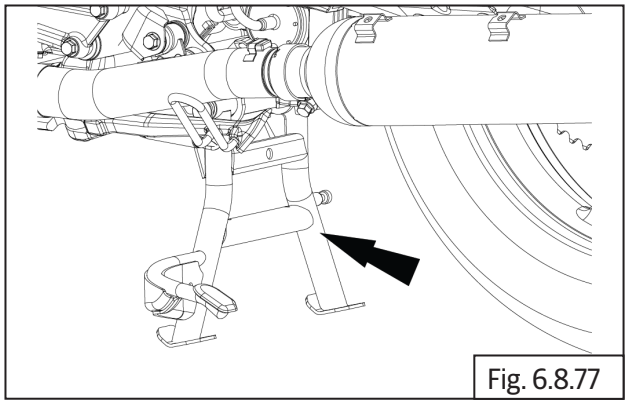
Fig. 6.8.77

- On a point half-way along the chain run between the sprockets the maximum displacement **(shown as A below)** is measured. This value should be in the range of 20-30mm.

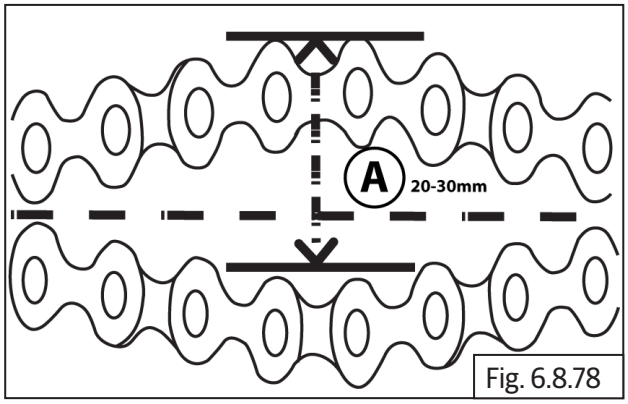

Fig. 6.8.78

- Inspect chain free play at 3 locations using a ruler. Free play for drive chain **(a)** should be between 20 mm to 30 mm.

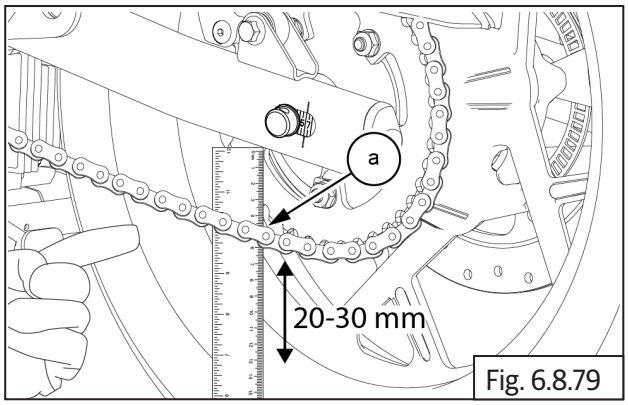

Fig. 6.8.79

- If the free play of the drive chain is not between 20 mm to 30 mm then hold spindle **(a)** on LH using a tommy bar and loosen axle nut **(M16) (b)** on RH.

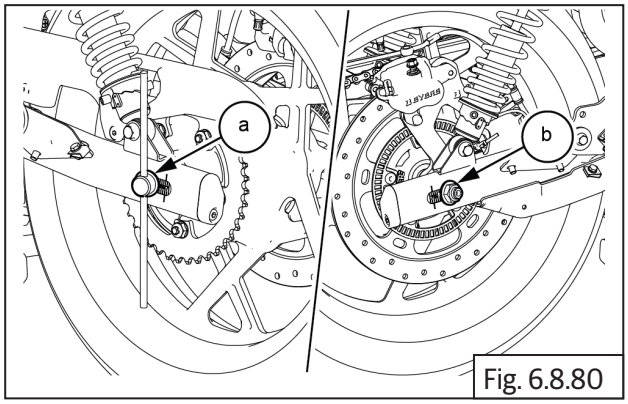

Fig. 6.8.80

	24 mm Ring spanner

- To reduce free play tighten the adjuster bolt to clockwise both LHS **(M8) (a)** and RHS **(M8) (b).**

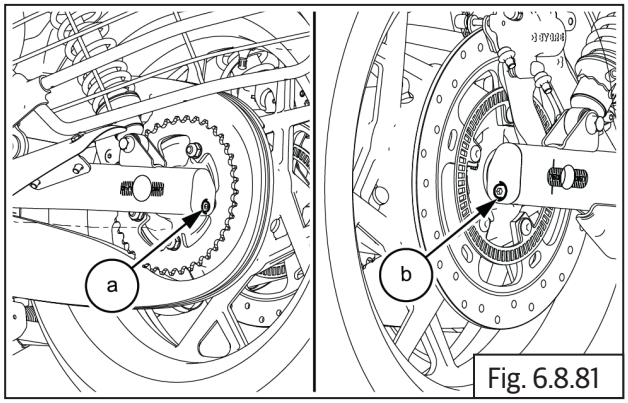

Fig. 6.8.81

	6 mm Allen Key

- Ensure the lines are matched with the lines punched in swing arm on both LH **(a)** & RH **(b)** side for proper wheel alignment.

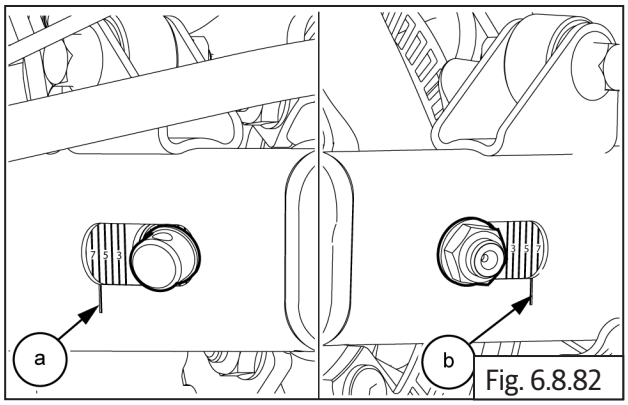

Fig. 6.8.82

- Now measure the drive chain **(a)** free play using ruler and it should be between 20 mm to 30 mm.

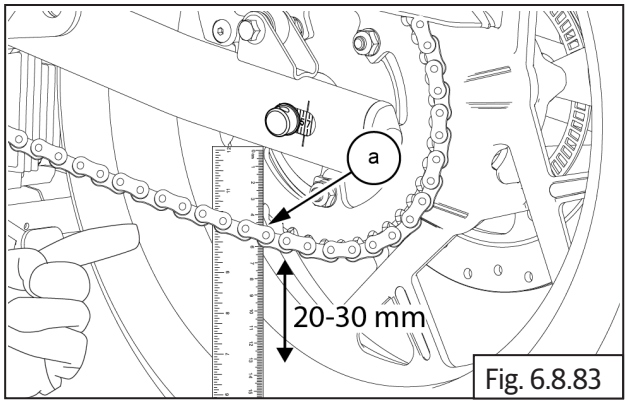

Fig. 6.8.83

⚠ CAUTION

Chain slackness beyond 40 mm will lead to chain slippage or breakage.

- Once chain free play is verified, hold spindle LH with tommy bar **(a)** and tighten the wheel axle nut **(M16) (b)**.

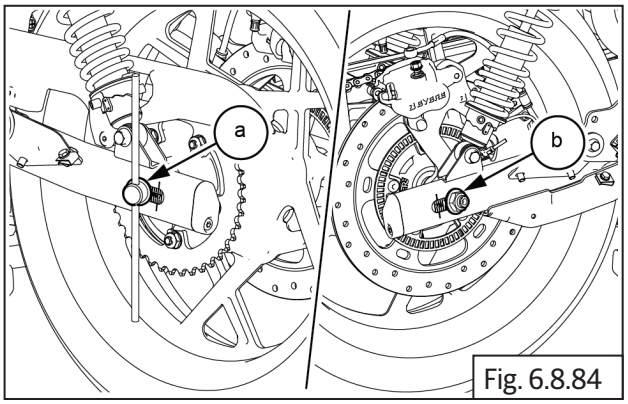

Fig. 6.8.84

	24 mm Ring spanner and Tommy bar
Torque	70 N-m/7.0 kgf-m

⚠ CAUTION

DO NOT perform any operation on exhaust pipes and silencers soon after the motorcycle is OFF. They can extremely hot and will cause serious injuries. Always wait until the silencer is completely cooled down.

- Tighten Hex head flange bolts with washers and rubber bush **(a)** into rear end and front end LHS silencer mounting bracket

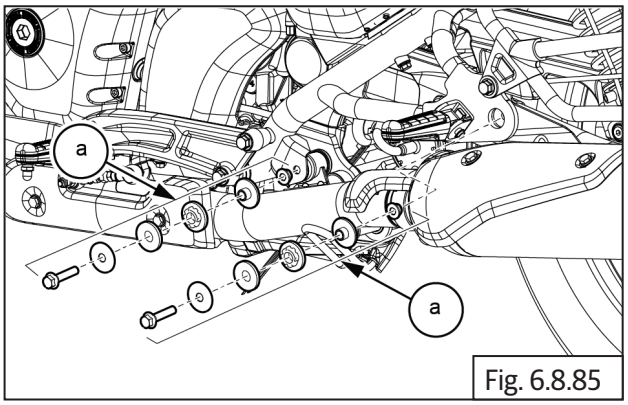

Fig. 6.8.85

	12 mm socket with Ratchet
Torque	25 N-m / 2.5 kgf-m

6.8.11. Tyre Assembly on Wheel Rim

- Ensure the tyre is assembled on the wheel rim with the arrow on the tyre side wall is facing towards the front.
- Inflate tyre to the recommended pressure and ensure the tyre is evenly seated in the rim on both LH and RH sides.

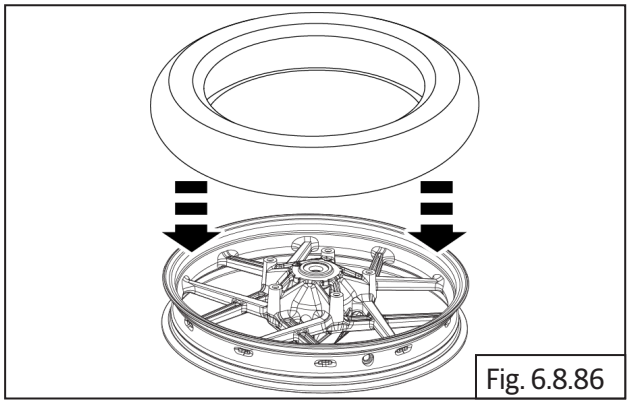

Fig. 6.8.86

6.8.12. Front Wheel and Front Brake Disc

- Locate front brake disc **(a)** on wheel hub with the disc facing up. Ensure mounting holes are correctly aligned.

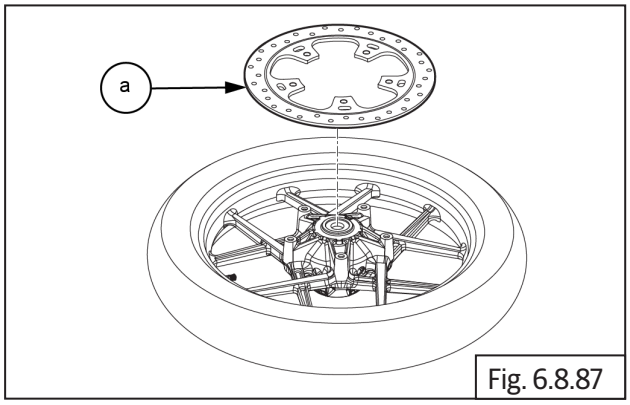

Fig. 6.8.87

- Position toner wheel **(a)** on front disc and ensure mounting holes are correctly aligned.

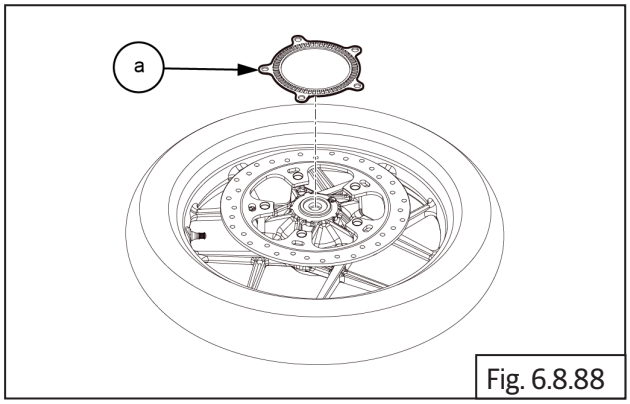

Fig. 6.8.88

- Apply thread sealant on the 5 Nos Hex socket head bolts **(M6) (a)** and allow it to dry for a few minutes.
- Locate the bolts on the mounting holes and tighten toner ring and brake disc to the wheel hub in crisscross patten to specified torque.

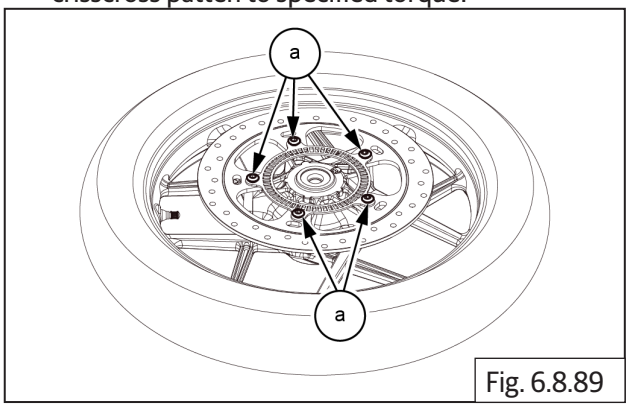

Fig. 6.8.89

	6 mm Allen socket with Ratchet
Torque	25 N-m/2.5 kgf-m

- Insert bearing **(a)** into front wheel hub RH .

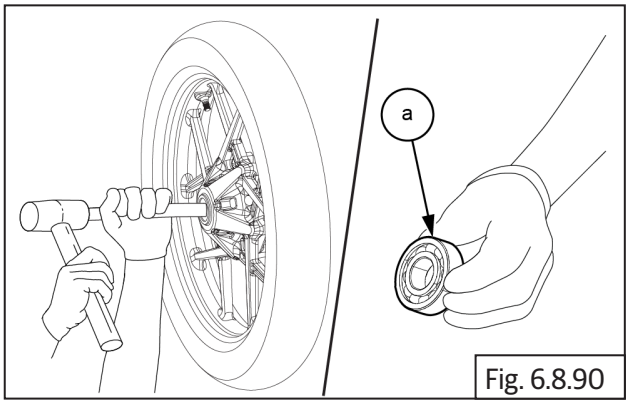

Fig. 6.8.90

- Insert bearing spacer **(a)** from LH side of front hub.

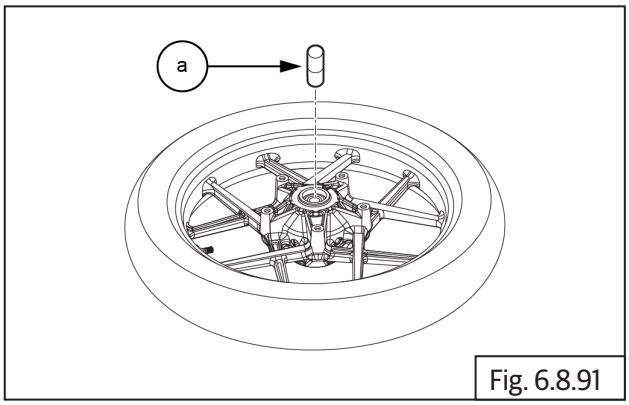

Fig. 6.8.91

- Insert bearing **(a)** into wheel hub LH.

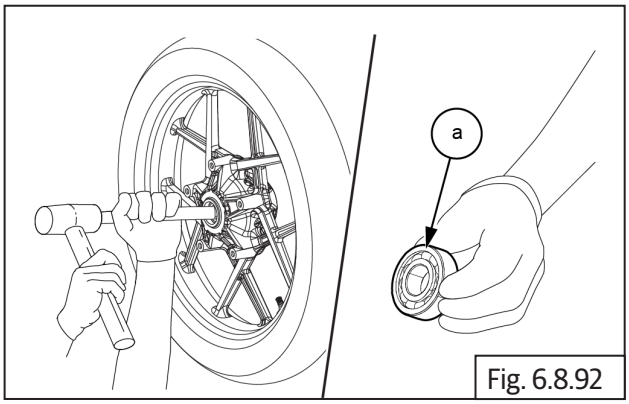

Fig. 6.8.92

- Apply 0.3 grams of grease on seal to inner and outer diameter surface.
- Install grease seal **(a)** into wheel hub LH with seal installer.

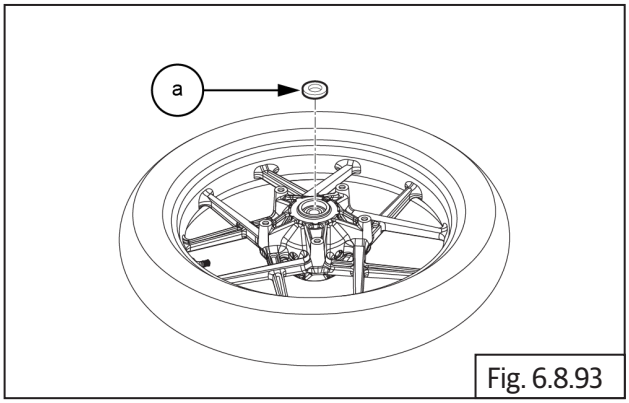

Fig. 6.8.93

	NLGI 2 / Mobil XHP 222
	Seal installer

- Apply **0.3 grams** of grease on seal to inner and outer diameter surface.
- Install grease seal **(a)** into wheel hub RH with seal installer.

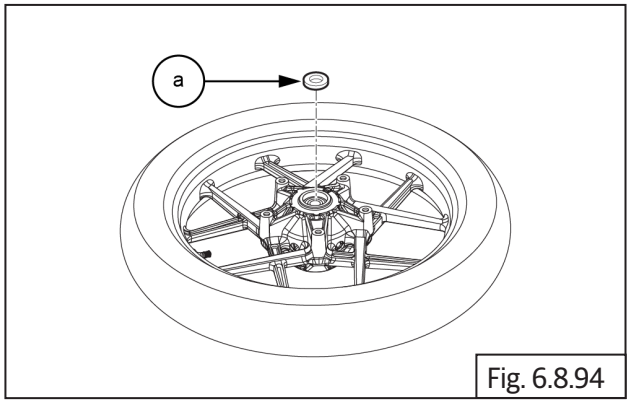

Fig. 6.8.94

	NLGI 2 / Mobil XHP 222
	Seal installer

6.8.13. Front Wheel into Front Fork Assembly

- Carefully align front wheel **(a)** into front fork assembly **(b)**.

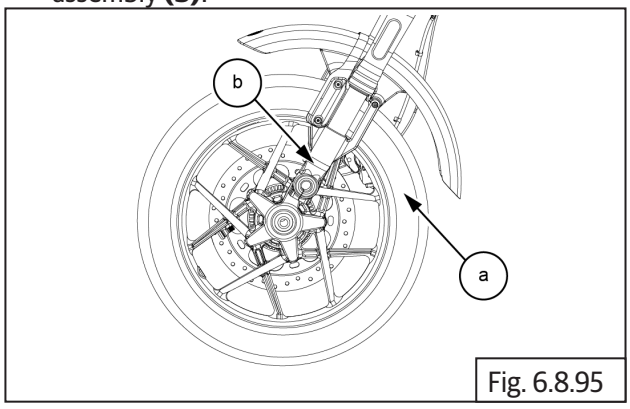

Fig. 6.8.95

- Insert spacer **(a) and (b)** into wheel hub on LH and RH.

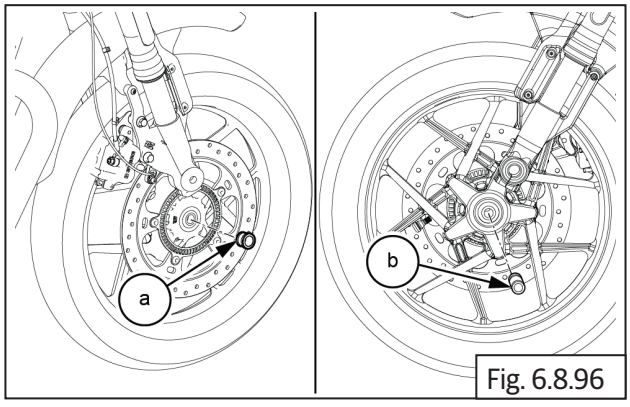

Fig. 6.8.96

- Insert spindle **(a)** into front LH fork assembly and wheel hub.
- Gently tighten spindle **(a)** into front LH fork assembly and wheel hub.

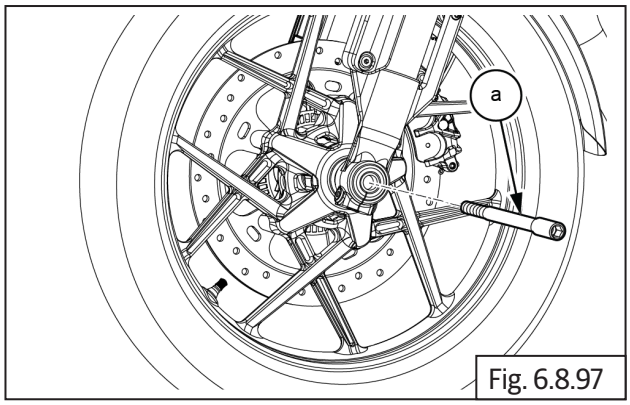

Fig. 6.8.97

	14 mm Socket with Ratchet
Torque	70 N-m / 7.0 kgf-m

- Tighten Hex socket bolt **(M6) (a)** into front fork assembly LH.

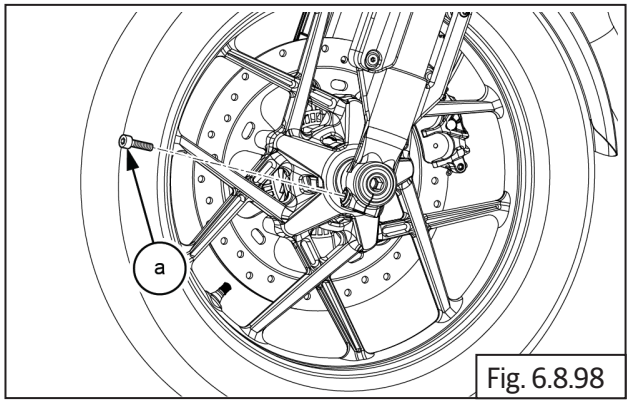

Fig. 6.8.98

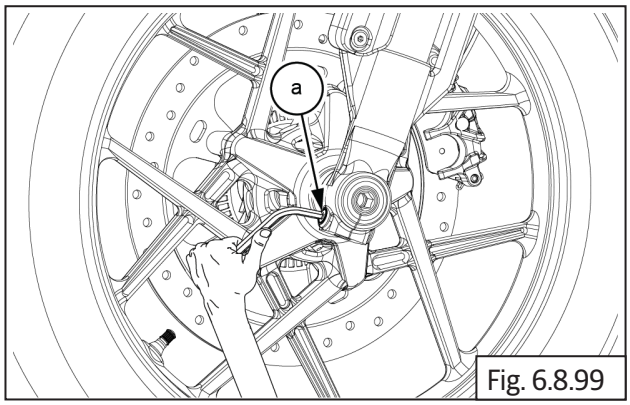

Fig. 6.8.99

	6 mm Allen key
Torque	23N-m / 2.3 kgf-m

Symptom	Possible Cause	Diagnosis	How To Fix	Recommended Specification
1. Tyres Related				

Symptom	Possible Cause	Diagnosis	How To Fix	Recommended Specification
Centre Threads Wear-Out Is High/ Poor Traction/ Unstable Riding	Tyre pressure is more than recommended.	Front and rear tyre pressure is over inflated.	Ensure correct tyre pressures.	**Solo:** **Front tyre**: 41 psi/2.8 kg/cm^2. **Rear tyre:** 36 psi/2.2 kg/cm^2 **With Pillion:** **Front tyre:** 41 psi/2.8 kg/cm^2. **Rear tyre:** 41 psi/2.8 kg/cm^2
Side Threads Wear-Out Is High/Side Wall Has Cracks/ Motorcycle Has Dragging/Unstable Riding	Tyre pressures is less than recommended.	Front and rear tyre pressures under inflated side walls have minute cracks.	Check inner tubes for any puncture/ leaky valve pins ensure correct tyre pressures.	**Solo:** **Front tyre**: 41 psi/2.8 kg/cm^2. **Rear tyre:** 36 psi/2.2 kg/cm^2 **With Pillion:** **Front tyre:** 41 psi/2.8 kg/cm^2. **Rear tyre:** 41 psi/2.8 kg/cm
Rear Tyre Wear-Out On One Side	Improper wheel alignment.	Rear wheel misaligned with respect to front wheel.	Check and correct wheel alignment.	

Symptom	Possible Cause	Diagnosis	How To Fix	Recommended Specification
Tyre/S Wearing Out Is Uneven/ Motorcycle Is Unstable/Wobbling	Internal defect/poor quality tyre.	Tyres found to have bulges/cracks in side wall. Threads are separated from the tyre.	Replace with Royal Enfield recommended tyres.	**Front tyre:** 100/90-19 M/C 57H CEAT ZOOM CRUZ Z F TL (Tubeless tyre) **Rear tyre:** 150/80B16 M/C 71H CEAT ZOOM CRUZ Z F TL (Tubeless tyre)
	Tyre seating on rims is improper.	Tyre bead is uneven at the rim surface.	Remove tyre and reset correctly.	
	Wheel rims have a defect.	Wheel rims are bent/ have excessive run out.	Remove tyre and carry out proper wheel truing.	
	Rims have excessive side play.	Wheel bearings worn-out/excessive play.	Remove and replace wheel bearings.	
2. Wheel Rims Related				
Motorcycle Is Unstable/Wobbling	Tyre seating on rims is improper	Tyre bead is uneven at the rim surface	Remove tyre and reset correctly	
	Wheel rims are out of trueness	Wheel rims are bent/ have excessive run out	Remove tyre and true the wheel rim correctly	
	Wheel rims have a crack/heavy damage	Wheel rims are cracked/damaged due to impact	Replace with royal enfield genuine wheel rims	
3. Others				
	Wheels have excessive axial/side play	Wheel bearings are worn-out	Remove bearing and replace	
	Hubs Front/rear are cracked/damaged	Wheel Hubs are damaged due to impact	Replace with Royal Enfield genuine hubs	

NOTE

- *The trouble shooting given in this section is only related to the issues with wheels. For complaints related to other issues such as poor suspension action/handling/unstable ride please refer to suspension chapter.*

SUSPENSION

CONTENTS PAGE

6.9 Suspension 473

Dismantling 473

6.9.1. Steering Stem Assembly from Frame Head Tube 473

6.9.2. Ball Bearing from Frame top Head Tube 475

6.9.3. Bottom Roller Bearing from Steering Stem 477

6.9.4. Shock absorber 479

6.9.5. Sub Frame 480

6.9.6. Swing arm 480

Inspection 483

Steering Stem 483

Shock absorber 483

Swing arm 483

Top Yoke 483

Assembly 484

6.9.7. Swing arm 484

6.9.8. Sub frame 487

6.9.9. Shock absorber 488

6.9.10. Bottom Roller Bearing into Steering Stem 488

6.9.11. Ball Bearing into Frame top and bottom Head Tube 489

6.9.12. Steering Stem Assembly into Frame Head Tube 491

6.9.13. Rear Suspension Setting 493

Troubleshooting 494

6.9 Suspension

Dismantling

6.9.1. Steering Stem Assembly from Frame Head Tube

⚠ CAUTION

Ensure the motorcycle is upright on a firm and flat surface.

- Position the screw jack directly under the boss of the crank case.
- Carefully use the screw jack to lift the motorcycle until the front wheel is off the ground.
- Make sure the motorcycle is stable and secure before performing any maintenance or repairs.

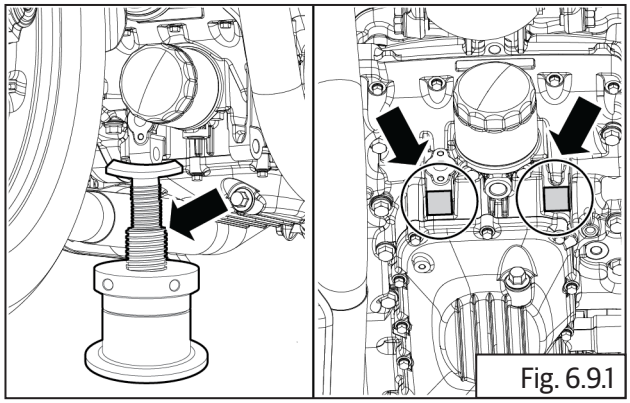

Fig. 6.9.1

- Ensure ignition and stop switch are in off position.
- Remove the Fuel tank.
- Remove the Front wheel.
- Release brake hose and wheel speed sensor wires from the clips.
- Wheel caliper from fork end RH. Support caliper suitably.
- Wheel speed sensor from the fork end RH.
- Remove the Front mudguard.
- Remove the Front number plate.
- Remove the Headlamp assembly and housing.
- Remove the Trafficators.
- Disconnect ignition switch connector.
- Disconnect instrument cluster wiring connector.
- Remove the Instrument cluster from top yoke.
- Remove the Aggregates of Handlebar.
- Remove the Handlebar.
- Remove the Upper Yoke.
- Turn steering stem to extreme left, loosen and remove stem nut **(a)**.

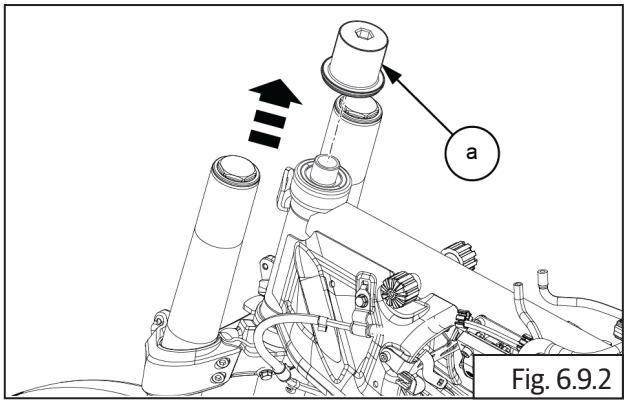

Fig. 6.9.2

	10 mm Allen socket with Ratchet

⚠ CAUTION

Support steering stem from bottom. DO NOT allow the steering stem to drop out of frame head tube.

- Hold steering stem from bottom and remove cover head stock cover **(a)**.

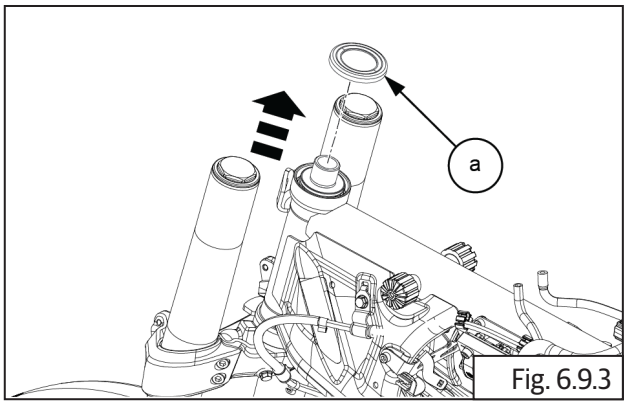

Fig. 6.9.3

- Hold steering stem from bottom and remove seal head stock seal **(a)**.

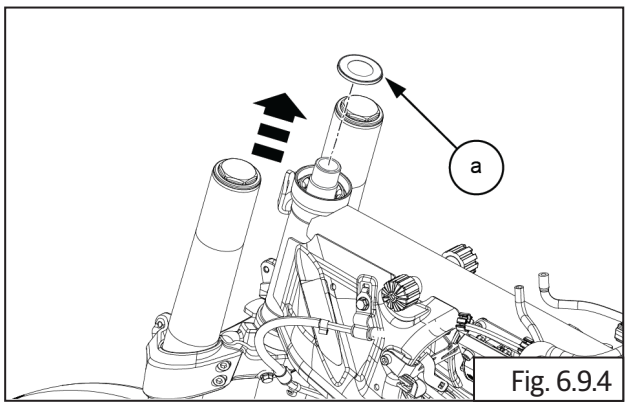

Fig. 6.9.4

- Gently pull out steering stem with fork assembly **(a)** from frame head tube bottom .

⚠ CAUTION

DO NOT tap or use force to remove steering stem from frame head tube.

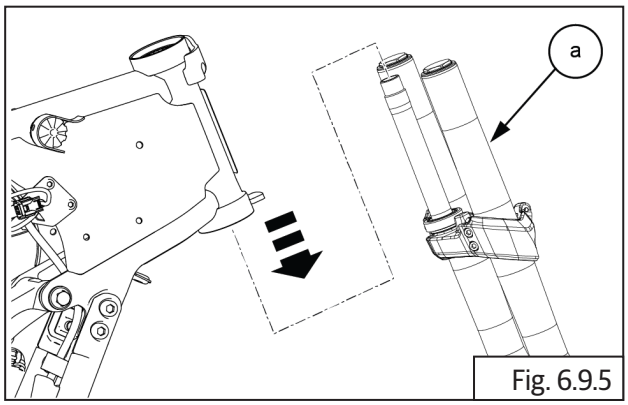

Fig. 6.9.5

- Loosen and remove 2 Nos. cap bolts **(M8) (a)** from LHS lower yoke.

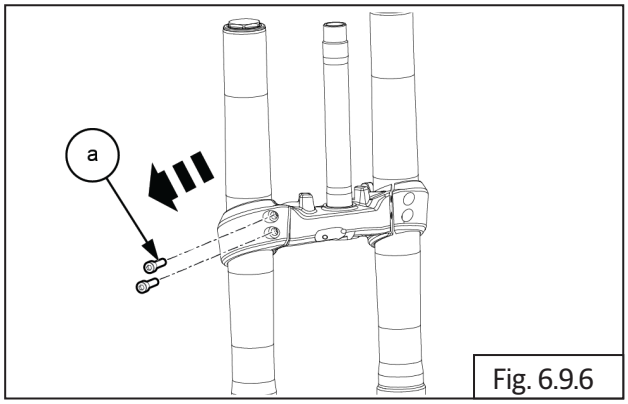

Fig. 6.9.6

	6 mm Allen socket with Ratchet

- Loosen and remove 2 Nos. cap bolts **(M8) (a)** from RHS lower yoke.

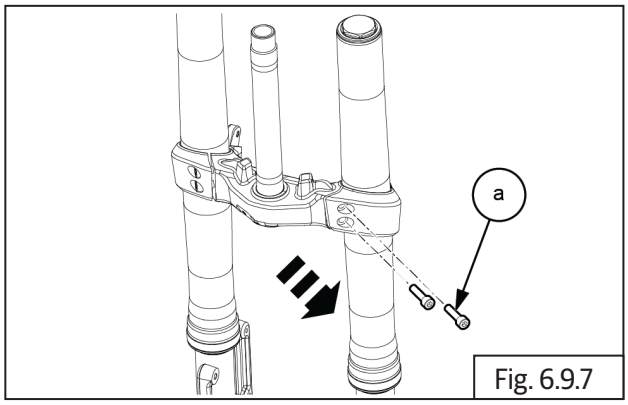

Fig. 6.9.7

	6 mm Allen socket with Ratchet

- Remove lower yoke with stem **(a)** from both fork assembly.

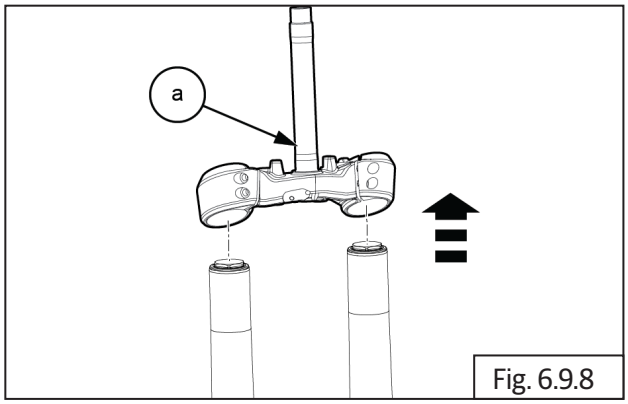

Fig. 6.9.8

6.9.2. Ball Bearing from Frame top Head Tube

- Gently pull out bearing **(a)** from frame top head tube top.

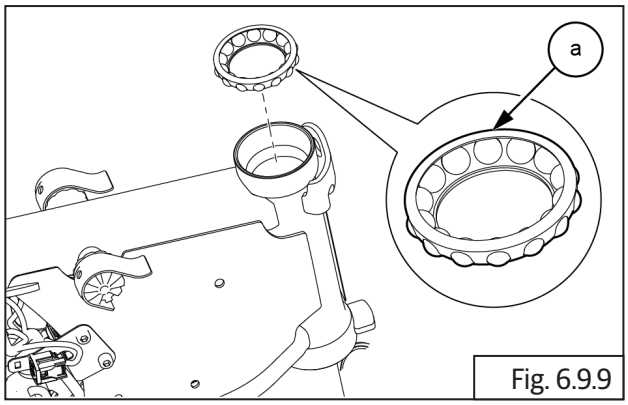

Fig. 6.9.9

6.9.2.1. Ball Bearing Outer Race from Frame top and bottom Headstock Tube

- Top headstock tube ball bearing outer race and bottom headstock tapper roller bearing outer race removing special tool.

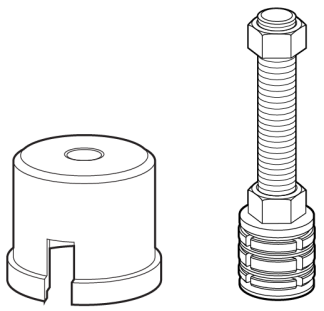

Fig. 6.9.10

SPL 	Part No: ST30272/a Part No: ST-31892-a
	Part Name: Headstock bearing puller assembly

NOTE

- *The tool bunk gap should be evenly spaced, with the spring end located in the middle of the bunk position.*
- *When the tool is in an idle position or being stored, the top nut of the tool should be in loosened condition.*
- *Following the above condition increases the tool life.*

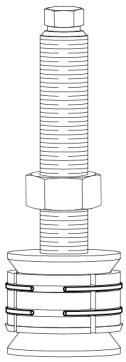

Fig. 6.9.11

- Install special tool **(a)** on frame head tube top **(b)**. Ensure tool is seated properly.

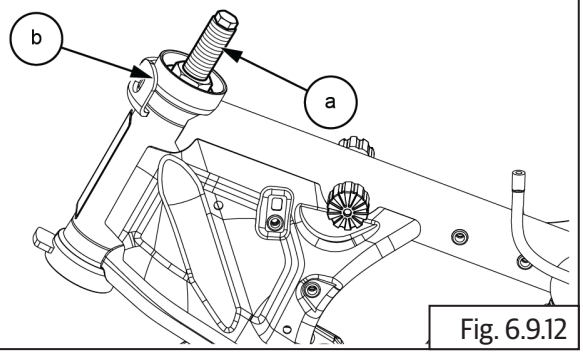

Fig. 6.9.12

SPL 	Part No: ST30272/a Part No: ST-31892-a
	Part Name: Headstock bearing puller assembly

- Rotate tool in clockwise direction and tighten lock nut **(a)**.

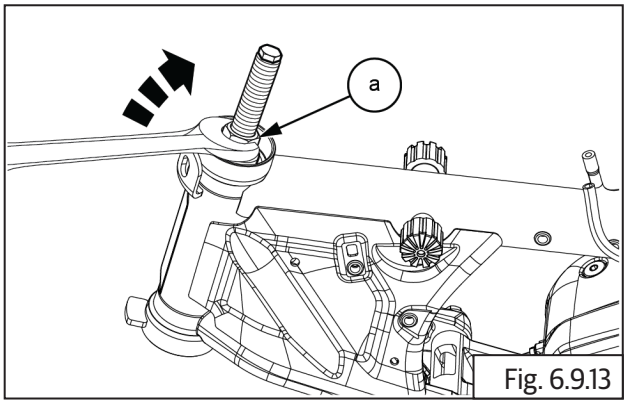

Fig. 6.9.13

SPL 	Part No: ST30272/a Part No: ST-31892-a
	Part Name: Headstock bearing puller assembly
	24 mm Double end spanner and 10 mm Double end spanner.

- Hold lock nut **(a)** and tighten threaded strut **(b)** till resistance is felt and strut cannot be turned further.

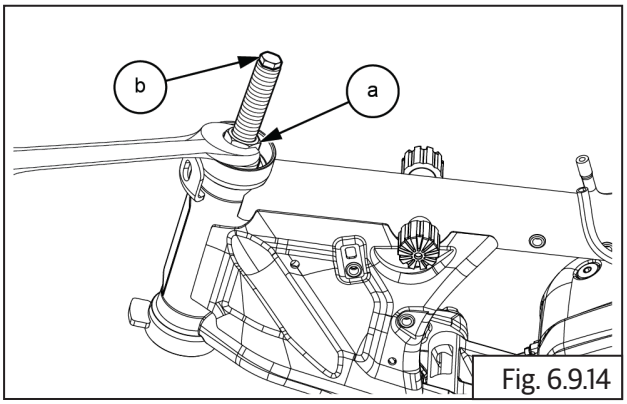

Fig. 6.9.14

	24 mm Double end spanner and 10 mm Double end spanner.

- Assemble puller cup **(a)**, washer **(b)** and hex nut **(M16) (c)** on strut as shown.

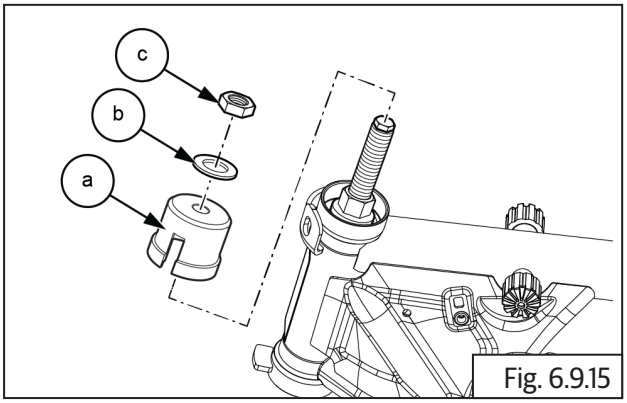

Fig. 6.9.15

SPL	Part No: ST30272/a Part No: ST-31892-a
	Part Name: Headstock bearing puller assembly

- Tighten hex nut **(M16) (a)** in clockwise direction till bearing tool assembly comes out of frame head tube and hex nut rotates free.

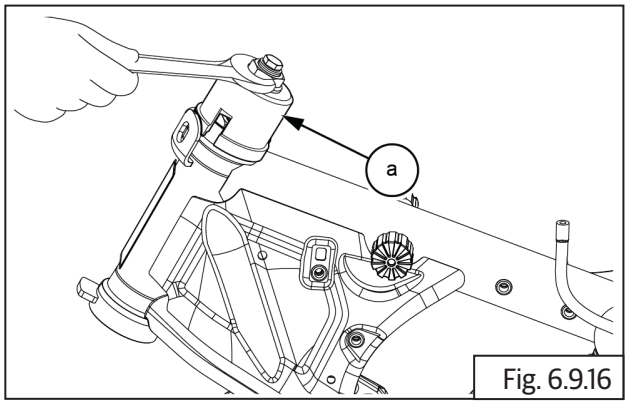

Fig. 6.9.16

	24 mm Double end spanner

- Remove hex nut **(a)**, washer **(b)** and cup **(c)** from strut as shown.

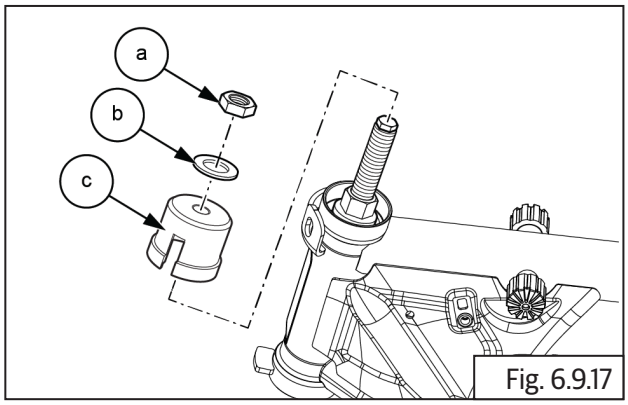

Fig. 6.9.17

- Remove tool **(a)** from frame head tube top **(b)**.

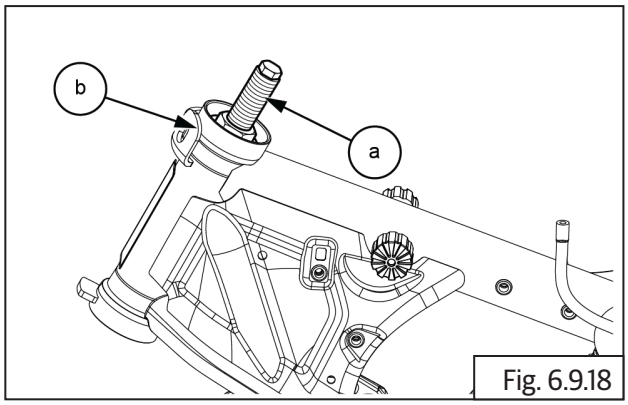

Fig. 6.9.18

- Remove bearing racer **(a)** from the frame head tube top **(b)**.

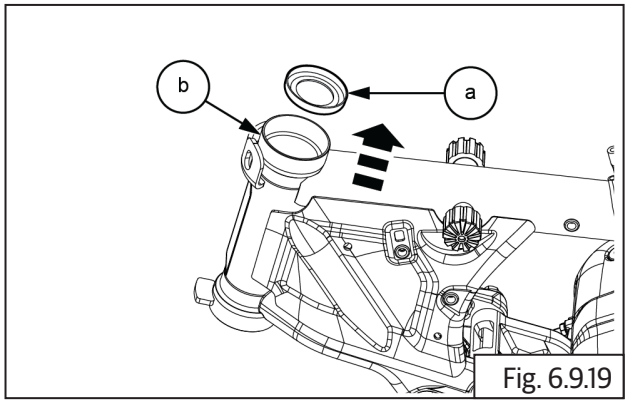

Fig. 6.9.19

- Repeat procedures mentioned above for removing bearing cup from frame head tube bottom.

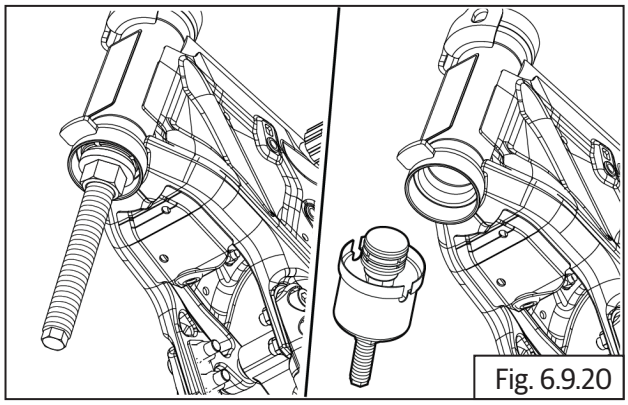
Fig. 6.9.20

SPL	Part No: ST30272/a Part No: ST-31892-a
	Part Name: Headstock bearing puller assembly

6.9.3. Bottom Roller Bearing from Steering Stem

- Use bearing puller T-stem to remove the bearing from T-stem.

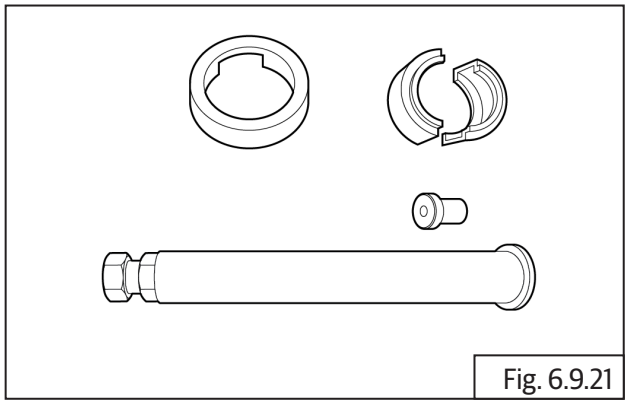
Fig. 6.9.21

SPL	Part No: ST-31889-a
	Part Name: T-STEM Taper Roller Bearing Remover

- Locate and place the bunk **(a)** on stem top.

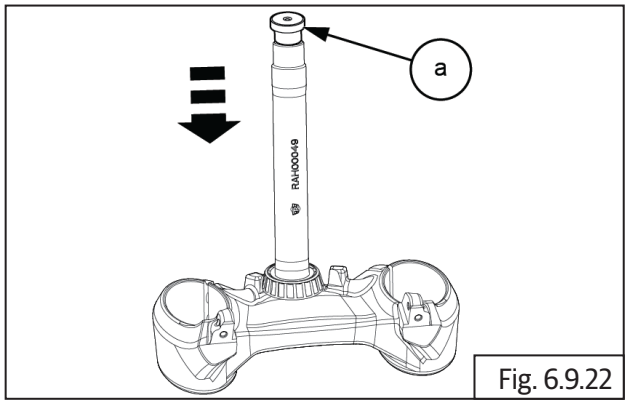

Fig. 6.9.22

SPL	Part No: ST-31889-a
	Part Name: T-STEM Taper Roller Bearing Remover

- Locate and place the sleeve **(a)** into steering stem.

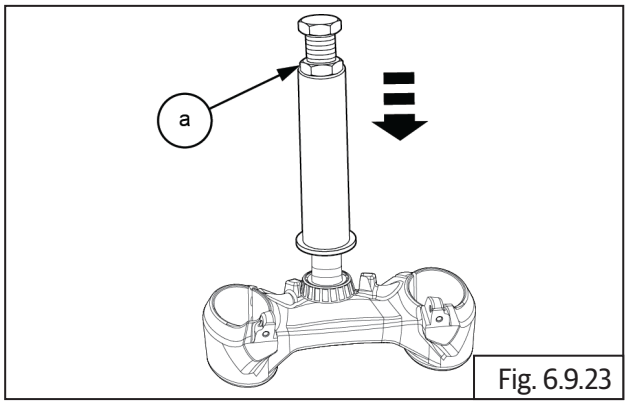

Fig. 6.9.23

SPL	Part No: ST-31889-a
	Part Name: T-STEM Taper Roller Bearing Remover

- Locate and place two halve plate **(a)** on the bottom sleeve.

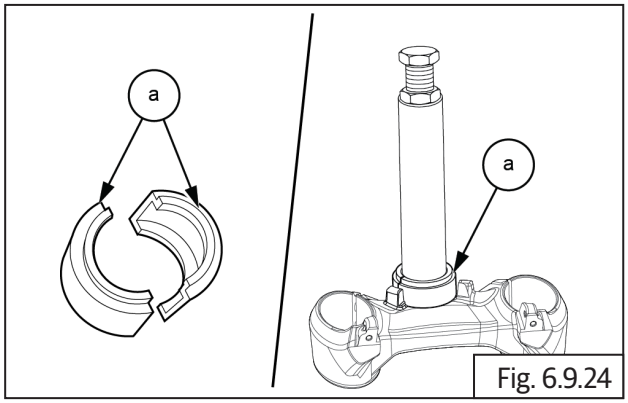

Fig. 6.9.24

SPL	Part No: ST-31889-a
	Part Name: T-STEM Taper Roller Bearing Remover

- Locate and position the sleeve **(a)** into steering stem.

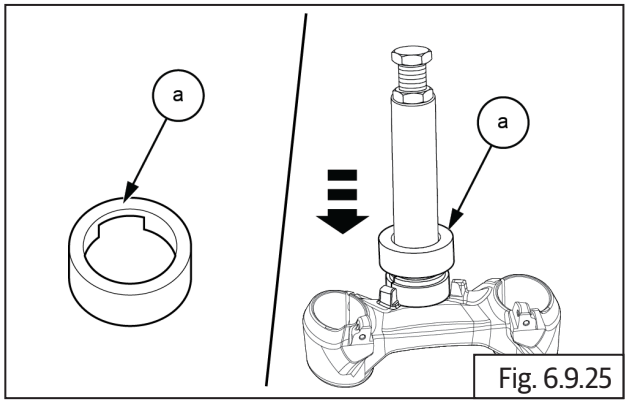

Fig. 6.9.25

SPL	Part No: ST-31889-a
	Part Name: T-STEM Taper Roller Bearing Remover

- Tighten hex nut **(a)** in clockwise direction till bearing tool assembly comes out of frame head tube and hex nut rotates free.

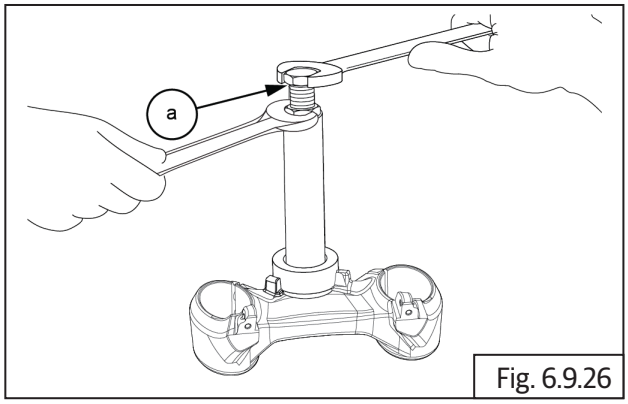

Fig. 6.9.26

	24 mm and 27 mm Double end spanner

- Remove the bearing **(a)** from the bottom of the stem.

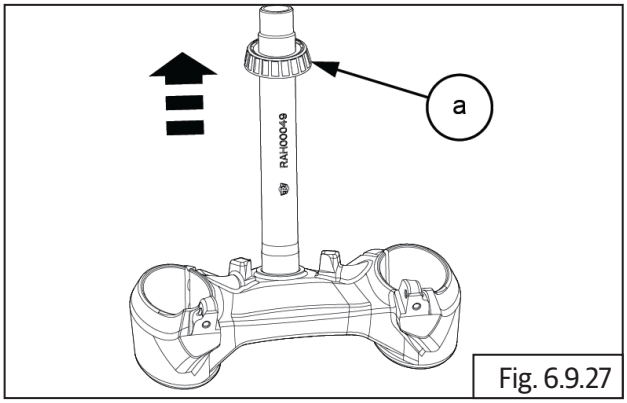

Fig. 6.9.27

6.9.4. Shock absorber

⚠ CAUTION

Ensure the motorcycle is upright on a firm and flat surface.

- Position the screw jack directly under the boss of the crank case.
- Carefully use the screw jack to lift the motorcycle until the front wheel is off the ground.
- Make sure the motorcycle is stable and secure before performing any maintenance or repairs.

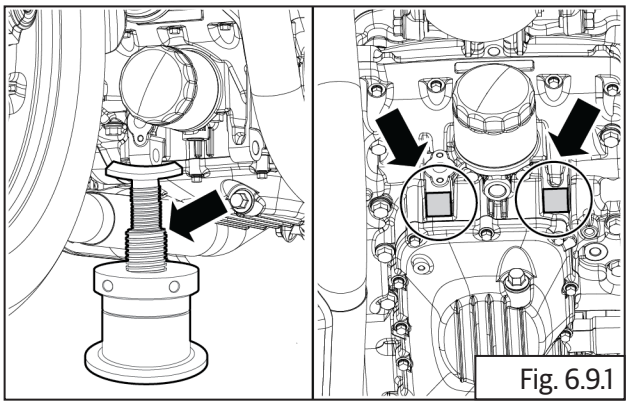
Fig. 6.9.1

- Loosen and remove hex head bolt **(M10) (a)** with nut **(b)** from RHS shock absorber top.

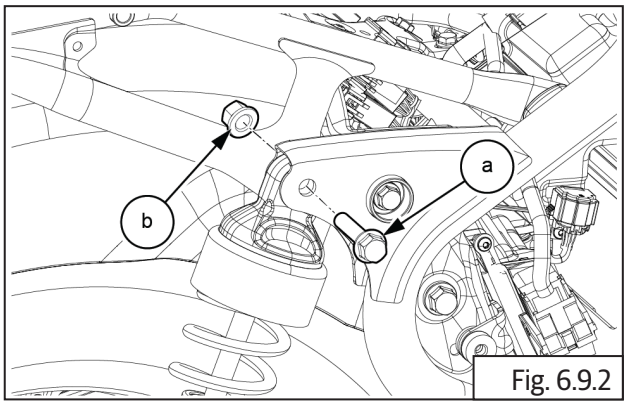

Fig. 6.9.2

	14 mm socket with Ratchet

- Support rear wheel, loosen and remove bolt **(M10) (a)** from the shock absorber bottom.

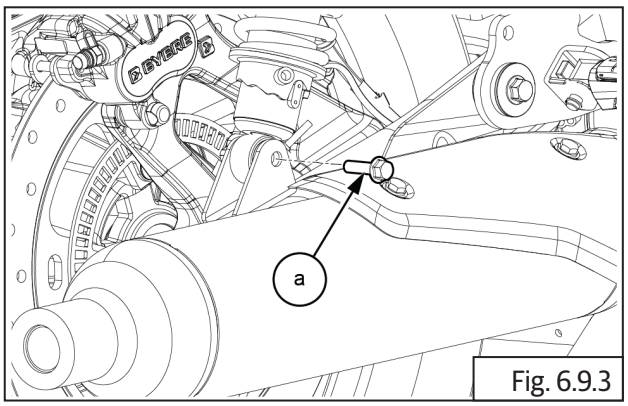

Fig. 6.9.3

	14 mm socket with Ratchet

- Gently remove rear RH shock absorber **(a)** from Swing arm bracket.

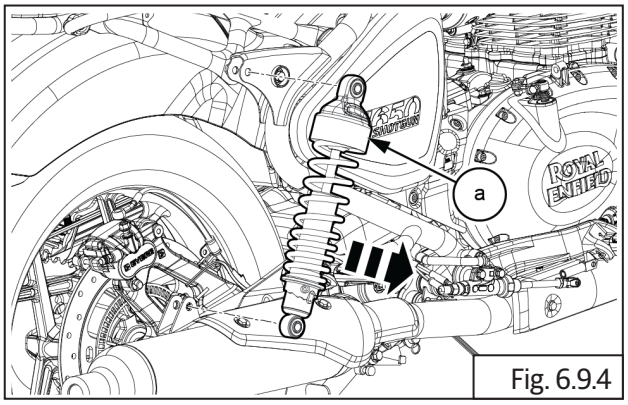

Fig. 6.9.4

- **Repeat the above process to remove LH shock absorber.**

⚠ CAUTION

Ensure motorcycle is supported suitably at the rear end after removing both shock absorbers to prevent motorcycle from tipping over and falling down.

6.9.5. Grab Rail From Frame

- Remove rider and pillion seats from frame.
- Loosen and remove 2 Nos. allen head bolts **(a)** with nut **(b)** from LHS upper sub frame .

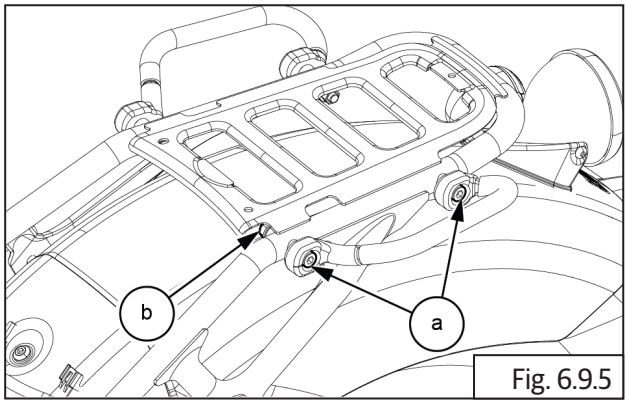

Fig. 6.9.5

- Gently remove the grab rail **(a)** LHS from sub frame **(b)**.

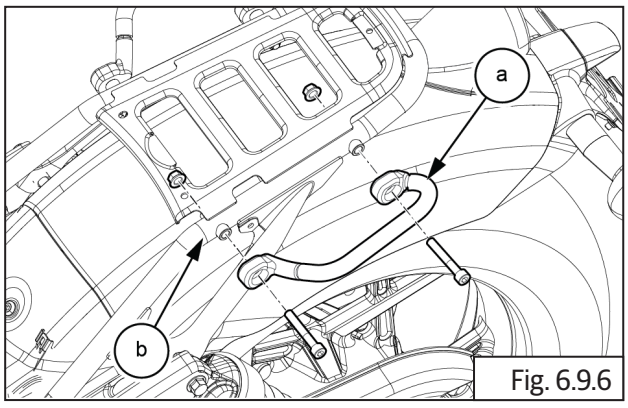

Fig. 6.9.6

	6 mm Allen socket with Ratchet

- Loosen and remove 2 Nos. allen head bolts **(a)** with nut **(b)** from RHS upper sub frame .

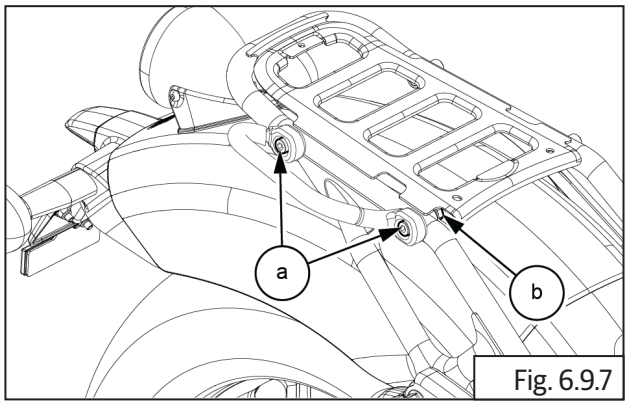

Fig. 6.9.7

	6 mm Allen socket with Ratchet

- Gently remove the grab rail **(a)** RHS from sub frame **(b)**.

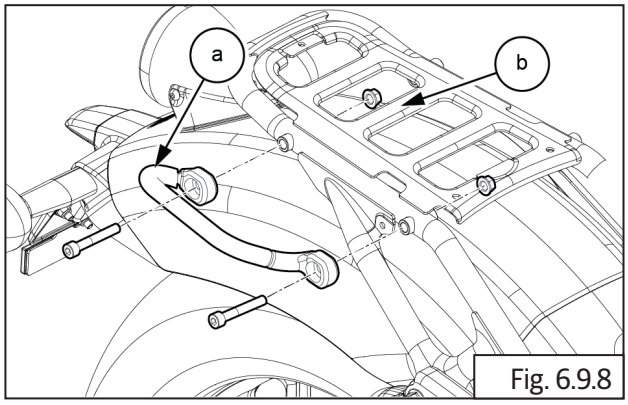

Fig. 6.9.8

6.9.6. Sub Frame

- Loosen and remove hex head bolt **(M10) (a)** with nut **(b)** from LHS shock absorber upper mounting.

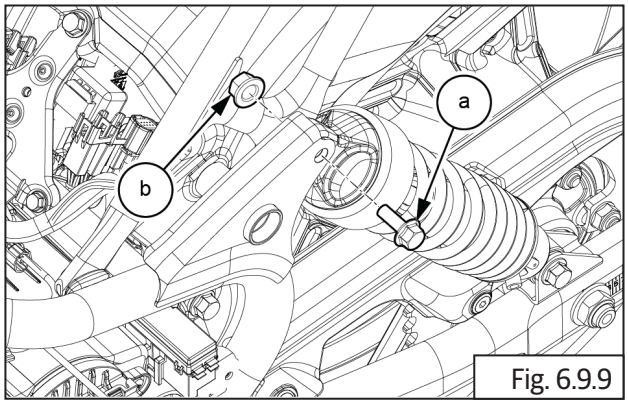

Fig. 6.9.9

	14 mm Socket with Ratchet

- Loosen and remove hex head bolt **(M10) (a)** with nut **(b)** from RHS shock absorber upper mounting.

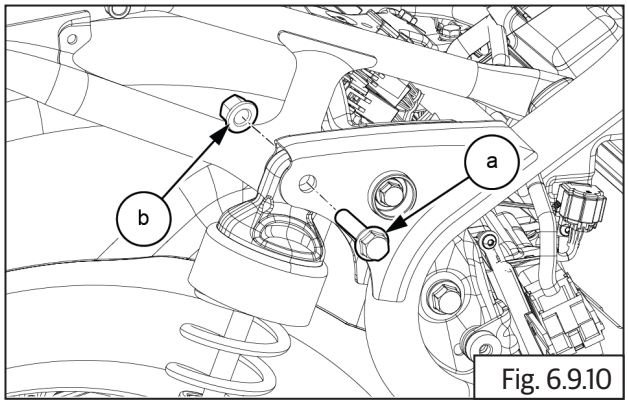

Fig. 6.9.10

	14 mm Socket with Ratchet

- Loosen and remove 2 Nos. hex head bolt **(M10) (a)** from LHS & RHS upper frame front end.

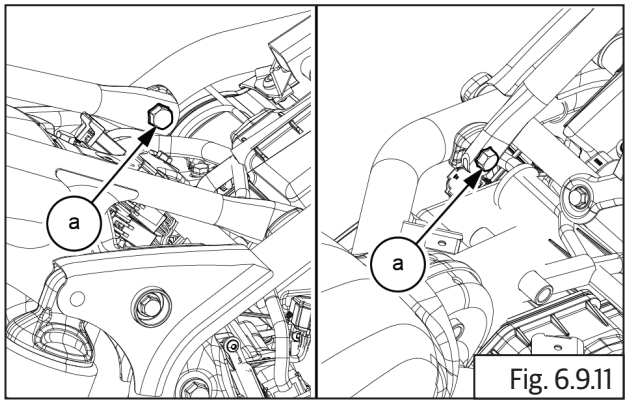

Fig. 6.9.11

	14 mm Socket with Ratchet

- Remove Sub frame **(a)** from main frame .

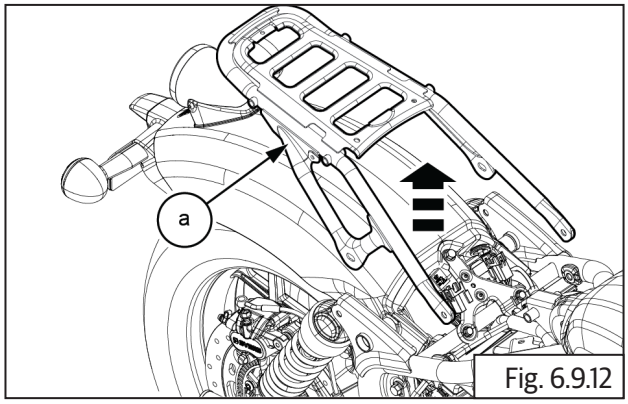

Fig. 6.9.12

6.9.7. Swing arm

- Remove the Rear wheel.
- Remove the Rear shock absorber LH and RH.

⚠ CAUTION

Ensure the motorcycle is upright on a firm and flat surface. Support the motorcycle firmly while removing the Swing arm.

- Remove cap **(a)** from LHS & RHS swing arm spindle

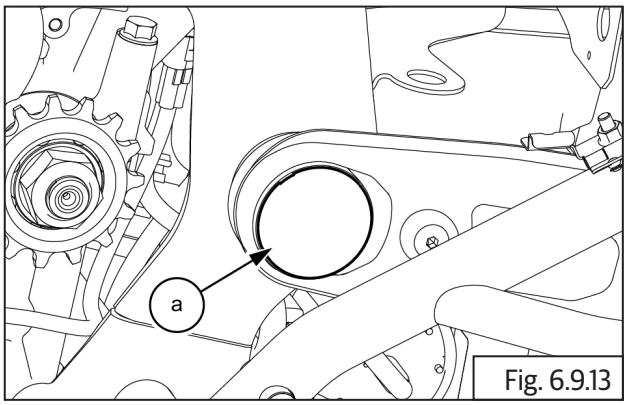

Fig. 6.9.13

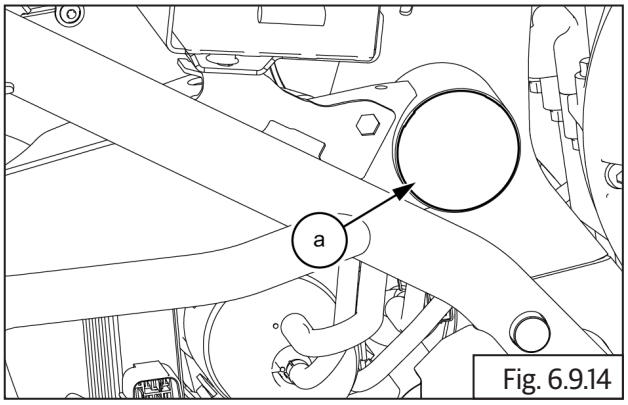

Fig. 6.9.14

	Screw driver

- Hold spindle bolt **(M16) (b)** in frame RH side and loosen and remove hex nut **(M16) (a)** from LH side.

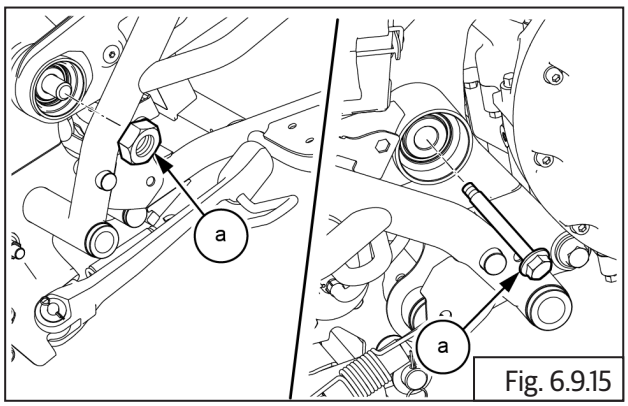

Fig. 6.9.15

	22 mm Socket with Ratchet 24 mm Socket with Ratchet

- Remove the spindle bearing seal **(a)** and thrust washer **(b)** from both end swing arm.

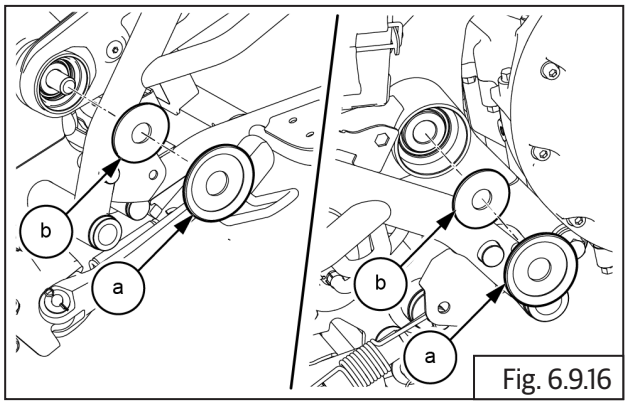

Fig. 6.9.16

- Provide suitable support below chassis frame and remove swing arm **(a)** from chassis frame.

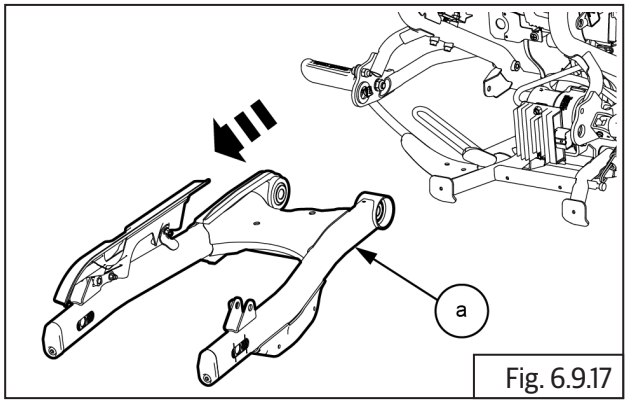

Fig. 6.9.17

- Loosen and remove 2 Nos. Hex socket button bolts **(M6) (a)** from Swing arm LH.

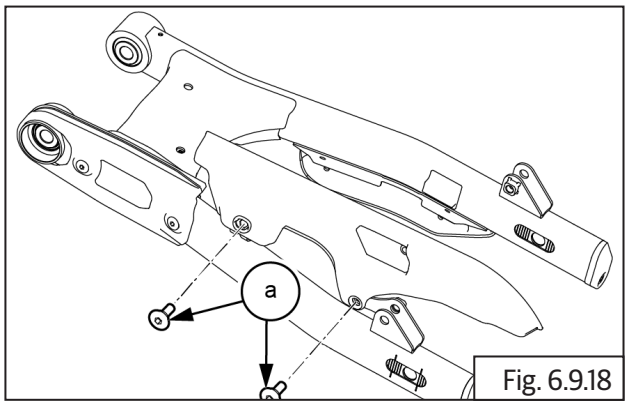

Fig. 6.9.18

	5 mm Allen key

- Separate chain guard **(a)** from Swing arm RH.

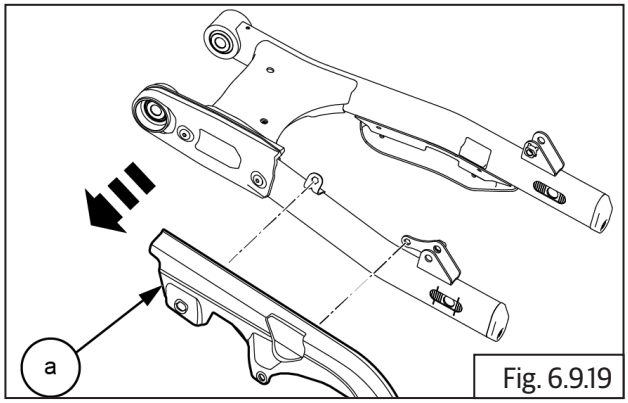

Fig. 6.9.19

- Loosen and remove 2 Nos. Hex socket button bolts **(M6) (a)** from Swing arm LH.

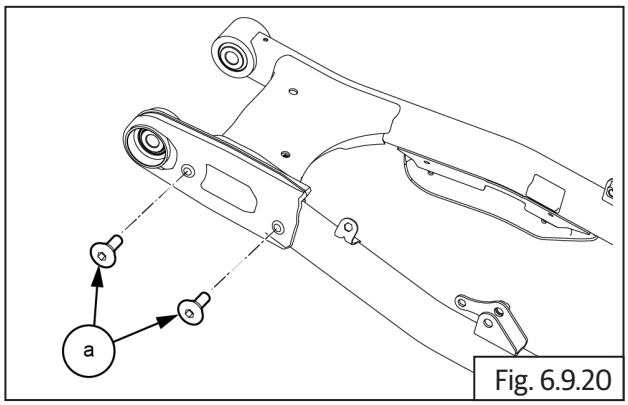

Fig. 6.9.20

	5 mm Allen key

- Separate chain rubbing stripe **(a)** from Swing arm LH.

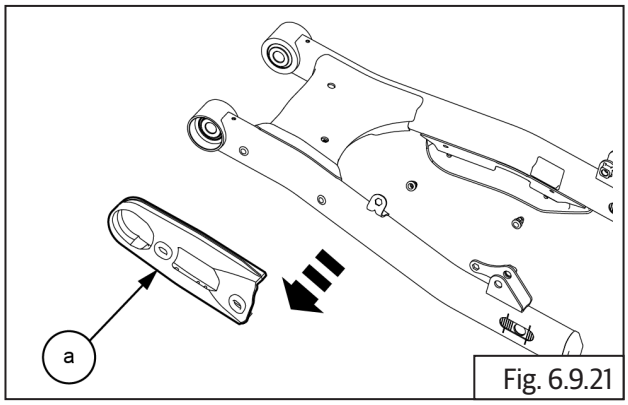

Fig. 6.9.21

- Remove the both end ground sleeve **(a)** from Swing arm .

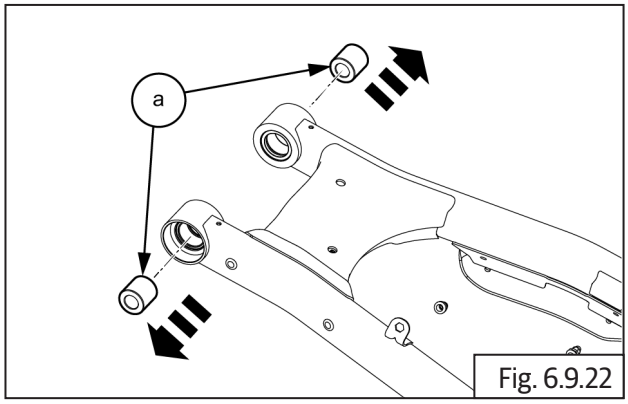

Fig. 6.9.22

- Remove both seal **(a)** from Swing arm .

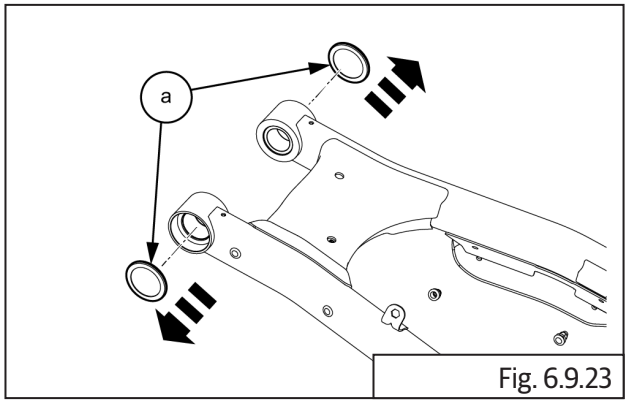

Fig. 6.9.23

- Remove the both end needle bearing using special tool **(a)** with mallet.

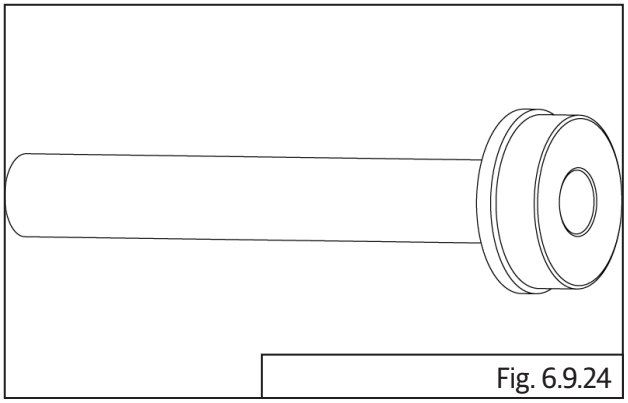
Fig. 6.9.24

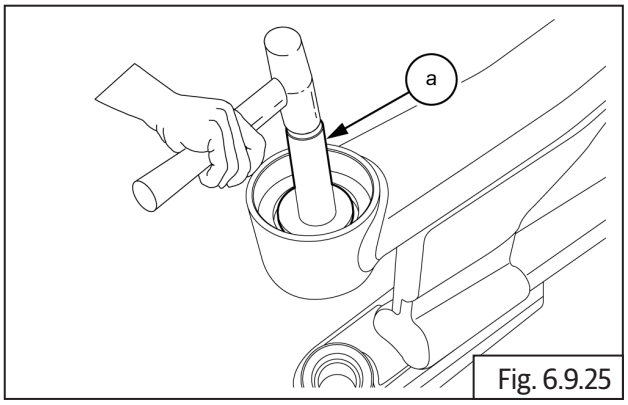

Fig. 6.9.25

SPL	Part No: ST-31895-a
	Part Name: Needle Bearing Remover

Inspection

Steering Stem

- Inspect and replace roller bearing **(a)** if it has rusting, uneven wear of rollers and/or rollers are falling out of cage.

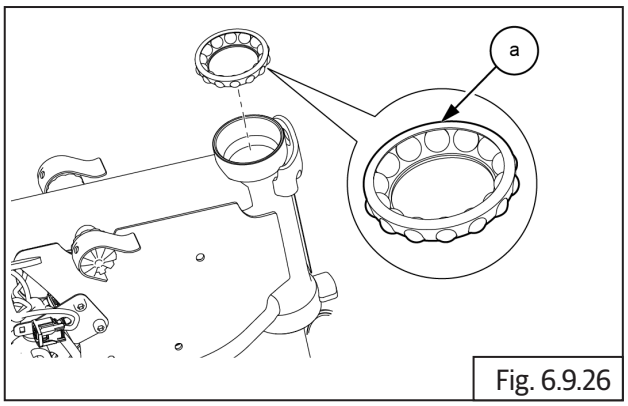

Fig. 6.9.26

- Inspect bearing cups for rust, pitting and uneven wear. Replace if damaged.
- Inspect steering stem for any bends or damages. Replace if damaged.

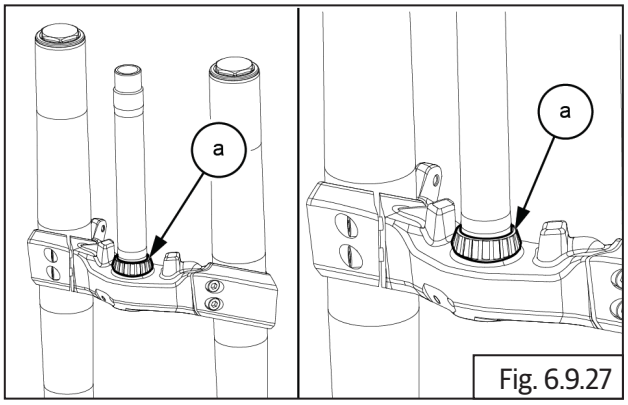

Fig. 6.9.27

Shock absorber

- Inspect shock absorber for damaged canister, spring coil breakage, oil leaks, weak or hard action of shock absorber. Replace if found.
- Inspect mounting hole rubber inserts for any tear or damage. Replace shock absorber.
- Inspect and replace shock absorber rod if it has any bends, cracks or rusting.

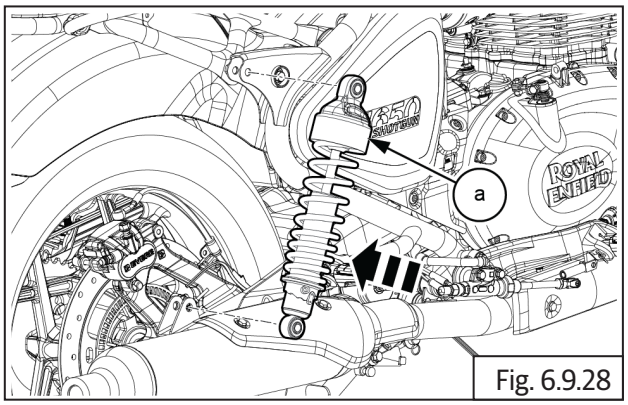

Fig. 6.9.28

Swing arm

- Inspect LH and RH Swing arm for any damages or bends.
- Inspect Swing arm in fully assembled condition in motorcycle for side play, sticky movement in working area and replace bearing sleeve and bearing if any of these conditions are present.
- Inspect if Swing arm end cup is worn-out or damaged.
- Inspect spindle for any wear-out.

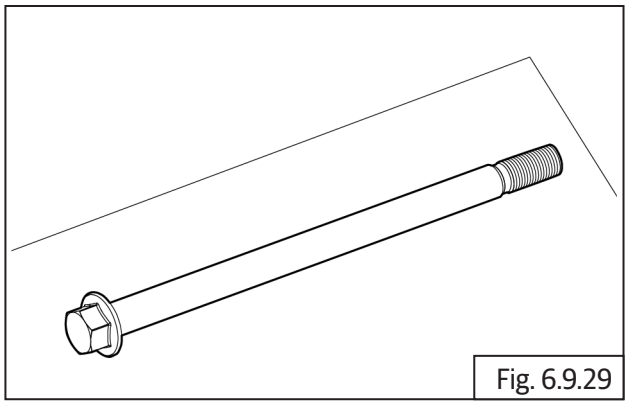
Fig. 6.9.29

Top Yoke

- Inspect top yoke for any cracks or damages in seating area. Replace if damaged.

Replace

- Replace oil seals, dust seals, washers, chain guides whenever removed from the front fork/Swing arm.
- Always fill up front fork with recommended oil from a new container. **DO NOT reuse the oil**.

Assembly

6.9.8. Swing arm

⚠ CAUTION

Ensure the motorcycle is upright on a firm and flat surface.

- Apply grease on the needle roller bearing **(a)** before installing.
- Locate and install needle roller bearing **(a)** into Swing arm LH and RH

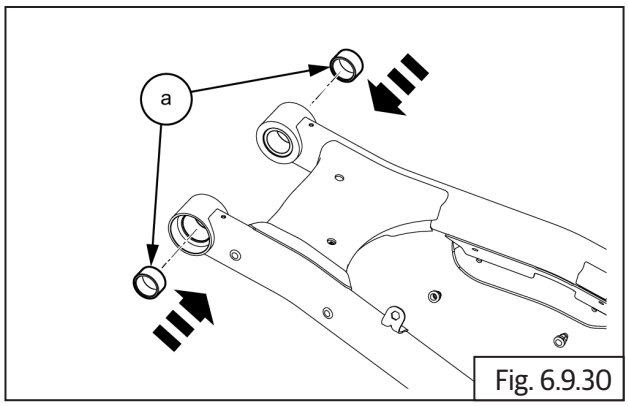

Fig. 6.9.30

- Locate need bearing (a) and special tool into swing arm (b).

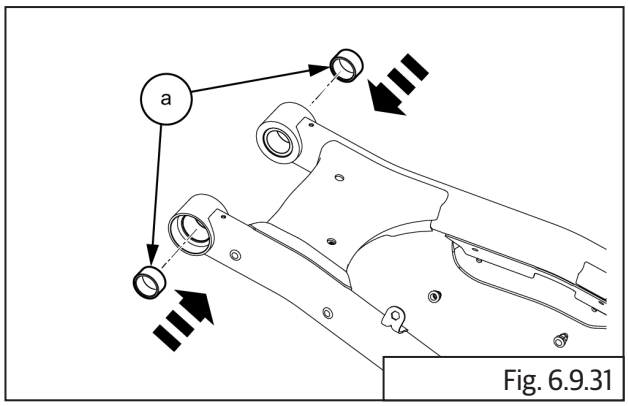

Fig. 6.9.31

- Hold one end of the special tool **(a)** with spanner and tighten at other end with ring spanner .

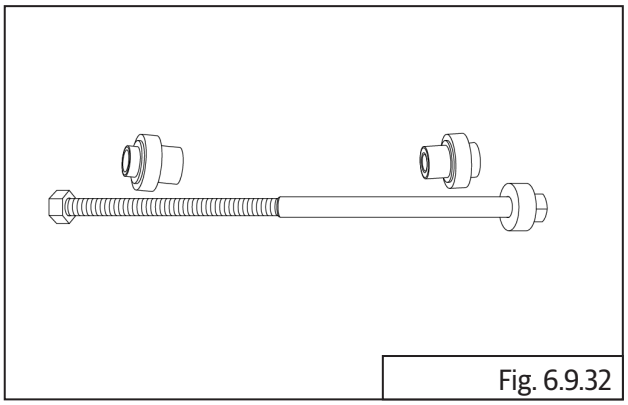

Fig. 6.9.32

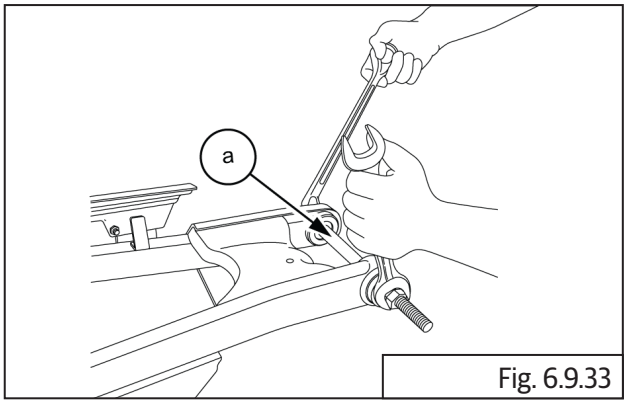

Fig. 6.9.33

SPL 	Part No: ST-31891-a
	Part Name: Needle Bearing Installer

	24 mm Double end Spanner and Ring spanner

- Locate and install the dust seal **(a)** into Swing arm using special tool.

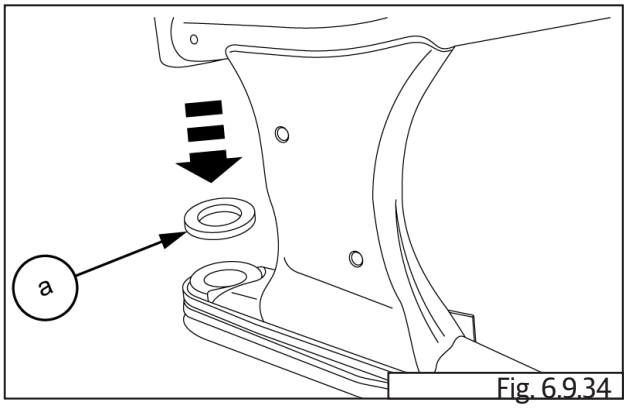

Fig. 6.9.34

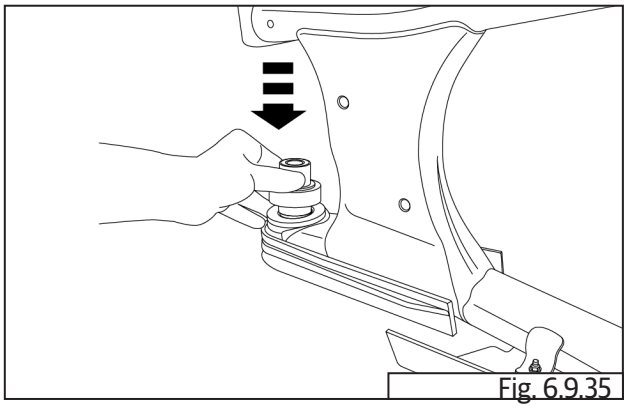

Fig. 6.9.35

SPL	Part No: ST-31891-a
	Part Name: Dust seal Installer

NOTE
• *Avoid reusing the dust seals and bearings as it affects the life of the vehicle.*
• *Ensure seal surface perfectly seated on bearing outer surface.*

- Apply **0.5g** of grease to the inside of the bearing sleeve
- Locate and install ground sleeve **(a)** into Swing arm LH and RH

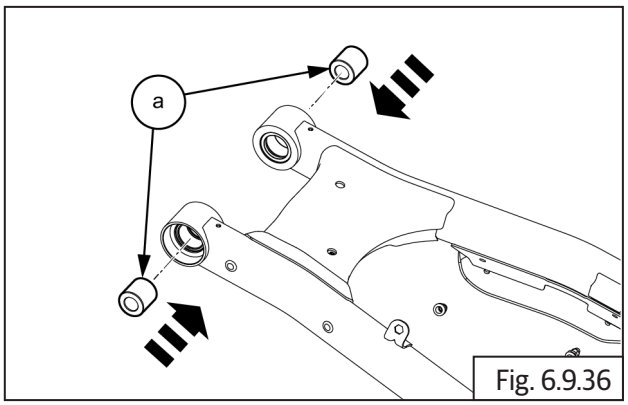

Fig. 6.9.36

	NLGI 2 / Mobil XHP 222

- Apply grease on the seal surface before installing.
- Locate and install seal **(a)** into Swing arm LH and RH.

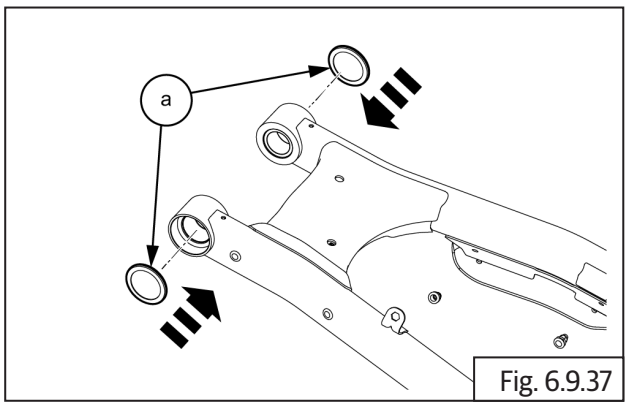

Fig. 6.9.37

	NLGI 2 / Mobil XHP 222

- Locate chain rubbing stripe **(a)** on the RH side, and align mounting holes.

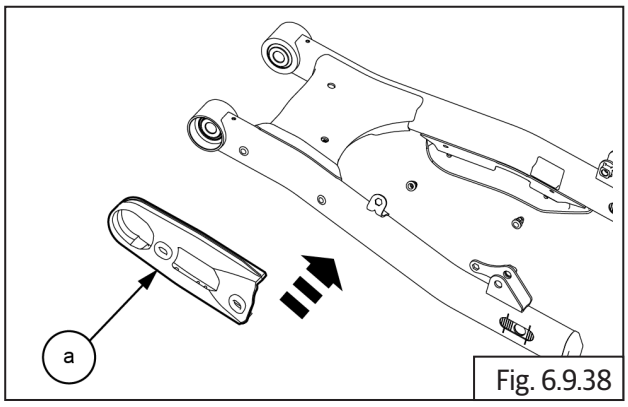

Fig. 6.9.38

- Locate and tighten 2 Nos. Hex socket button bolts **(M6) (a)** into Swing arm LH.

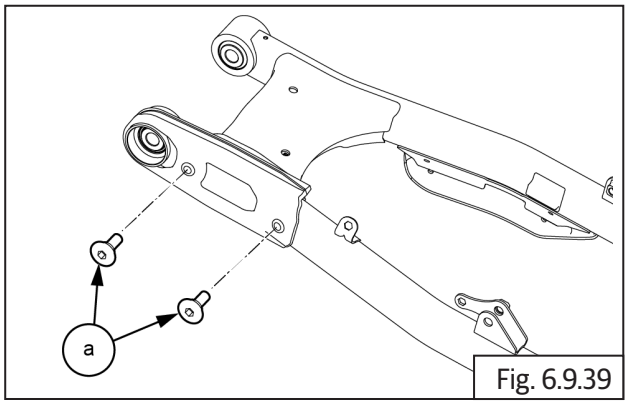

Fig. 6.9.39

	5 mm Allen key
Torque	10 N-m / 1.0 kgf-m

- Locate chain guard **(a)** on the RH side, and align mounting holes.

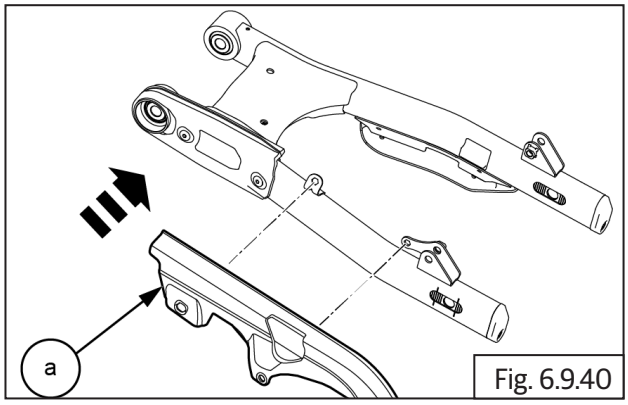

Fig. 6.9.40

- Locate and tighten 2 Nos. Hex socket button bolts **(M6) (a)** into Swing arm LH.

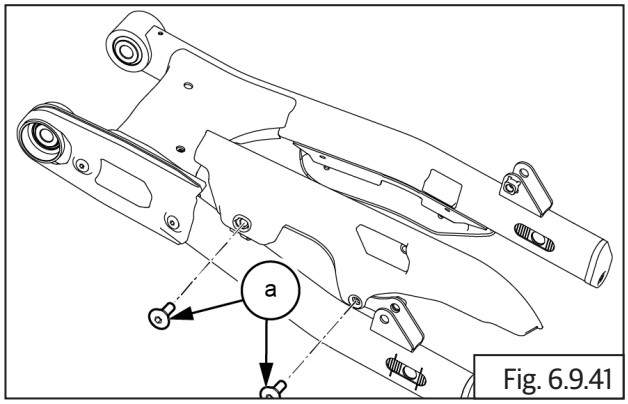

Fig. 6.9.41

	5 mm Allen key
Torque	3 - 5 N-m / 0.3 - 0.5 kgf-m

- Apply **0.5 g** of grease to the top of the sleeve making sure the gap between the sleeve and the swing arm is filled on both sides of the swing arm.
- Provide suitable support below chassis frame and install swing arm **(a)** into chassis frame.
- Position Swing arm **(a)** assembly into frame and ensure mounting holes are aligned properly.

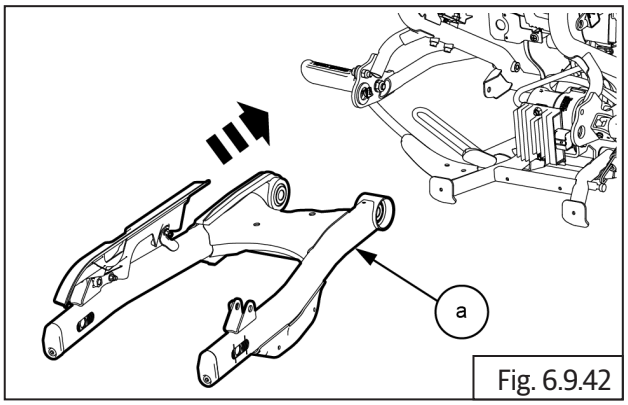

Fig. 6.9.42

	NLGI 2 / Mobil XHP 222

- Remove the spindle bearing seal **(a)** and thrust washer **(b)** from both end swing arm.
- Install thrust washer **(b) and** spindle bearing seal **(a)** into LHS and RHS swing arm.

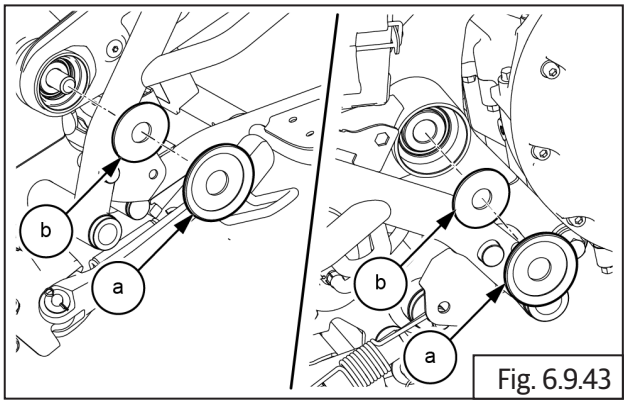

Fig. 6.9.43

- Apply **4g** of grease to the swingarm spindle
- Locate spindle bolt **(M16) (b)** into frame RH side and tighten hex nut **(M16) (a)** into LH side frame.

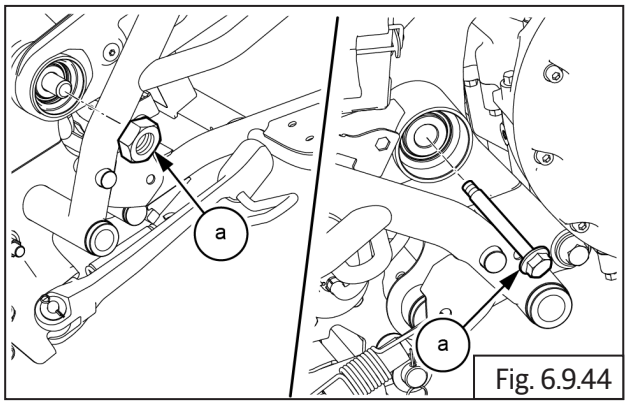

Fig. 6.9.44

	NLGI 2 / Mobil XHP 222

	22 mm Socket with Ratchet 24 mm Socket with Ratchet
Torque	100 N-m / 10.0 kgf-m

- Locate cover **(a)** over LHS & RHS swing arm. Gently press to install.

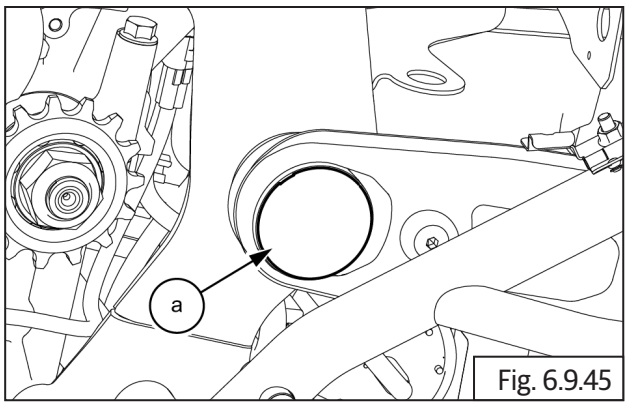

Fig. 6.9.45

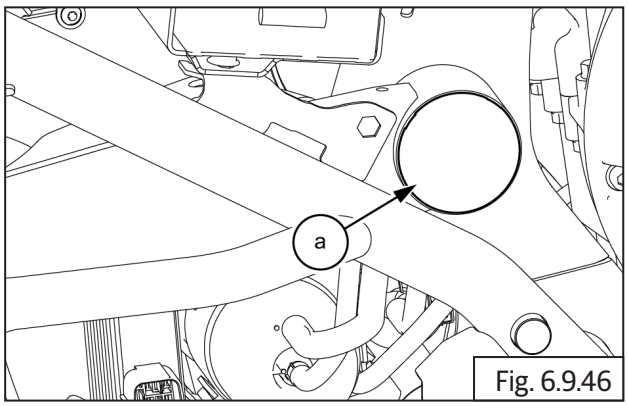

Fig. 6.9.46

6.9.9. Sub frame

- Locate Sub frame **(a)** into mainframe **(b)**.

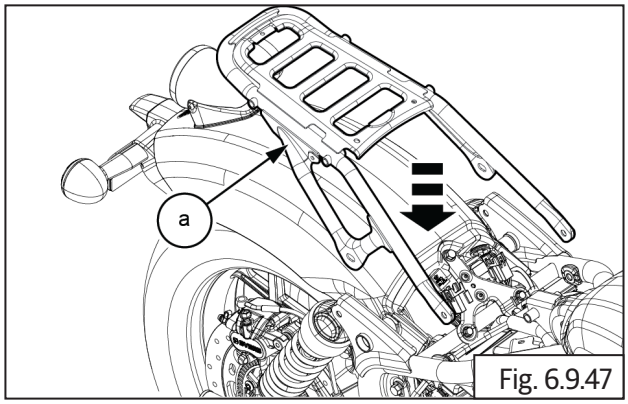

Fig. 6.9.47

- Locate and tighten 2 Nos. hex head bolt **(M10) (a)** from LHS & RHS upper frame front end.

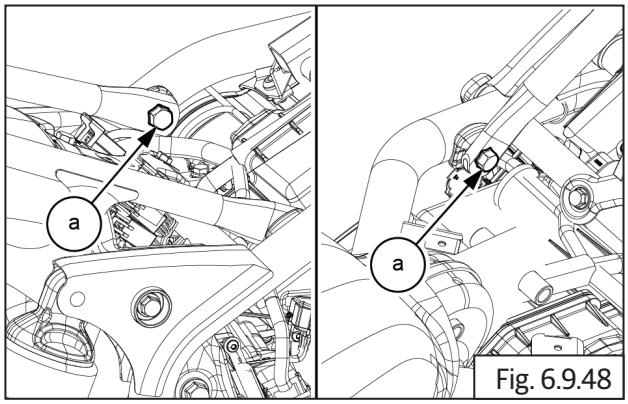

Fig. 6.9.48

	14 mm Socket with Ratchet
Torque	50 N-m / 5.0 kgf-m

- Locate and tighten 2 Nos.hex head bolt **(M10) (a)** with nut **(b)** from LHS & RHS shock absorber upper mounting. .

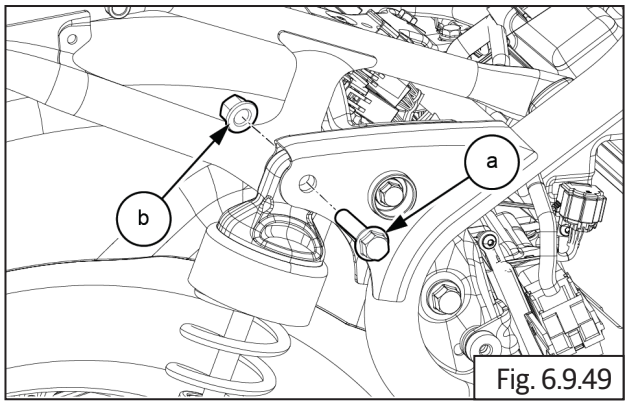

Fig. 6.9.49

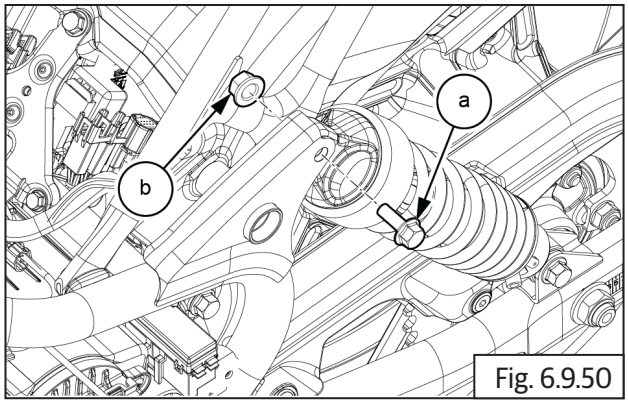

Fig. 6.9.50

	14 mm Socket with Ratchet
Torque	50 N-m / 5.0 kgf-m

6.9.10. Shock absorber

⚠ CAUTION

Ensure the motorcycle is upright on a firm and flat surface.

- Position the screw jack directly under the boss of the crank case.
- Carefully use the screw jack to lift the motorcycle until the front wheel is off the ground.
- Make sure the motorcycle is stable and secure before performing any maintenance or repairs.

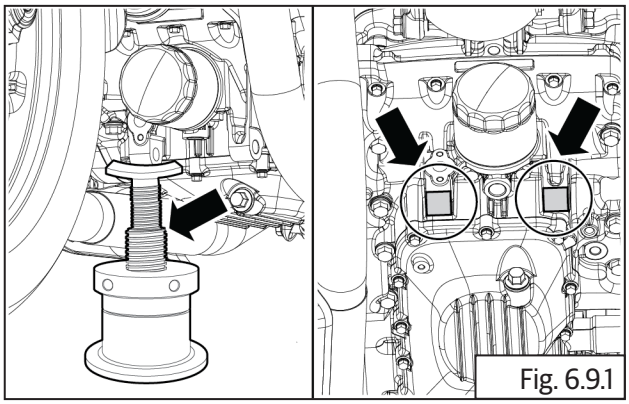
Fig. 6.9.1

- Align bottom mounting hole of shock absorber to Swing arm bracket RH and tighten with hex flange bolt **(M10) (a)**.

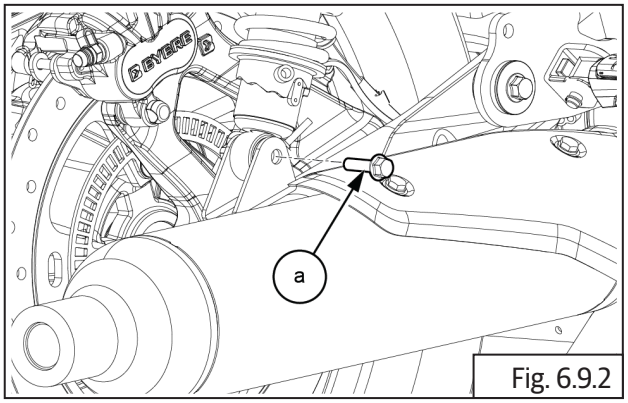

Fig. 6.9.2

	14 mm socket and Ratchet
Torque	45 N·m / 4.5 kgf-m

- Locate and align the shock absorber top to mounting hole on frame RH and tighten with hex flange bolt **(M10) (a)** with nut .

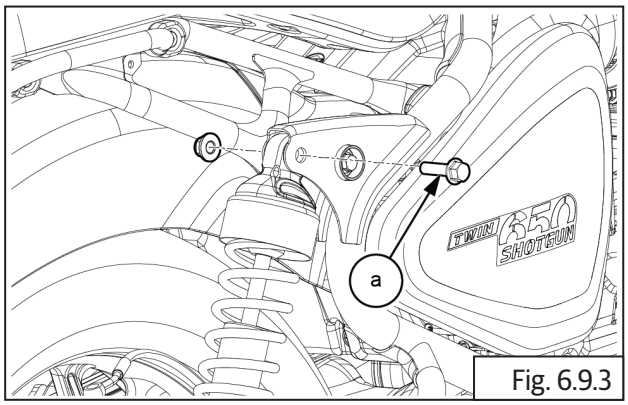

Fig. 6.9.3

	14 mm socket and Ratchet
Torque	45 N·m / 4.5 kgf-m

- Tighten both mounting bolts evenly to torque.
- **Repeat the above process to install LH shock absorber.**

6.9.11. Bottom Roller Bearing into Steering Stem

- Apply **0.5grams** of grease to the lower headstock bearing.

	NLGI 2 / Mobil XHP 222

- Insert the dust seal and roller bearing **(a)**.

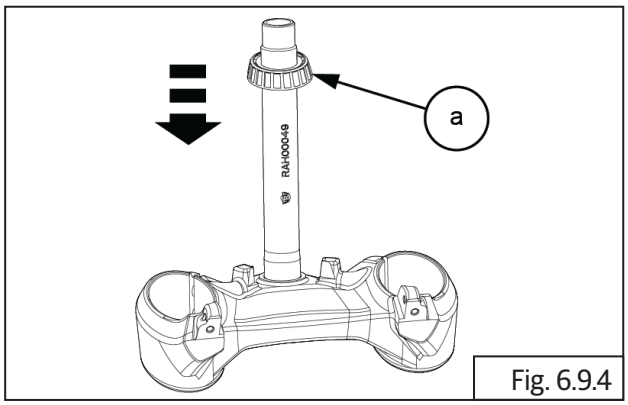

Fig. 6.9.4

- Assemble bearing with special tool **(a)**.

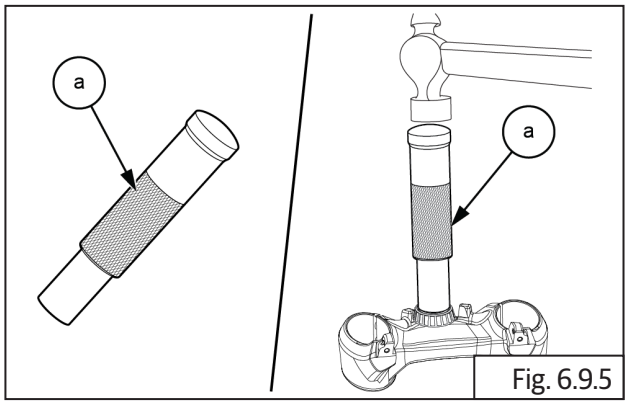

Fig. 6.9.5

SPL	Part No: ST-31893-a
	Part Name: T-Stem taper roller bearing installer

- Install the lower yoke with stem **(a)** into both fork assembly.

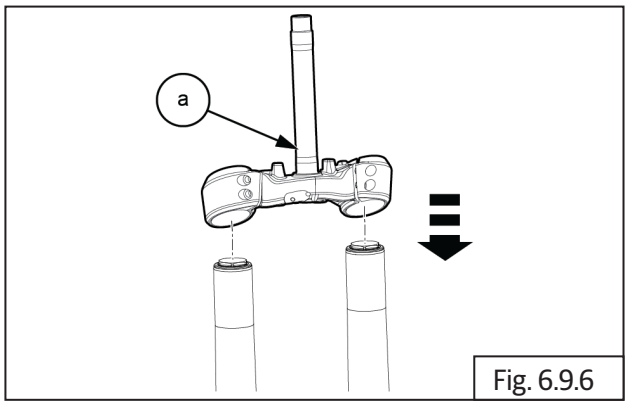

Fig. 6.9.6

- Locate and tighten 2 Nos. cap bolts **(M8) (a)** into RHS ower yoke.

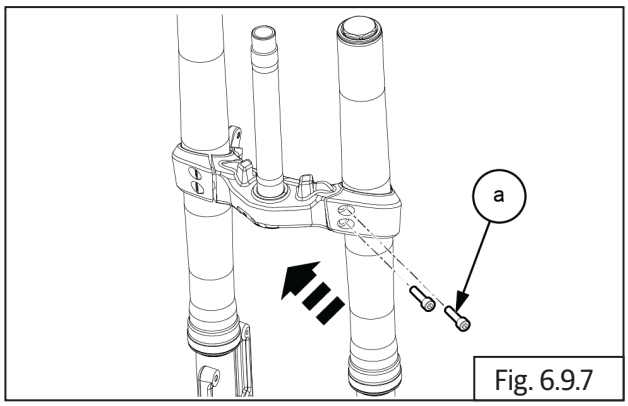

Fig. 6.9.7

	6 mm Allen socket with Ratchet
Torque	23 N-m / 2.3 kgf-m

- Locate and tighten 2 Nos.. cap bolts **(M8) (a)** into LHS lower yoke.

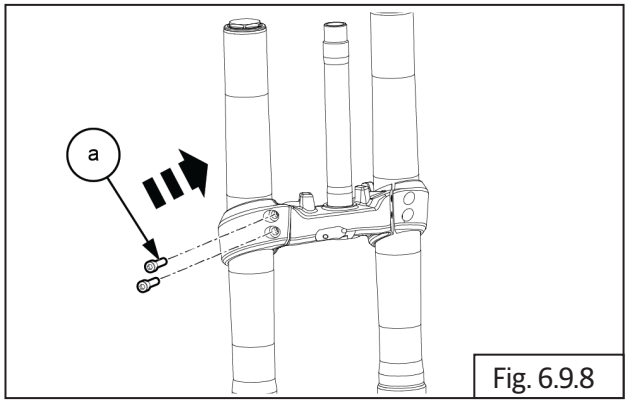

Fig. 6.9.8

	6 mm Allen socket with Ratchet
Torque	23 N-m / 2.3 kgf-m

6.9.12. Ball Bearing into Frame top and bottom Head Tube

- Locate bottom bearing outer race **(b)** and top bearing outer race **(a)** into frame headstock tube.

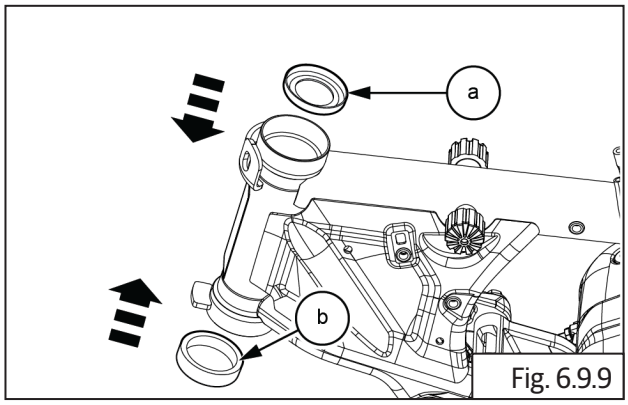

Fig. 6.9.9

- Use bearing race installer tool to install top and bottom bearing races into headstock.

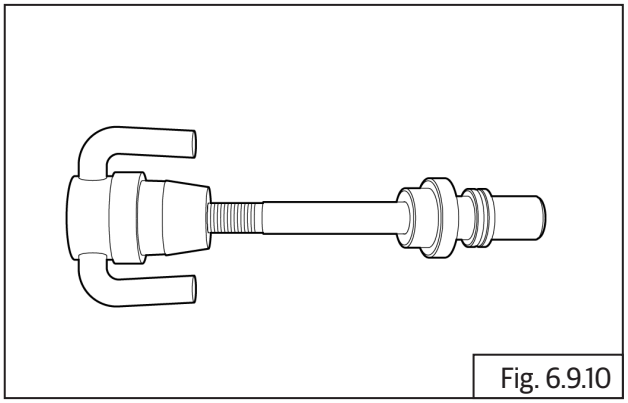
Fig. 6.9.10

SPL 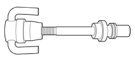	Part No: ST-31890-a Part No: ST-31894-a
	Part Name: Headstock bearing race installer

- Locate the race installer tool **(a)** into headstock top side.

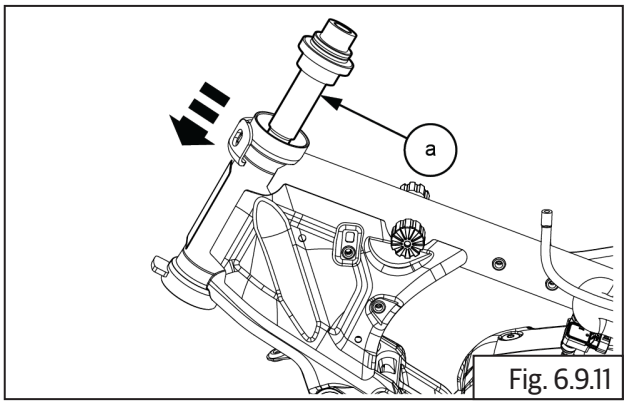

Fig. 6.9.11

SPL 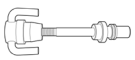	Part No: ST-31890-a Part No: ST-31894-a
	Part Name: Headstock bearing race installer

- Tighten the bottom nut **(a)** to clockwise direction

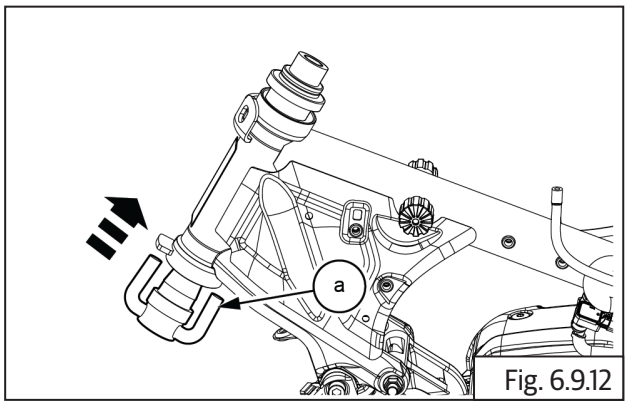

Fig. 6.9.12

SPL	
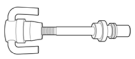	Part No: ST-31890-a Part No: ST-31894-a
	Part Name: Headstock bearing race installer

- Tighten tool head **(a)** using T rod till bearing race perfectly seat.

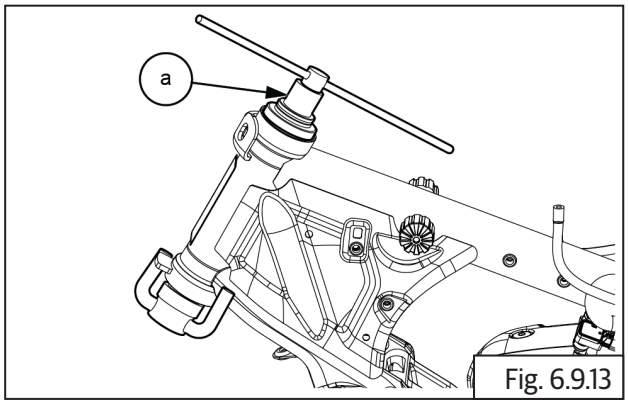

Fig. 6.9.13

SPL	
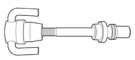	Part No: ST-31890-a Part No: ST-31894-a
	Part Name: Headstock bearing race installer

- Remove the installer tool **(a)** from the headstock.

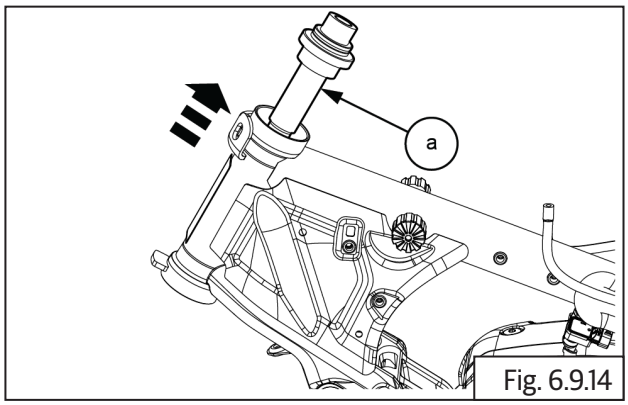

Fig. 6.9.14

SPL	
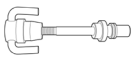	Part No: ST-31890-a Part No: ST-31894-a
	Part Name: Headstock bearing race installer

- Apply **0.5grams** of grease to the upper headstock bearing.
- install bearing **(a)** into frame top head tube top **(b)**.

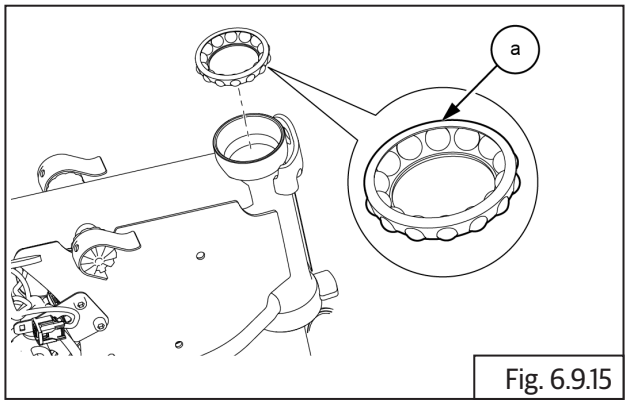

Fig. 6.9.15

	NLGI 2 / Mobil XHP 222

6.9.13. Steering Stem Assembly into Frame Head Tube

- Gently insert steering stem with fork assembly **(a)** into frame head tube bottom .

⚠ CAUTION

DO NOT tap or use force to assembly the steering stem into frame head tube.

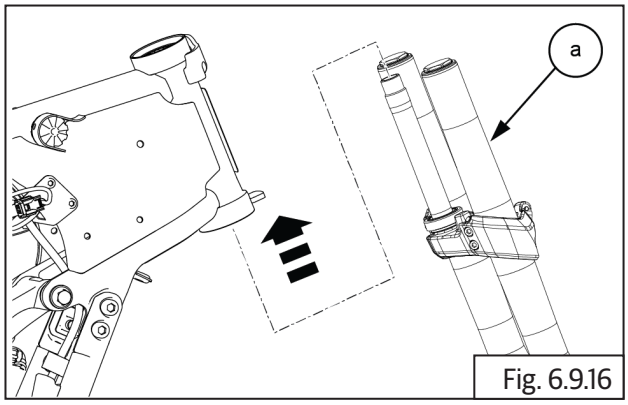

Fig. 6.9.16

- Hold steering stem from bottom and install head stock seal **(a)** into head tube .

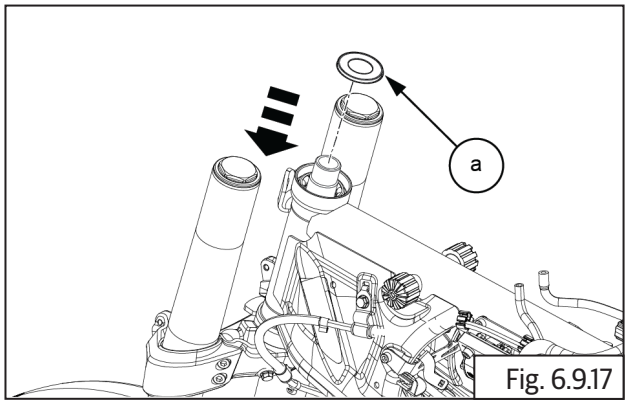

Fig. 6.9.17

- Hold steering stem from bottom and install head stock cover **(a)** into head tube .

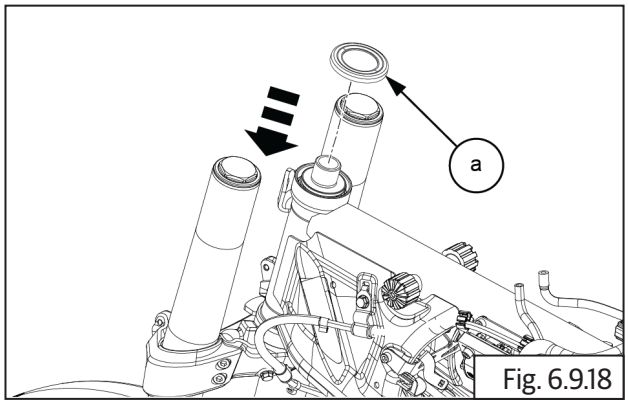

Fig. 6.9.18

⚠ CAUTION

Support steering stem from bottom. DO NOT allow the steering stem to drop out of frame head tube.

- Pre-fit the stem nut **(a)** over the steering stem,do not tighten the stem nut fully.
- Apply **35Nm** torque then immediately loosen the stem nut **(a)**.
- Set the final torque of **8Nm** using a tightening tool.

NOTE

- *After setting the torque to 8Nm, do not steer the bike.*

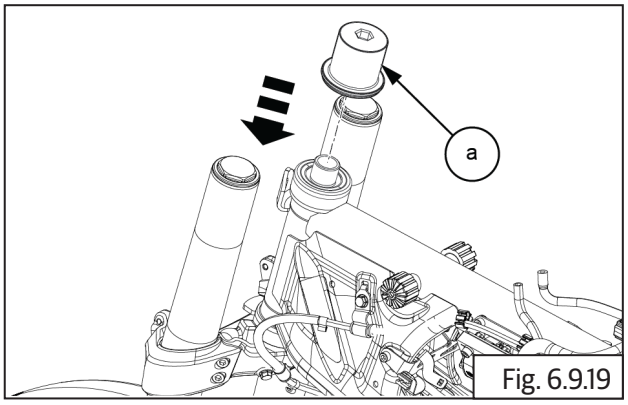

Fig. 6.9.19

	10 mm Allen socket with Ratchet

Check the following

- Check the free movement of steering stem from left to right.
- Check axial play of steering stem at center, extreme left and right positions.
- Check lateral play of steering stem at center, extreme left and right positions.
- Tighten or loosen stem nut to ensure no axial or lateral movement is present and the steering movement is smooth.

⚠ CAUTION

DO NOT over tighten the nut. Over/under torquing will lead to improper adjustment of steering stem.

Check for smooth turning in left and right directions and tighten just sufficiently.

- Install the following parts:
- Install the Upper Yoke.
- Install the Aggregates of Handlebar.
- Install the Handlebar.
- Install the Instrument cluster on top yoke.
- Connect instrument cluster wiring connector.
- Connect ignition switch connector.
- Install the Trafficators.
- Install the Headlamp assembly and housing.
- Install the Front number plate.
- Install the Front mudguard.
- Wheel speed sensor into the fork end LH. Support wheel speed sensor suitably.
- Fix brake hose and wheel speed sensor wires into the clips.
- Install the Front wheel.
- Install the Fuel tank.

vertical distance of front fork

NOTE
• *After assembly the fork check vertical distance between fork cap to top edge of top yoke.*

- Take the reference of drill identical dot from fork cap nut
- Drill dot on fork cap to be aligned facing forwards.

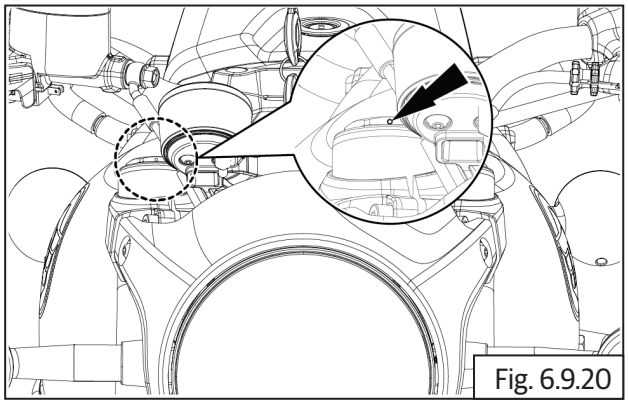

Fig. 6.9.20

- Drill dot height to be measured vertically from the top surface of the yoke as shown below. The same dimension applies to LH and RH forks.

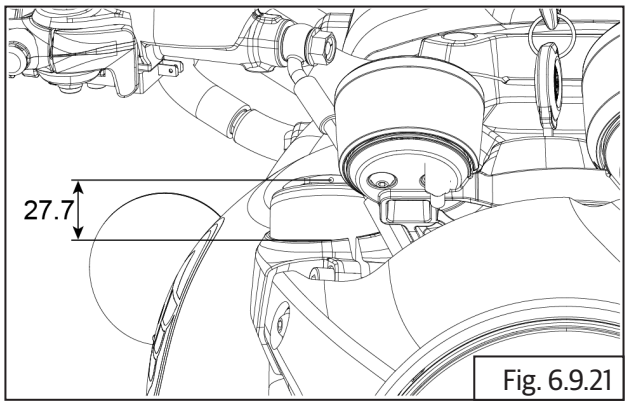

Fig. 6.9.21

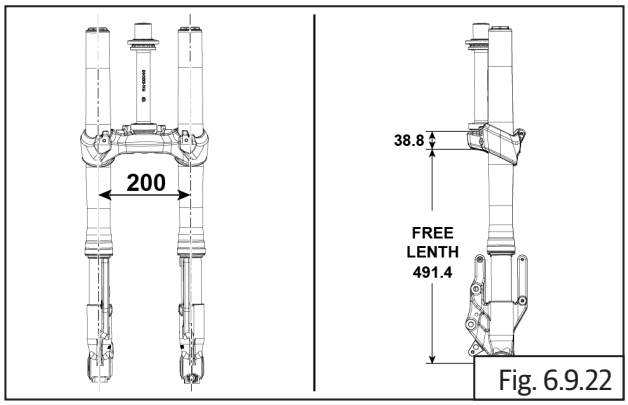

Fig. 6.9.22

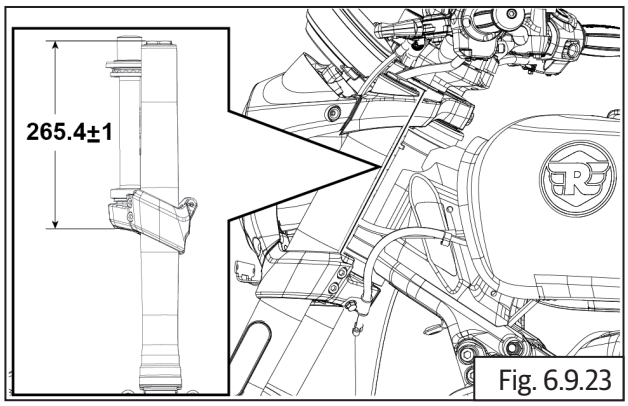

Fig. 6.9.23

6.9.14. Rear Suspension Setting

- Rest the motorcycle on center stand.
- Ensure the tyre pressure is at recommended specification.

- **Solo:**

  Front tyre: 41 psi/2.88 kg/cm2.
  Rear tyre: 36 psi/2.53 kg/cm^2.

- **With Pillion:**

  Front tyre: 41 psi/2.88 kg/cm2.
  Rear Tyre: 41 psi/2.88 kg/cm2.

NOTE
• Ensure adjuster are clear of all dirt and debris before adjusting, if they have dirt or debris please clean it suitably before adjusting

- Ensure adjuster are clear of all dirt and debris before adjusting, if they have dirt or debris please clean it suitably before adjusting.
- The adjuster is a 5 step adjuster and it is kept at first notch position.
- Adjust shock preload by rotating the adjuster clockwise using Allen key to increase the preload

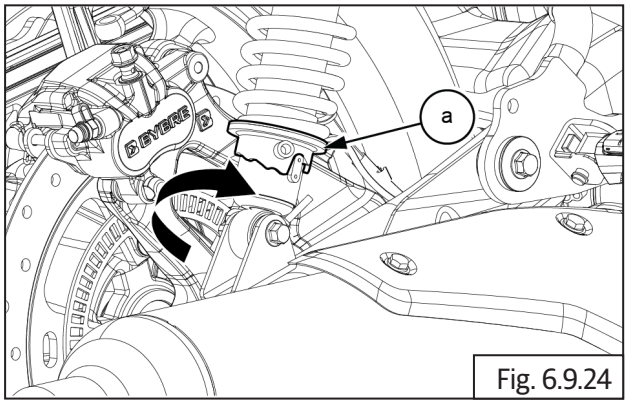

Fig. 6.9.24

	5 mm Allen key
	Extension tube

- . Adjust shock preload by rotating anti-clockwise using Allen key to decrease preload (to make it to first notch position.

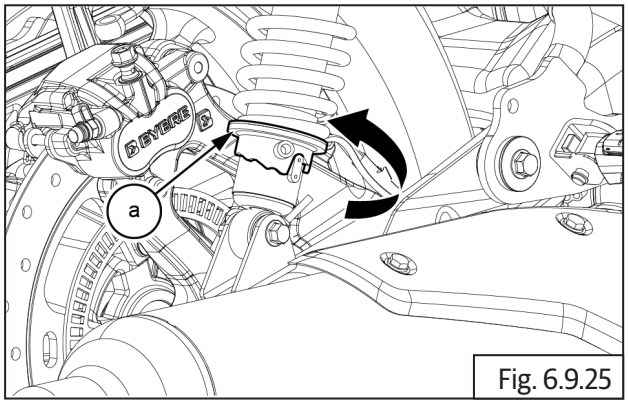

Fig. 6.9.25

	5 mm Allen key
	Extension tube

⚠ CAUTION
DO NOT use any additional tools for this purpose other than 5mm allen key.

NOTE
• Make the same adjustments on both sides, uneven adjustment may lead to discomfort to the rider.

6.9.15. Grab Rail From Frame

- Align the grab rail and install 2 Nos. bolts **(a)** on LHS upper sub frame **(b)**.

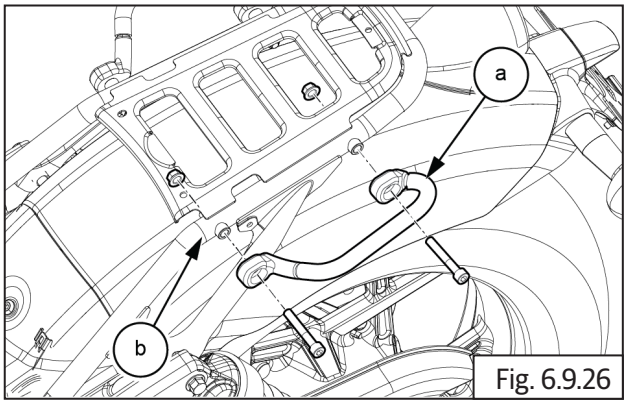

Fig. 6.9.26

- Tighten the 2 Nos. allen head bolts **(a)** with nut **(b)** from LHS upper sub frame

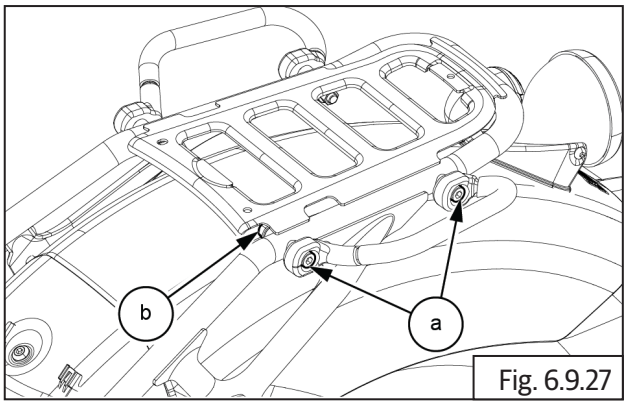

Fig. 6.9.27

	6 mm Allen socket with Ratchet

- Align the grab rail and install 2 Nos. bolts **(a)** on RHS upper sub frame **(b)**.

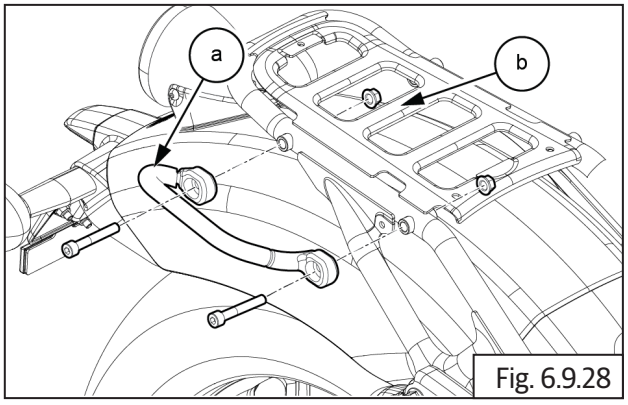

Fig. 6.9.28

- Tighten the 2 Nos. allen head bolts **(a)** with nut **(b)** from RHS upper sub frame

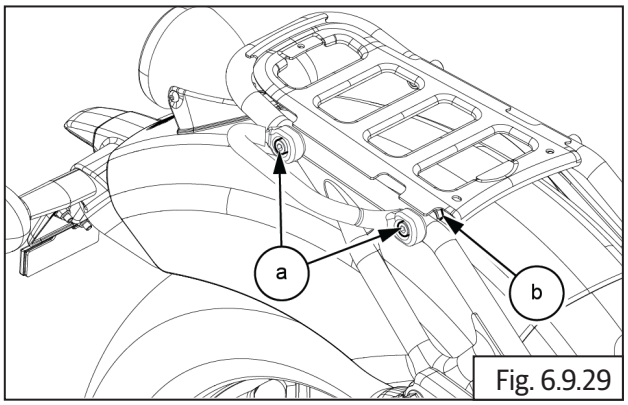

Fig. 6.9.29

	6 mm Allen socket with Ratchet

Symptom	Possible Cause	Diagnosis	How to Fix	Recommended Specification
1. Front Fork/Steering Stem Related				
Riding is unstable	Tyre seating on rims is improper.	Tyre bead is uneven at the rim surface.	Remove tyre and reassemble correctly.	
	Wheel rims are out of trueness.	Wheel rims are bent/have excessive run-out.	Remove tyre and true the wheel rim correctly.	
	Wheel rims have a crack/heavy damage.	Wheel rims have been cracked/damaged due to impact.	Replace with Royal Enfield genuine wheel rims.	
	Spokes are broken.	One/several spokes are broken.	Replace spokes and correct wheel trueness.	
	Wheels have excessive axial/side play.	Wheel bearings are worn-out	Remove bearing and replace	
	Hubs front/rear are cracked/damaged	Wheel hubs are damaged due to impact.	Replace with Royal Enfield genuine hubs.	
	Fork main tube movement in fork end is sticky.	Fork main tube is bent.	Dismantle fork legs, check main tube for straightness and replace main tubes.	
		Fork end tubes are damaged.	Dismantle fork legs, check fork ends inside for excessive wear-out and replace.	
	Steering stem movement is not smooth.	Control cables/wiring harness is not routed properly.	Route the control cables/ wiring harness correctly and strap to frame.	
		Steering stem nut is excessively tightened.	Adjust the steering stem nut correctly.	
		Steering stem bearings rollers have sticky movement/is rusted/bearing is damaged/uneven seating.	Dismantle steering stem and replace bearings.	
	Steering stem is bent.	Steering stem is bent.	Replace steering stem.	

Troubleshooting

Symptom	Possible Cause	Diagnosis	How to Fix	Recommended Specification
1. Front Fork/Steering Stem Related				
Riding is unstable	Tyre seating on rims is improper.	Tyre bead is uneven at the rim surface.	Remove tyre and reassemble correctly.	
	Wheel rims are out of trueness.	Wheel rims are bent/have excessive run-out.	Remove tyre and true the wheel rim correctly.	
	Wheel rims have a crack/heavy damage.	Wheel rims have been cracked/damaged due to impact.	Replace with Royal Enfield genuine wheel rims.	
	Spokes are broken.	One/several spokes are broken.	Replace spokes and correct wheel trueness.	
	Wheels have excessive axial/side play.	Wheel bearings are worn-out	Remove bearing and replace	
	Hubs front/rear are cracked/damaged	Wheel hubs are damaged due to impact.	Replace with Royal Enfield genuine hubs.	
	Fork main tube movement in fork end is sticky.	Fork main tube is bent.	Dismantle fork legs, check main tube for straightness and replace main tubes.	
		Fork end tubes are damaged.	Dismantle fork legs, check fork ends inside for excessive wear-out and replace.	
	Steering stem movement is not smooth.	Control cables/wiring harness is not routed properly.	Route the control cables/ wiring harness correctly and strap to frame.	
		Steering stem nut is excessively tightened.	Adjust the steering stem nut correctly.	
		Steering stem bearings rollers have sticky movement/is rusted/bearing is damaged/uneven seating.	Dismantle steering stem and replace bearings.	
	Steering stem is bent.	Steering stem is bent.	Replace steering stem.	

Symptom	Possible Cause	Diagnosis	How to Fix	Recommended Specification
Vehicle is pulling to one side	Tyre pressures are less/more than recommended.	Front and rear tyre pressures are under/over inflated.	Ensure correct tyre pressures.	**Solo:** Front tyre: 41 psi/2.88 kg/cm2. Rear tyre: 36 psi/2.53 kg/cm^2. **With Pillion:** Front tyre: 41 psi/2.88 kg/cm2. Rear Tyre: 41 psi/2.88 kg/cm2.
	Wheels alignment is not proper.	Front and rear wheels are not aligned.	Align front and rear wheels correctly.	
	Steering movement is hard.	Steering stem nut is excessively tightened.	Adjust steering stem nut correctly.	
		Steering stem bearings rollers have sticky movement/are rusted/ bearing is damaged/uneven seating.	Dismantle steering stem and replace bearings.	
	Vehicle met with an accident.	Fork main tube is bent.	Dismantle fork legs, check main tube for straightness and replace main tubes.	
		Fork end tubes are damaged.	Dismantle fork legs, check fork ends inside for excessive wear-out and replace.	
		Steering stem is bent.	Replace steering stem	
		Main frame is bent.	Check main frame for impact/bends and replace.	
2. REAR SHOCK ABSORBER/Swing arm RELATED				
Rear suspension is noisy	Rear shock absorbers bushes are worn-out/ damaged.	Shock absorbers have excessive radial/axial play on top/bottom mounting bolts due to bush damage.	Replace both shock absorbers as a set.	
	Rear shock absorbers are misaligned.	Top/bottom mounting locations of shock absorbers are misaligned.	Check top and bottom mounting points for any misalignment. Replace Swing arm if it is bent.	
	Rear Swing arm bushes are defective.	Rear Swing arm bushes are rusted/jammed.	Replace Swing arm bushes and axle.	
Rear suspension is too soft	Shock absorber spring is preloaded at Min position.	Rear shock absorber spring preload is adjusted to soft position.	Adjust shock absorber spring preload evenly on both LH and RH side for the desired riding comfort and road conditions.	
	Shock absorbers are weak.	Rear shock absorbers have oil leakage/springs are very soft.	Replace both shock absorbers as a set.	
	Rear Swing arm bushes are defective.	Rear Swing arm bushes are worn-out.	Replace Swing arm bushes and axle.	

Symptom	Possible Cause	Diagnosis	How to Fix	Recommended Specification
Rear suspension is too hard	Shock absorbers spring is preloaded at Max position.	Rear shock absorbers spring preload is adjusted to maximum hard position.	Adjust shock absorber spring preload evenly on both LH and RH side for desired riding comfort and road conditions.	
	Shock absorbers are defective.	Rear shock absorbers compression is very hard.	Replace both shock absorbers as a set.	
	Rear Swing arm bushes are defective.	Rear Swing arm bushes are rusted/jammed .	Replace Swing arm bushes and axle.	
Rear tyre worn-out on one side	Rear shock absorbers spring preload adjustment is mismatching between LH and RH shock absorbers.	Spring preload adjustments are not at same position on LH & RH shock absorbers.	Adjust shock absorber spring preload evenly on both LH and RH side for desired riding comfort and road conditions.	
	Rear wheel bearings are defective.	Rear wheel bearings are worn-out/have excessive side play.	Replace wheel bearings.	
	Rear Swing arm is defective.	Rear Swing arm is bent (LH & RH arms not at same level).	Replace Swing arm assembly.	
Vehicle skids when rear brake is applied	Wheels alignment is not proper.	Front and rear wheels are not aligned.	Align front and rear wheels.	
	Rear wheel bearings are defective.	Rear wheel bearings are worn-out/have excessive side play.	Replace wheel bearings.	
	Rear shock absorbers spring preload adjustment is mismatching between LH and RH shock absorbers.	Spring preload adjustments are not at same position on LH & RH shock absorbers.	Adjust shock absorber spring preload evenly on both LH and RH side for desired riding comfort and road conditions.	
	Rear Swing arm bushes are defective.	Rear Swing arm bushes are worn-out.	Replace Swing arm bushes and axle.	
	Rear Swing arm is defective/rubbing on frame on one side.	Rear Swing arm is bent (LH & RH arms are not at same level).	Replace Swing arm assembly.	
Rear Swing arm has excessive side play	Rear Swing arm mounting to frame is loose.	Rear Swing arm axle nut is loose.	Check and correct Swing arm alignment to frame and tighten Swing arm mountings.	
	Rear Swing arm bushes are defective	Rear Swing arm bushes are rusted/jammed.	Replace Swing arm bushes and axle.	
3. TYRES RELATED				
Rear tyre is worn-out on one side.	Improper wheel alignment.	Rear wheel is misaligned with respect to front wheel.	Check and correct wheel alignment.	

Symptom	Possible Cause	Diagnosis	How to Fix	Recommended Specification
Tyre wearing out unevenly/ vehicle is unstable/ wobbling	Internal defect/poor quality tyre.	Tyres found to have bulges/ cracks in side wall. Threads are separated from the tyre.	Replace with Royal Enfield recommended tyres.	**Solo:** Front tyre: 41 psi/2.88 kg/cm2. Rear tyre: 36 psi/2.53 kg/cm^2. **With Pillion:** Front tyre: 41 psi/2.88 kg/cm2. Rear Tyre: 41 psi/2.88 kg/cm2.
	Tyre seating on rims is improper.	Tyre bead is uneven at the rim surface.	Remove tyre and reassemble correctly.	
	Wheel rims have a defect.	Wheel rims are bent/have excessive run-out.	Remove tyre. Carry out proper wheel truing.	
	Rims have excessive side play.	Wheel bearings are worn-out/have excessive play.	Remove and replace wheel bearings.	
4. WHEEL RIMS RELATED				
Vehicle is unstable/ wobbling	Tyre seating on rims is improper.	Tyre bead is uneven at the rim surface.	Remove tyre and reassemble correctly.	
	Wheel rims are out of trueness.	Wheel rims are bent/have excessive run-out.	Remove tyre and true the wheel rim correctly.	
	Wheel rims have a crack/heavy damage.	Wheel rims are cracked/ damaged due to impact.	Replace with Royal Enfield genuine wheel rims.	
	Spokes are broken	One/several spokes are broken.	Replace spokes and correct wheel trueness.	
	Wheels have excessive axial/side play.	Wheel bearings are worn-out.	Remove bearing and replace.	
	Hubs front/rear are cracked/damaged.	Wheel hubs are damaged due to impact.	Replace with Royal Enfield genuine hubs.	

VEHICLE TROUBLESHOOTING

CONTENTS PAGE

6.10. Troubleshooting 501

6.10.1. Air Filter 501

6.10.2. Control Cables 502

6.10.3. Handlebar 504

6.10.4. Exhaust Pipes and Silencers 505

6.10.5. Wheels 506

6.10.6. Suspension 508

6.10. Troubleshooting

6.10.1. Air Filter

Symptom	Possible Cause	Diagnosis	How to Fix	Recommended Specification
Air induction noise from air filter box is high	Air filter element cover not sealing properly on air filter box assembly	Air filter element cover not seated properly on air filter box assembly/ improperly tightened	Check proper seating of the air filter element cover on air filter box assembly	
	Air filter element cover cracked	Air filter element cover cracked due to improper assembly/over tightened	Replace air filter box assembly	
	Air filter box assembly cracked/damaged	Air filter box assembly not aligned properly and tightened/damaged due to stone hit	Replace air filter box assembly	
	Hoses connecting to inlet manifold cracked	Cracked due to age hardening/improper assembly	Replace air filter box assembly	
Engine running very sluggish and pick up poor	Filter element choked	Filter element choked with dirt/water/oil	Check and replace filter element	
Engine misfiring/ running lean/idling improper	Rubber hoses connecting from air filter box assembly to IACV, iac, throttle body, cracked/disconnected/ not sealing properly	Check and inspect each hose for no damage/ cracks/proper fitting	Check and replace hose/s, and/or air filter body as required	
	Filter element damaged	Damaged due to mishandling/heavy particles entering air filter box assembly	Check and replace filter element	
	IAT sensor not sealing properly	Iat sensor sealing gasket damaged/mounting screws loose	Check and replace iat sensor gasket/sensor	
	IACV not sealing properly	IACV sealing gasket damaged/mounting screws loose	Check and replace IACV gasket/sensor	

Symptom	Possible Cause	Diagnosis	How to Fix	Recommended Specification
Engine oil accumulation inside air filter box assembly	Excessive oil in sump	Check and maintain correct engine oil level	Clean breather chamber and hose leading to air filter box assembly	

6.10.2. Control Cables

Symptom	Possible Cause	Diagnosis	How to Fix	Recommended Specification
Clutch lever movement not smooth	Clutch lever operation at handlebar end is sticky	Clutch lever, bracket and pivot screw at handlebar end is dry without lubrication/excessive dirt accumulation	Clean and lubricate clutch lever, bracket and pivot screw at handlebar end	
	Clutch lever excessive movement in handlebar bracket LH	Clutch lever mounting hole is out of shape/fixing bolt worn-out	Check and replace clutch lever bracket assembly	
	Inner cable movement sticky in outer cable	Inner cable strands broken and jammed inside outer cable/clutch lever bracket	Check and replace clutch cable	
		Teflon tube inside outer cable torn/damaged	Check and replace clutch cable	
	Clutch shaft movement sticky in cover RH	Poor/no lubrication of the clutch shaft in cover RH/ uneven wear-out of clutch shaft/cover RH	Check and replace clutch shaft/cover RH	
	Clutch plates movement in clutch housing is sticky	Clutch plates/clutch housing damaged	Check and replace clutch plates/clutch assembly	

Symptom	Possible Cause	Diagnosis	How to Fix	Recommended Specification
Clutch operation hard	Clutch lever movement in bracket hard	Clutch lever, bracket and pivot screw at handlebar end is dry without lubrication/excessive dirt accumulation	Clean and lubricate clutch lever, bracket and pivot screw at handlebar end	
	Inner cable movement sticky in outer cable	Inner cable strands broken and jammed inside outer cable/clutch lever bracket	Check and replace clutch cable	
		Teflon tube inside outer cable torn/damaged	Check and replace clutch cable	
	Clutch shaft movement hard in cover RH	Poor/no lubrication of the clutch shaft in cover RH/ uneven wear-out of clutch shaft/cover RH	Check and replace clutch shaft/cover RH	
	Clutch plates burnt and hard	Clutch plates burnt/hard/ clutch housing damaged	Check and replace clutch plates/clutch assembly	
Throttle rotor movement sticky/ opening hard	Throttle cables are stuck between frame and fuel tank	Throttle cables stuck/ jammed between frame and fuel tank	Check cable routing and proper strapping to frame	
	Throttle rotor movement in housing is sticky	Throttle rotor area in the housing is dry/heavy dirt accumulation	Check and lubricate throttle rotor and housing in handlebar	
	Throttle rotor cable seating area damaged	The eyelets in the throttle rotor are damaged/inner cable eyelets not seating correctly in the rotor eyelets	Check and replace throttle cables/throttle rotor	
	Inner cables movement sticky in outer cable	Throttle cables inner strands broken	Check and replace throttle cables	
		Teflon coating in between inner/outer throttle cables damaged		

6.10.3. Handlebar

Symptom	Possible Cause	Diagnosis	How to Fix	Recommended Specification
Vibrations transmitted to rider while riding	Tyre pressures are more than recommended.	Improper front and rear tyre pressures.	Ensure correct tyre pressures.	**Solo:** Front tyre: 41 psi/2.88 kg/cm2. Rear tyre: 36 psi/2.53 kg/cm^2. **With Pillion:** Front tyre: 41 psi/2.88 kg/cm2. Rear Tyre: 41 psi/2.88 kg/cm2.
	Handlebar balancers are loose.	Balancer mountings are loose/threads are worn-out.	Tighten balancer mountings/replace balancers.	
	Continental GT 650 twin: Clip-on pinch bolts are loose on fork main tubes. Interceptor 650 Twin: Handlebar clamp fasteners are loose on top yoke.	Fasteners loose/ threads worn-out	Check and tighten fasteners/replace fasteners/handlebar clip-ons/top yoke	
	Handlebar is cracked at mounting location.	Clip-on/handlebar clamping locations has minor cracks.	Replace clip-ons/ handlebar	
Uneasiness/pain felt on one shoulder	Continental GT 650 twin: Clip-on/s are bent. Interceptor 650 Twin: Handlebar is bent/misaligned.	One or the other clip-on is bent/ handlebar is bent. Handlebar alignment dots are not correct.	Replace clip-ons/ handlebar. Ensure correct positioning of the handlebar alignment dots with respect to top yoke.	

6.10.4. Exhaust Pipes and Silencers

Symptom	Possible Cause	Diagnosis	How to Fix	Recommended Specification
Vibration/rattling noise from exhaust pipe/s.	Exhaust pipe mounting to cylinder head LH/RH is loose.	Exhaust pipe/s flange mounting to cylinder head is loose/flange is cracked.	Check and tighten flange mounting to torque. Replace exhaust pipe if flange is cracked.	Torque: 25 N-m/2.5 kgf-m
	Exhaust pipe mounting to frame LH/RH is loose.	Fasteners are loose/ mounting clamps are cracked.	Check and tighten fasteners to torque. Replace clamps if they are cracked.	Torque: 25 N-m/2.5 kgf-m
Vibration/rattling noise from silencer/s.	Silencer mounting to frame LH/RH is loose.	Fasteners are loose/mounting clamps are cracked.	Check and tighten fasteners to torque Replace clamps/ silencer if they are cracked.	Torque: 25 N-m/2.5 kgf-m
	Internal baffles in silencer are broken.	Remove silencer and shake to check if internal baffles are cracked.	Replace silencer assembly.	
Exhaust leak from cylinder head joint/ silencer joint.	Gaskets are burnt/ missing.	Gaskets are burnt-out due to loose clamping of exhaust pipe/ silencer.	Replace exhaust pipe/silencer gaskets.	

6.10.5. Wheels

Symptom	Possible Cause	Diagnosis	How to Fix	Recommended Specification
1. Tyres Related				
Centre Threads Wear-Out Is High/ Poor Traction/ Unstable Riding	Tyre pressure is more than recommended.	Front and rear tyre pressure is over inflated.	Ensure correct tyre pressures.	**Solo:** Front tyre: 41 psi/2.88 kg/cm2. Rear tyre: 36 psi/2.53 kg/cm^2. **With Pillion:** Front tyre: 41 psi/2.88 kg/cm2. Rear Tyre: 41 psi/2.88 kg/cm2.
Side Threads Wear-Out Is High/Side Wall Has Cracks/ Motorcycle Has Dragging/Unstable Riding	Tyre pressures is less than recommended.	Front and rear tyre pressures under inflated side walls have minute cracks.	Check inner tubes for any puncture/ leaky valve pins ensure correct tyre pressures.	**Solo:** Front tyre: 41 psi/2.88 kg/cm2. Rear tyre: 36 psi/2.53 kg/cm^2. **With Pillion:** Front tyre: 41 psi/2.88 kg/cm2. Rear Tyre: 41 psi/2.88 kg/cm2.
Rear Tyre Wear-Out On One Side	Improper wheel alignment.	Rear wheel misaligned with respect to front wheel.	Check and correct wheel alignment.	

Symptom	Possible Cause	Diagnosis	How to Fix	Recommended Specification
Tyre/S Wearing Out Is Uneven/ Motorcycle Is Unstable/Wobbling	Internal defect/poor quality tyre.	Tyres found to have bulges/cracks in side wall. Threads are separated from the tyre.	Replace with Royal Enfield recommended tyres.	**Front tyre:** 100/90-19 M/C 57H CEAT ZOOM CRUZ Z F TL (Tubeless tyre) **Rear tyre:** 150/80B16 M/C 71H CEAT ZOOM CRUZ Z F TL (Tubeless tyre)
	Tyre seating on rims is improper.	Tyre bead is uneven at the rim surface.	Remove tyre and reset correctly.	
	Wheel rims have a defect.	Wheel rims are bent/ have excessive run-out.	Remove tyre and carry out proper wheel truing.	
	Rims have excessive side play.	Wheel bearings worn-out/excessive play.	Remove and replace wheel bearings.	
2. Wheel Rims Related				
Motorcycle Is unstable/Wobbling	Tyre seating on rims is improper	Tyre bead is uneven at the rim surface	Remove tyre and reset correctly	
	Wheel rims are out of trueness	Wheel rims are bent/ have excessive run-out	Remove tyre and true the wheel rim correctly	
	Wheel rims have a crack/heavy damage	Wheel rims are cracked/damaged due to impact	Replace with royal enfield genuine wheel rims	
3. Others				
Motorcycle Is unstable/Wobbling	Spokes are Broken	One/several spokes are broken	Replace spokes and correct wheel trueness	
	Wheels have excessive axial/side play	Wheel bearings are worn-out	Remove bearing and replace	
	Hubs Front/rear are cracked/damaged	Wheel Hubs are damaged due to impact	Replace with Royal Enfield genuine hubs	

6.10.6. Suspension

Symptom	Possible Cause	Diagnosis	How to Fix	Recommended Specification
1. Front Fork/Steering Stem Related				
Oil leak from fork assembly LH/RH	Excessive oil is filled.	Excessive oil is filled in fork legs.	Dismantle fork legs, drain oil and fill correct recommended oil quantity.	
	Oil leaks from top cap nut.	Cap nuts are loose/sealing washer is damaged.	Tighten Cap nuts/replace sealing washer.	
	Oil leaks between main tube and guide tube is faulty.	Oil seals are worn-out or not seated evenly/loose in guide tubes.	Dismantle fork legs and replace oil seals.	
	Oil leaks from guide tube bottom.	Oil leaks from Hex socket bolt at the bottom of guide tube.	Dismantle fork legs and replace sealing washer bottom and reassemble.	
Hitting noise from front fork/s	Oil quantity is less in one/both fork legs.	Oil quantity mismatched between LH and RH fork assemblies.	Dismantle fork legs, drain oil and fill with correct recommended quantity.	
	Fork main springs have become soft/ coils are broken/ length is reduced.	Fork main springs have lost tension/Overall length of the main springs is reduced/coils are broken.	Dismantle fork legs and replace fork main springs.	
	Rebound spring has become soft/broken/ length is reduced.	Rebound springs have lost tension/overall length is reduced/coils are broken.	Dismantle fork legs and replace rebound springs.	
	Taper oil lock is not seated properly/is loose on piston tube.	Taper oil lock is seated unevenly/loose in piston tube/hex socket bolt at fork end bottom is loose.	Dismantle fork leg assemblies, check for uneven seating/loose fittings and replace taper oil lock/fork piston assembly.	
Fork action is soft	Oil quantity is less in one/both fork legs.	Oil quantity mismatched between LH and RH fork assemblies.	Dismantle fork legs, drain out oil and fill with correct recommended quantity.	
	Fork main springs are soft/coils are broken/ length is reduced.	Fork main springs have lost tension/overall length of main springs is reduced/coils are broken.	Dismantle fork legs and replace fork main springs.	
Fork action is hard	Excessive oil is filled in fork assembly LH/RH.	Excessive oil is filled in the fork legs.	Dismantle fork legs, drain oil and fill with correct recommended quantity.	
	Fork main tube movement in fork ends is sticky.	Fork main tube is bent.	Dismantle fork legs, check main tube for straightness and replace main tubes.	
		Fork end tubes are damaged.	Dismantle fork legs, check fork ends inside for excessive wear-out.	

Symptom	Possible Cause	Diagnosis	How to Fix	Recommended Specification
Riding is unstable	Tyre seating on rims is improper.	Tyre bead is uneven at the rim surface.	Remove tyre and reassemble correctly.	
	Wheel rims are out of trueness.	Wheel rims are bent/have excessive run-out.	Remove tyre and true the wheel rim correctly.	
	Wheel rims have a crack/heavy damage.	Wheel rims have been cracked/damaged due to impact.	Replace with Royal Enfield genuine wheel rims.	
	Spokes are broken.	One/several spokes are broken.	Replace spokes and correct wheel trueness.	
	Wheels have excessive axial/side play.	Wheel bearings are worn-out	Remove bearing and replace	
	Hubs front/rear are cracked/damaged	Wheel hubs are damaged due to impact.	Replace with Royal Enfield genuine hubs.	
	Oil quantity is mismatching in LH and RH fork legs.	Oil quantity mismatched between LH and RH fork assemblies.	Dismantle fork legs, drain oil and fill with correct recommended quantity.	
	Fork main springs have become soft/ coils are broken/ length is reduced.	Fork main springs have lost tension/Overall length of the main springs is reduced/coils are broken.	Dismantle fork legs and replace fork main springs.	
	Fork main tube movement in fork end is sticky.	Fork main tube is bent.	Dismantle fork legs, check main tube for straightness and replace main tubes.	
		Fork end tubes are damaged.	Dismantle fork legs, check fork ends inside for excessive wear-out and replace.	
	Steering stem movement is not smooth.	Control cables/wiring harness is not routed properly.	Route the control cables/ wiring harness correctly and strap to frame.	
		Steering stem nut is excessively tightened.	Adjust the steering stem nut correctly.	
		Steering stem bearings rollers have sticky movement/is rusted/bearing is damaged/uneven seating.	Dismantle steering stem and replace bearings.	
	Steering stem is bent.	Steering stem is bent.	Replace steering stem.	

Symptom	Possible Cause	Diagnosis	How to Fix	Recommended Specification
Vehicle is pulling to one side	Tyre pressures are less/more than recommended.	Front and rear tyre pressures are under/over inflated.	Ensure correct tyre pressures.	**Solo:** Front tyre: 41 psi/2.88 kg/cm2. Rear tyre: 36 psi/2.53 kg/cm^2. **With Pillion:** Front tyre: 41 psi/2.88 kg/cm2. Rear Tyre: 41 psi/2.88 kg/cm2.
	Wheels alignment is not proper.	Front and rear wheels are not aligned.	Align front and rear wheels correctly.	
	Oil quantity is mismatching in LH and RH fork legs.	Oil quantity is mismatched between LH and RH fork assemblies.	Dismantle fork legs, drain out the oil and fill with correct recommended quantity.	
	Fork main springs have become soft/ coils are broken/ length is reduced.	Fork main springs have lost tension/Overall length of the main springs is reduced/coils are broken.	Dismantle fork legs and replace fork main springs.	
	Steering movement is hard.	Steering stem nut is excessively tightened.	Adjust steering stem nut correctly.	
		Steering stem bearings rollers have sticky movement/are rusted/ bearing is damaged/uneven seating.	Dismantle steering stem and replace bearings.	
	Vehicle met with an accident.	Fork main tube is bent.	Dismantle fork legs, check main tube for straightness and replace main tubes.	
		Fork end tubes are damaged.	Dismantle fork legs, check fork ends inside for excessive wear-out and replace.	
		Steering stem is bent.	Replace steering stem	
		Main frame is bent.	Check main frame for impact/bends and replace.	
2. Rear Shock Absorber/Swingarm Related				
Rear suspension is noisy	Rear shock absorbers bushes are worn-out/ damaged.	Shock absorbers have excessive radial/axial play on top/bottom mounting bolts due to bush damage.	Replace both shock absorbers as a set.	
	Rear shock absorbers are misaligned.	Top/bottom mounting locations of shock absorbers are misaligned.	Check top and bottom mounting points for any misalignment. Replace swingarm if it is bent.	
	Rear swingarm bushes are defective.	Rear swingarm bushes are rusted/jammed.	Replace swingarm bushes and axle.	

Symptom	Possible Cause	Diagnosis	How to Fix	Recommended Specification
Rear suspension is too soft	Shock absorber spring is preloaded at Min position.	Rear shock absorber spring preload is adjusted to soft position.	Adjust shock absorber spring preload evenly on both LH and RH side for the desired riding comfort and road conditions.	
	Shock absorbers are weak.	Rear shock absorbers have oil leakage/springs are very soft.	Replace both shock absorbers as a set.	
	Rear swingarm bushes are defective.	Rear swingarm bushes are worn-out.	Replace swingarm bushes and axle.	
Rear suspension is too hard	Shock absorbers spring is preloaded at Max position.	Rear shock absorbers spring preload is adjusted to maximum hard position.	Adjust shock absorber spring preload evenly on both LH and RH side for desired riding comfort and road conditions.	
	Shock absorbers are defective.	Rear shock absorbers compression is very hard.	Replace both shock absorbers as a set.	
	Rear swingarm bushes are defective.	Rear swingarm bushes are rusted/jammed .	Replace swingarm bushes and axle.	
Rear tyre worn-out on one side	Rear shock absorbers spring preload adjustment is mismatching between LH and RH shock absorbers.	Spring preload adjustments are not at same position on LH & RH sock absorbers.	Adjust shock absorber spring preload evenly on both LH and RH side for desired riding comfort and road conditions.	
	Rear wheel bearings are defective.	Rear wheel bearings are worn-out/have excessive side play.	Replace wheel bearings.	
	Rear swingarm is defective.	Rear swingarm is bent (LH & RH arms not at same level).	Replace swingarm assembly.	
Vehicle skids when rear brake is applied	Wheels alignment is not proper.	Front and rear wheels are not aligned.	Align front and rear wheels.	
	Rear wheel bearings are defective.	Rear wheel bearings are worn-out/have excessive side play.	Replace wheel bearings.	
	Rear shock absorbers spring preload adjustment is mismatching between LH and RH shock absorbers.	Spring preload adjustments are not at same position on LH & RH sock absorbers.	Adjust shock absorber spring preload evenly on both LH and RH side for desired riding comfort and road conditions.	
	Rear swingarm bushes are defective.	Rear swingarm bushes are worn-out.	Replace swingarm bushes and axle.	
	Rear swingarm is defective/rubbing on frame on one side.	Rear swingarm is bent (LH & RH arms are not at same level).	Replace swingarm assembly.	
Rear swingarm has excessive side play	Rear swingarm mounting to frame is loose.	Rear swingarm axle nut is loose.	Check and correct swingarm alignment to frame and tighten swingarm mountings.	
	Rear swingarm bushes are defective	Rear swingarm bushes are rusted/jammed.	Replace swingarm bushes and axle.	

Symptom	Possible Cause	Diagnosis	How to Fix	Recommended Specification
3. Tyres Related				
Rear tyre is worn-out on one side.	Improper wheel alignment.	Rear wheel is misaligned with respect to front wheel.	Check and correct wheel alignment.	
Tyre/s wearing out unevenly/ vehicle is unstable/ wobbling	Internal defect/poor quality tyre.	Tyres found to have bulges/ cracks in side wall. Threads are separated from the tyre.	Replace with Royal Enfield recommended tyres.	**Solo:** Front tyre: 41 psi/2.88 kg/cm2. Rear tyre: 36 psi/2.53 kg/cm^2. **With Pillion:** Front tyre: 41 psi/2.88 kg/cm2. Rear Tyre: 41 psi/2.88 kg/cm2.
	Tyre seating on rims is improper.	Tyre bead is uneven at the rim surface.	Remove tyre and reassemble correctly.	
	Wheel rims have a defect.	Wheel rims are bent/have excessive run-out.	Remove tyre. Carry out proper wheel truing.	
	Rims have excessive side play.	Wheel bearings are worn-out/have excessive play.	Remove and replace wheel bearings.	
4. Wheel Rims Related				
Vehicle is unstable/ wobbling	Tyre seating on rims is improper.	Tyre bead is uneven at the rim surface.	Remove tyre and reassemble correctly.	
	Wheel rims are out of trueness.	Wheel rims are bent/have excessive run-out.	Remove tyre and true the wheel rim correctly.	
	Wheel rims have a crack/heavy damage.	Wheel rims are cracked/ damaged due to impact.	Replace with Royal Enfield genuine wheel rims.	
	Spokes are broken	One/several spokes are broken.	Replace spokes and correct wheel trueness.	
	Wheels have excessive axial/side play.	Wheel bearings are worn-out.	Remove bearing and replace.	
	Hubs front/rear are cracked/damaged.	Wheel hubs are damaged due to impact.	Replace with Royal Enfield genuine hubs.	

FUEL SYSTEM

CONTENTS PAGE

7.1. Fuel System 515

Dismantling 515

7.1.1. Fuel Tank 515

7.1.2. Fuel Pump Connector and Fuel Level Sensor 515

7.1.3. Fuel Hose (Fuel Pump to Injector) 516

7.1.4. EVAP Connections to Fuel Tank 516

7.1.5. Drain Hose 516

7.1.6. Tank support Bracket 516

7.1.7. Fuel Pump 517

7.1.8. Fuel Level Sensor 518

7.1.9. Fuel Tank Cap 518

Inspection 519

7.1.10. Fuel Float 519

7.1.11. Fuel Pump 519

Assembly 519

7.1.12. Fuel Level Sensor 519

7.1.13. Fuel Pump 520

7.1.14. Tank support Bracket 520

7.1.15. Fuel Tank 521

7.1.16. Drain Hose 521

7.1.17. EVAP Connections to Fuel Tank 521

7.1.18. Fuel Hose (Fuel Pump to Injector) 522

7.1.19. Fuel Pump Connector 522

7.1.20. Fuel Tank Cap 523

7.1. Fuel System

⚠ WARNING

Gasoline is extremely flammable and highly explosive. Please handle with care. Improper handling can lead to fatal accident or serious injury. Always drain/fill fuel only in a well ventilated area.

Ensure there is no scope for flames or sparks near by while draining/filling fuel.

⚠ CAUTION

Make sure the fuel pressure is relieved before disconnecting the fuel connection.

⚠ CAUTION

Ensure the motorcycle is upright on a firm and flat surface.

Dismantling

7.1.1. Fuel Tank

- Ensure the ignition and stop switches are in OFF position.
- Remove the fuel tank cap. Drain fuel completely from fuel tank.
- Remove rider seat.
- Remove Pillion seat.
- Loosen and remove 3 Nos **(M5) (a)** allen head screws from LH side throttle body cover.
- Remove LH side throttle body cover **(b)**.

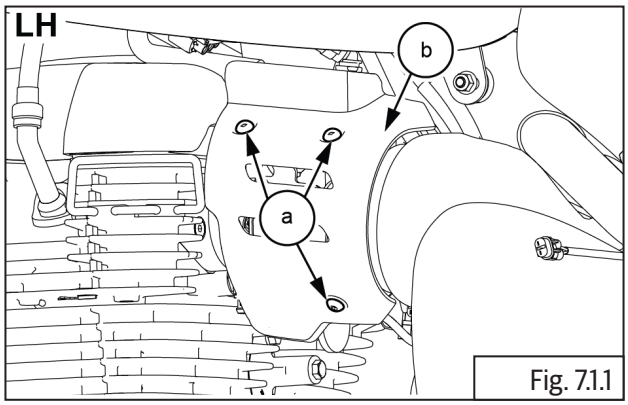

Fig. 7.1.1

	4 mm Allen Socket with Ratchet

- Loosen and remove 1 Nos. Hex head bolt and nut **(M6) (a)** from rear end of fuel tank on frame.

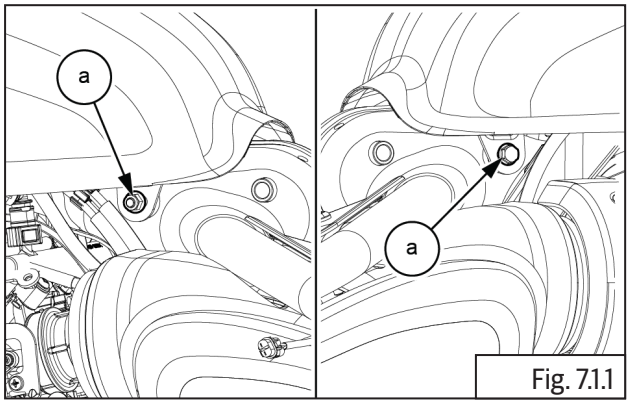

Fig. 7.1.1

	10 mm Socket with Ratchet

7.1.2. Fuel Pump Connector and Fuel Level Sensor

- Gently lift fuel tank **(a)** upwards and pull backwards slightly.

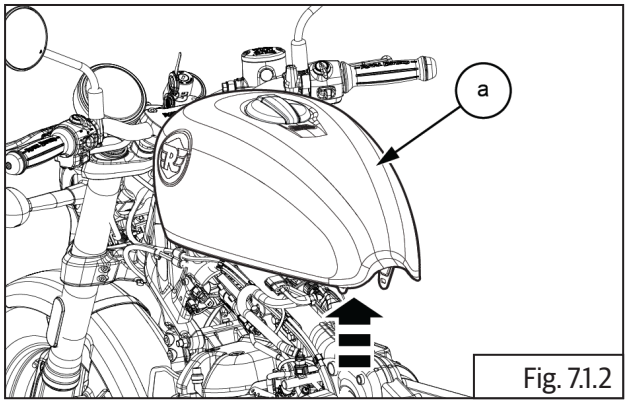

Fig. 7.1.2

- Disconnect fuel pump connector **(a)** from fuel tank **(b)**.

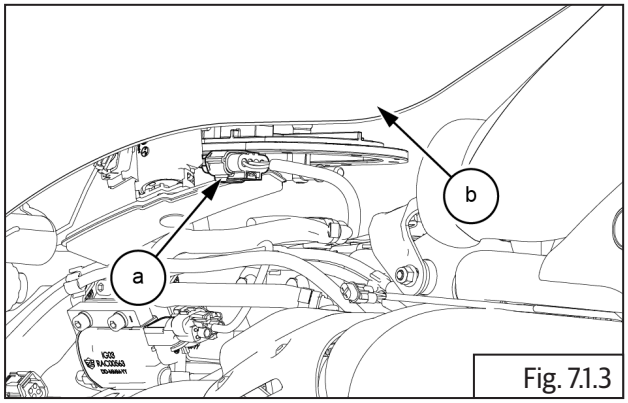

Fig. 7.1.3

⚠ CAUTION

DO NOT lift the tank too much to prevent damage to connectors and brake hoses.

7.1.3. Fuel Hose (Fuel Pump to Injector)

- Clean quick fix adapter area and disconnect by pressing lock button **(a)**.

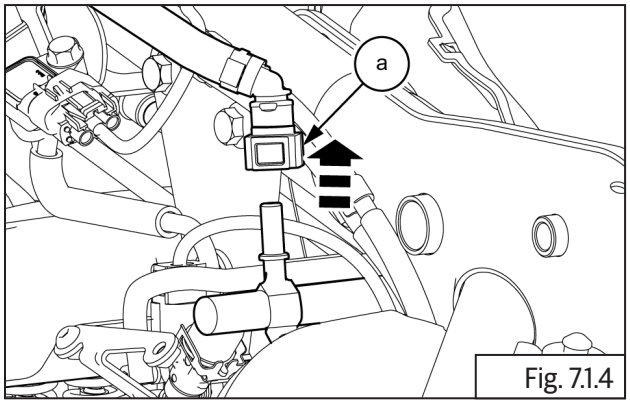

Fig. 7.1.4

- Remove fuel hose **(b)** from fuel rail.

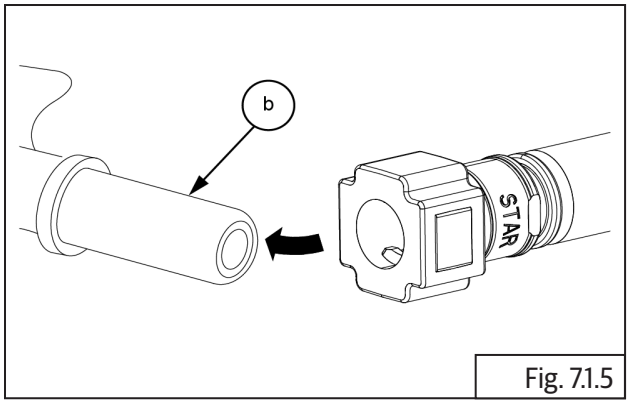

Fig. 7.1.5

7.1.4. EVAP Connections to Fuel Tank

- Disconnect EVAP connection hose **(a)** from bottom of fuel tank.

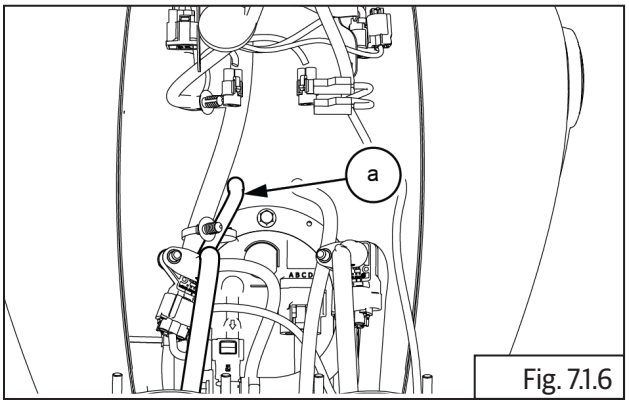

Fig. 7.1.6

7.1.5. Drain Hose

- Disconnect drain hose connection **(a)** from bottom of fuel tank.

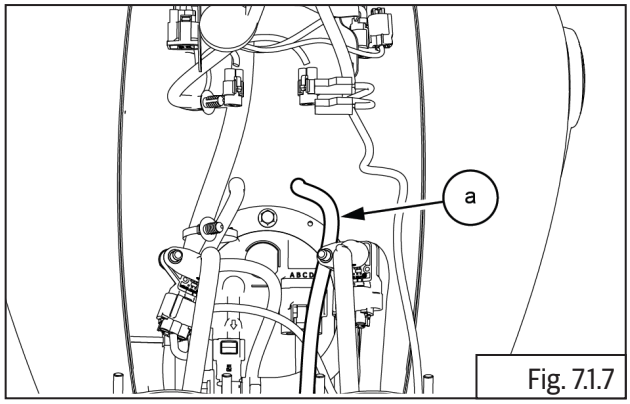

Fig. 7.1.7

- Gently remove fuel tank **(a)** from frame.

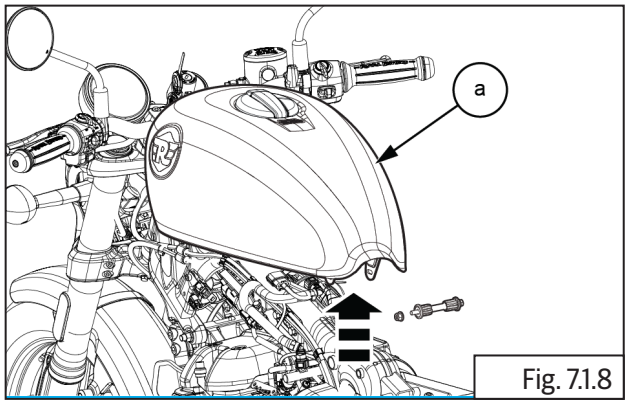

Fig. 7.1.8

7.1.6. Tank support Bracket

- Loosen and remove 3 Nos. Hex nuts **(M5) (a)** from rear mounting bracket.

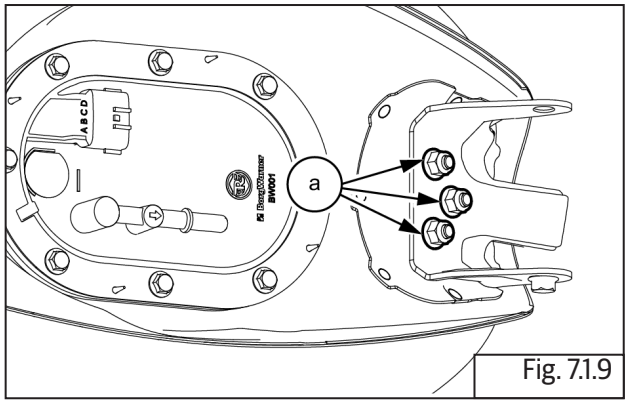

Fig. 7.1.9

	10 mm Socket with Ratchet

- Remove rear mounting bracket **(a)** from fuel tank.

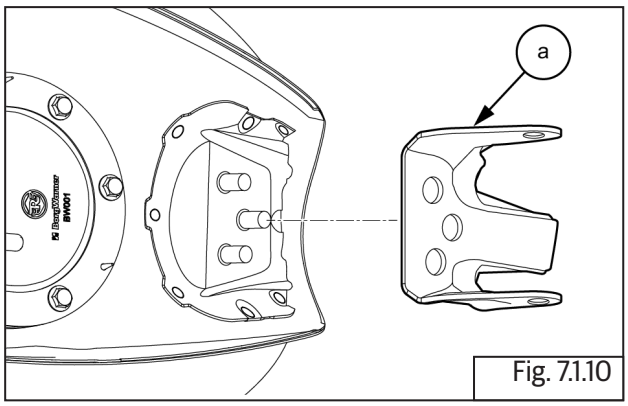

Fig. 7.1.10

- Remove top hat **(c)** with spacer **(a)** with grommet **(b)** from chassis frame

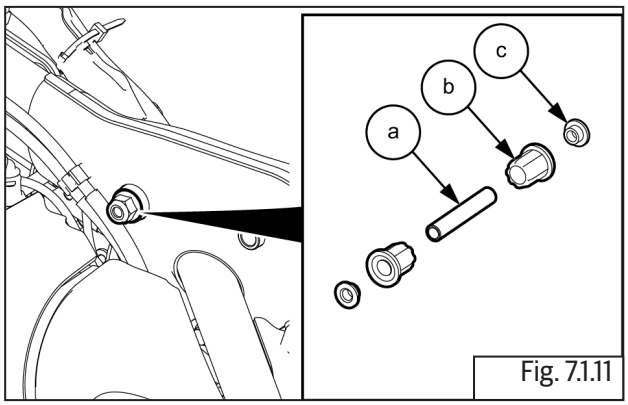

Fig. 7.1.11

- Remove LH and RH tank damper **(a)** from chassis frame.

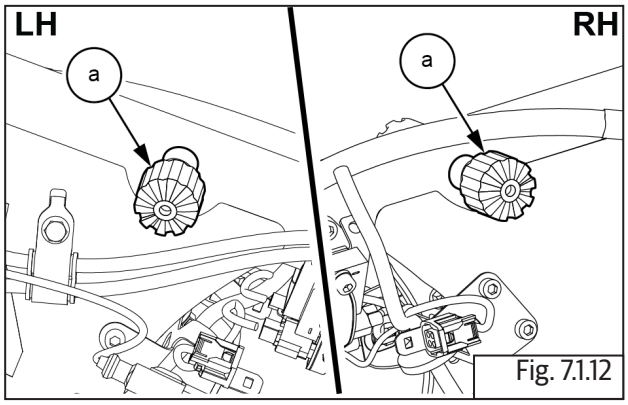

Fig. 7.1.12

7.1.7. Fuel Pump

- Loosen and remove 8 Nos. Hex socket head bolts **(M5) (a)** from fuel pump.

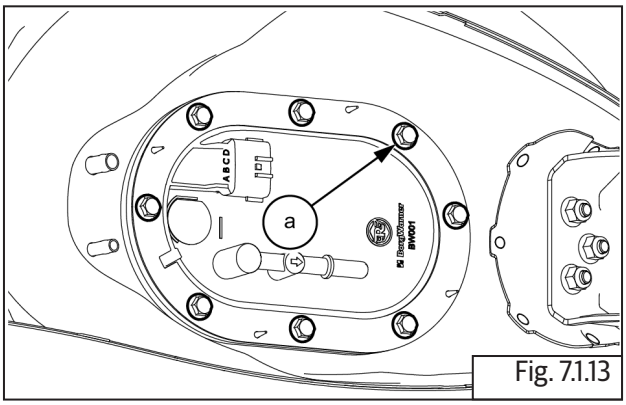

Fig. 7.1.13

	10 mm Socket with Ratchet

- Gently pull out the fuel pump **(a)** from fuel tank **(b)**.

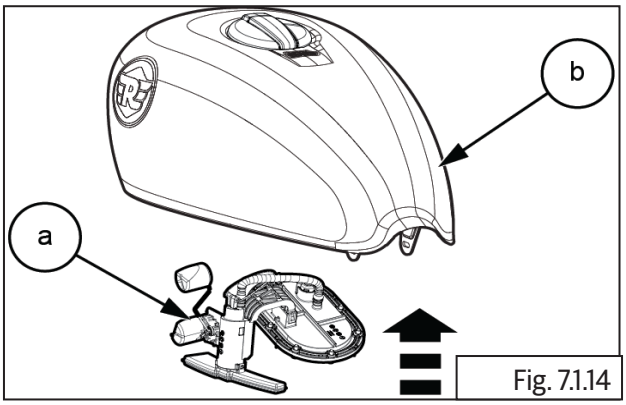

Fig. 7.1.14

- Remove O-rings **(b)** and plate **(a)** from fuel pump.

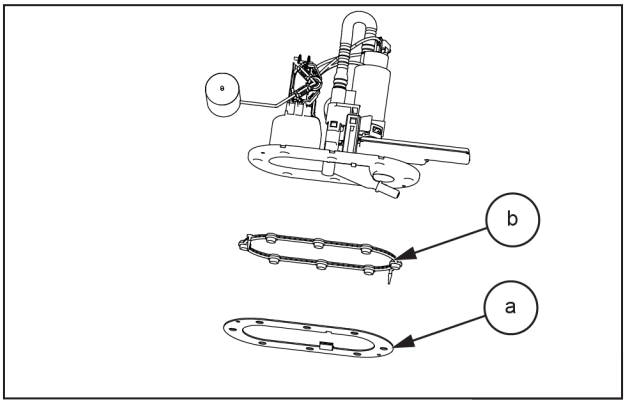

7.1.8. Fuel Level Sensor

- Lift connector lock **(a)** and remove the coupler **(b)**.

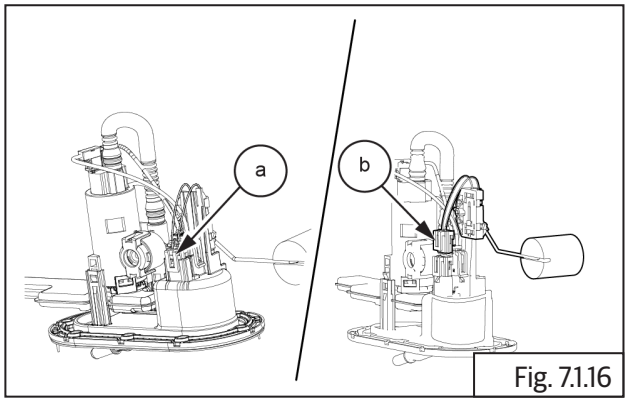

Fig. 7.1.16

- Remove the fuel level sensor **(a)** from fuel pump.

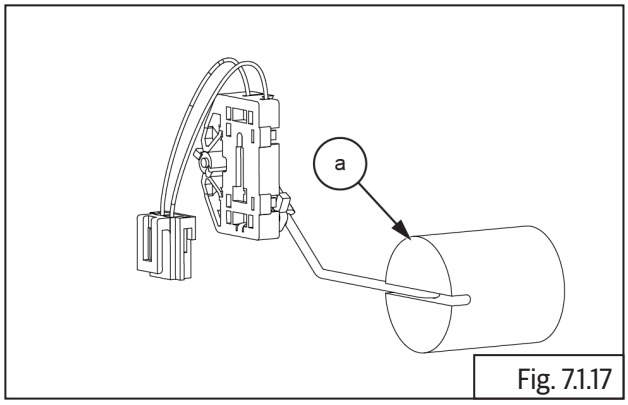

Fig. 7.1.17

⚠ CAUTION

Make sure the dust in the stainer does not enter the fuel pump.

7.1.9. Fuel Tank Cap

- Lift key flap **(a)** on fuel tank and insert key turn clock wise to open.

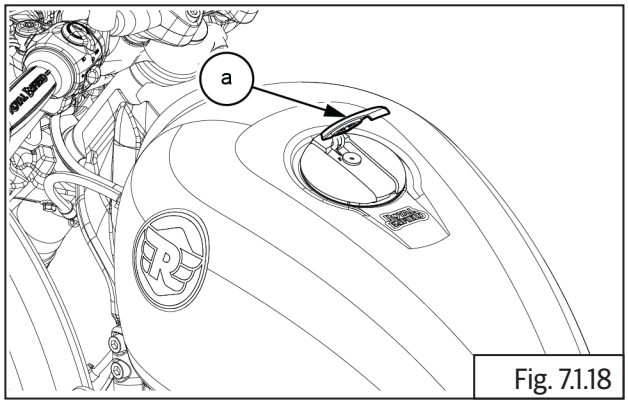

Fig. 7.1.18

- Loosen and remove 2 Nos. Hex allen head screws **(M5) (a)**.from fuel tank cap.

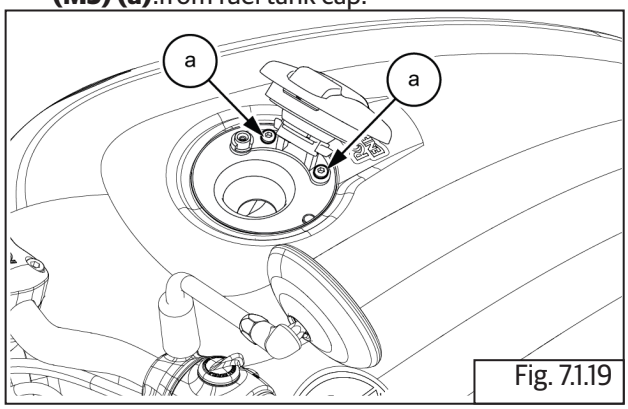

Fig. 7.1.19

	4 mm Allen socket with Ratchet

- Remove the fuel tank cap **(a).**

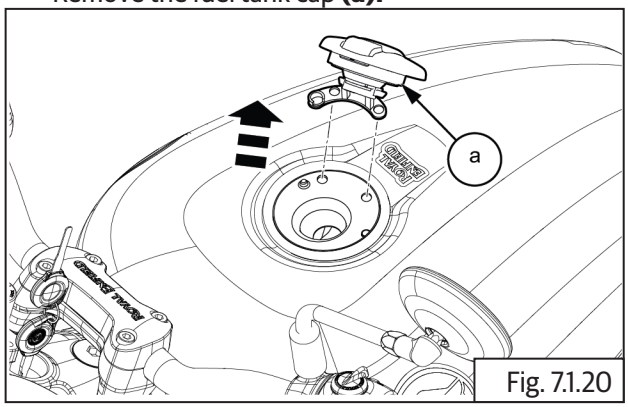

Fig. 7.1.20

Inspection

7.1.10. Fuel Float

- Check resistance at float unit pins at lower position.
- Check the resistance at float unit pins at higher position.
- Inspect float assembly for fuel ingress. Replace if fuel float assembly is punctured.

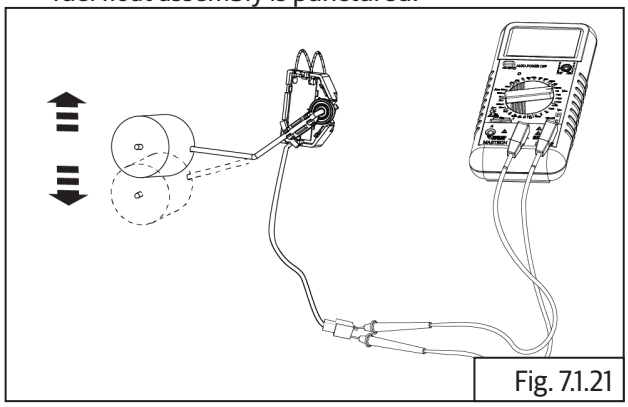
Fig. 7.1.21

7.1.11. Fuel Pump

- Check resistances at fuel pump **(a)** terminals **(b)**. Replace if resistances are out of specifications.

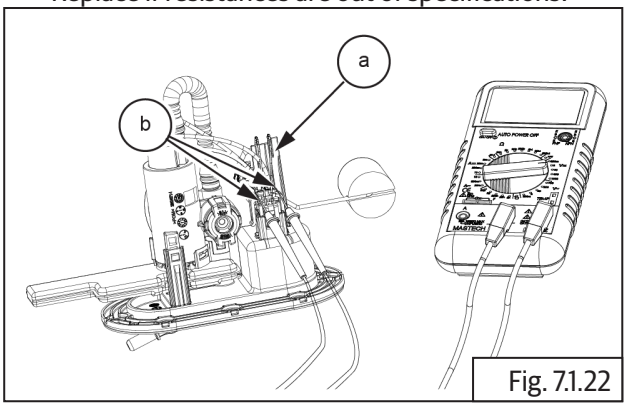

Fig. 7.1.22

Assembly

7.1.12. Fuel Level Sensor

⚠ CAUTION

Ensure assembly of new seal every time after dismantling, to prevent leakage.

- Gently insert the Fuel level sensor **(a)** in the downwards direction till you hear a click sound.

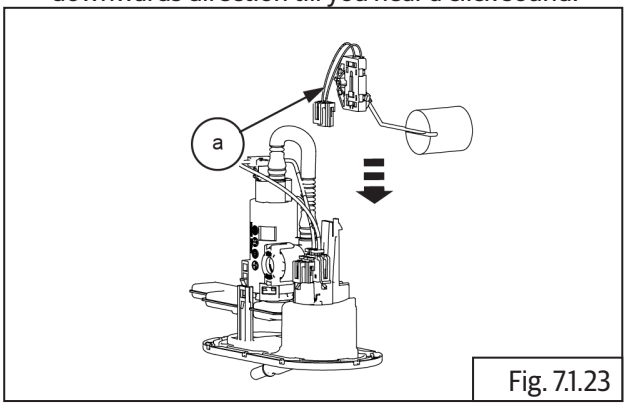

Fig. 7.1.23

- Connect the fuel level sensor coupler **(a)** in the frame **(b)**.

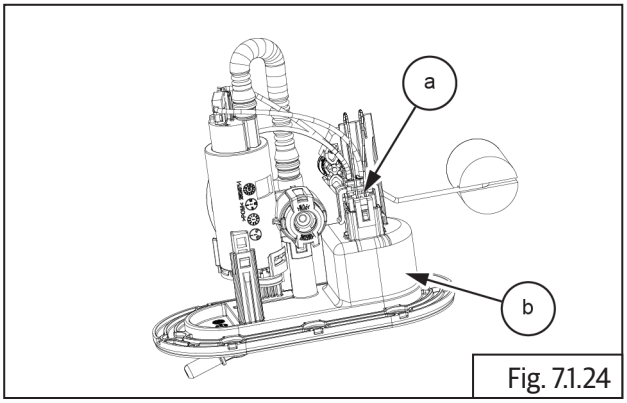

Fig. 7.1.24

⚠ CAUTION

Ensure assembly of new seal every time after dismantling, to prevent leakage.

7.1.13. Fuel Pump

- Locate O-rings **(b)** and plate **(a)** into the fuel pump. Ensure it is seated properly.

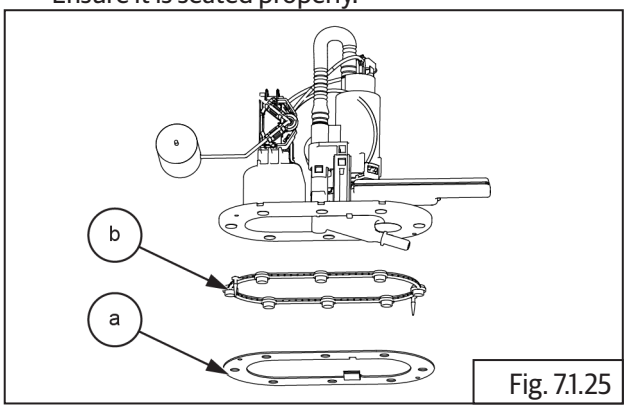

Fig. 7.1.25

- Assemble fuel pump **(a)** into tank **(b)** with outlet pipes facing towards rear of the tank.

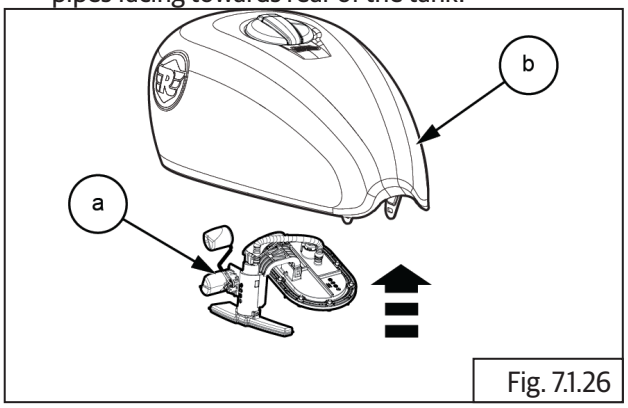

Fig. 7.1.26

- Locate and tighten 8 Nos. Hex socket head bolts **(M5) (a)** to assemble fuel pump **(b)** on fuel tank **(c)**.

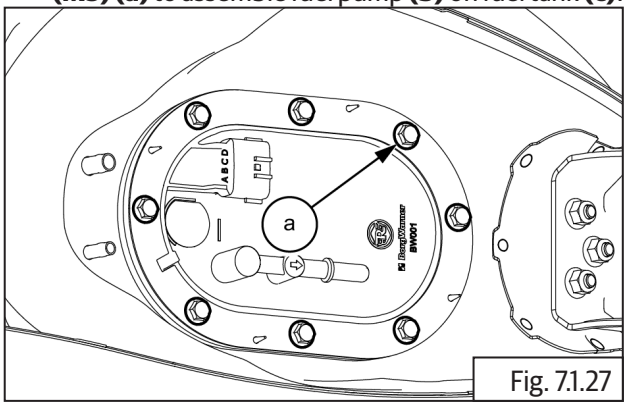

Fig. 7.1.27

	10 mm Socket with Ratchet
Torque	5 N-m / 5.0 kgf-m

7.1.14. Tank support Bracket

- Press and fix LH and RH tank damper **(a)** on chassis frame.

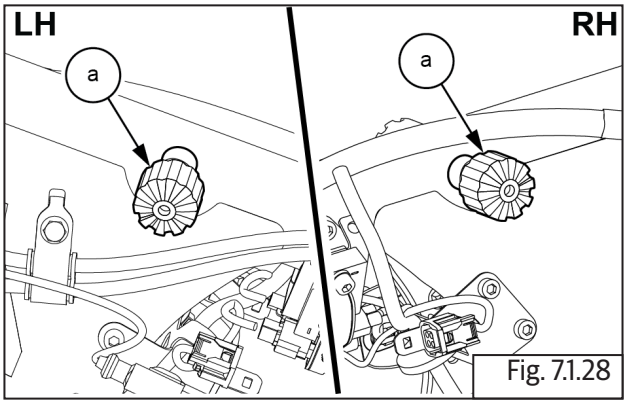

Fig. 7.1.28

- Press and fix hat **(c)** with spacer **(a)** with grommet **(b)** on chassis frame

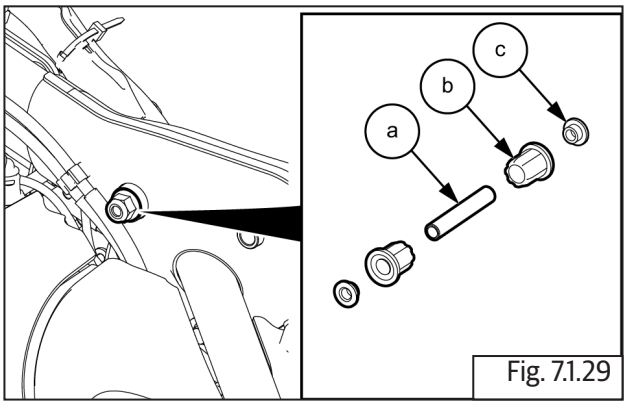

Fig. 7.1.29

- Locate and align the holes on mounting bracket **(a)** into fuel tank

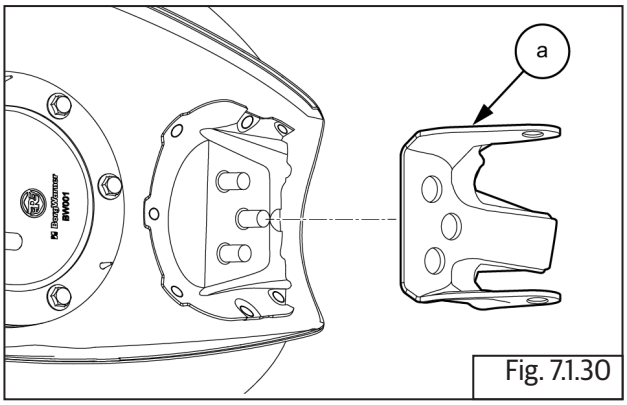

Fig. 7.1.30

- Locate and tighten 3 Nos. Hex nuts **(M5) (a)** on rear mounting bracket.

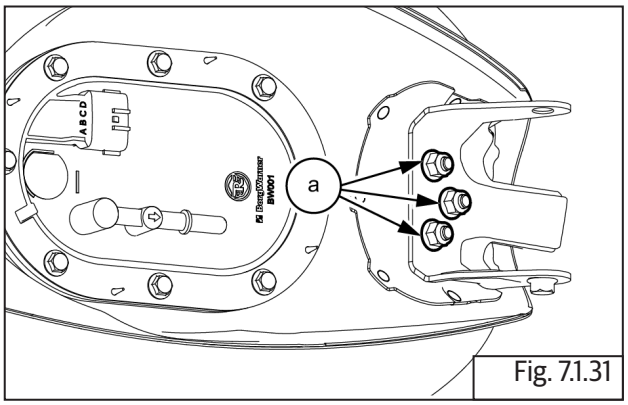

Fig. 7.1.31

	10 mm Socket with Ratchet
Torque	10 N-m / 1.0 kgf-m

7.1.15. Fuel Tank

- Hold and slide fuel tank **(a)** into frame guide and ensure bush in fuel tank are aligned into guide in frame.

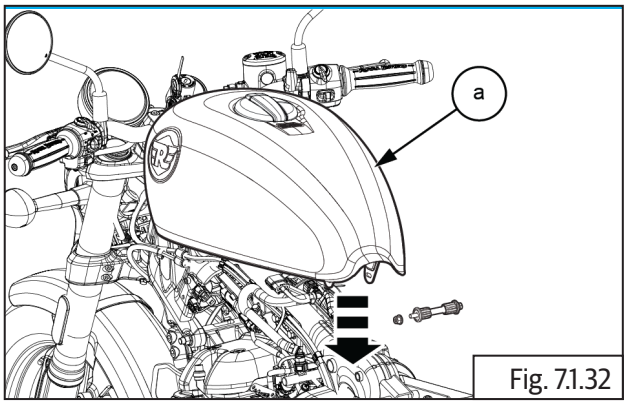

Fig. 7.1.32

7.1.16. Drain Hose

- Gently lift fuel tank and connect drain hose connection **(a)** to fuel tank .

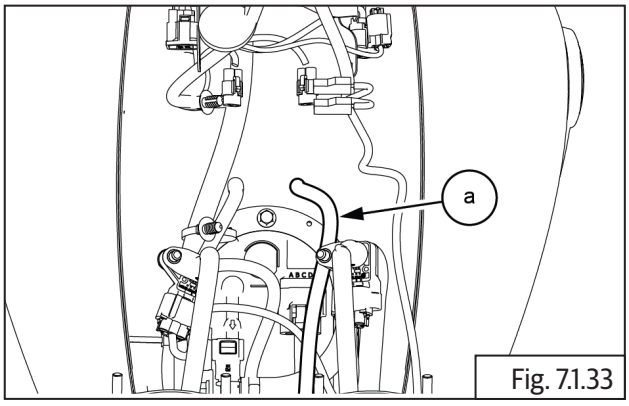

Fig. 7.1.33

7.1.17. EVAP Connections to Fuel Tank

- Connect EVAP connection hose **(a)** to fuel tank .

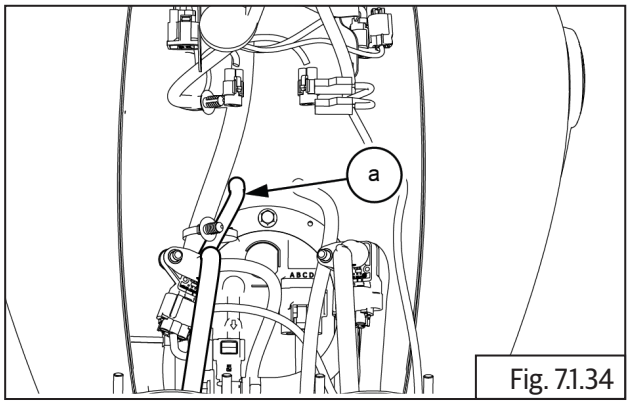

Fig. 7.1.34

7.1.18. Fuel Hose (Fuel Pump to Injector)

- Connect fuel hose **(a)** into quick fix connector **(b)** and ensure lock button is locked with a click sound.

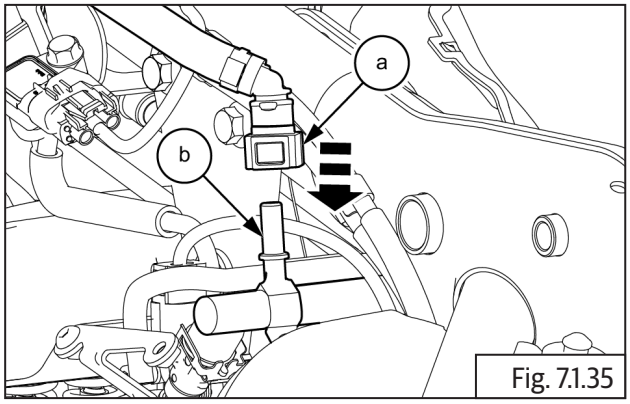

Fig. 7.1.35

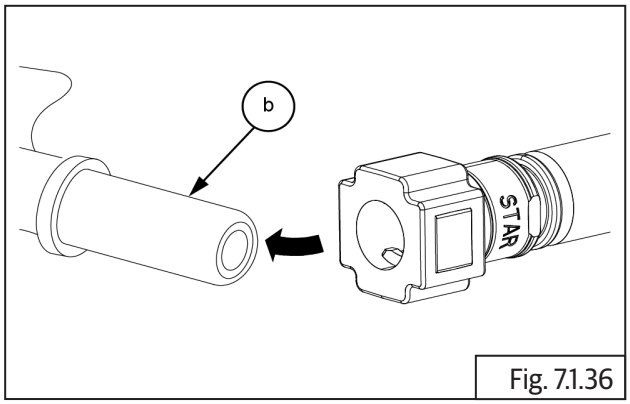

Fig. 7.1.36

7.1.19. Fuel Pump Connector

- Connect fuel pump connector **(a)** into fuel pump **(b)**.

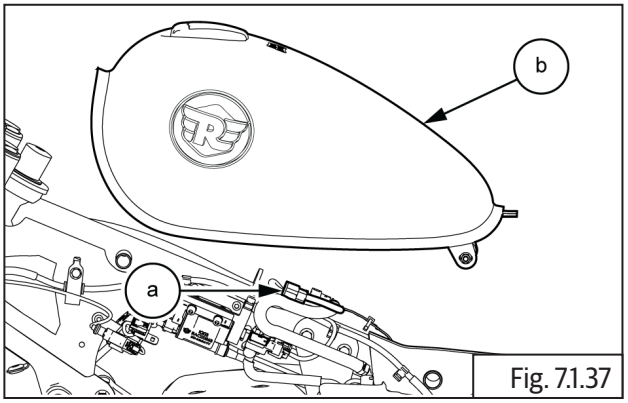

Fig. 7.1.37

- Gently lower the fuel tank into frame.
- Locate and tighten 1 No. Hex head bolts **(M6) (a)** on rear end of fuel tank.

NOTE
• *Head of bolt must be on RHS frame. Nut must be on LHS frame*

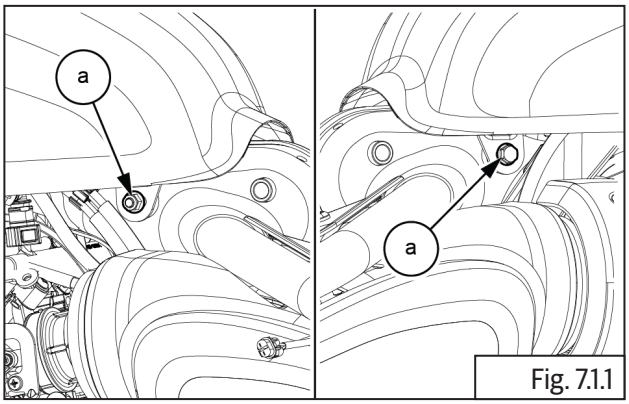

Fig. 7.1.1

	10 mm Socket with Ratchet
Torque	13 N-m / 1.3 kgf-m

- Locate the LH and RH cover **(b)** into throttle body.
- Locate and tighten 6 Nos. allen head screws **(a)** on LH and RH throttle body.

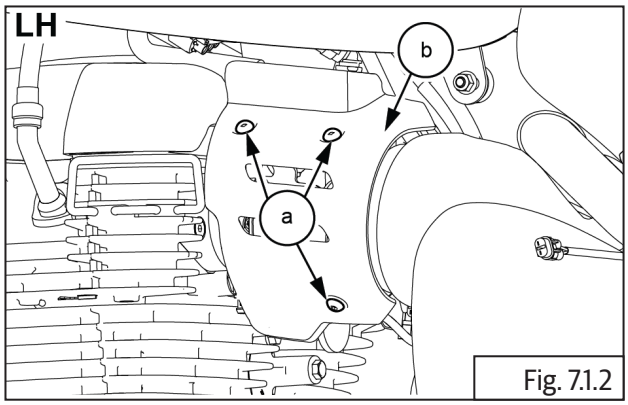

Fig. 7.1.2

	4 mm Allen Socket with Ratchet
Torque	7 N-m / 0.7 kgf-m

7.1.20. Fuel Tank Cap

- Locate the fuel tank cap **(a)**

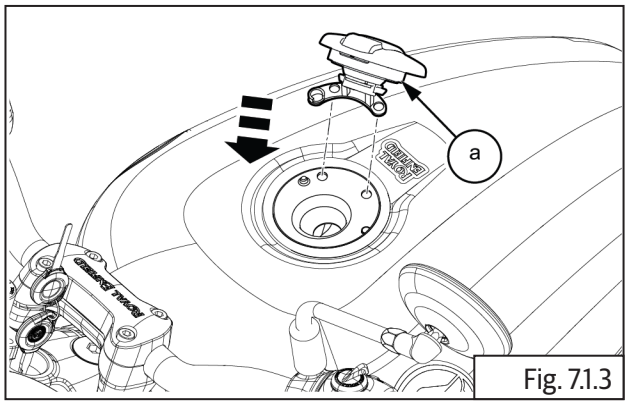

Fig. 7.1.3

- Locate and tighten 2 Nos. allen head screws **(M5) (a)** on fuel tank cap.

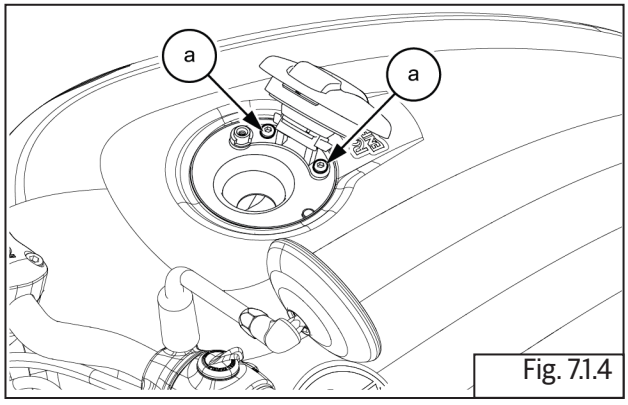

Fig. 7.1.4

	4 mm Allen socket with Ratchet
Torque	5 N-m / 0.5 kgf-m

- Press cap to lock with key in position.
- Remove key from cap and close flap **(a)**.

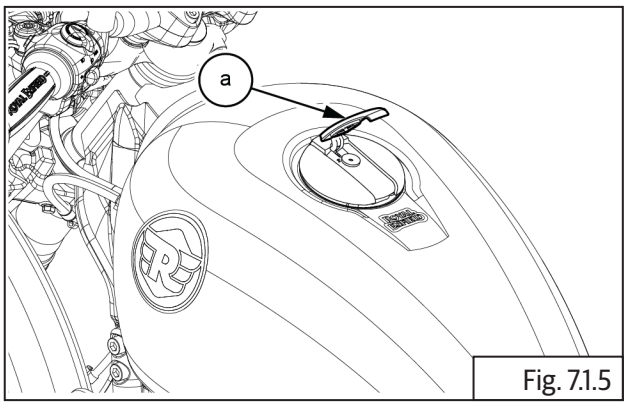

Fig. 7.1.5

NOTE
• *Switch ON and OFF the ignition twice and visually check for any fuel leakage or wet on the tank and components, If anything found, inspect and rectify the issue.*

- Install rider seat.
- Install Pillion seat.

EVAPORATIVE (EVAP) EMISSION CONTROL SYSTEM

CONTENTS PAGE

8. Evaporative (EVAP) Emission Control System 527

General Description 527

8.1. Evaporative (EVAP) Emission Control System 528

Dismantling 528

8.1.1. Charcoal Canister 528

8.1.2. EVAP Purge Valve 530

8.1.3. Hoses 531

Inspection 532

8.1.4. Charcoal Canister 532

8.1.5. Purge Valve 532

8.1.6. Hoses 532

8.1.7. Hose Connectors 532

8.1.8. EVAP System Leak Test Procedure 533

Assembly 533

8.1.9. EVAP Hose Routing Procedure 533

8.1.10. Hoses 535

8.1.11. EVAP Purge Valve 535

8.1.12. Charcoal Canister 536

8. Evaporative (EVAP) Emission Control System

General Description

Royal Enfield twin cylinder motorcycles are equipped with Evaporative (EVAP) Emission Control System.

Whenever the motorcycle is parked after a ride or in hot summer, in high day time temperatures, fuel vapors with hydrocarbons tend to escape into the atmosphere through the vent hole of the fuel tank cap.

The evaporative emission control system traps these fuel vapors and purges it into a charcoal canister. When the engine is running, the vapors from the charcoal canister is routed through a purge valve into the combustion chamber. These vapors are also monitored by the engine management system (EMS) so as to ensure the exhaust emissions are within the specifications.

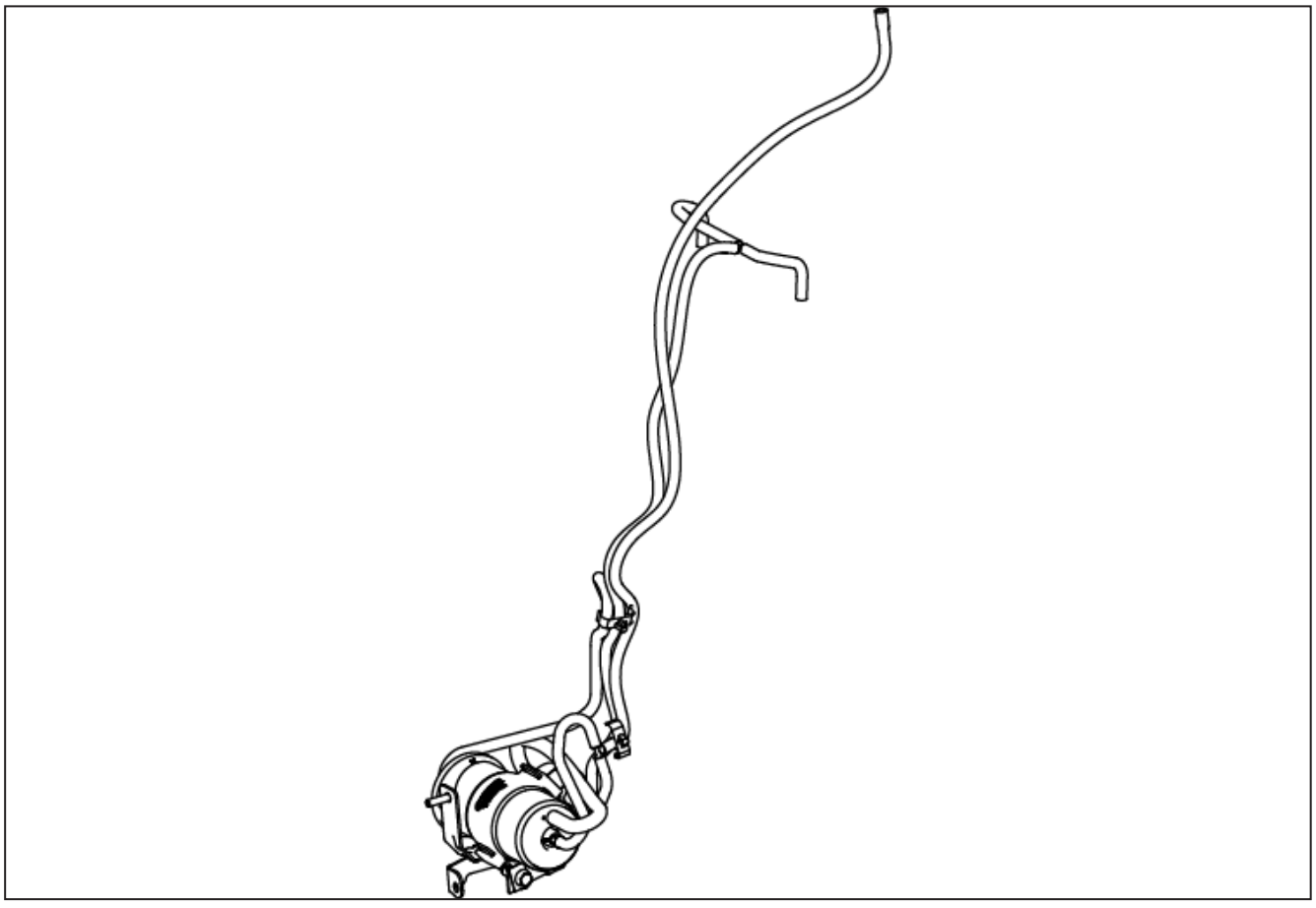

⚠ WARNING

Before dismantling any part of the EVAP system, ensure the engine and exhaust systems are at ambient temperature. Evaporative fuel vapors are highly inflammable and explosive, which can result in serious injury and or fatal accidents.

⚠ WARNING

DO NOT damage or puncture any part of the EVAP system like canister, purge valve etc. DO NOT blow high compressed air into the canister or purge valve as it can result in an explosion.

⚠ CAUTION

Ensure the motorcycle is upright on a firm and flat surface.

- Ensure ignition key and engine stop switch are in OFF position.
- Disconnect battery negative (-) terminal.
- Before removing any part of the EVAP system, open fuel tank cap to release the pressure inside.
- Remove the Throttle Body Cover.
- Remove the RH Infill Panel.
- Remove the LH Infill Panel.
- Remove the Pillion Seat.
- Remove the Battery from Frame.

8.1. Evaporative (EVAP) Emission Control System

Dismantling

8.1.1. Charcoal Canister

- The charcoal canister **(a)** is located underneath the frame and above center stand mounting location.

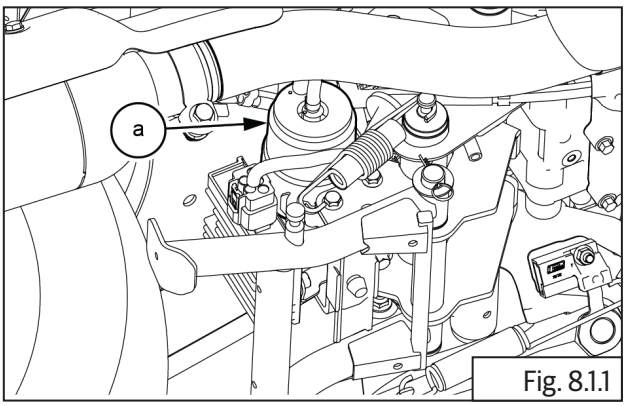

Fig. 8.1.1

- Disconnect electrical connector **(a)** from RR unit .

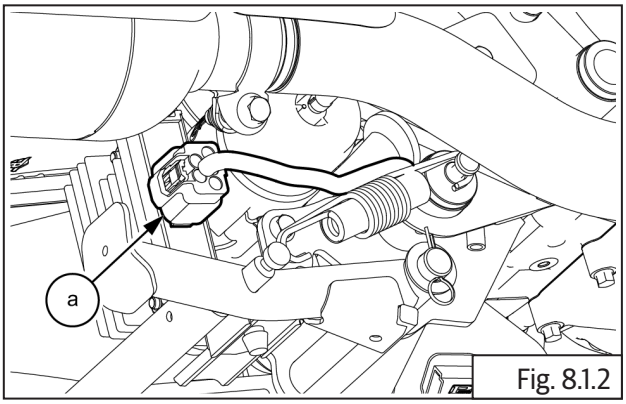

Fig. 8.1.2

- Loosen and remove Hex head flange bolts 3 Nos **(M6) (a)** from EVAP canister bracket.

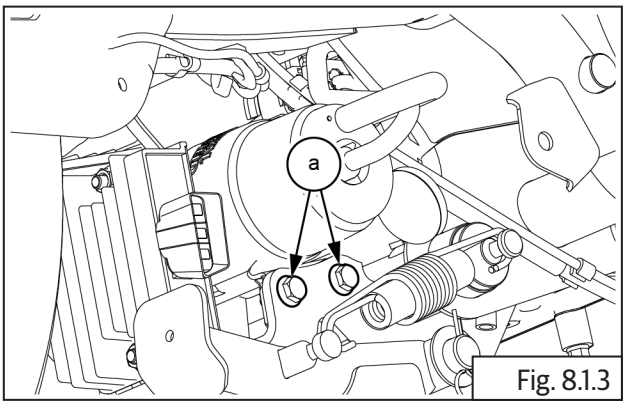

Fig. 8.1.3

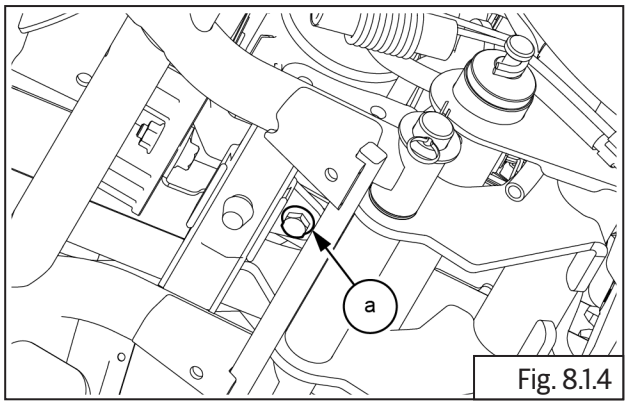

Fig. 8.1.4

	10 mm Socket with Ratchet

- Disconnect electrical connector **(a)** from purge valve .

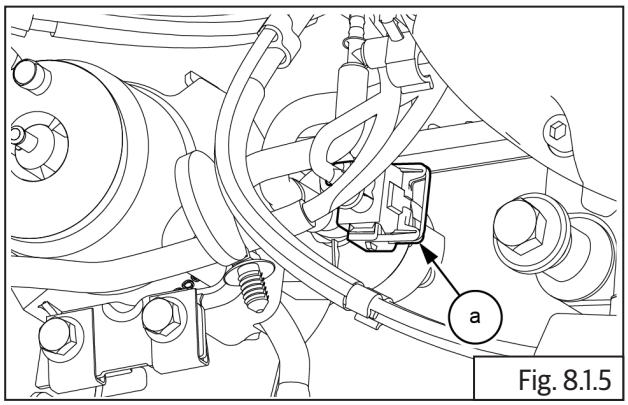

Fig. 8.1.5

CAUTION

Do not apply excessive force to pull out canister with hoses as it will damage the canister and the hose pipes.

- Disconnect EVAP connection hose **(a)** from bottom of fuel tank.

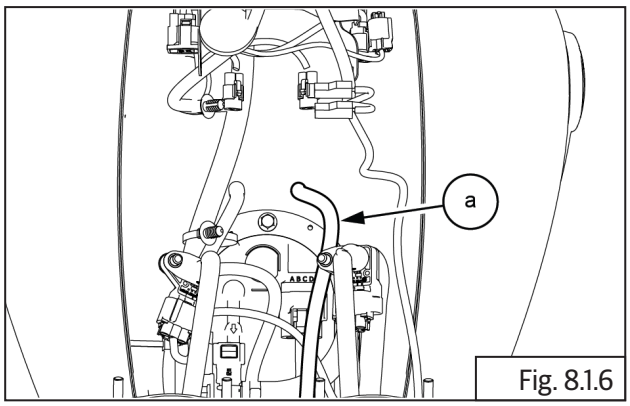

Fig. 8.1.6

- Disconnect inlet hose **(a)** a from canister.

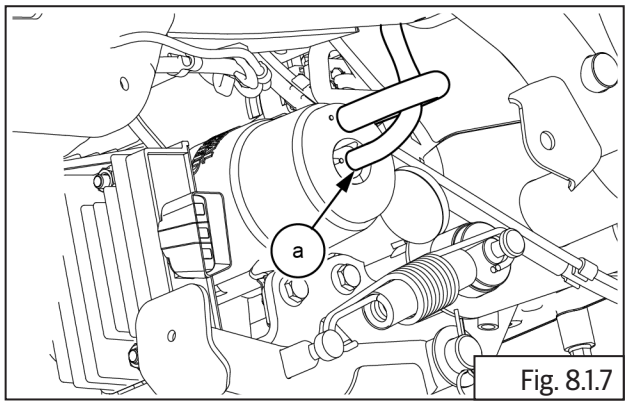

Fig. 8.1.7

- Disconnect drain hose **(a)** from canister.

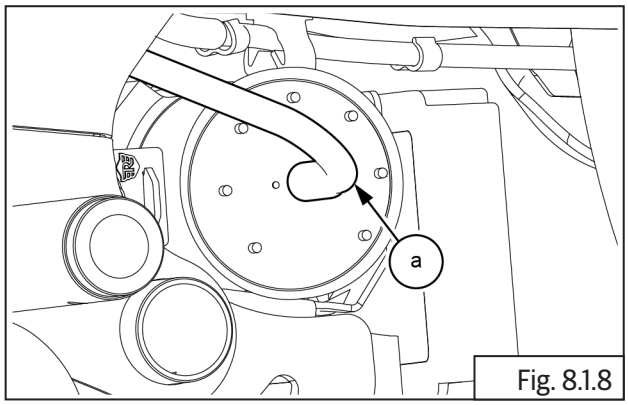

Fig. 8.1.8

- Loosen and remove Hex flange head nuts 2 Nos **(M6) (a)** from RR unit.
- Remove RR unit from canister bracket.

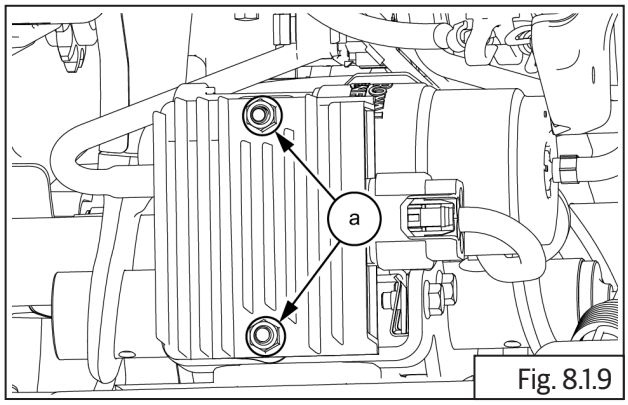

Fig. 8.1.9

	10 mm Socket with Ratchet

- Slide and remove the canister with rubber boot **(a)** from bracket.

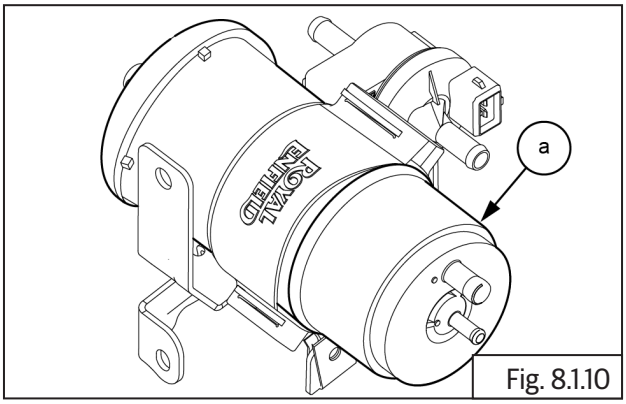

Fig. 8.1.10

8.1.2. EVAP Purge Valve

- Remove the Throttle Body Cover.
- Remove the RH Infill Panel.
- Remove the LH Infill Panel.
- Remove the Pillion Seat.
- Remove the Battery from Frame.
- Remove the Charcoal Canister.
- Disconnect electrical connector **(a)** from purge valve.

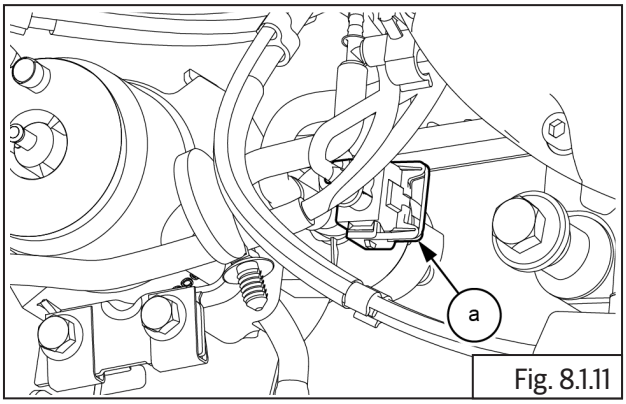

Fig. 8.1.11

- Disconnect out put hose **(a)** from purge valve.

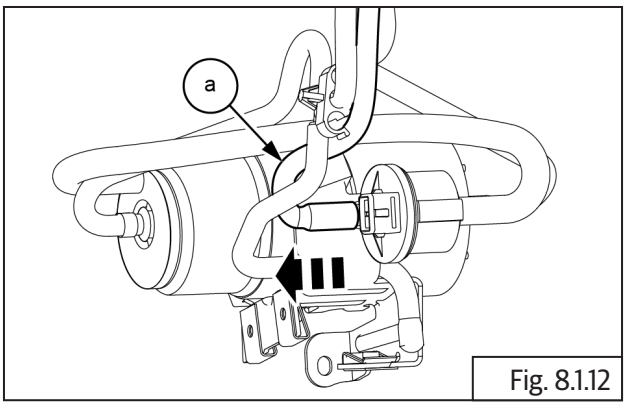

Fig. 8.1.12

- Disconnect input hose **(a)** from purge valve .

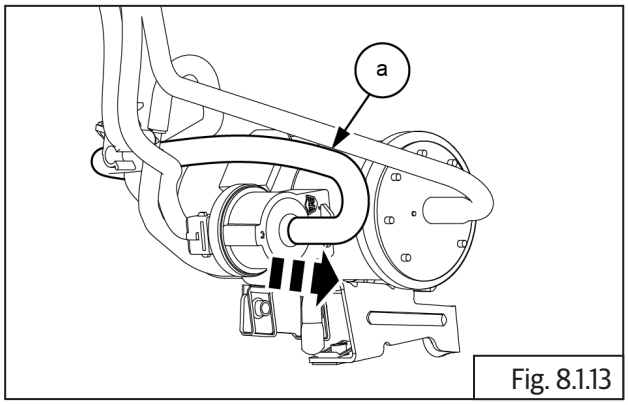

Fig. 8.1.13

- Slide and remove the purge valve with rubber boot **(a)** from bracket.

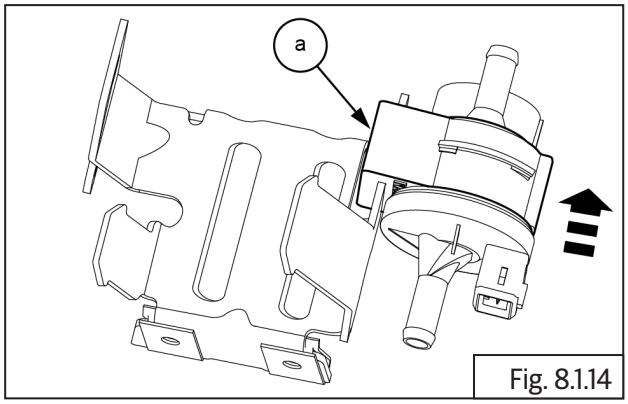

Fig. 8.1.14

- Remove the purge valve **(a)** from rubber boot.

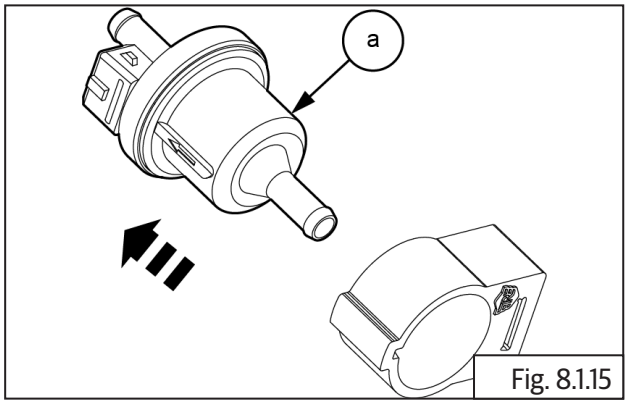

Fig. 8.1.15

8.1.3. Hoses

- Remove fuel tank and disconnect hoses.
- Remove the hoses from root clips **(a).**

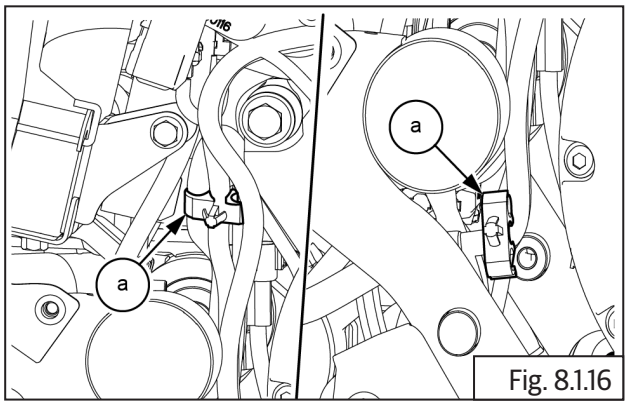

Fig. 8.1.16

- Disconnect hose from purge valve **(a)** to connector **(b)**.
- Disconnect hose **(c)** from connector to T-joint **(d)** near throttle body.

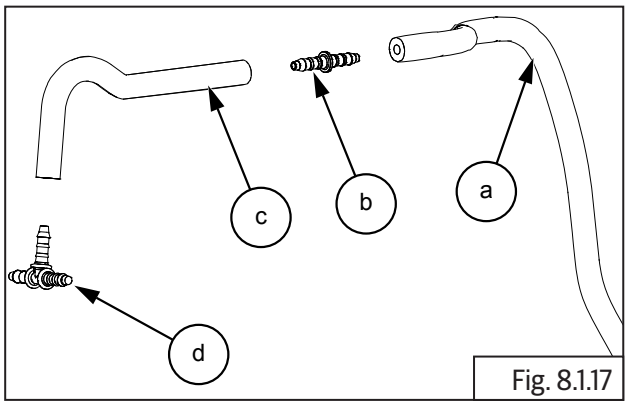

Fig. 8.1.17

- Disconnect 2 Nos. hoses **(a)** from throttle body connecting to T-joint.

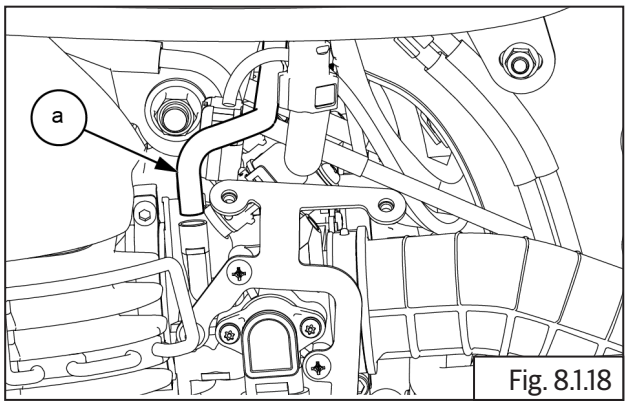

Fig. 8.1.18

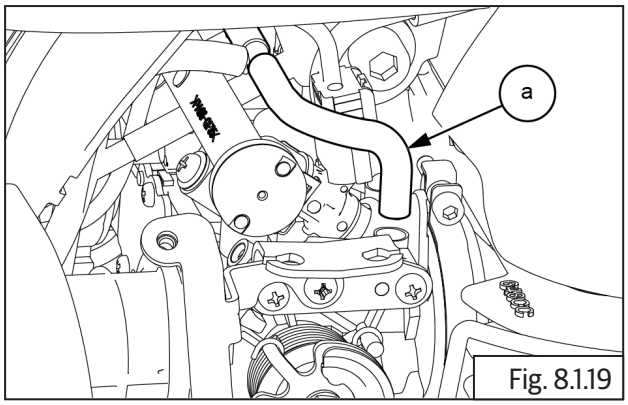

Fig. 8.1.19

NOTE
• *Separate the connector and T-joint from the hoses and store carefully.*

Inspection

8.1.4. Charcoal Canister

- Clean and inspect for any damage or crack on canister. Replace if necessary.
- Gently shake canister to feel if there is wet fuel inside. If suspected replace canister.
- Blow very low pressure air (20 kPa) through the inlet port and check for the free flow of outlet side. If restricted or no air, replace the canister.

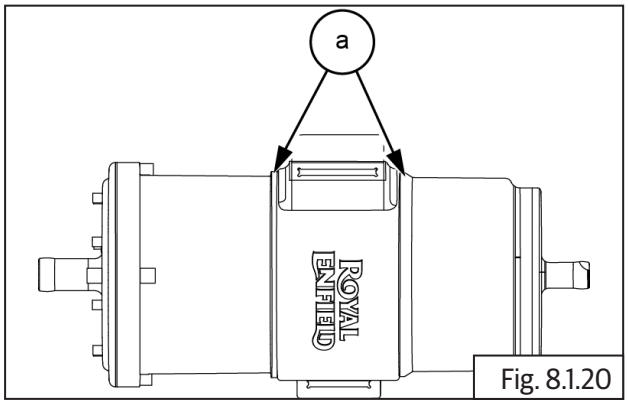

Fig. 8.1.20

8.1.5. Purge Valve

- Clean and visually inspect the EVAP purge valve for any damage or crack.
- Check purge valve in EMS section, replace if found defective.
- Blow low pressure air (20 kPa) through hose connecting to throttle body and check for pressure release through hose connecting to canister. If air releases, purge valve is defective and replace.

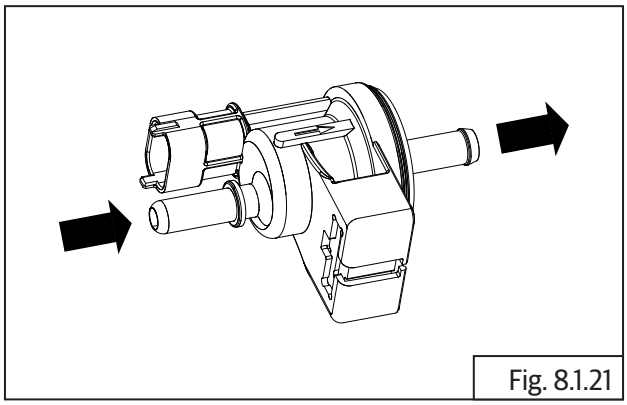

Fig. 8.1.21

8.1.6. Hoses

- Check hose for any crack, pinch, wear out or hardening. Replace if defective.
- Replace hoses as mentioned in periodic maintenance schedule.

8.1.7. Hose Connectors

- Check for any damages or cracks and replace if defective.

Do's & Don'ts

- Do not fill fuel tank above anti-splash plate inside fuel tank as it will cause fuel to get into EVAP system.

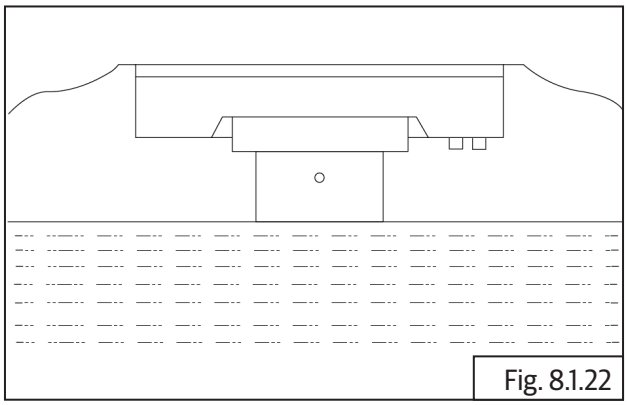

Fig. 8.1.22

- Do not use motorcycle if any part of EVAP system is damaged.
- Do check the EVAP system periodically for damages and leakages.

8.1.8. EVAP System Leak Test Procedure

- Ensure the systems hoses are connected correctly.
- Block the EVAP atmosphere breather.
- Block the LH side throttle body Hose, Purge.
- Connect a hose to the fuel tank to EVAP hose to allow a pressure to be applied.
- Connect another hose to the RH side throttle body Hose, Purge.
- Pressurize the system through both the Evap Canister atmosphere breather and the RH side throttle body Hose, Purge at the same time as below:
  1. Fill at 20kPa for 20 Seconds.
  2. Stabilize, 50 Seconds.
  3. Drop less than 300 Pa over 5 minutes.

Assembly

8.1.9. EVAP Hose Routing Procedure

- Canister outlet hose **(a)** and main inlet hose **(b)** pass through omega clip,which inserts into frame.

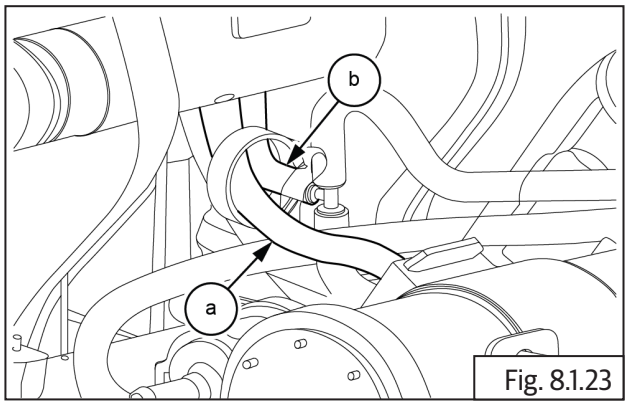

Fig. 8.1.23

- Canister outlet hose **(a)** and main inlet hose **(b)** pass under and in front of swing arm tube in frame, between frame and crankcase.
- Canister outlet hose (a) and main inlet hose (b) fix on three way clip.

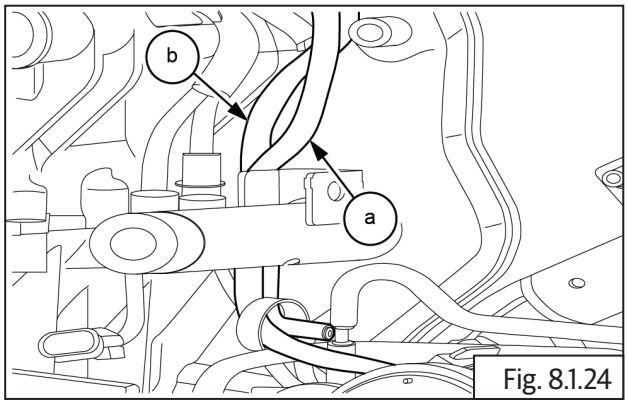

Fig. 8.1.24

- From three way clip Canister outlet hose **(a)** and main inlet hose **(b)** bend forward, passing over upper rear crankcase mount and under frame cross tube.

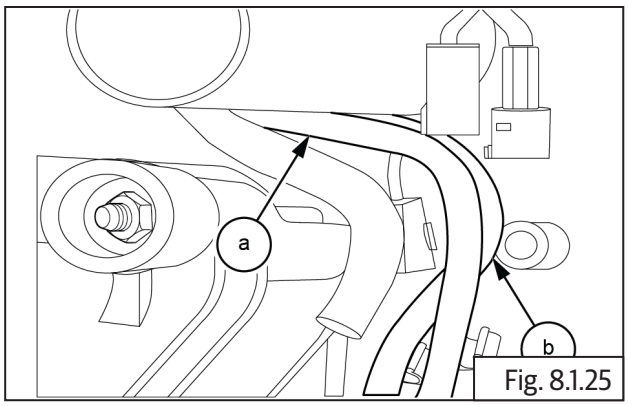

Fig. 8.1.25

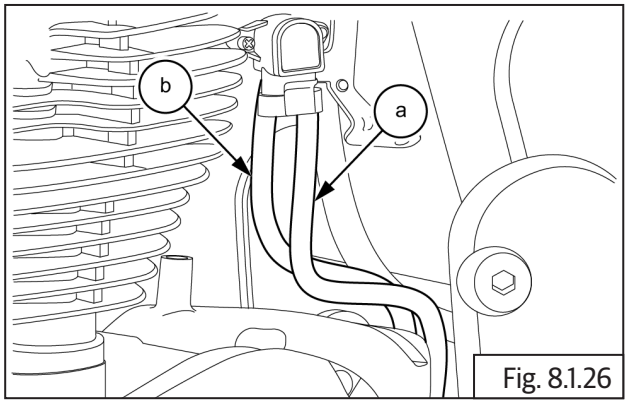

Fig. 8.1.26

- Canister outlet hose **(a)** routed over the top of the fuel rail.

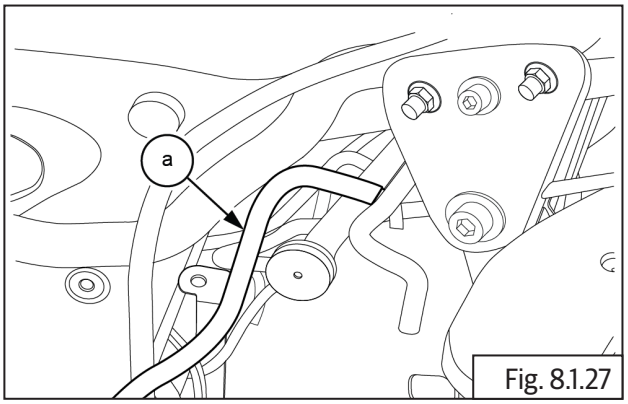

Fig. 8.1.27

- Tank hose **(a)** routed up alongside the frame on RHS.

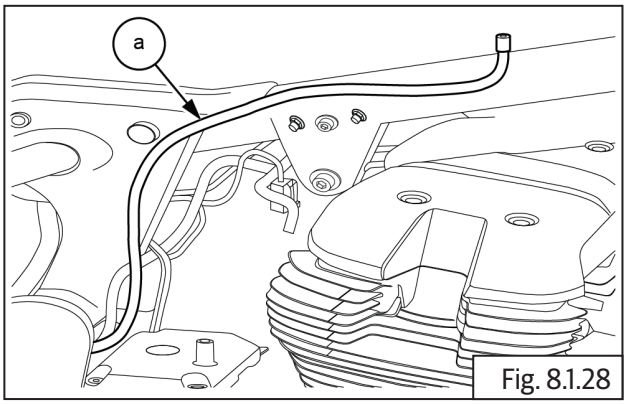

Fig. 8.1.28

NOTE
• Tank hose sits over the top of the harness conduit and harness and will be connected to the underside of the fuel tank, so must sit on top of the frame spine.

- Breather hose **(a)** is routed forward from the canister, over the top of the purge hose **(b)** and underneath frame swing arm tube.

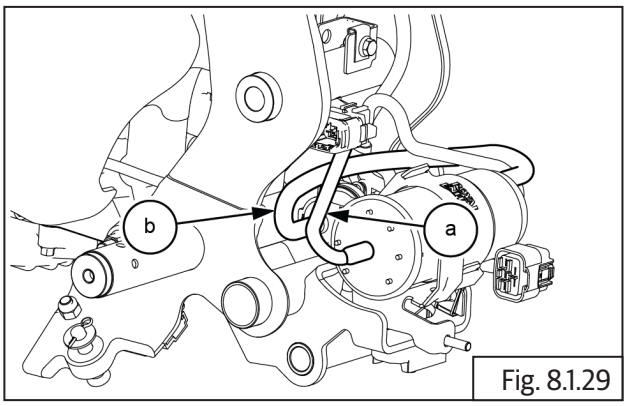

Fig. 8.1.29

- Route drain hose **(a)** underneath swing arm cross tube and up toward three way clip.

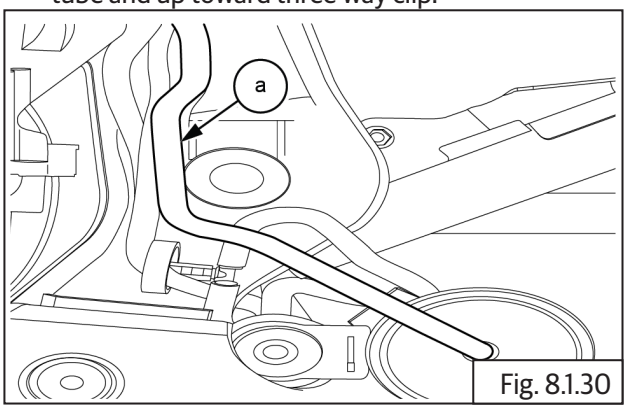

Fig. 8.1.30

- Hose turns back on itself behind crankcase.

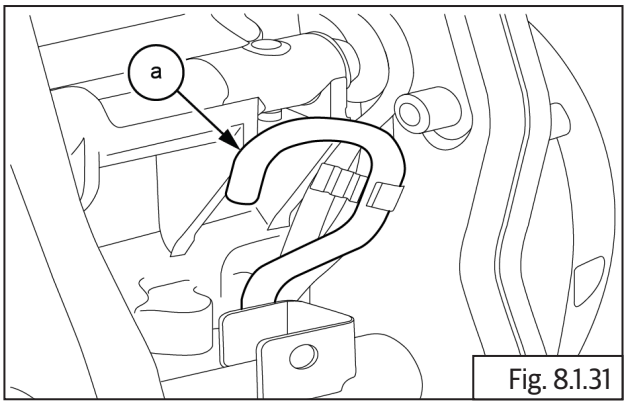

Fig. 8.1.31

8.1.10. Hoses

- Position the hoses on the root clips **(a).**

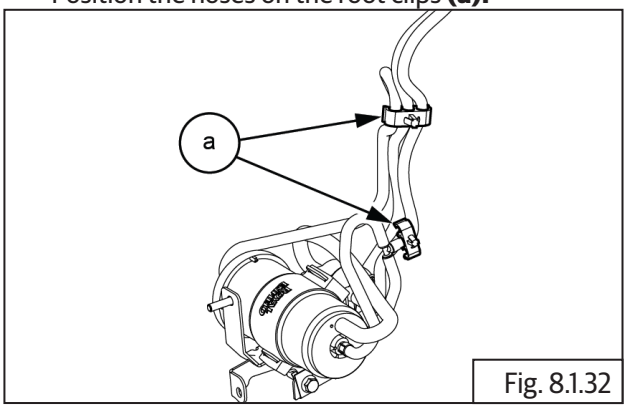

Fig. 8.1.32

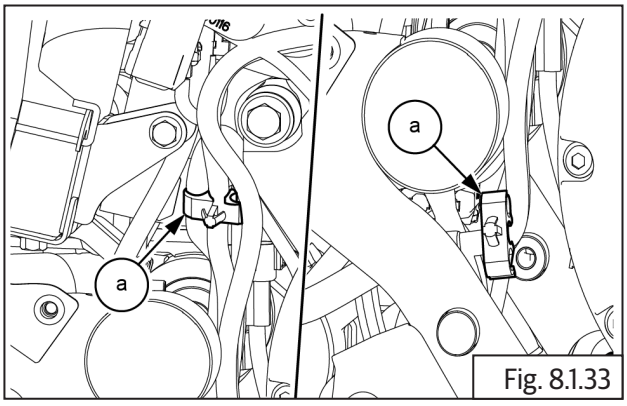

Fig. 8.1.33

NOTE
• *Please ensure the EVAP hoses are routed properly and ensure they DO NOT get pinched or damaged.*

- Locate connector **(b)** on the hose **(a)** going to purge valve.
- Connect small hose **(c)** to connector **(b)**.
- Connect T-joint **(d)** to small hose **(c)**.

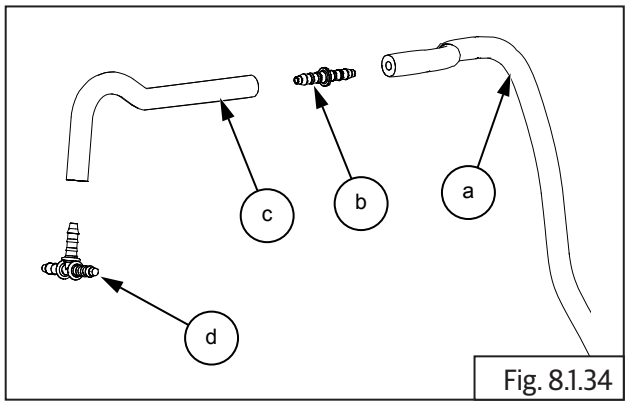

Fig. 8.1.34

- Connect 2 Nos. hoses on either end of T-joint to throttle body and connect the other end of the hoses to the throttle body LH and RH **(a)**.

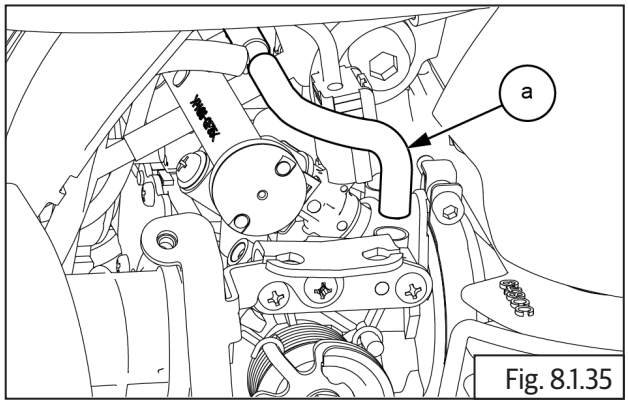

Fig. 8.1.35

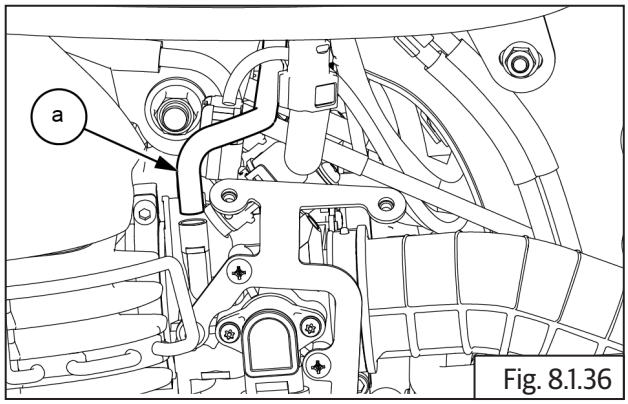

Fig. 8.1.36

8.1.11. EVAP Purge Valve

- Fix purge valve **(a)** into the rubber boot.

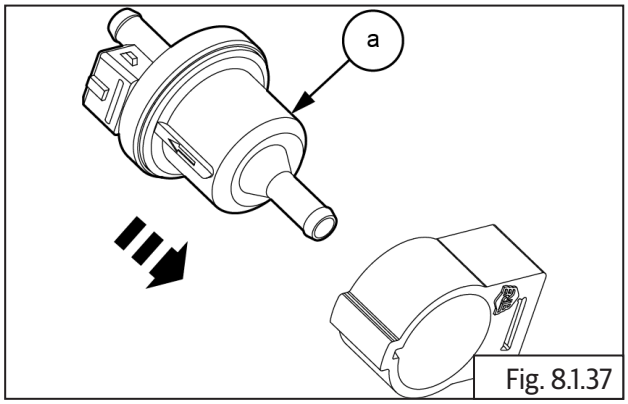

Fig. 8.1.37

- Slide and fix the purge valve with rubber boot **(a)** into the bracket.

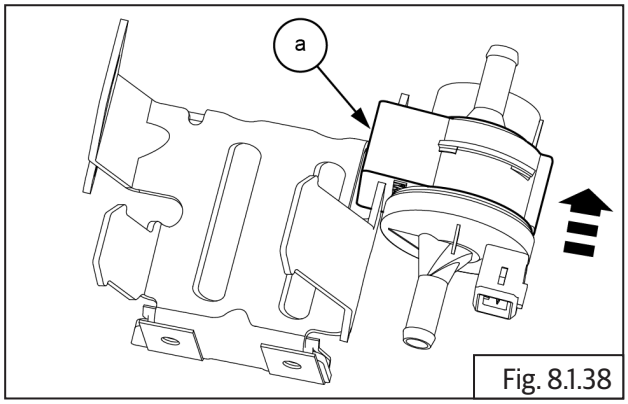

Fig. 8.1.38

- Connect input hose **(a)** to purge valve .

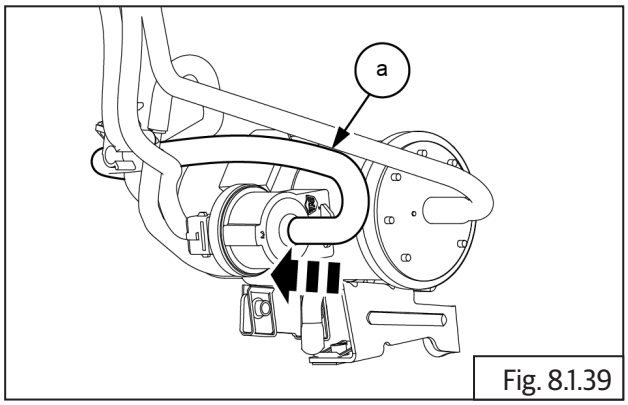

Fig. 8.1.39

- Connect out put hose **(a)** to purge valve .

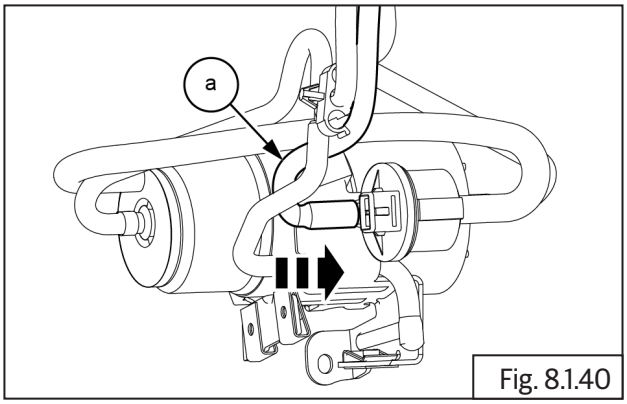

Fig. 8.1.40

- Connect electrical connector **(a)** to purge valve .

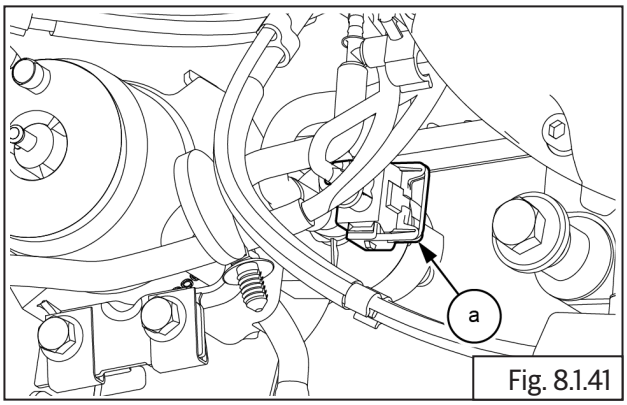

Fig. 8.1.41

- Assemble the Pillion Seat.
- Assemble the RH Infill Panel.
- Assemble the LH Infill Panel.
- Assemble the Charcoal Canister.
- Assemble the Throttle Body Cover.
- Assemble the Battery from Frame.

8.1.12. Charcoal Canister

- Boot to seat between ribs on canister **(a).**

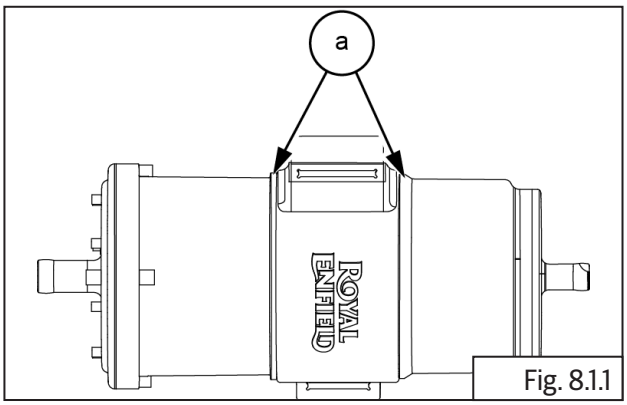

Fig. 8.1.1

- Boot large slot should be 50 deg angle of canister **(a)** center.

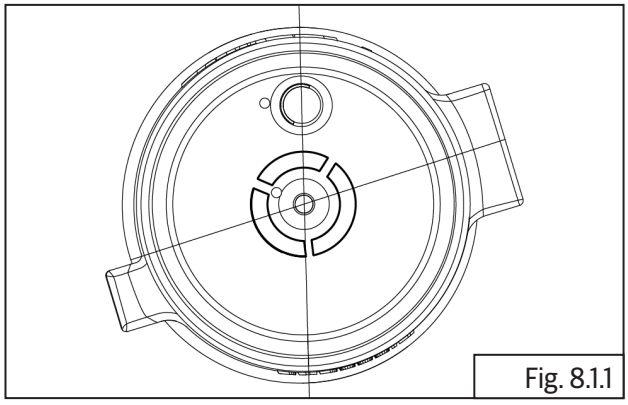

Fig. 8.1.1

- The charcoal canister **(a)** is located underneath the frame / above center stand mounting location.

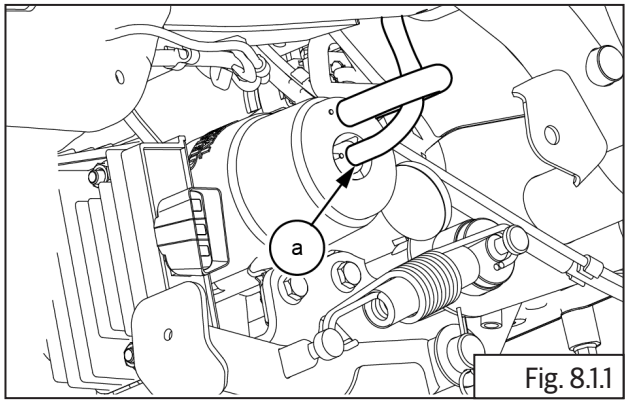

Fig. 8.1.1

- Slide and fix the canister with rubber boot **(a)** to bracket.

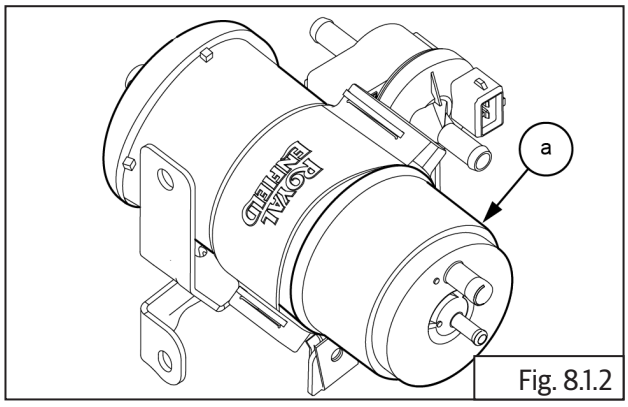

Fig. 8.1.2

- Locate the RR unit on canister bracket.
- Locate and tighten Hex head flange nuts 2 Nos **(M6) (a)** on RR unit.

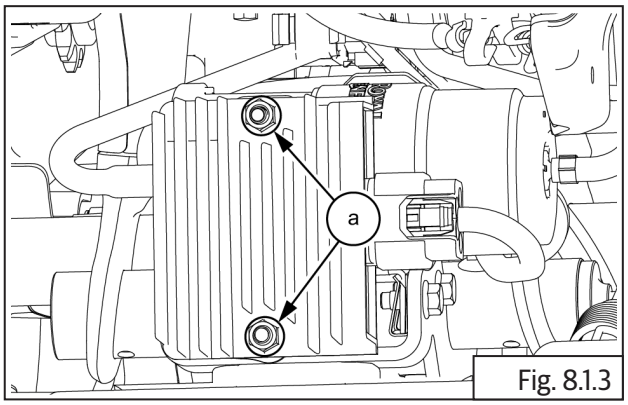

Fig. 8.1.3

	10 mm Socket with Ratchet
Torque	10 N·m / 1.0 kgf m

- Connect drain hose **(a)** to canister.

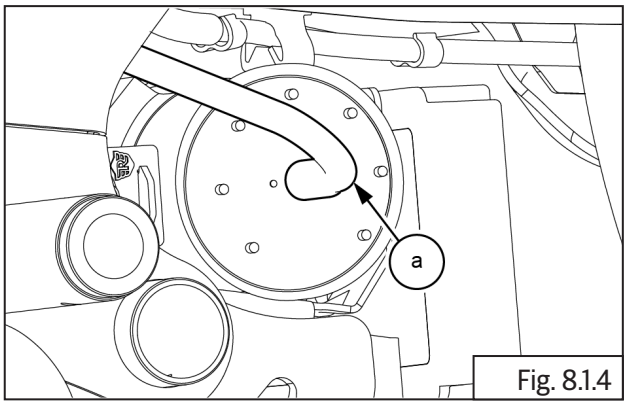

Fig. 8.1.4

- Connect inlet **(a)** and outlet **(b)** hoses to canister .

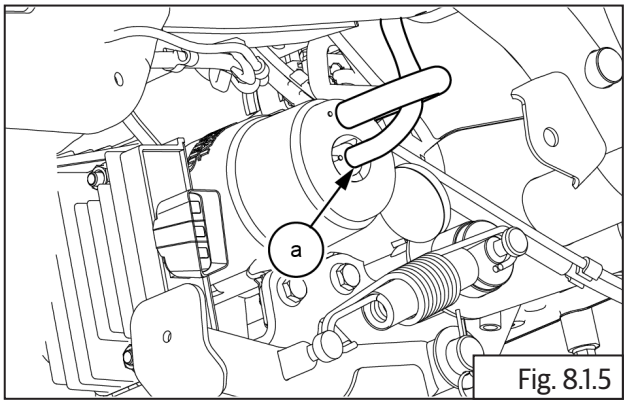

Fig. 8.1.5

- Connect EVAP connection hose **(a)** to bottom of fuel tank.

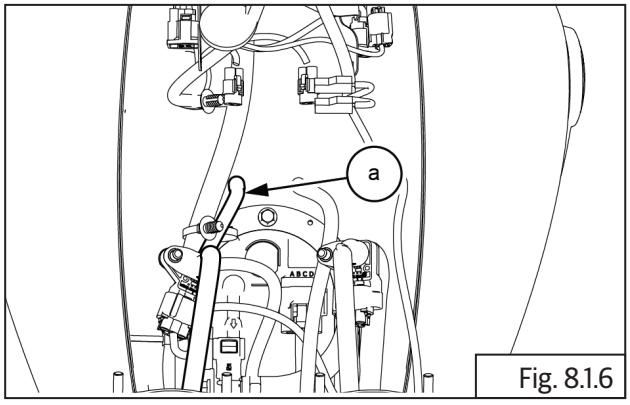

Fig. 8.1.6

- Connect electrical connector **(a)** to purge valve .

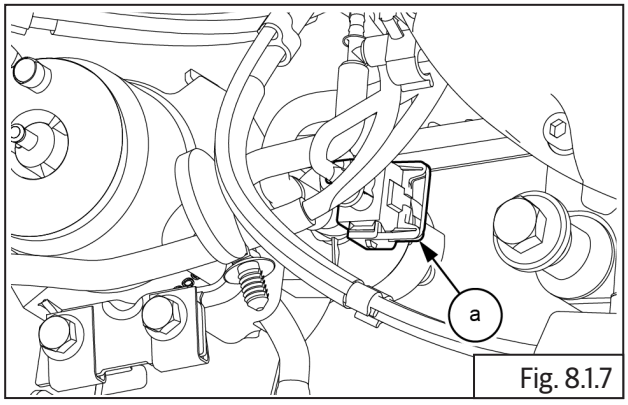

Fig. 8.1.7

NOTE
• *Do not connect anything to the third pipe in the canister. It is a dummy pipe.*

- Locate and tighten Hex head flange bolts 3 Nos **(M6) (a)** on EVAP canister bracket. EVAP canister bracket is located on RH side of motorcycle.

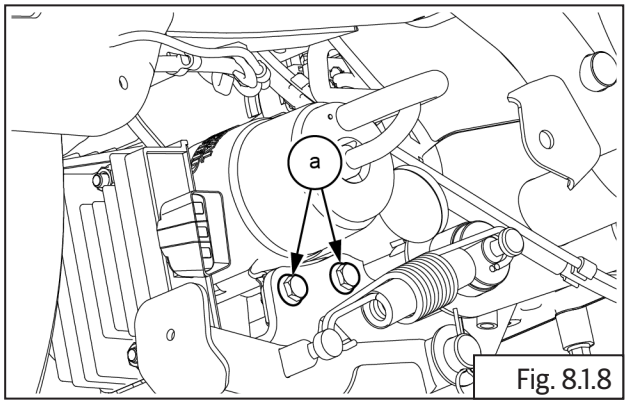

Fig. 8.1.8

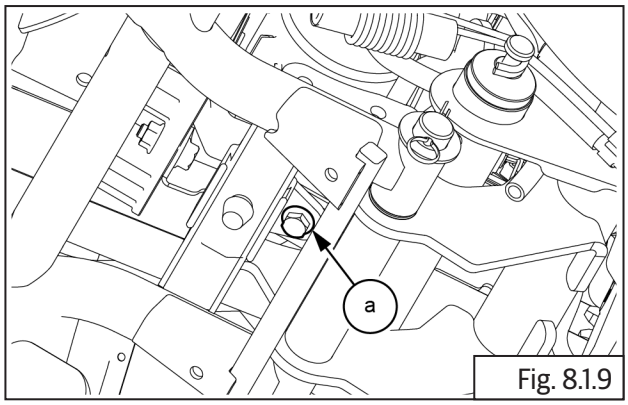

Fig. 8.1.9

	10 mm Socket with Ratchet
Torque	10 N·m / 1.0 kgf m

- Connect electrical connector **(a)** to RR unit .

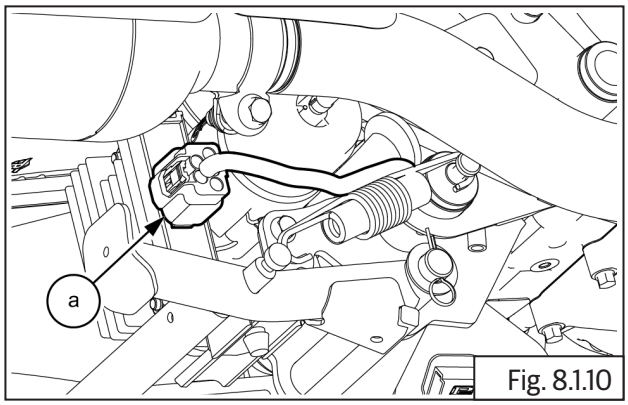

Fig. 8.1.10

- Reassemble the Throttle Body Cover.
- Reassemble the RH Infill Panel.
- Reassemble the LH Infill Panel.
- Reassemble the Pillion Seat.
- Reassemble the Battery from Frame.

BRAKES AND ABS

CONTENTS PAGE

9. Brakes and ABS 543

Dismantling 543

9.1. Brake - Front 543

9.1.1. Master Cylinder Assembly - Front 544

9.1.2. Brake Caliper - Front 545

9.1.3. Brake Disc - Front 546

9.2. Brake - Rear 547

9.2.1. Master Cylinder Assembly - Rear 548

9.2.2. Brake Caliper Assembly - Rear 550

9.2.3. Brake Disc - Rear 552

Inspection 552

Assembly 555

Brake - Rear 555

9.2.4. Brake Disc - Rear 555

9.2.5. Brake Caliper Assembly - Rear 555

9.2.6. Master Cylinder Assembly - Rear 558

Brake - Front 561

9.2.7. Brake Disc - Front 561

9.2.8. Brake Caliper - Front 562

9.2.9. Master cylinder - Front 564

9.3 Anti-lock Braking System (ABS) 566

Working Principle 566

Typical Motorcycle Braking Distance 566

Functions and Specifications of the ABS Aggregates 567

Dismantling 577

9.3.1. Modulator 572

9.3.2. Wheel Speed Sensor - Front 576

CONTENTS PAGE

9.3.3. Wheel Speed Sensor - Rear 577
9.3.4. Toner Ring – Front 578
9.3.5. Toner Ring –Rear 578
Assembly 578
9.3.6. Toner Ring – Front 578
9.3.7. Toner Ring –Rear 578
9.3.8. Wheel Speed Sensor - Rear 578
9.3.9. Wheel Speed Sensor - Front 579
9.3.10. Modulator 580
9.3.11 ABS DTC Codes 584
9.4. Preparation (Front Disc Brake) 587
9.5. Reassembly 589
9.6. Preparation (Rear Disc Brake) 590
9.7. Reassembly 591
9.8. Brake Bleeding 592
9.8.1. Front Brake Bleeding 593
9.8.2. Front Brake Fluid Leakage 596
9.8.3. Front Brake Fluid Top up 597
9.8.4. Rear Brake Bleeding.... 598
9.8.5. Rear Brake Fluid Leakage....600
9.8.6. Rear Brake Fluid Top Up.... 601

9. Brakes and ABS

Dismantling

9.1. Brake - Front

⚠ CAUTION

Ensure the motorcycle is upright on a firm and flat surface.

Support motorcycle with suitable equipment below swing arm frame.

- Position the screw jack directly under the boss of the crank case.
- Carefully use the screw jack to lift the motorcycle until the front wheel is off the ground.
- Make sure the motorcycle is stable and secure before performing any maintenance or repairs.

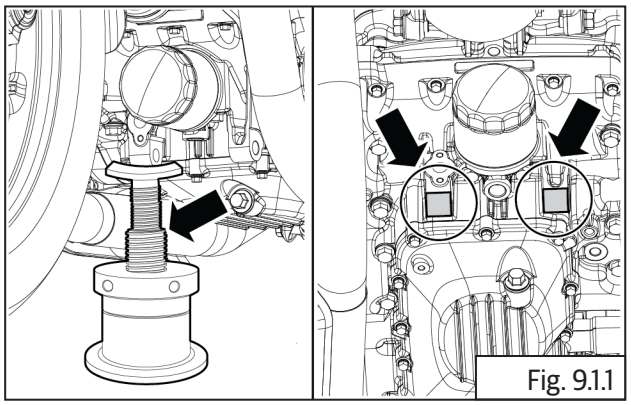

Fig. 9.1.1

- Before dismantling brake assembly, bleed out brake fluid.

NOTE

- *If brake pads are being replaced, then it is not necessary to perform system bleeding.*
- *Wheel should be dismantled only for brake disc plate removal.*

⚠ CAUTION

Whenever front brake caliper assembly is dismantled from front wheel, DO NOT depress brake lever as the piston in the caliper will move out/get misaligned.

DO NOT remove or disturb the wheel speed sensor on fork end LH.

9.1.1. Master Cylinder Assembly - Front

- Rear view mirror from handlebar RH.

⚠ CAUTION

Ensure master cylinder assembly is supported carefully while disconnecting.

- Disconnect brake lamp switch connectors **(a)** from brake lamp switch.

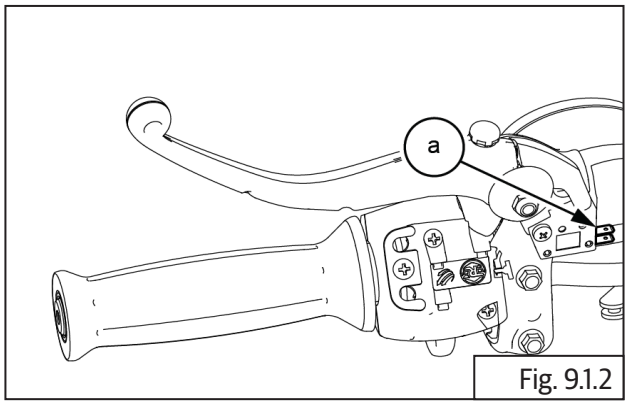

Fig. 9.1.2

- Loosen and remove 2 Nos. Hex bolts **(M5) (a)** along with washers from clamp and remove master cylinder assembly from handlebar RH.

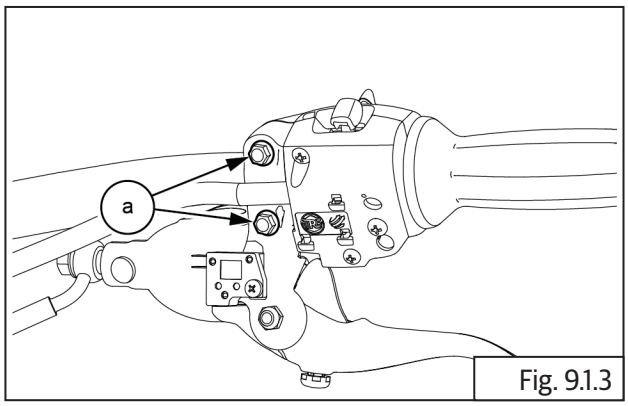

Fig. 9.1.3

	8 mm Socket with Ratchet

- Hold screw **(a)** at the top of brake lever, loosen and remove hex nut **(M6) (b)** at the bottom.
- Unscrew and remove top screw holding brake lever to master cylinder and remove brake lever.

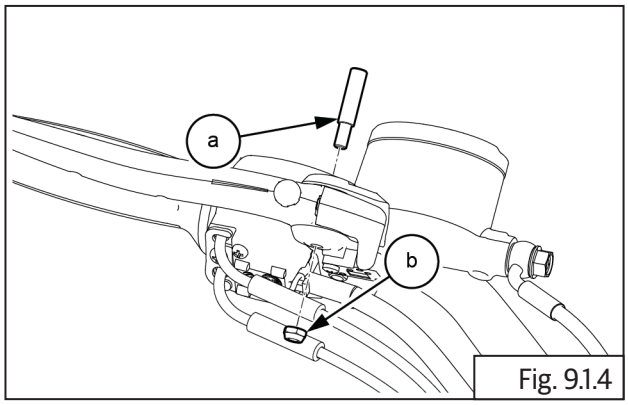

Fig. 9.1.4

	Screw driver and 10 mm Double end spanner

Dismantling Master Cylinder Front

- Remove boot **(a)** from the master cylinder assembly **(b)**.

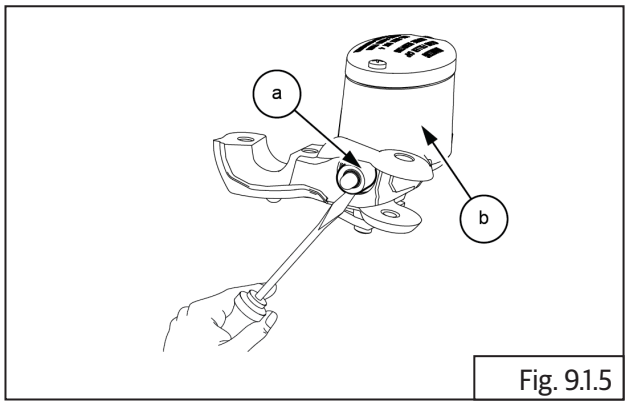

Fig. 9.1.5

	Screw driver

- Remove circlip **(a)** from the master cylinder assembly **(b)**.

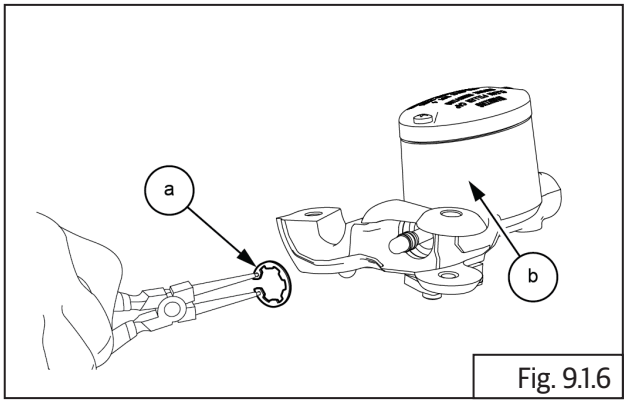

Fig. 9.1.6

	Circlip plier

- Remove the conical spring (piston compression spring) **(a)** from piston **(b)** .

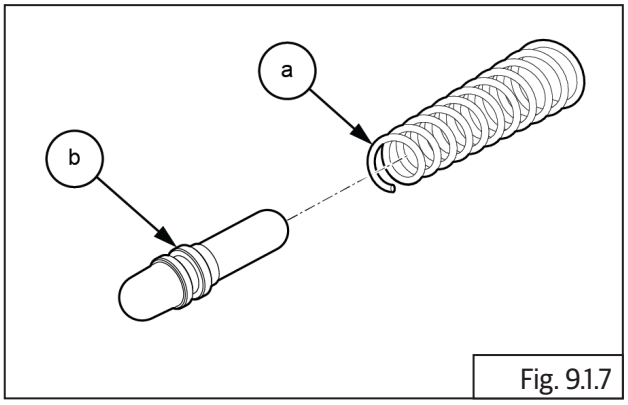

Fig. 9.1.7

9.1.2. Brake Caliper - Front

- Loosen and remove upper and lower Hex flange head bolts **(M10) (a)** to remove front brake caliper assembly **(b)** from LH fork.

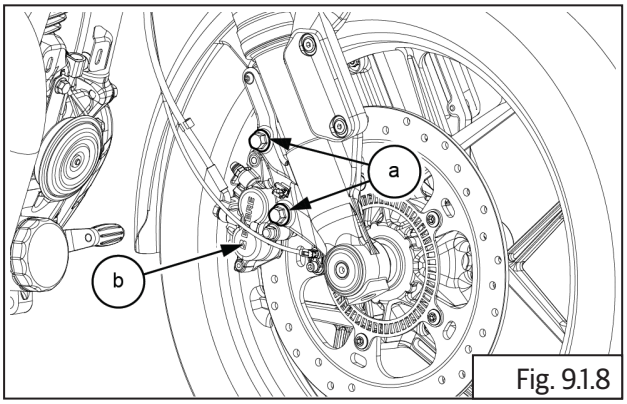

Fig. 9.1.8

	14 mm Socket with Ratchet

- Gently slide out front brake caliper assembly from front LH fork.
- Remove brake pad lock clip **(a)** from brake caliper assembly.

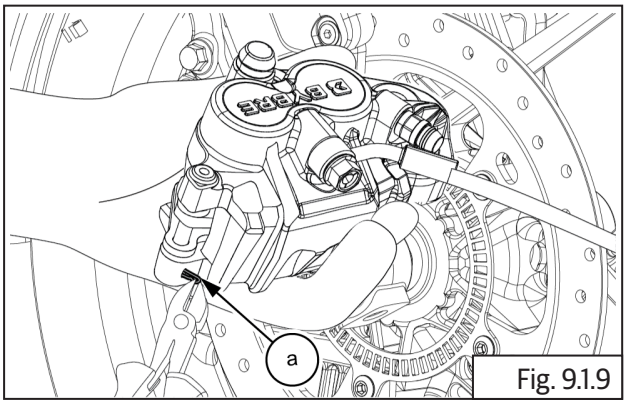

Fig. 9.1.9

	Nose plier

- Suitably support caliper and correctly tap brake pad pin **(a)** from inner side to outside.

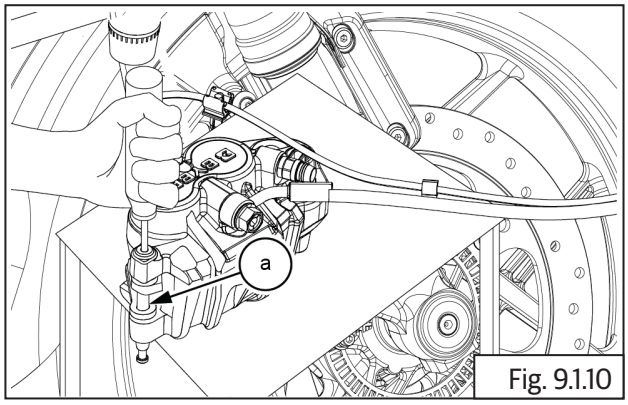

Fig. 9.1.10

	Punch and Hammer

- Once pin **(a)** is free gently pull out pin from brake caliper.

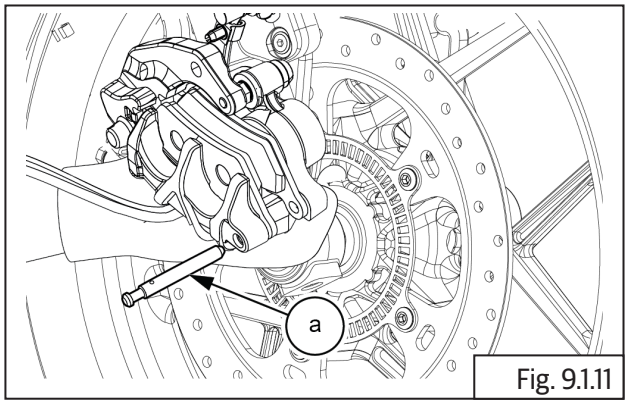

Fig. 9.1.11

- Slide out and remove brake pads **(a)** from brake caliper front.

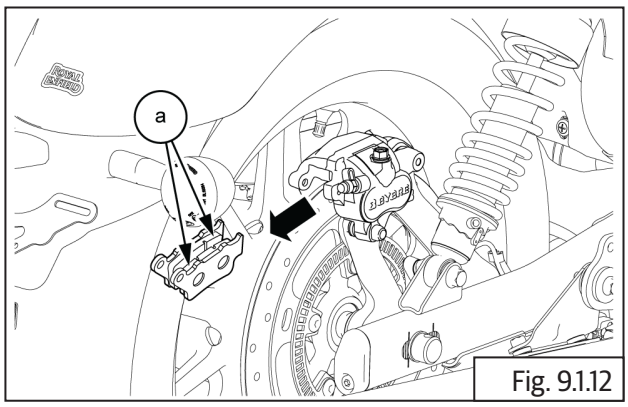

Fig. 9.1.12

Dismantling Front Brake Caliper

- Remove the pad tensioner spring plate **(a)**.

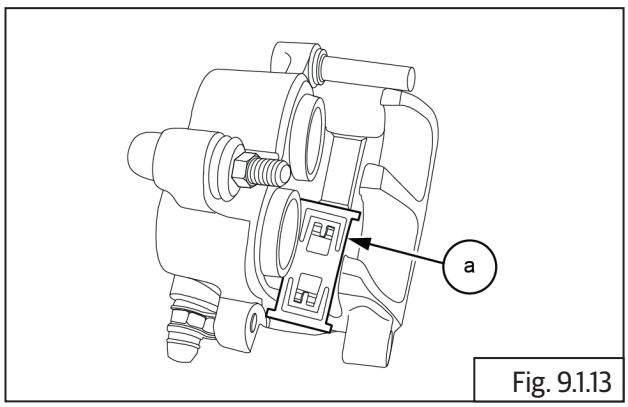

Fig. 9.1.13

- Remove mounting bracket **(a)** from caliper assembly **(b)**.

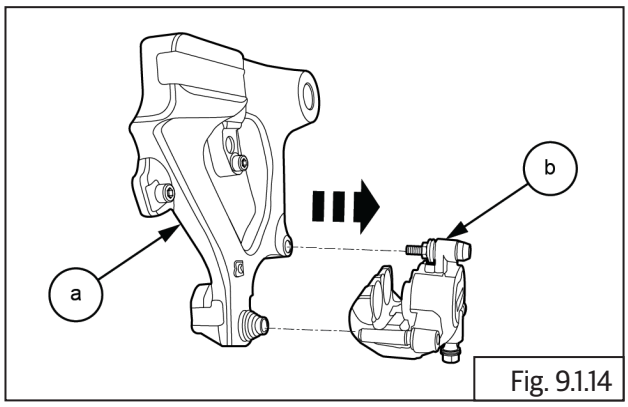

Fig. 9.1.14

- Position caliper body with the pistons down and apply small squirts of air pressure to fluid inlet hole to remove pistons.

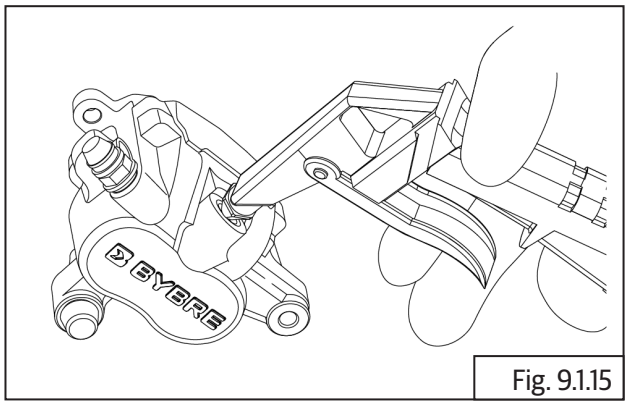

Fig. 9.1.15

⚠ CAUTION

Do not use high pressure air or bring the nozzle too close to the inlet. Place a shop towel over the pistons to prevent the pistons from becoming projectiles. Push the dust seals and piston seals in and lift them out using a blunt tool. Care should be taken to avoid any damages on the bore of the sliding surface.

Enough care should be taken to avoid damages of the piston OD while servicing/handling. Remove the bleed screw.

9.1.3. Brake Disc - Front

- Remove front wheel.
- Ensure wheel assembly is placed on a flat surface with disc plate facing upwards.

⚠ CAUTION

Ensure wheel hub does not get damaged.

- Loosen and remove 5 Nos. Hex socket head bolts **(M8) (a)** from wheel LH in criss cross pattern holding toner ring and brake disc to hub.

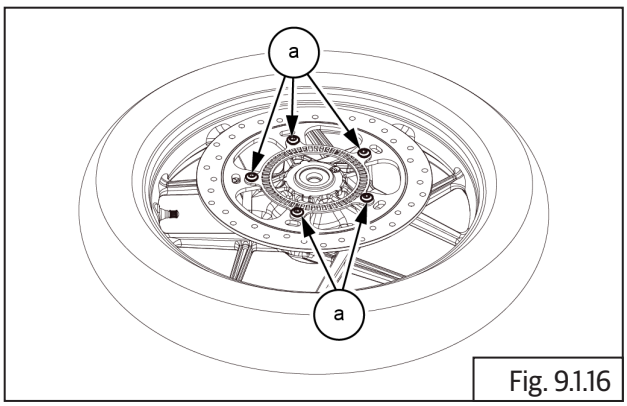

Fig. 9.1.16

	6 mm Allen socket with Ratchet

⚠ WARNING

DO NOT place/store the wheel with disc facing downward. It will cause bends and damages and change warpage.

- Remove toner wheel **(a)** and keep it aside safely.

⚠ CAUTION

Avoid any bends or damages to the toner wheel as it will have serious effects on ABS performance.

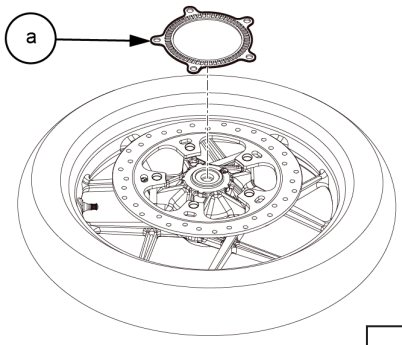

Fig. 9.1.17

- Remove front brake disc **(a)**.

⚠ CAUTION

Avoid any bends or damages to the brake disc as it will have serious effects on braking efficiency and will lead to juddering.

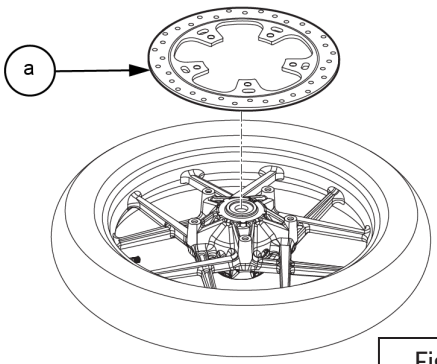

Fig. 9.1.18

9.2. Brake - Rear

⚠ CAUTION

Ensure the motorcycle is upright on a firm and flat surface.

Support motorcycle with suitable equipment below swing arm frame.

- Position the screw jack directly under the boss of the crank case.
- Carefully use the screw jack to lift the motorcycle until the front wheel is off the ground.
- Make sure the motorcycle is stable and secure before performing any maintenance or repairs.

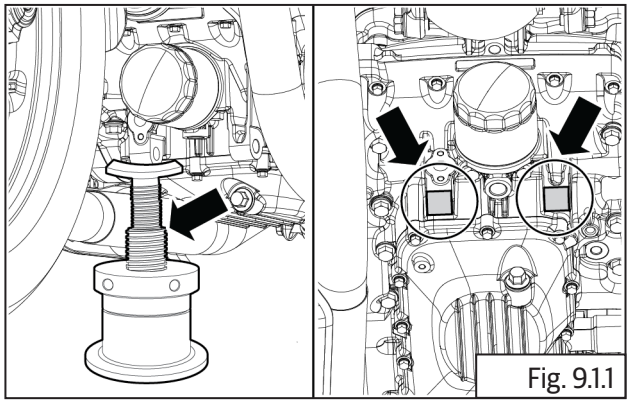

Fig. 9.1.1

9.2.1. Master Cylinder Assembly - Rear

- Remove the reservoir panel **(a)** from RHS side panel.

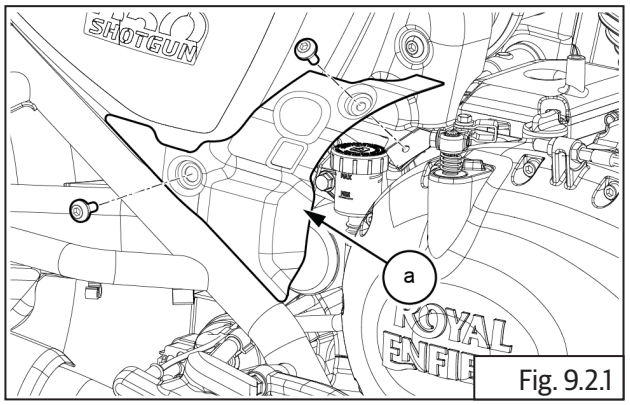

Fig. 9.2.1

- Remove the RHS side panel **(a)** .

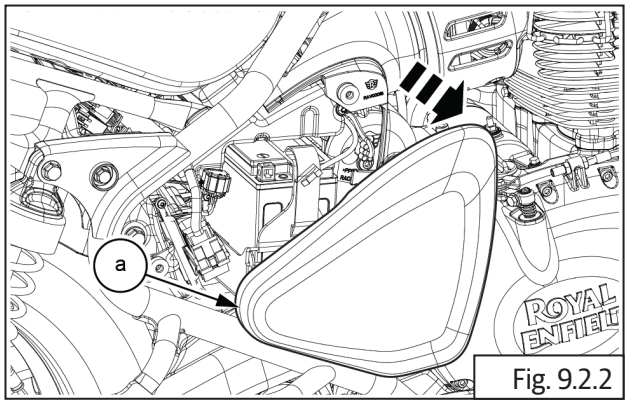

Fig. 9.2.2

- Loosen and remove 2 Nos. Hex head bolts **(M6) (a)** to remove master cylinder guard.

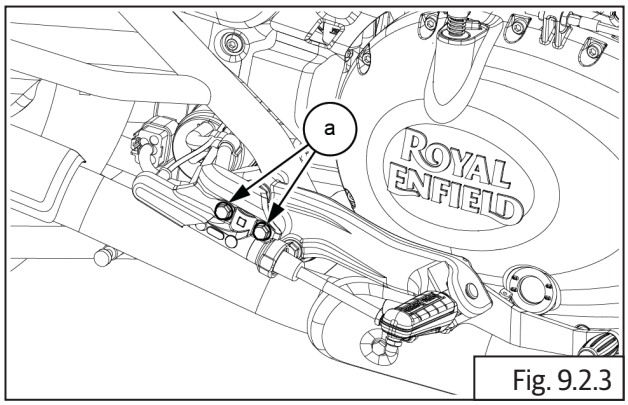

Fig. 9.2.3

	10 mm socket with Ratchet

- Remove master cylinder guard **(a)** from RH rear brake master cylinder.

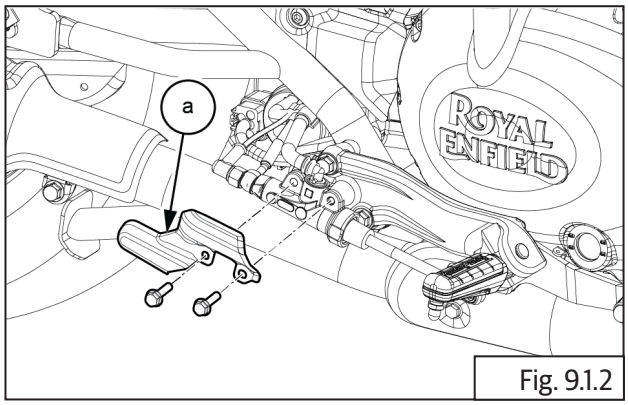

Fig. 9.1.2

- Remove the brake hose clip **(a)** from master cylinder assembly .

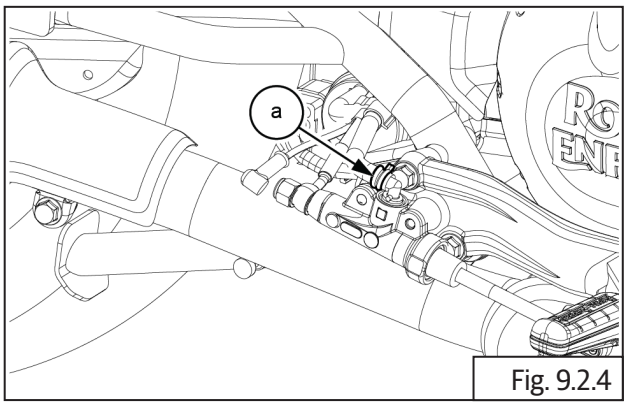

Fig. 9.2.4

- Collect brake fluid in container **(a)**.

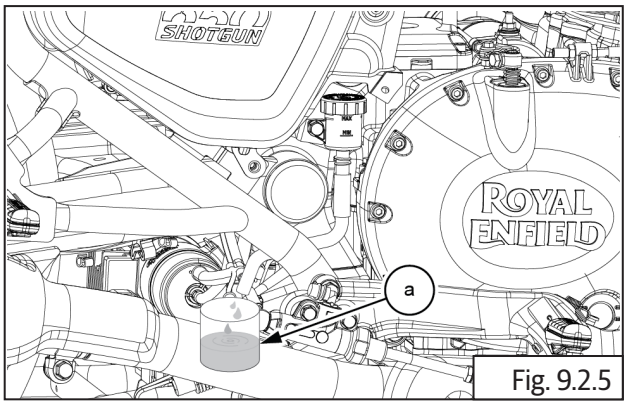

Fig. 9.2.5

- Loosen and remove brake lamp switch nut **(M8) (a)**.

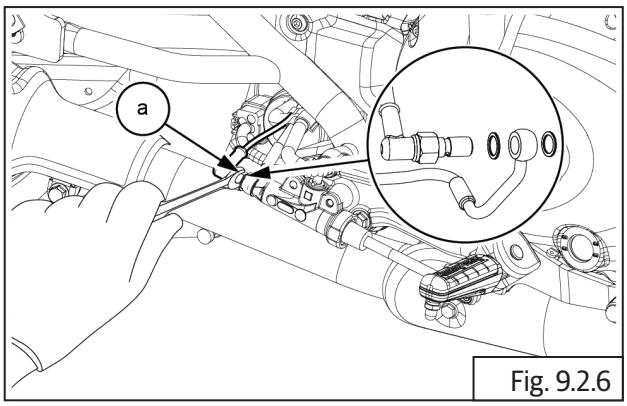

Fig. 9.2.6

	14 mm Double end spanner

- Remove pivot lock **(a)** from rear master cylinder.

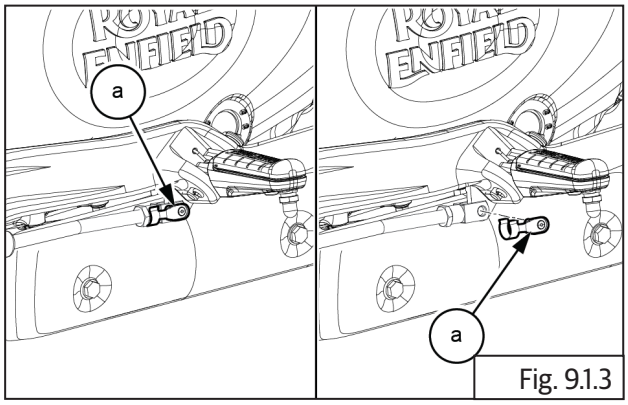

Fig. 9.1.3

	Plier

- Remove master cylinder assembly **(a)** from chassis frame.

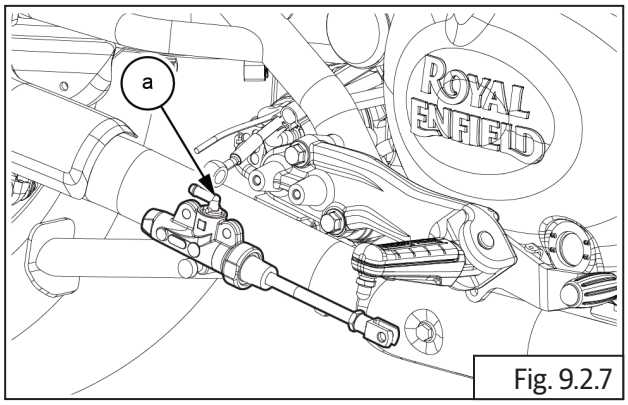

Fig. 9.2.7

Dismantling Rear Brake Master Cylinder

- Remove protective rubber boot from master cylinder.

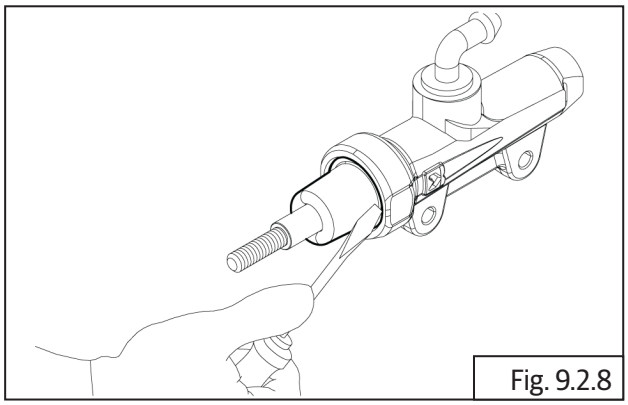
Fig. 9.2.8

	Screw driver

- Remove circlip **(a)** from the master cylinder body **(b)**.

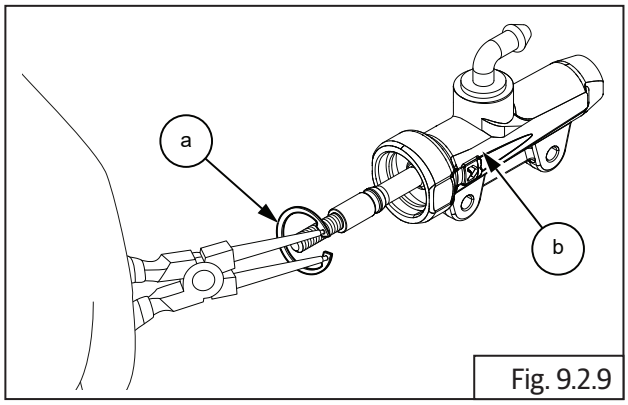

Fig. 9.2.9

	Circlip plier

- Gently pull out bush **(a)** with piston **(b)**, seals, spring guide and conical spring from master cylinder housing **(c)**.

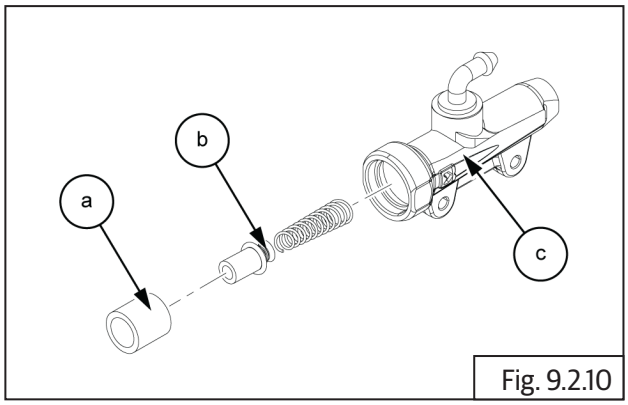

Fig. 9.2.10

⚠ CAUTION

Do not use any sharp tool to pull out the piston from the master cylinder. Pull out gently with minimum force.

Rear Brake Pedal

- Remove the spring **(a)** from brake pedal.

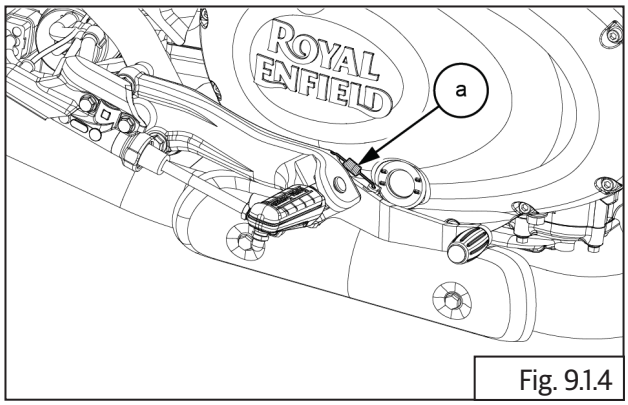

Fig. 9.1.4

	Screw Driver

- Remove allen head bolt **(a) (M8)** from brake pedal.

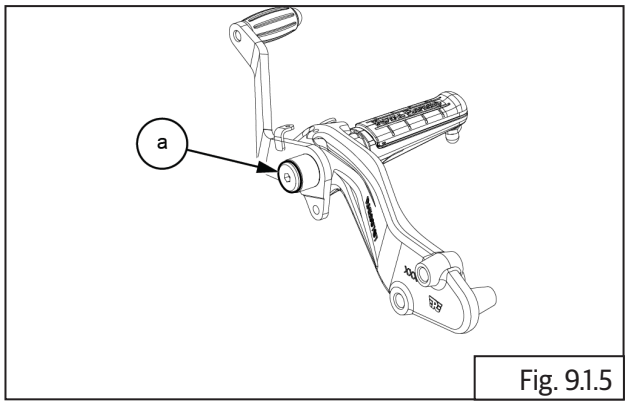

Fig. 9.1.5

	6 mm Allen Socket with Ratchet

- Remove allen bolt **(a)** along with bush **(b)** from RH control plate.

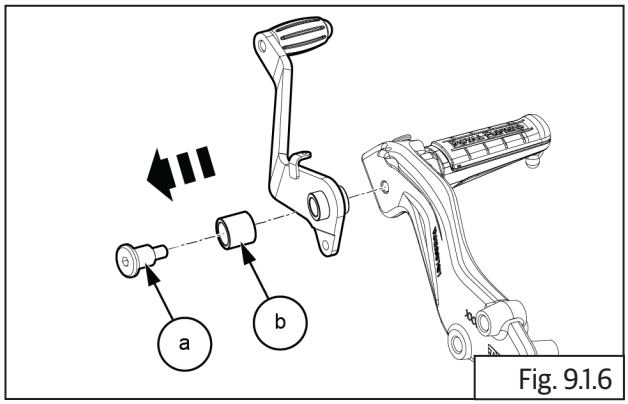

Fig. 9.1.6

- Remove hex bolt **(a) (M6)** from master cylinder reservoir.

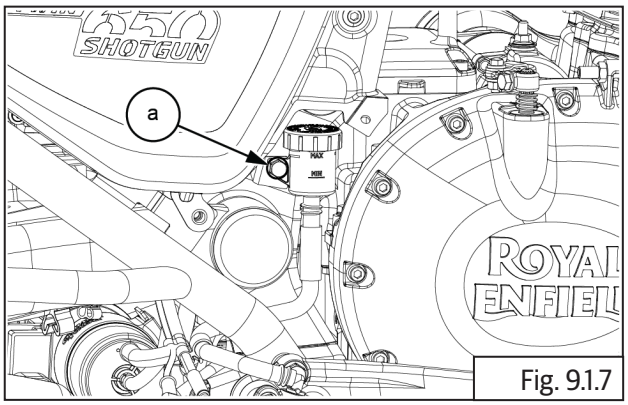

Fig. 9.1.7

	10 mm Socket with Ratchet

9.2.2. Brake Caliper Assembly - Rear

- Loosen and remove Hex socket head screw **(M6) (a)** rear wheel speed sensor **(b)**.

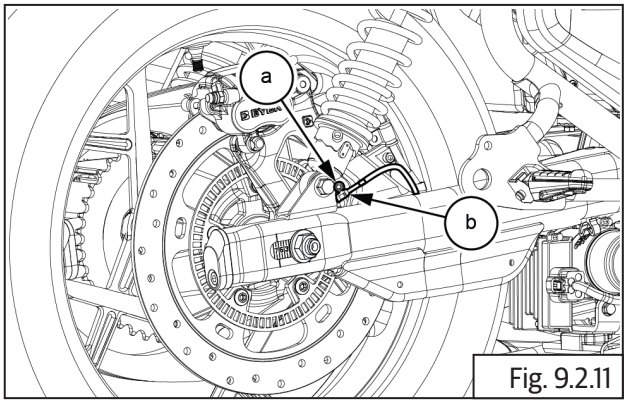

Fig. 9.2.11

	5 mm Allen socket with Ratchet

- Gently remove rear wheel speed sensor **(b)** with sim **(a)** from brake caliber assembly.

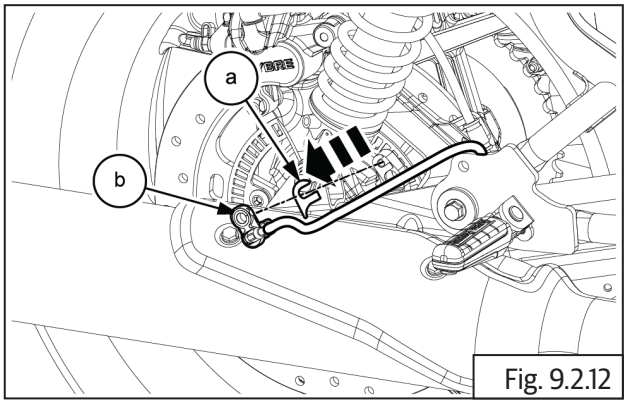

Fig. 9.2.12

- Remove brake pad clip **(a)** from brake pad lock pin.

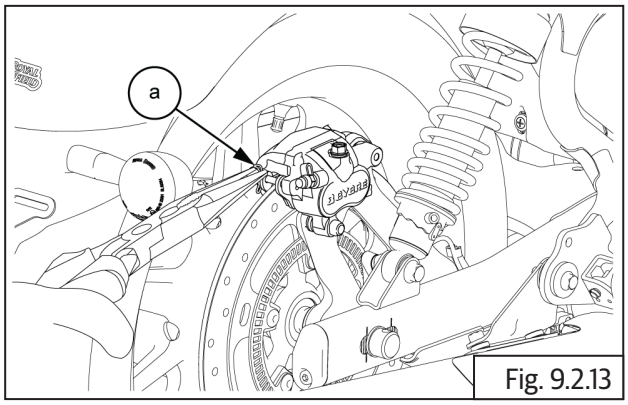

Fig. 9.2.13

	Nose plier

- Remove brake pad lock pin **(a)** from brake caliper.

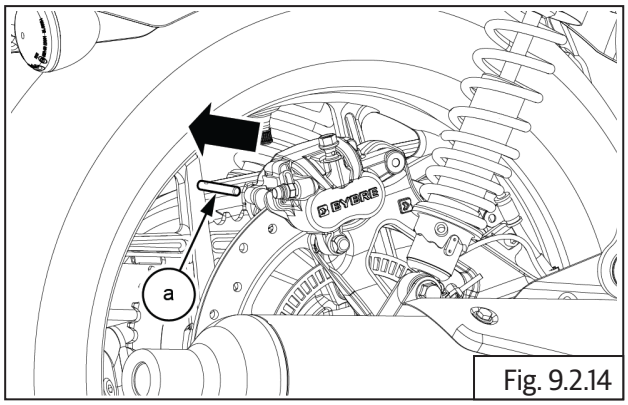

Fig. 9.2.14

	Screw Driver

- Slide out and remove brake pads **(a)** from brake caliper.

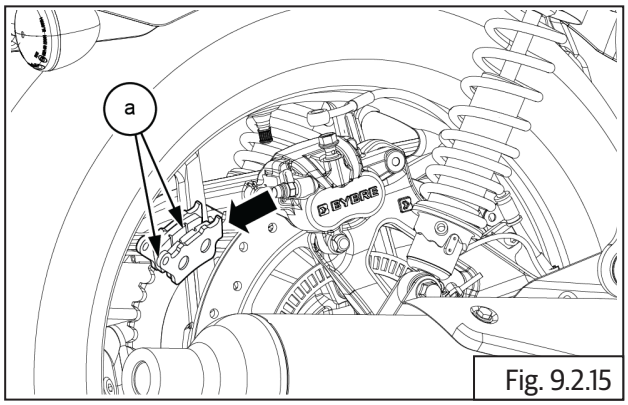

Fig. 9.2.15

- Slide out and remove brake caliper **(a)** with holder.

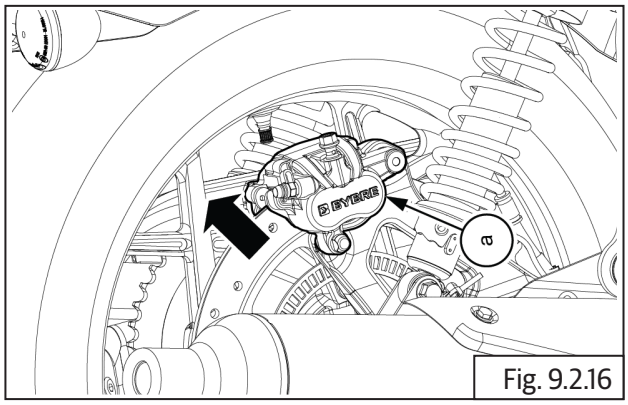

Fig. 9.2.16

Dismantling Rear Brake Caliper

- Separate the mounting bracket **(a)** from the caliper assembly **(b)** .

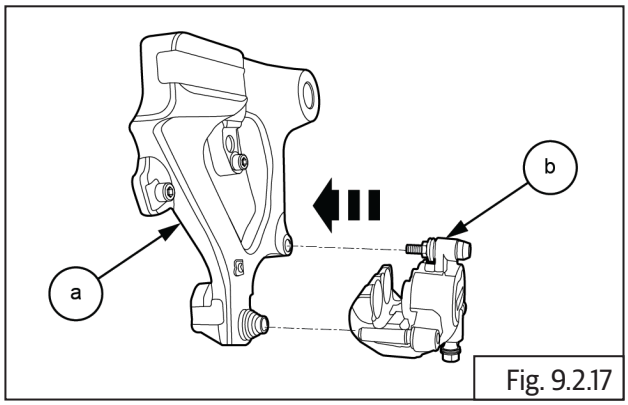

Fig. 9.2.17

- Position caliper body with pistons down and apply small squirts of air pressure to the fluid inlet hole to remove pistons.

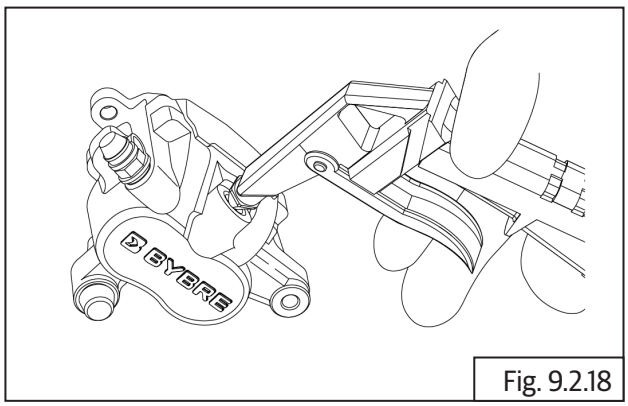
Fig. 9.2.18

⚠ CAUTION

DO NOT use high pressure air or bring the nozzle too close to the inlet. Place a shop towel over the pistons to prevent the pistons from becoming projectiles. Push the dust seals and piston seals in and lift them out using a blunt tool. Care should be taken to avoid any damage on the bore of the sliding surface.

Enough care should be taken to avoid damages of the piston OD while servicing/handling. Remove the bleed Screw.

9.2.3. Brake Disc - Rear

- Remove drive chain and rear wheel from swing arm.
- Loosen and remove 6 Nos. Hex head button socket screws **(M6) (a)** from rear wheel disc hub RH.

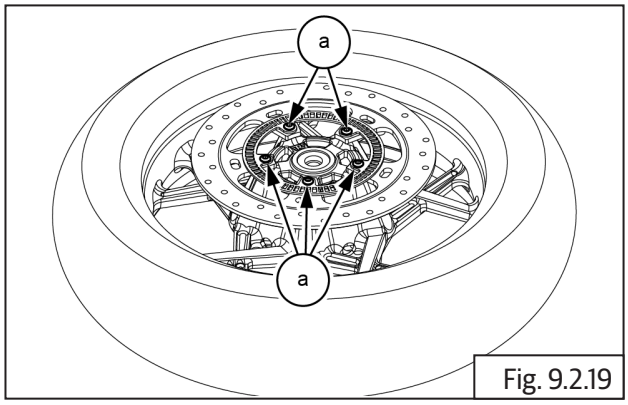

Fig. 9.2.19

	5 mm Allen socket with Ratchet

- Remove ABS toner wheel **(a)** from rear wheel hub RH.

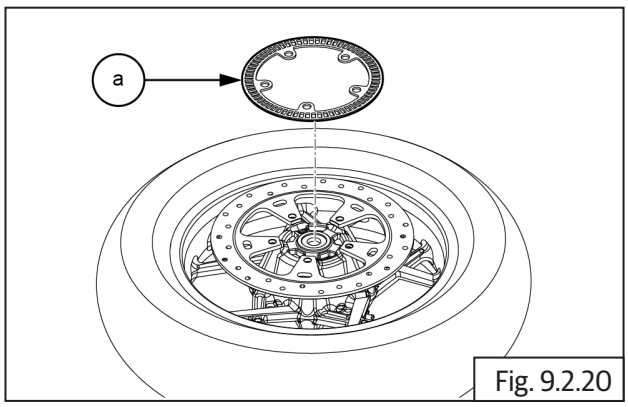

Fig. 9.2.20

- Remove rear disc plate **(a)** from rear wheel hub RH and keep aside safely.

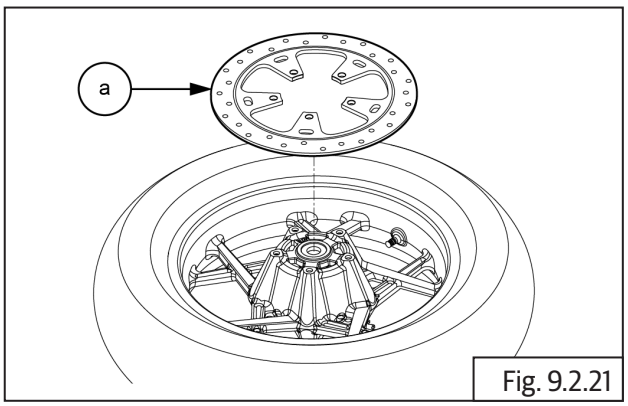

Fig. 9.2.21

Inspection

- Inspect for rust, deep scoring, any foreign materials, burn marks crack in the mounting location of front and rear brake discs.
- Inspect front and rear brake disc thickness and run-out. Measure depth at points where scoring is found on the discs and replace if there is excess wear. (Need to confirm).

Standard:	0.00 mm
Service limit:	0.10 mm

- Also measure thickness at the points indicated in the illustration and replace disc if out of specifications.

Front brake disc.

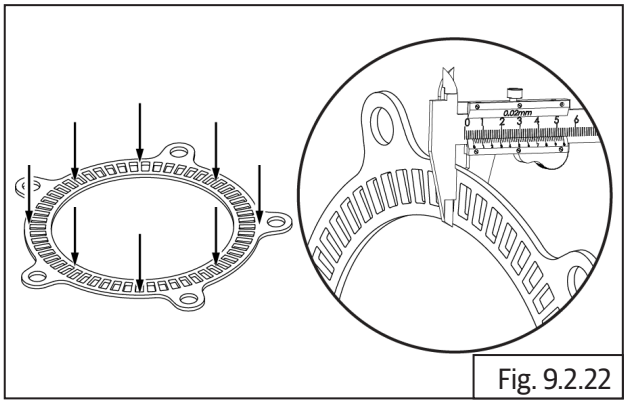
Fig. 9.2.22

Rear brake disc.

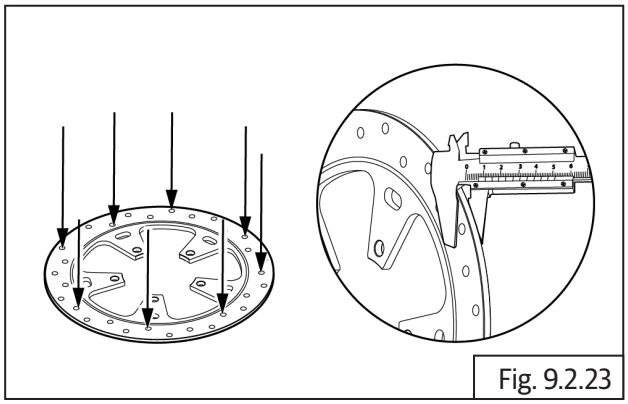

Fig. 9.2.23

	Vernier caliper

Service limit:	0.8 mm

- Place brake disc rotor on a flat surface and inspect war page. Replace if it is out of specifications.

Front brake disc.

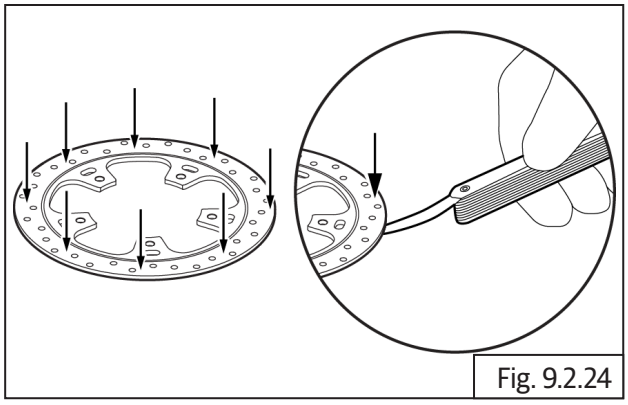

Fig. 9.2.24

Rear brake disc.

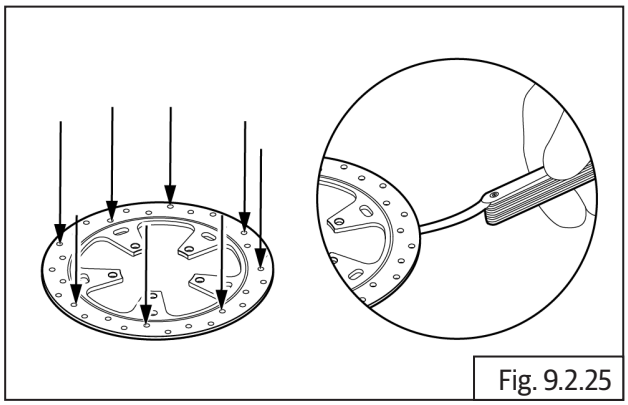

Fig. 9.2.25

	Feeler gauge

Standard:	0.00 mm
Service limit:	0.10 mm

- Inspect and replaces toner wheel rear ABS if there are any damages bends.
- Place ABS toner wheel on a flat surface and check warpage. Replace if out of specifications.

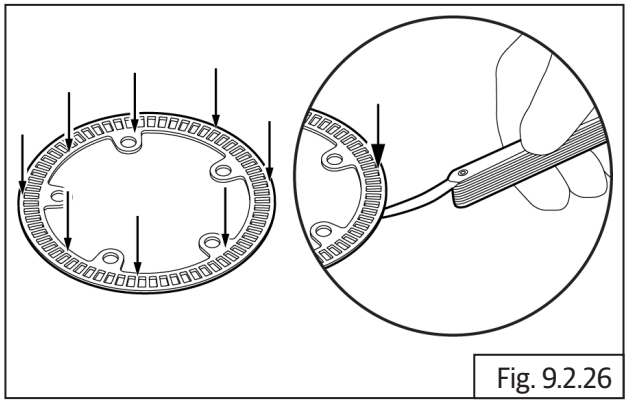

Fig. 9.2.26

	Feeler gauge

Standard:	0.00 mm
Service limit:	0.10 mm

- After assembly of brake disc **(a)** into front wheel, insert spindle into rim, fix on wheel balance frame **(c)** and rotate rim to check the disc run-out with dial gauge **(b)**. Ensure run-out is within specified limits.

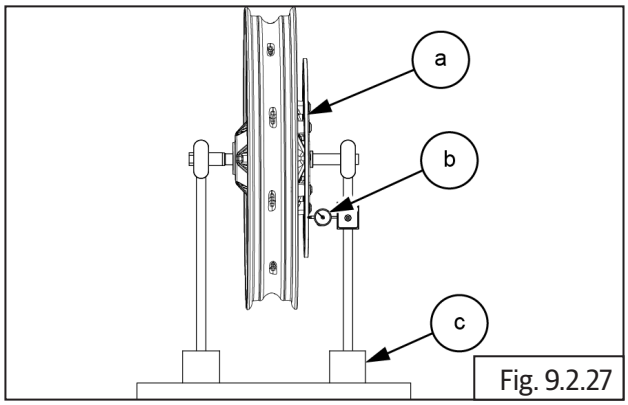

Fig. 9.2.27

	Dial gauge

Service limit:	1 mm

⚠ CAUTION

Run-out of brake disc should be checked only when brake disc is assembled on wheel hub.

- Inspect brake pad thickness- front and rear. Replace if worn-out.

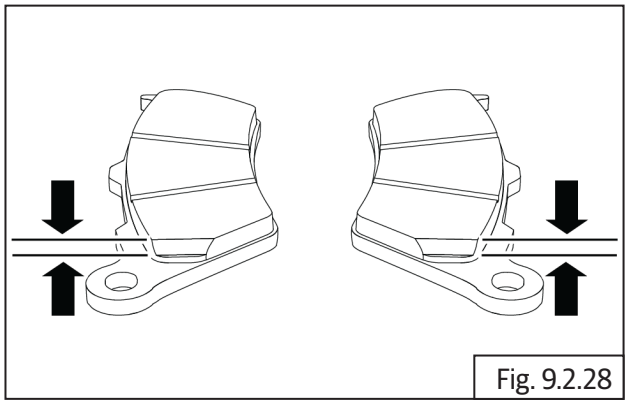

Fig. 9.2.28

- Check brake fluid level and top up if line is below 'MIN' level **(a)**.

Front

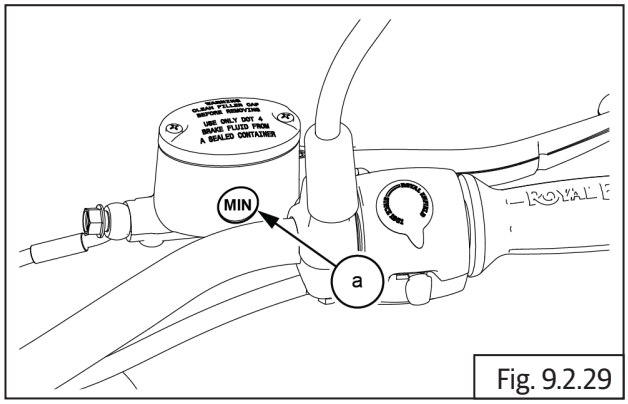

Fig. 9.2.29

Rear

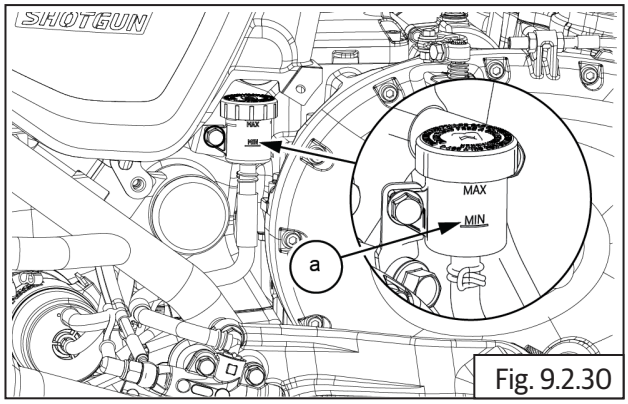

Fig. 9.2.30

⚠ CAUTION

DO NOT mix DOT 4 and other brake fluids together

- Inspect brake lever front free play and brake pedal rear free play. If free play is spongy, check brake pads for wear or tear and replace after follow brake bleeding procedure.

Front

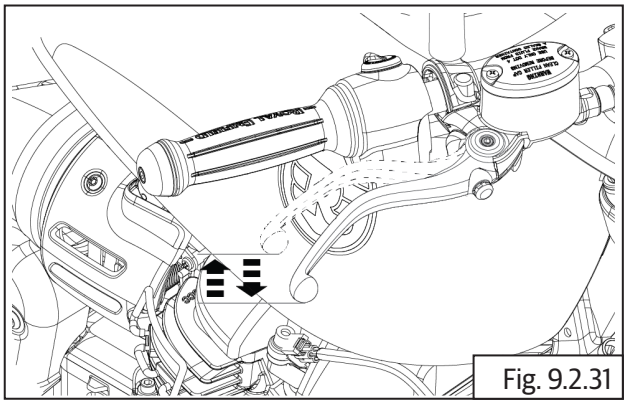

Fig. 9.2.31

Rear

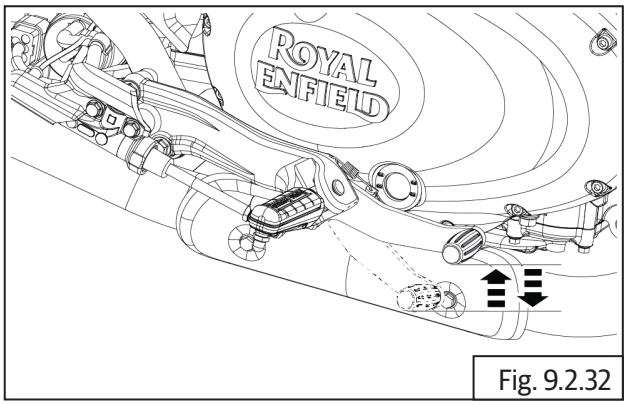

Fig. 9.2.32

- Inspect and replace front and rear brake hoses **(a)** if they have any cracks, leakages or damages.

Front

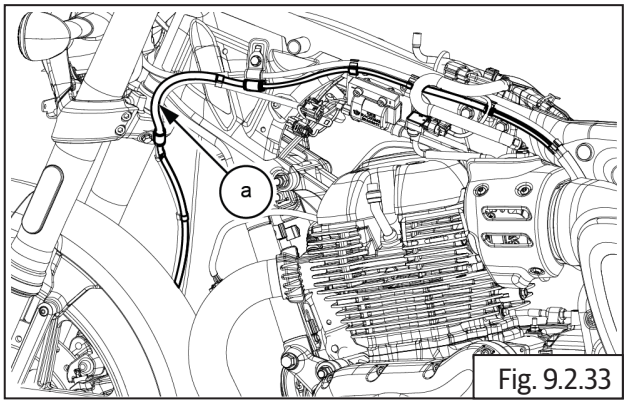

Fig. 9.2.33

Rear

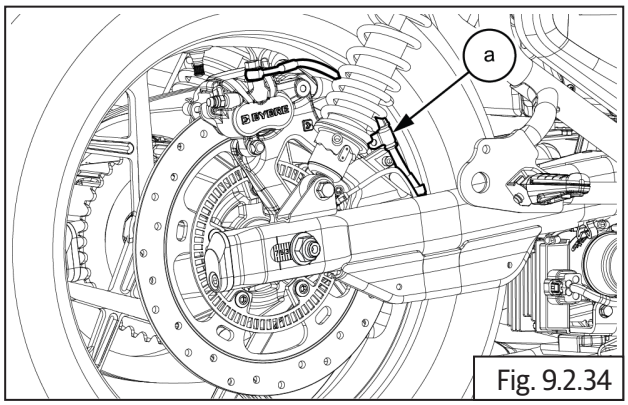

Fig. 9.2.34

Assembly

Brake - Rear

9.2.4. Brake Disc - Rear

- Assemble rear disc plate **(a)** into rear wheel hub RH .

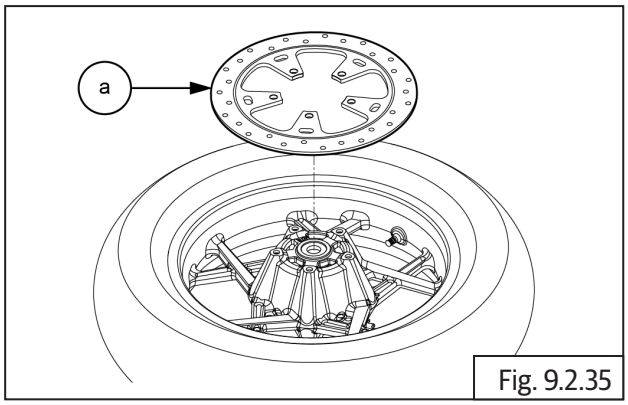

Fig. 9.2.35

- Assemble ABS toner **(a)** into rear wheel hub RH.

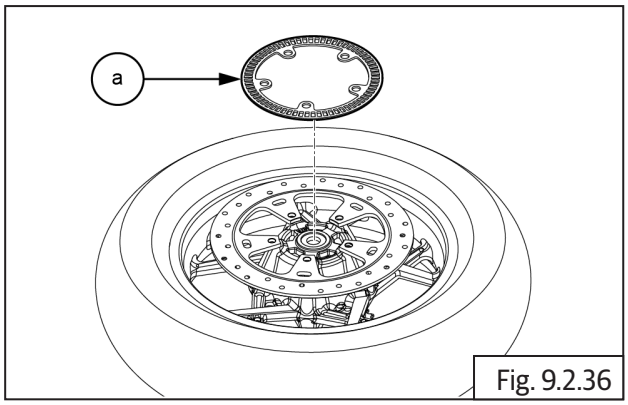

Fig. 9.2.36

- Insert and tighten 6 Nos. Hex head button screws **(M6) (a)** into rear wheel disc hub RH.

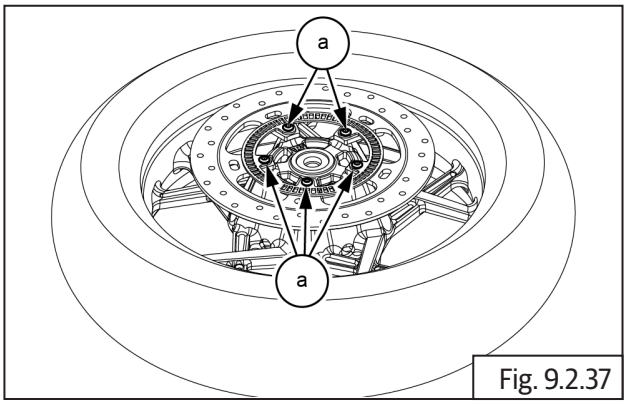

Fig. 9.2.37

	5 mm Allen socket with Ratchet
Torque	10 N-m/1.0 kgf-m

- Assemble drive chain and rear wheel into swing arms.

9.2.5. Brake Caliper Assembly - Rear

Assembling Rear Brake Caliper

- Coat fresh brake fluid on new dust seals and piston seals.
- Install piston seals in the inner groove **(a)** and dust seals in the outer groove **(b)** in the bore in caliper assembly.

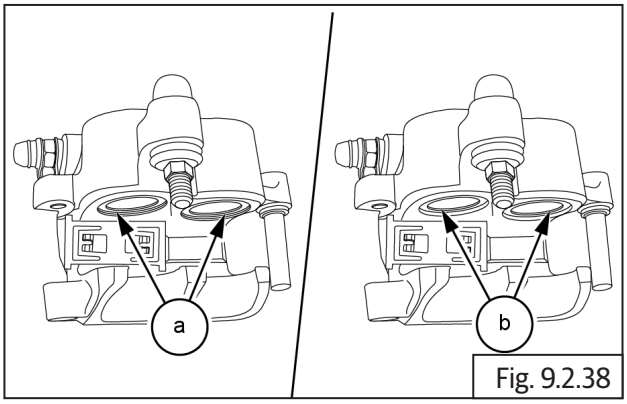

Fig. 9.2.38

- Coat the caliper cylinder and piston with fresh brake fluid.
- Insert the closed end of the piston into the caliper bore and gently press it into caliper fully till the open ends of the piston are flush with the caliper bore outer edge

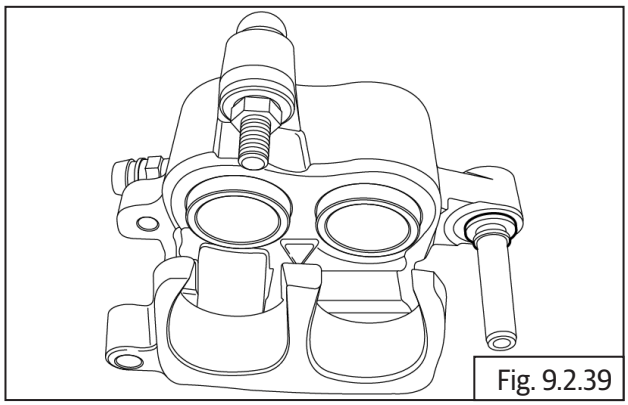

Fig. 9.2.39

⚠ CAUTION

DO NOT apply force while assembling the piston into the caliper. Press only with minimal hand pressure.

- Assemble the rubber grommets on the bracket mounting area of the caliper.

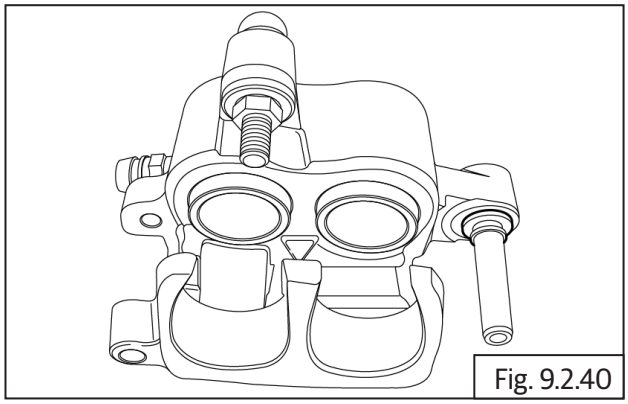

Fig. 9.2.40

- Locate bracket **(a)** on the caliper **(b)** and gently press caliper into bracket fully.

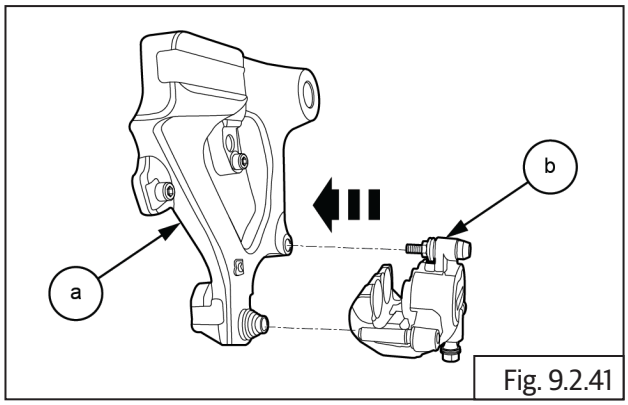

Fig. 9.2.41

- Install the pad tension spring plate **(a)** on the Caliper body.

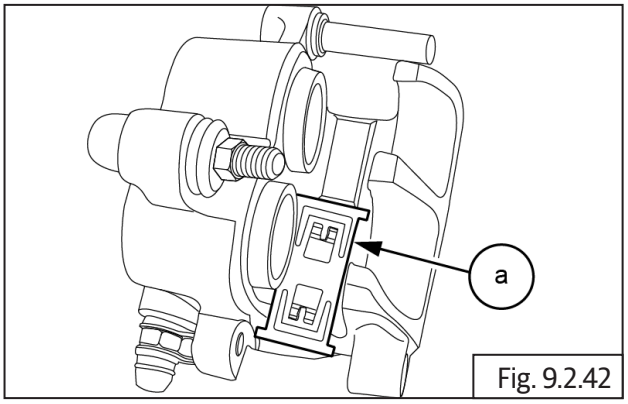

Fig. 9.2.42

- Assemble Bleed screw **(a)** with the dust cap on the caliper body.

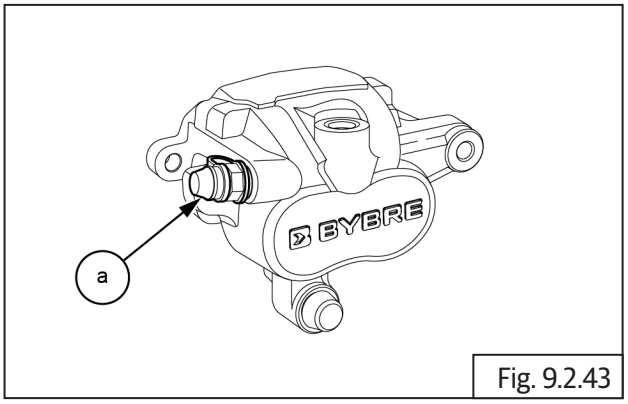

Fig. 9.2.43

- Gently locate brake caliper **(a)** with holder onto brake disc.

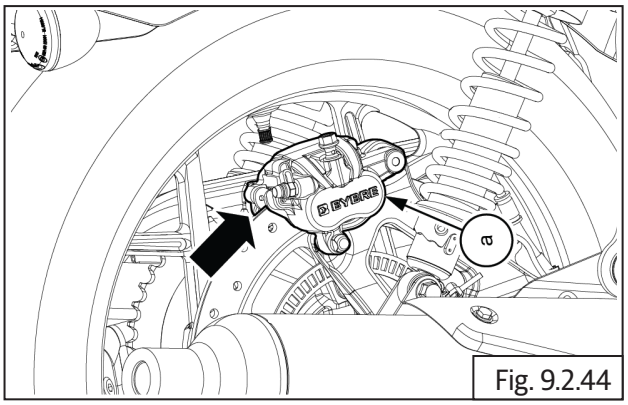

Fig. 9.2.44

Rear Brake Pads in Wheel Caliper

- Gently locate brake pads **(a)** into brake caliper.

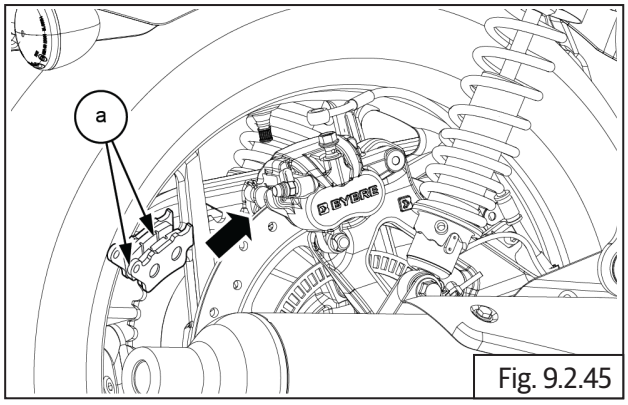

Fig. 9.2.45

- Locate brake pad lock pin **(a)** into brake caliper.

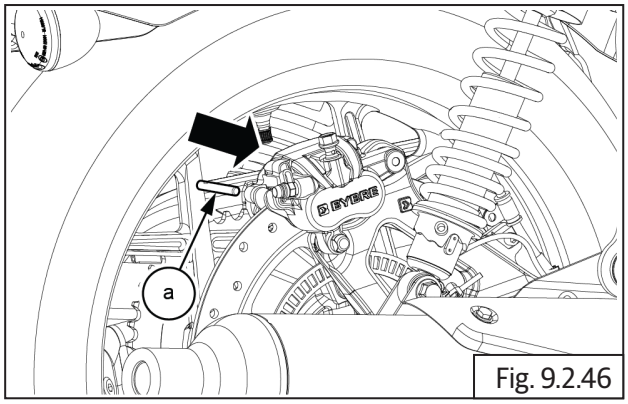

Fig. 9.2.46

	Screw Driver

- Install brake pad inner clip **(a)** into brake pad lock pin.

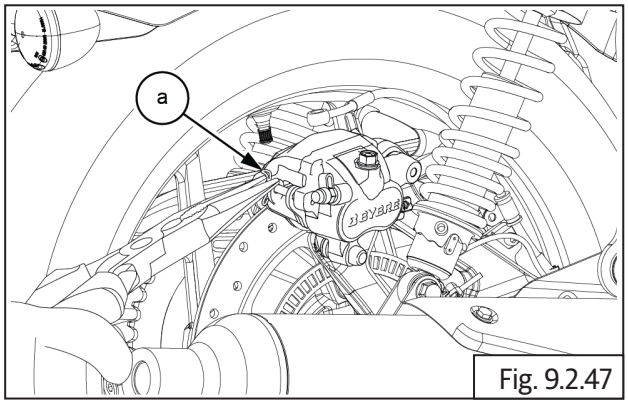

Fig. 9.2.47

	Nose plier

- Gently assemble rear wheel speed sensor **(a)** into rear wheel hub.
- Locate and tighten Hex socket head screw **(M5) (a)** located below brake caliper on rear wheel RH.

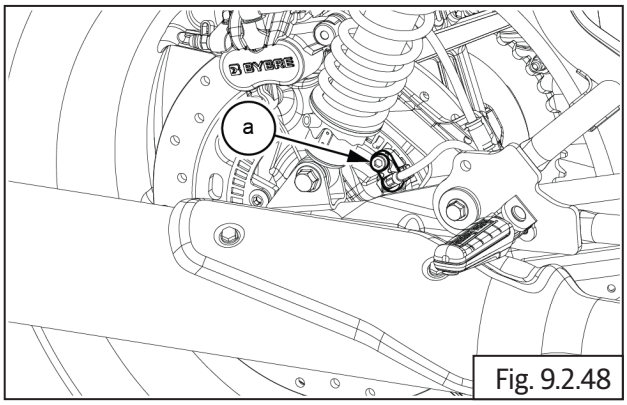

Fig. 9.2.48

	4 mm Allen socket with Ratchet

- Assemble swing arm bolt, spindle and chain adjuster assembly into rear wheel.

9.2.6. Master Cylinder Assembly - Rear

- Locate new O-ring inside the master cylinder bore.

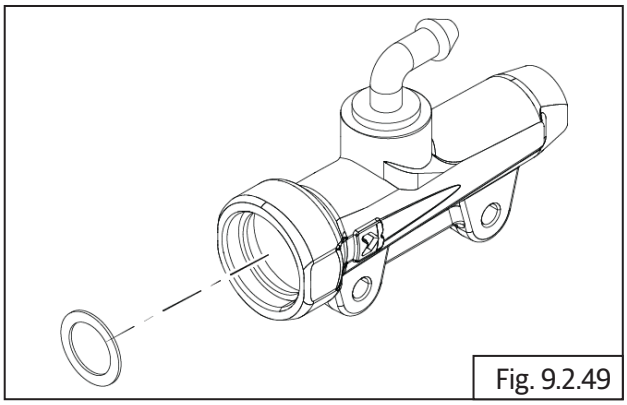
Fig. 9.2.49

⚠ CAUTION

DO NOT use any sharp tool to assemble the O ring or piston in the master cylinder.

- Assemble spring guide on the small end of spring.
- Locate peg on piston, on spring guide.
- Locate large bush over the piston.

- Insert large end of the spring along with the piston and guide bush into the master cylinder bore and hold it in compressed position inside master cylinder.
- Assemble Circlip **(a)** in the master cylinder body **(b)** and ensure it is locked properly in the groove.

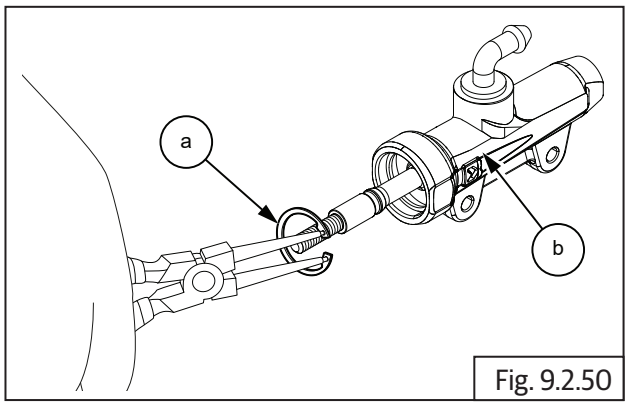

Fig. 9.2.50

	Circlip plier

- Assemble the protective rubber boot on the master cylinder.

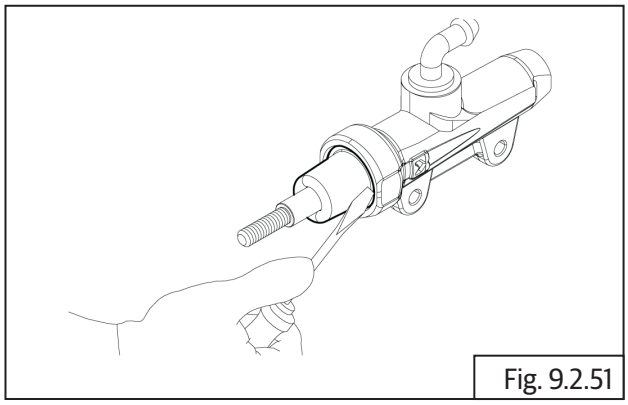
Fig. 9.2.51

	Screw driver

- Locate brake pedal along with bush **(b)** and screw **(a)** into RH control plate.

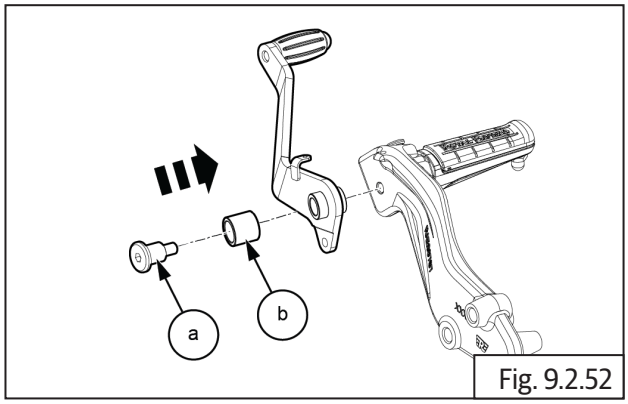

Fig. 9.2.52

- Insert and tighten allen screw **(M8) (a)** to fix master cylinder bracket on brake pedal.

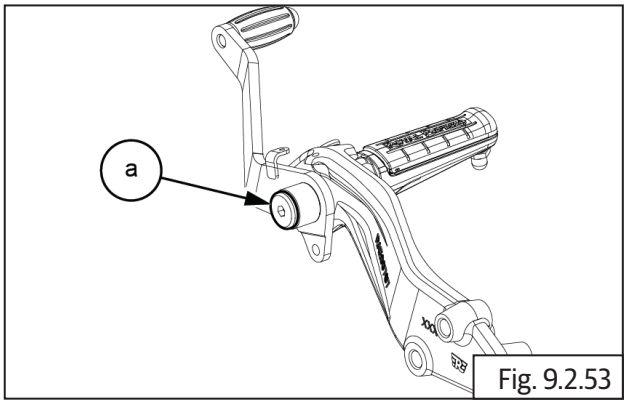

Fig. 9.2.53

	6 mm Allen socket with Ratchet
Torque	25 N-m/2.5 kgf-m

- Locate the rear master cylinder **(a)** into the control plate.

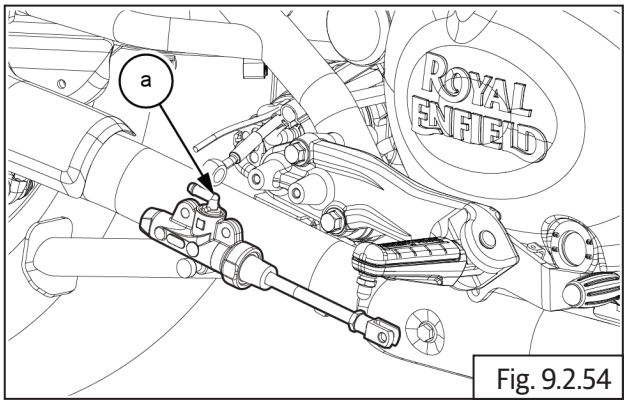

Fig. 9.2.54

- Insert and tighten 2 Nos. Hex socket bolts **(M6) (a)** with master cylinder guard **(b)** to fix master cylinder.

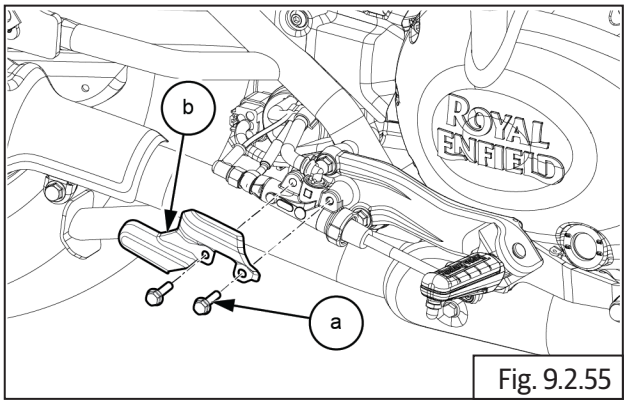

Fig. 9.2.55

	10mm socket with Ratchet
Torque	12 N-m / 1.2 kgf-m

- Locate fluid reservoir on the frame.
- Insert and tighten Hex socket bolt **(M6) (a)** to fix fluid reservoir **(b)**.

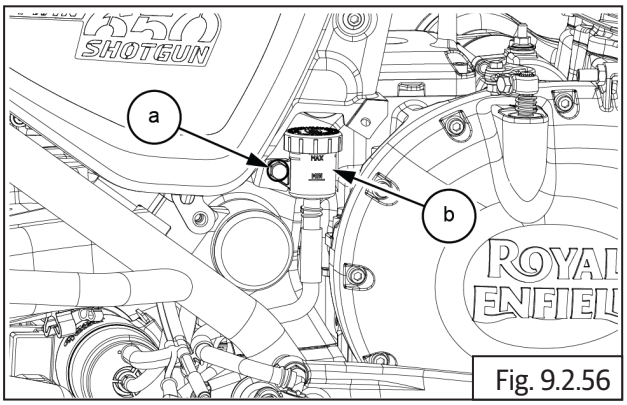

Fig. 9.2.56

	10mm socket with Ratchet
Torque	3 N-m/0.3 kgf-m

- Insert clevis pin **(a)** into the master cylinder assembly.

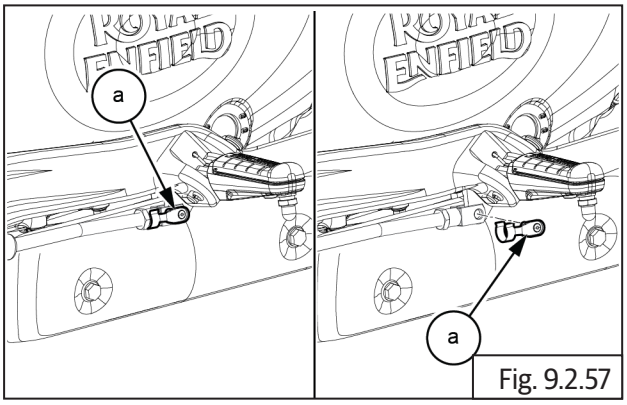

Fig. 9.2.57

	Nose plier

- Install brake hose clip **(a)** into brake fluid reservoir near master cylinder assembly .

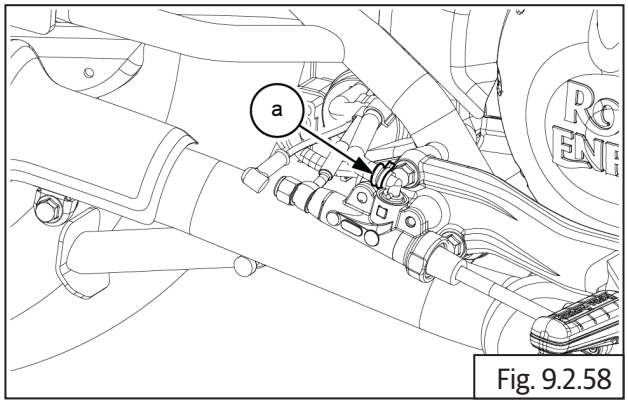

Fig. 9.2.58

Brake - Front

9.2.7. Brake Disc - Front

- Locate front brake disc **(a)** on front wheel hub and disc facing outward. Ensure mounting holes are correctly aligned.

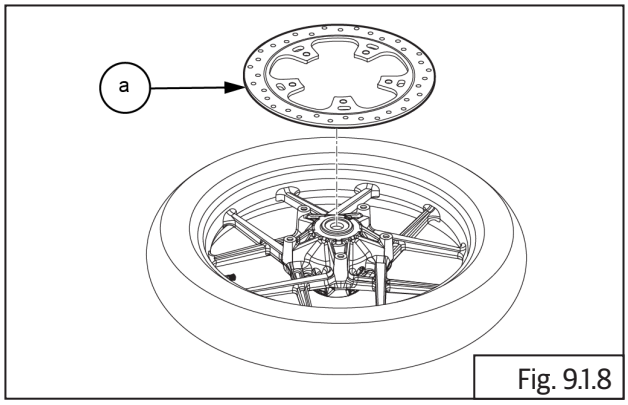

Fig. 9.1.8

- Position toner wheel **(a)** onto front disc and ensure mounting holes are correctly aligned.
- If bolts are pre-coated bolts replace with new ones.
- If they are non-coated, clean threads and wait for few minutes and apply thread sealant.

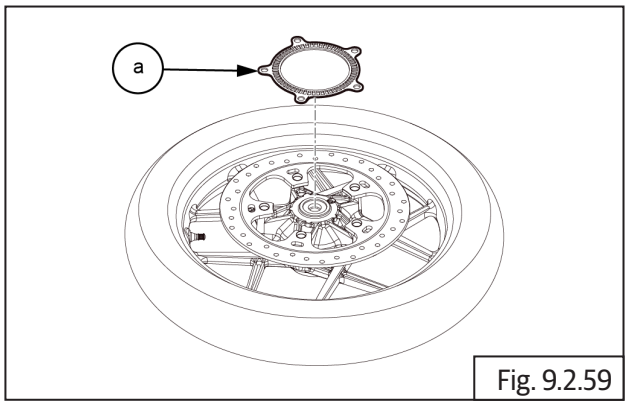

Fig. 9.2.59

- Insert 5 Nos. Hex socket head bolts **(M8) (a)** into brake disc LH and tighten in criss cross pattern to specified torque.

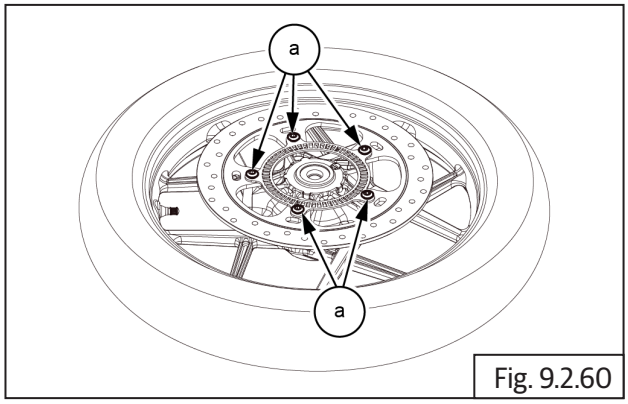

Fig. 9.2.60

	6 mm Allen socket with Ratchet
Torque	25 N-m/2.5 kgf-m

- Assemble front wheel into front fork assembly.

9.2.8. Brake Caliper - Front

- Coat fresh brake fluid on new dust seals and piston seals.
- Install piston seals in inner groove **(a)** and dust seals in outer groove **(b)** in the bore in caliper assembly.

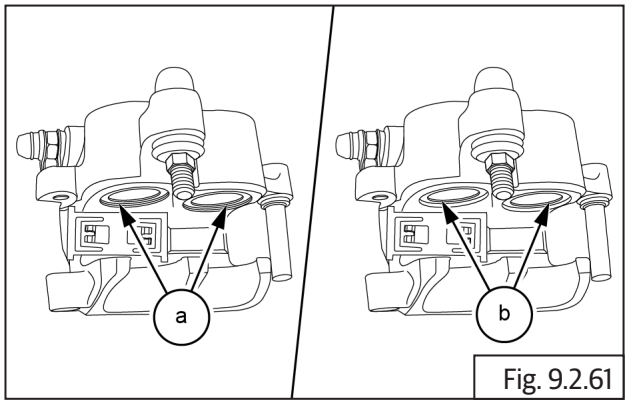

Fig. 9.2.61

- Coat the caliper cylinders and pistons with fresh brake fluid.
- Insert closed end of the pistons into caliper bores and gently press it into caliper fully till open ends of the piston are flush with caliper bore outer edge.

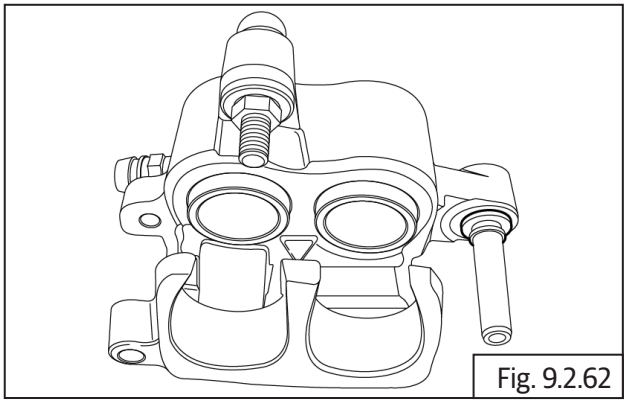
Fig. 9.2.62

NOTE

- *Do not apply force while assembling the pistons into the caliper. Press only with minimal hand pressure. Assemble pistons one at a time into the caliper.*

- Smear fresh brake fluid on the caliper boot and bellow and assemble them on the caliper body.

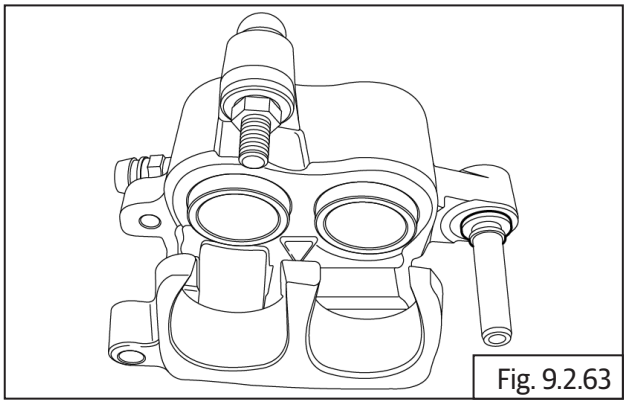
Fig. 9.2.63

- Install pad tension spring plate **(a)** in caliper body.

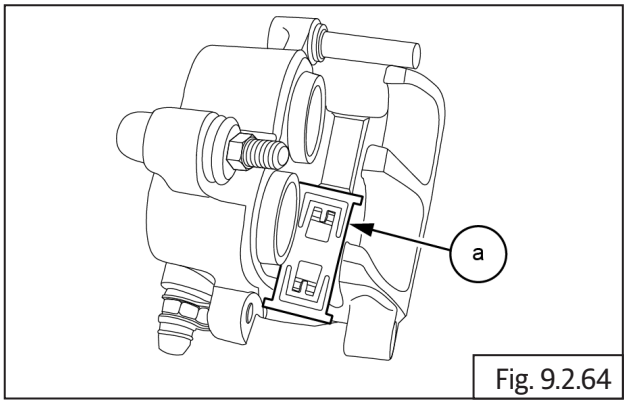

Fig. 9.2.64

- Assemble bleeder valve **(a)** with dust cap on the caliper body.

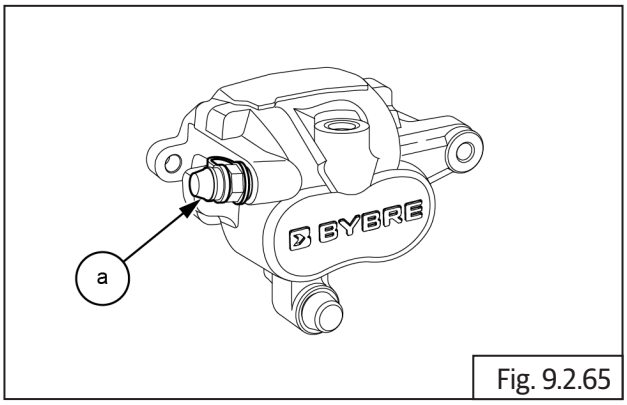

Fig. 9.2.65

- Assemble the mounting bracket **(a)** on caliper body **(b)**.

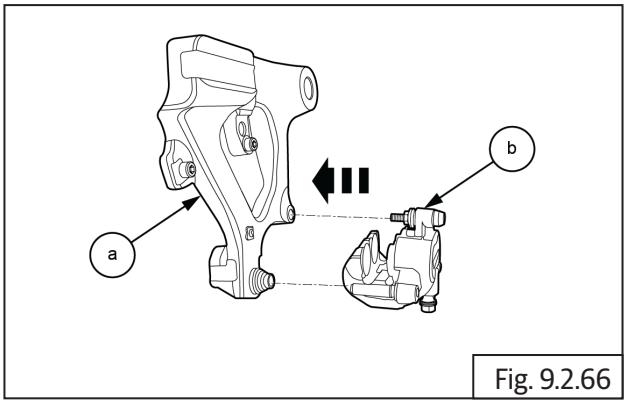

Fig. 9.2.66

- Slide in and assemble brake pads **(a)** into brake caliper.

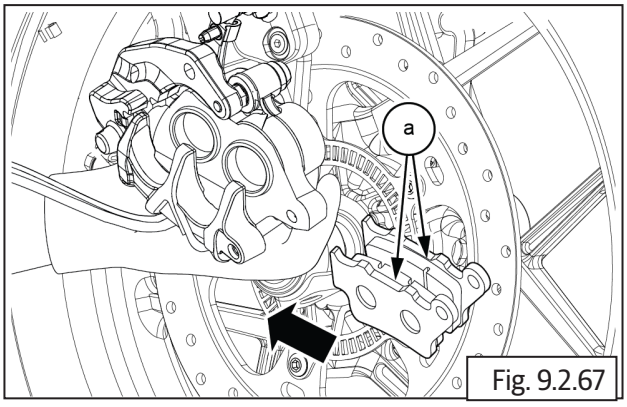

Fig. 9.2.67

- Lubricate and insert brake pad pin **(a)** into caliper.

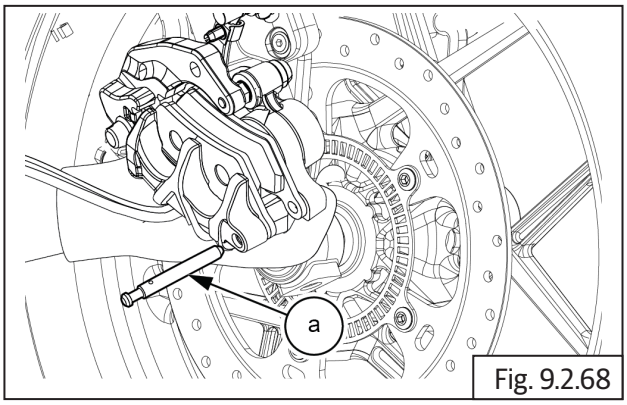

Fig. 9.2.68

- Suitably support caliper and correctly tap brake pad pin **(a)** from outside to inside.

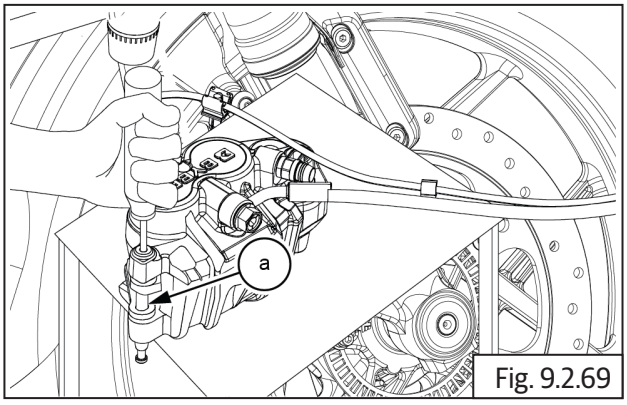

Fig. 9.2.69

	Pin punch and Mallet

- Assemble brake pad lock clip **(a)** into the brake pad pin.

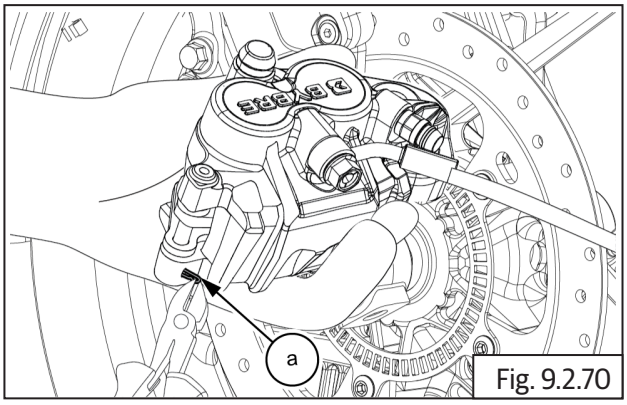

Fig. 9.2.70

	Nose plier

- Support and hold the front brake caliper assembly suitably onto the front RH fork.
- Locate and tighten upper and lower Hex flange head bolts **(M10) (a)** to fix front brake caliper assembly **(b)** to RH fork.

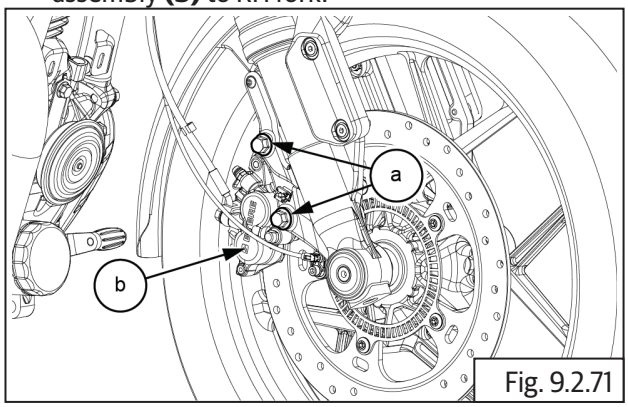

Fig. 9.2.71

	14 mm Socket with Ratchet
Torque	45 N-m/4.5 kgf-m

- Gently install hose into caliper assembly.

9.2.9. Master cylinder - Front

- Locate the conical spring **(a)** on the piston **(b)**.

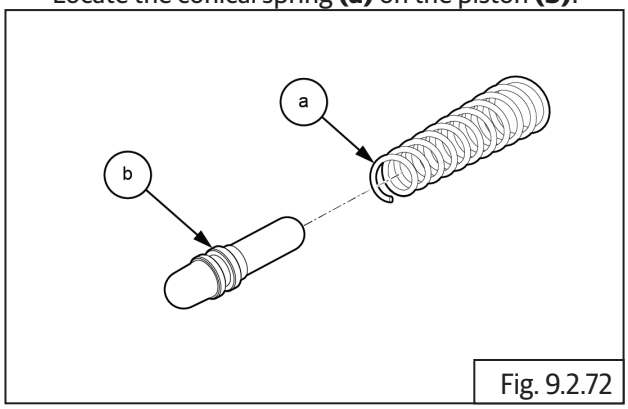

Fig. 9.2.72

- Smear piston seals and cylinder bore with fresh brake fluid and assemble piston **(a)** subassembly into master cylinder **(b)** by gently pushing it into the bore.

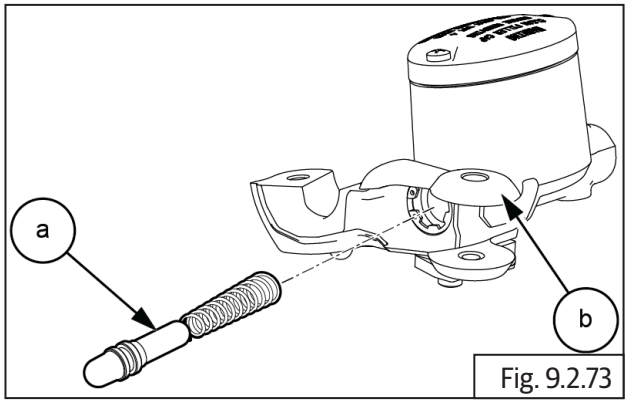

Fig. 9.2.73

- Compress and assemble circlip **(a)** into groove of master cylinder **(b)**.

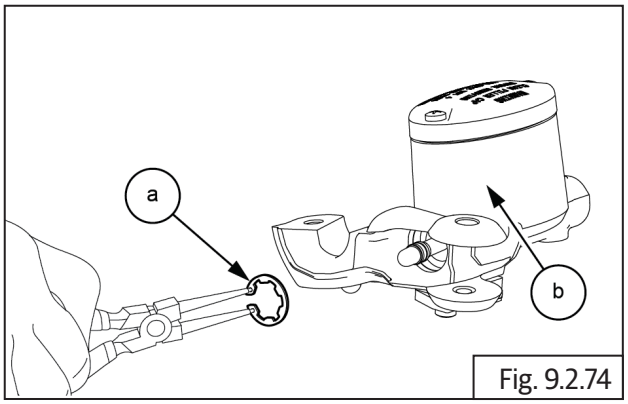

Fig. 9.2.74

⚠ CAUTION

DO NOT use tools with sharp ends.

Ensure circlip is locked properly after assemble.

- Assemble the rubber Boot.

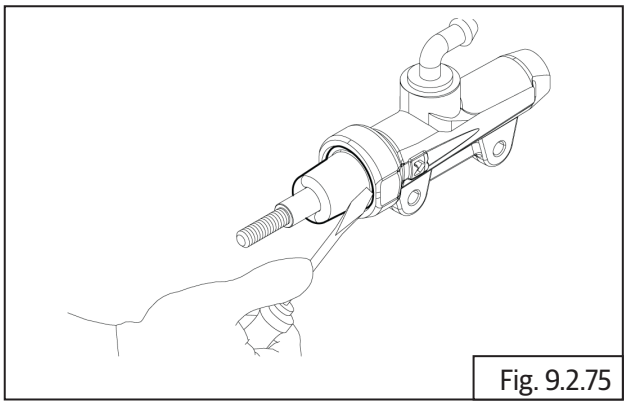
Fig. 9.2.75

- Apply silicon grease on the lever pivot hole and on the Piston surface.
- Position brake lever inside the bracket, locate pivot screw **(a)** from the top and tighten to bracket.
- Assemble lock nut **(b)** below and tighten.

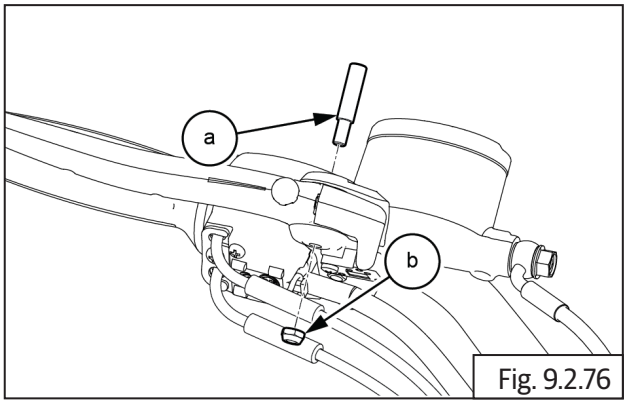

Fig. 9.2.76

- Assemble the Brake Switch **(a)** on the bracket.

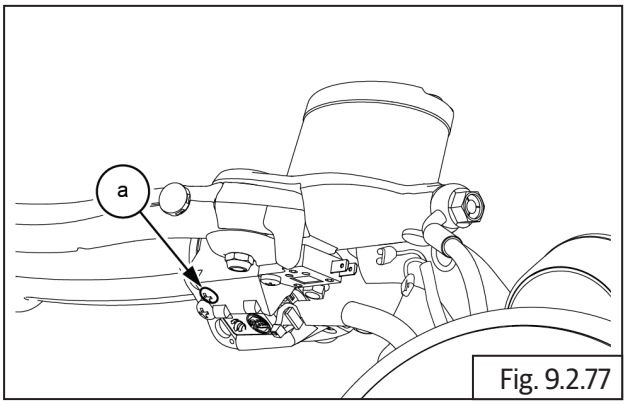

Fig. 9.2.77

- Locate master cylinder assembly on handlebar RH and locate clamp over cylinder.
- Locate and tighten 2 Nos. Hex flange head bolt **(M5) (a)** into clamp and fix the master cylinder assembly.

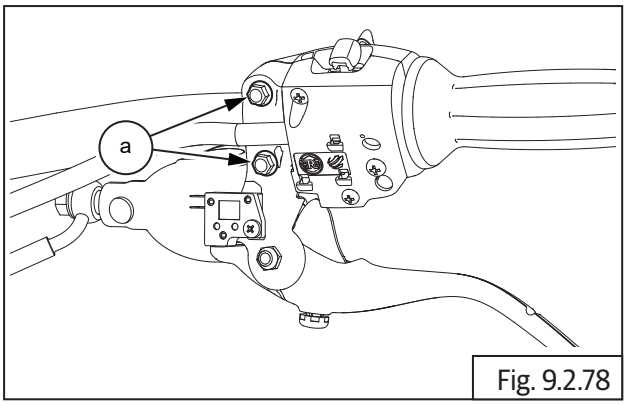

Fig. 9.2.78

	8 mm Socket with Ratchet

- Refill fluid, inspect and diagnose if there are any leakages.

9.3 Anti-lock Braking System (ABS)

Working Principle

The Royal Enfield super meteor 650 motorcycles are equipped with the state of the art Anti-Lock Braking System (ABS).

The ABS is a safety system which constantly receives inputs about the speed of rotation of the front and rear wheels on a real time basis and modulates the braking force for each wheel when brakes are applied by the rider. This helps prevent the brakes from locking the wheels, especially when brakes are applied suddenly, the wheels have a better traction with the road surface.

The benefits of ABS:

- Increased braking efficiency and riding confidence when braking.
- Prevent wheel lock up when brakes are applied suddenly with great force thereby ensuring good traction of the front and rear wheels with the road surface.

Typical Motorcycle Braking Distance

(Average driver starting speed 100 Kmph)

The ABS consists of an Electronic Control Unit (ECU), modulator, toner rings and wheel speed sensors.

The ECU constantly receives inputs on the speed of rotation of the front and rear wheels through the wheel speed sensors. When the rider applies either the front or rear brakes or both brakes, the speed sensors provide data on the rate of deceleration of the wheels to the ECU which then commands the valves in the modulator to progressively regulate the hydraulic fluid pressure on a real time basis so that the brake pads do not “lock” on the brake disc which can potentially cause the wheels to lock.

Whenever front and/or rear brakes are applied with great force/suddenly, the braking management system gets input of the wheels speed through a wheel speed sensor and commands the modulator in the braking system to modulate the hydraulic fluid force such that the brake pads do not lock on the brake disc which effectively from locking and provide better traction to prevent the motor cycle from shifting and/or loss of control.

In the ABS, during application of brakes, a pulsating sensation will be felt on the brake lever/pedal indicating that the ABS is working correctly.

⚠ WARNING

The ABS will by no means prevent an accident and/or loss of control. It is the responsibility of the rider to anticipate and judge the braking distances required, depending on the speed at which the motorcycle is traveling and apply brakes sufficiently in advance to prevent an accident and/or loss of control.

While ABS assists in improved motorcycle control during braking, decreased stopping distances on dry and good road conditions, it cannot be assumed that it will be effective in wet, rainy, snow covered, off road conditions, loose gravel surfaces or hilly roads etc, as the traction of the wheel itself will be very minimal in these conditions.

As far as possible, whenever applying sudden brakes in emergency in wet conditions, please ensure the motorcycle is upright in steady riding position and the handlebars are straight. Avoid hard braking when banking heavily at great speeds.

Whenever brakes are applied, a pulsating sensation will be felt on the brake lever/pedal. This is characteristic to the ABS and quite normal, as the modulator in the ABS constantly modulates the hydraulic pressure in the braking system in relation to the force applied on the brake lever/pedal and the speed of the motorcycle.

Whenever bleeding the hydraulic system, it is highly recommended to bleed both the front and rear brakes for proper functioning of the ABS. Do not restrict to bleeding any one brake system as it may render the ABS non-functional, in case the other brake has air bubbles in its system.

Functions and Specifications of the ABS Aggregates

As soon as the ignition and engine stop switch are switched ON, the ABS sign will light up. The lamp will remain ON till the motorcycle attains a speed of 5 Kmph (3MPH) and then switches OFF. This indicates that the ABS is working properly.

In the event the lamp does not switch OFF and remains continuously ON at higher speeds, it is recommended not to drive the motorcycle and get the brake system inspected and corrected through a nearest authorized Royal Enfield Dealer / Distributor.

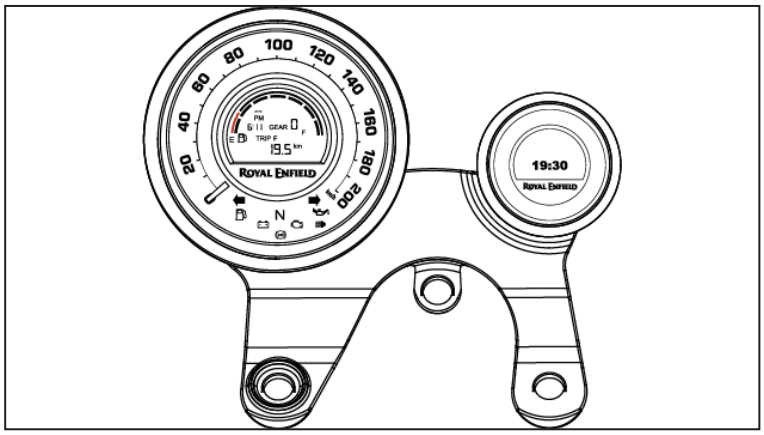

1. Electronic Control Unit (ECU)

The ECU is located in the bracket alongside of the modulator, on the frame, behind the battery box.

It consists of a microprocessor, which receives inputs from the wheel speed sensors, interprets the data, determines the safe hydraulic pressure in relation to the speed of the wheels and commands the valves in the modulator to progressively regulate the hydraulic fluid pressure on a real time basis for efficient and safe braking.

Specifications:	Vitesco (Continental) M4C
Operating Voltage:	9 V to 16 V
Operating Temperature:	-40ºC to 70ºC

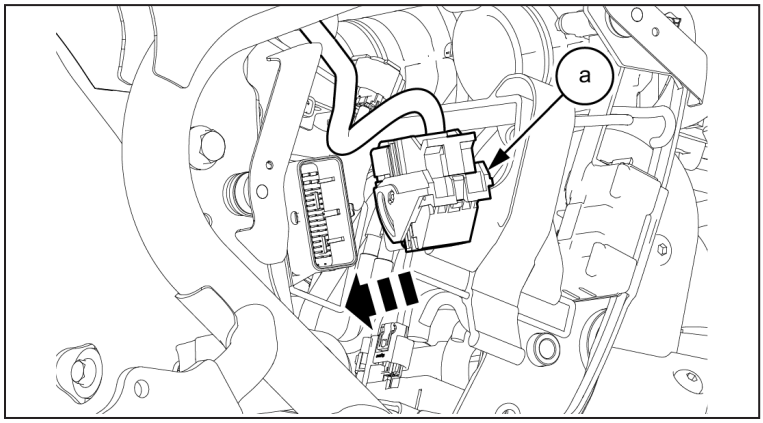

The ECU also records and stores data on the performance of the ABS on a real-time basis. This will help in diagnosing any braking related disorders, whenever the Royal Enfield NACS II diagnostic tool is connected to the socket in the wiring harness of the motorcycle.

The history stored in the ECU can also be saved to an external computer for future reference and also erased from the ECU, using the Royal Enfield NACS II diagnostic tool.

2. Modulator

The modulator is located on the near air filter assembly. The brake hoses from the master cylinders and brake calipers are connected to the modulator.

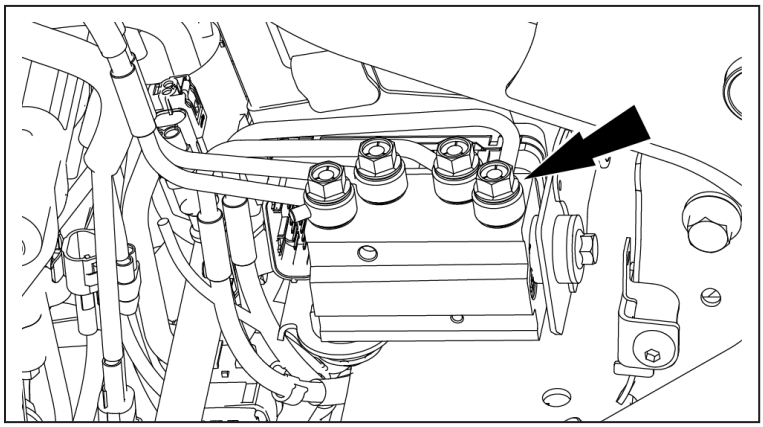

Whenever brakes are applied, the valves inside the modulator are progressively activated by the ECU to regulate the hydraulic fluid pressure in the brake system. This in turn will modulate the movement of the pistons inside the brake calipers to prevent the brake pads from locking on the brake discs.

3. Wheel Speed Sensors, Front and Rear

There are 2 wheel speed sensors **(a)** provided in the motorcycle. The front speed sensor is assembled on the fork end LH and the rear speed sensor is assembled on the rear wheel caliper bracket.

Specifications:

Operating Voltage: 08 V to 16 V

Operating Temperature: -40º C to 70º C

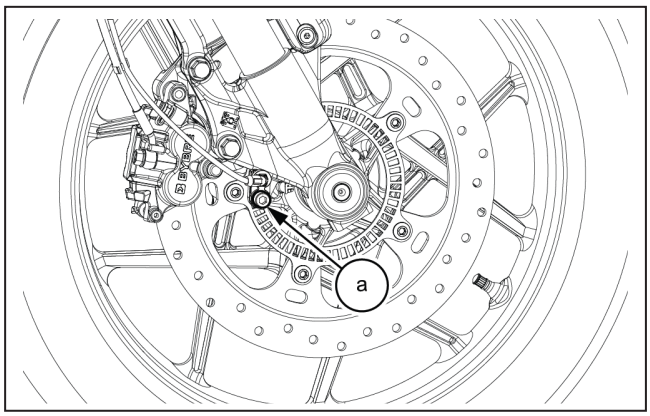

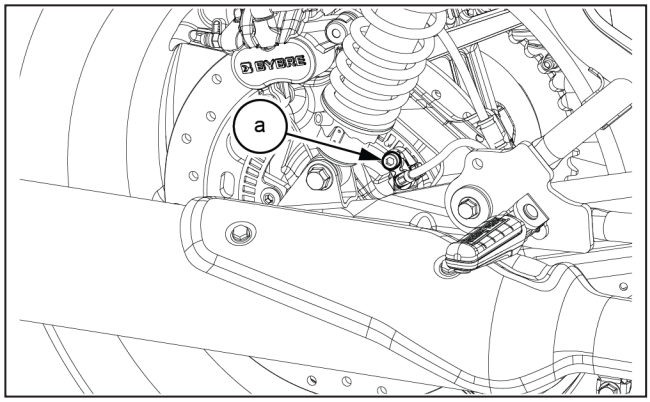

These sensors provide the inputs to the ECU about the speed of rotation of the wheels.

4. Toner Rings, Front and Rear

The toner rings **(a)** are assembled on the front and rear brake hubs inside the brake discs.

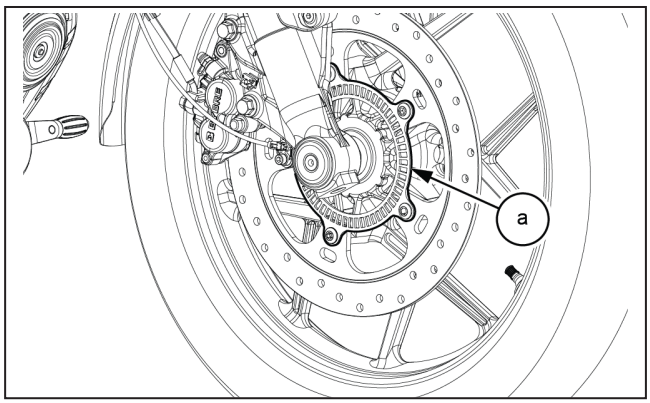

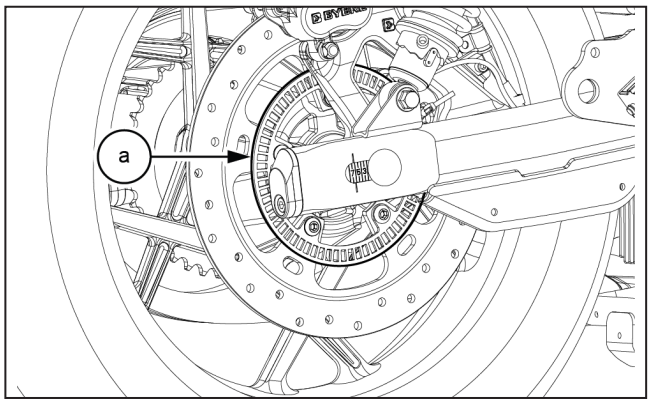

The toner rings assists the wheel speed sensors to assess the speed of rotation of the wheels.

5. Master Cylinders, Front and Rear

The front brake master cylinder is assembled on the handlebar RH and activated by the front brake lever.

The rear brake master cylinder is assembled on the frame RH side and activated by the brake pedal

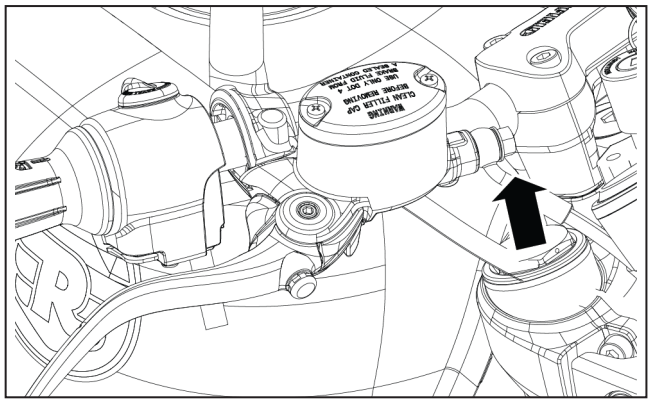

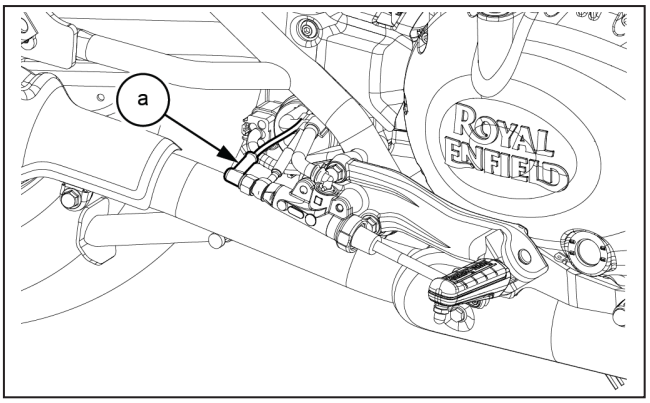

Whenever the front brake lever/rear brake pedal are activated, the piston inside the master cylinder applies force on the brake fluid to activate the brakes.

The master cylinders are connected to the modulator through brake hoses to transmit the applied hydraulic fluid pressure from the master cylinders.

6. Wheel Calipers - Front and Rear

The front wheel caliper is assembled on the fork end RH and the rear wheel caliper is located on the rear swing arm RH. The wheel calipers consist of pistons and brake pads.

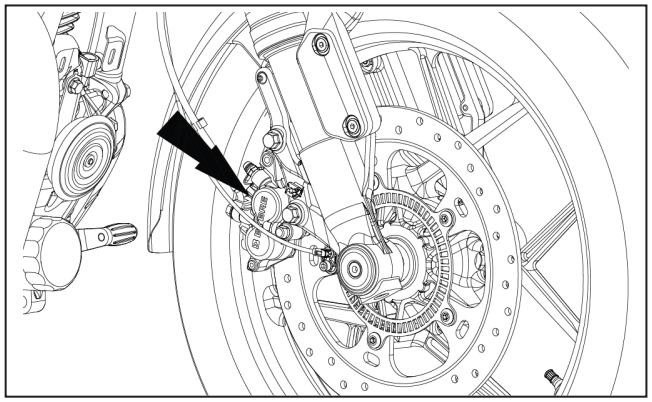

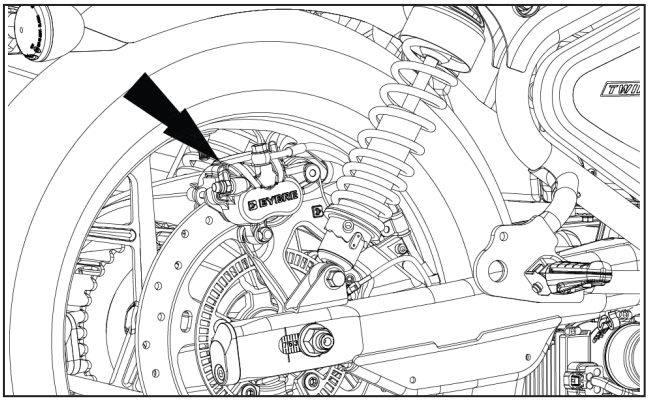

When brakes are applied, the hydraulic fluid force in the braking system causes the pistons to move, and pushes the brake pads against the brake discs on the wheels for braking.

The wheel calipers are connected to the modulator which modulate the hydraulic fluid force to be applied against the pistons.

Do's and Don'ts for ABS

- **Use only approved Brake fluid recommended by Royal Enfield. (DOT4)**
- **Whenever the modulator is removed from the motorcycle, please ensure it is stored upright with the ports facing upwards.**
- **Whenever the modulator is removed from the motorcycle for any reason, please ensure the front and rear brake system bleeding is carefully done and no air is trapped in the brake system.**
- **DO NOT interchange ABS unit/ECU from one motorcycle to another.**
- **DO NOT interchange the brake hose connections between master cylinders and wheel cylinders and also front and rear circuit, at the modulator end.**
- **The shelf life of a wet modulator unit is 5 years from the date of manufacture.**

Dismantling

9.3.1. Modulator

⚠ CAUTION

Before dismantling the modulator, ensure ignition switch and engine stop switch are in OFF position.

Ensure the hydraulic brake fluid from the front and rear brakes is drained completely.

- Remove the Side panel RH.
- Remove the Rider seat.
- Remove the Fuel tank assembly.

⚠ CAUTION

Ensure the following:

Fuel is drained completely from fuel tank.

Fuel feed and return hoses are disconnected from the fuel rail.

Wiring couplers to fuel pump and low fuel sensors are disconnected.

EVAP hose pipes are disconnected.

⚠ WARNING

Gasoline is extremely flammable and highly explosive. Improper handling can lead to fatal accident or serious injury.

- Bleed out the brake fluid from the front brake system.

⚠ CAUTION

Do not spill brake fluid on any part of the motorcycle as it will damage the painted/ plastic surfaces.

⚠ WARNING

Ensure brake fluid does not get in contact with eyes and skin. In-case of exposure wash affected area thoroughly with water. Seek medical attention immediately if any irritation persists.

Keep out of reach of children.

Dispose drained brake fluid carefully and responsibly.

- Loosen and remove banjo bolt **(a)** and disconnect hose **(b)** from front caliper on front fork RH.

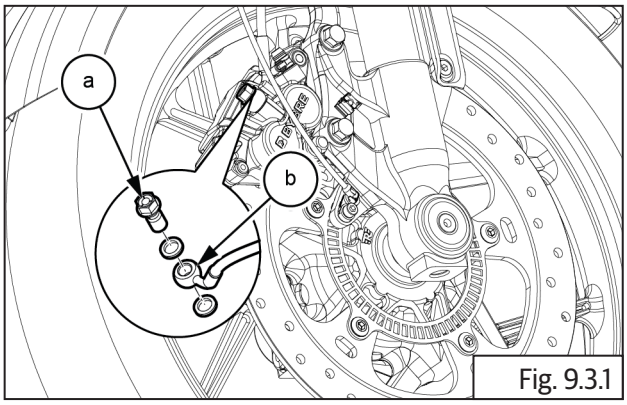

Fig. 9.3.1

	12 mm Ring spanner

- Loosen and remove banjo bolt **(a)** and disconnect hose **(b)** from front master cylinder on handlebar RH.

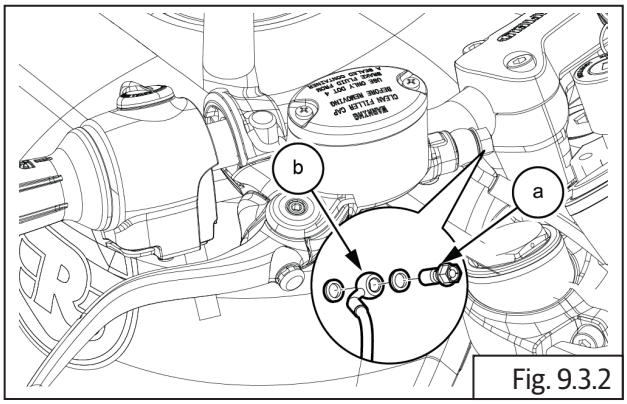

Fig. 9.3.2

	12 mm Ring spanner

- Loosen and remove banjo bolt **(a)** and disconnect hose **(b)** from rear caliper from rear wheel RH.

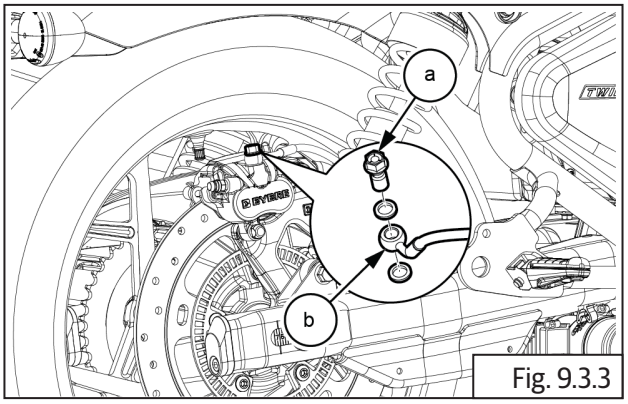

Fig. 9.3.3

	12 mm Ring spanner

- Loosen and remove banjo bolt **(a)** and disconnect hose from rear master cylinder assembly.

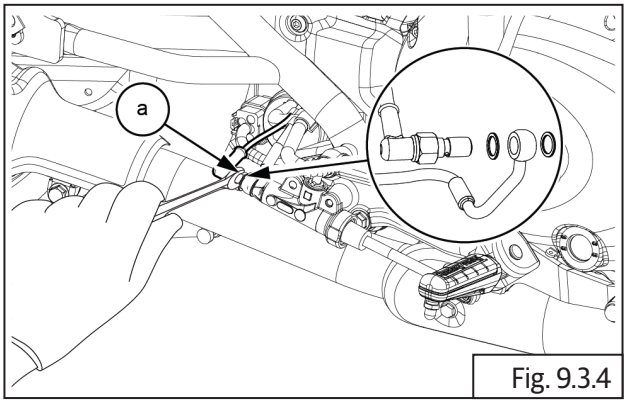

Fig. 9.3.4

	12 mm Ring spanner

- Remove brake hose mounting clamps front **(a)** from frame.

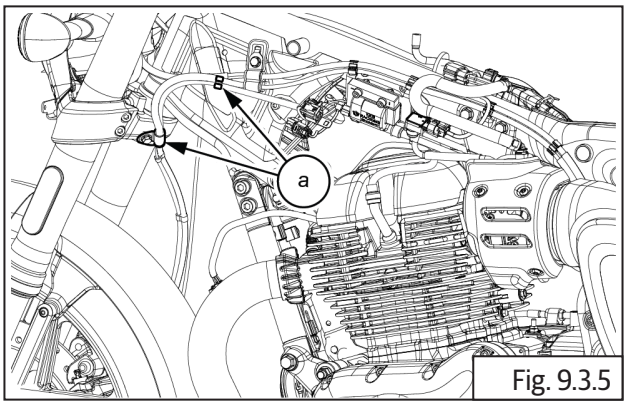

Fig. 9.3.5

- Remove brake hose mounting clamp rear **(a)** from air filter box RH.

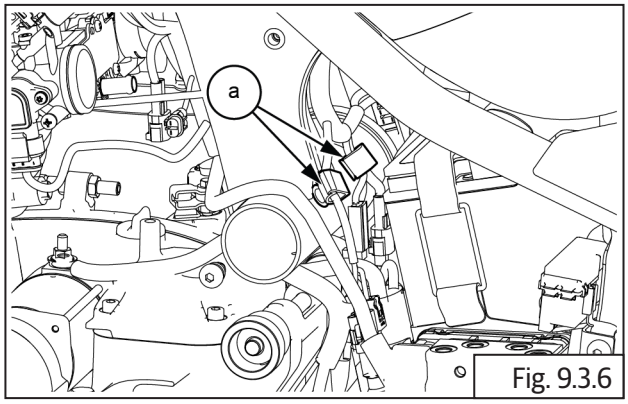

Fig. 9.3.6

- Disconnect holding straps **(a)** of the brake hoses from swing arm.

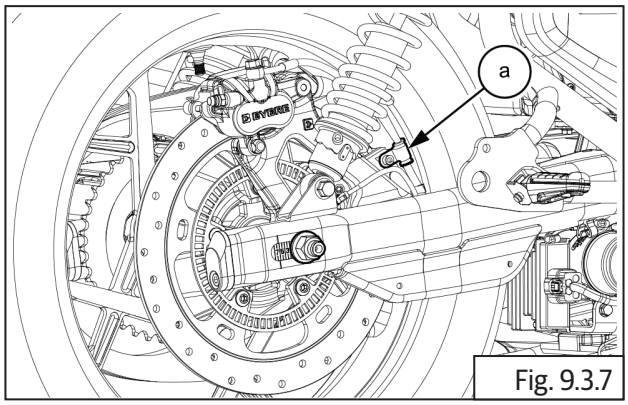

Fig. 9.3.7

- Disconnect ABS modulator electrical connector **(a)** from ECU.

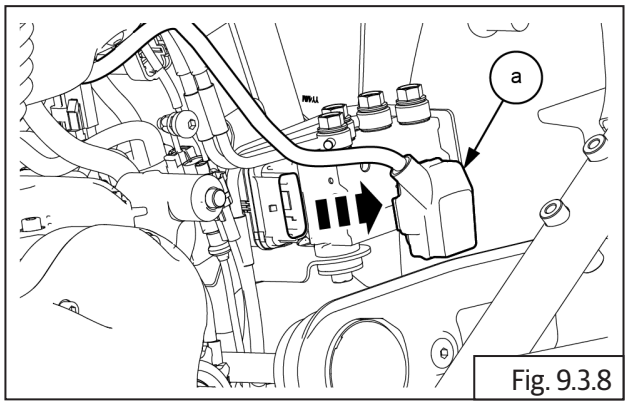

Fig. 9.3.8

- Remove strap holding main harness to ABS housing bracket and move harness away from the bracket.
- Disconnect front wheel speed sensor wiring connector **(a)** from harness.

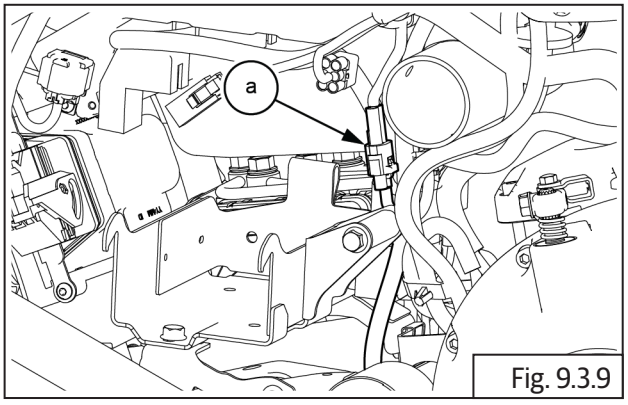

Fig. 9.3.9

- Loosen and remove 2 Nos. Hex head bolds **(M6) (a)** holding ABS modulator mounting bracket from frame.
- Ensure all 4 Nos. brake hoses are free to be removed along with modulator from frame.

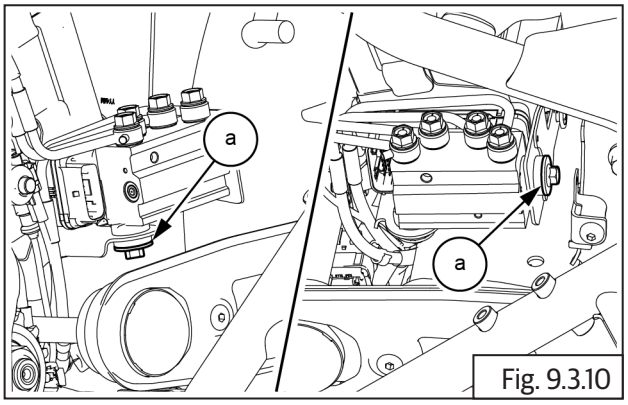

Fig. 9.3.10

	10 mm socket with Ratchet

- Loosen and remove hex bolt **(M6) (a)** at the LH side of bracket **(b)**.

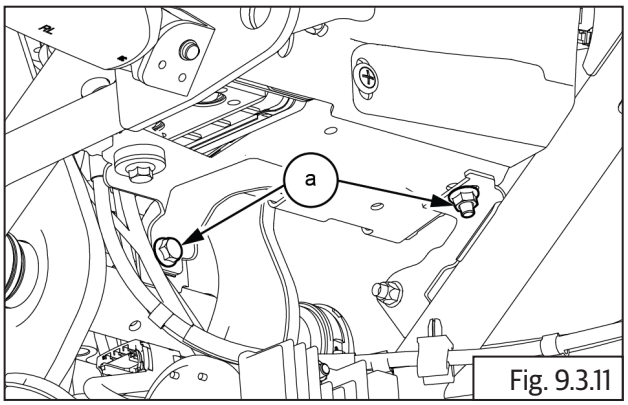

Fig. 9.3.11

	10 mm Socket with Ratchet

- Separate the ABS modulator **(a)** from bracket and remove along with the 4 Nos. brake hoses.

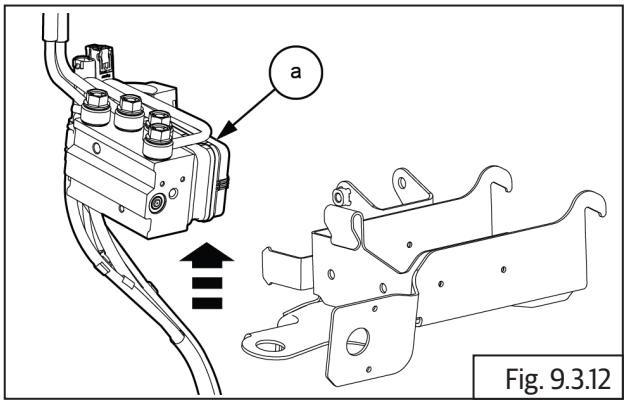

Fig. 9.3.12

- Brake hose color tags:
  - a) BLUE - Front Master Cylinder Assembly
  - b) GREEN - Front Brake Caliper
  - c) RED - Rear Brake Caliper
  - d) YELLOW - Rear Master Cylinder Assembly

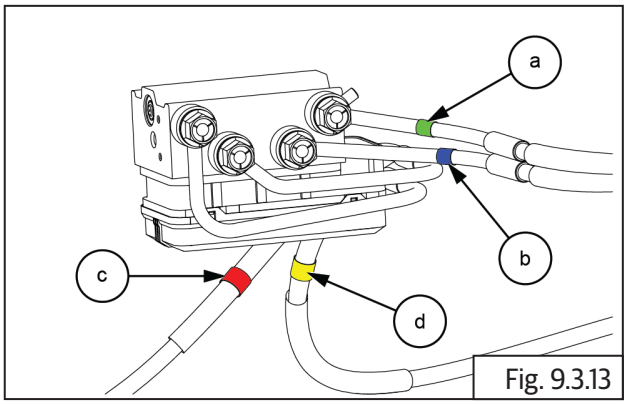

Fig. 9.3.13

- Reference mark to be created during dismantling for ease of assembly.

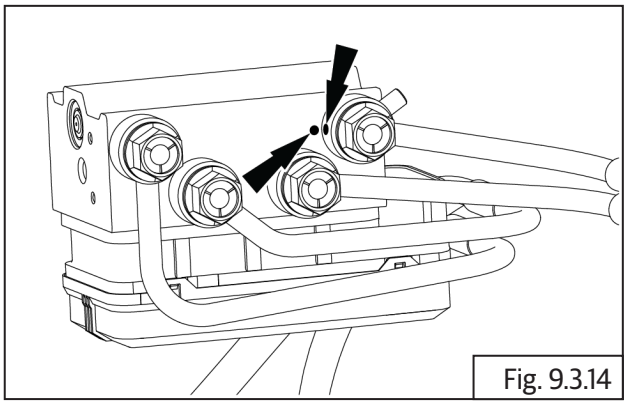
Fig. 9.3.14

- Repeat the above process to other brake hoses.
- Support modulator suitably on a work table, loosen and remove 4 Nos. banjo bolts **(a)** along with washers from modulator to remove brake hoses **(b)**.
- Remove 4 Nos. brake hoses from modulator.

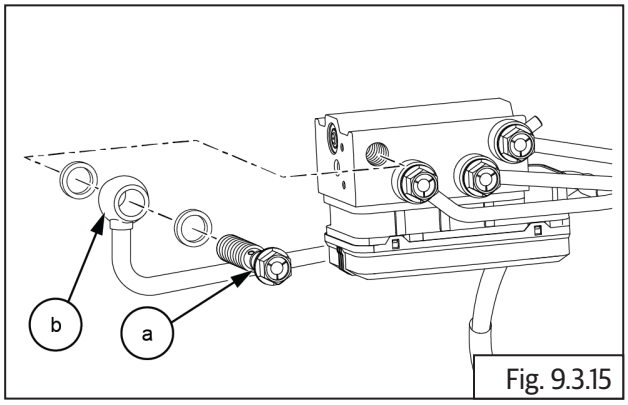

Fig. 9.3.15

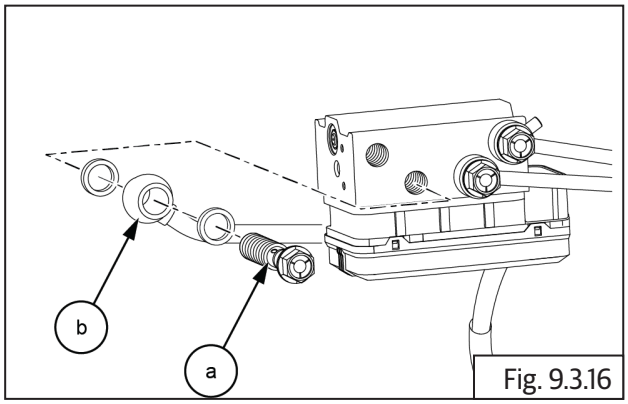

Fig. 9.3.16

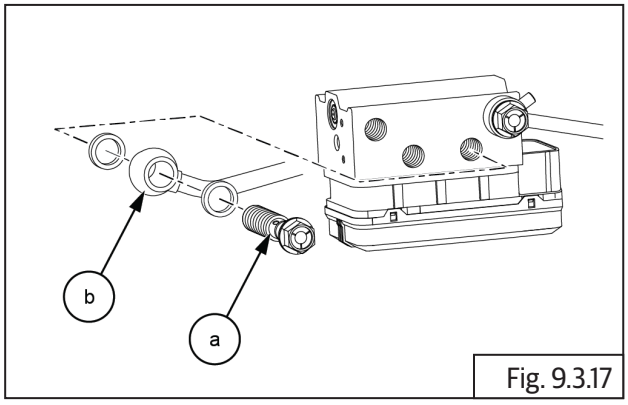

Fig. 9.3.17

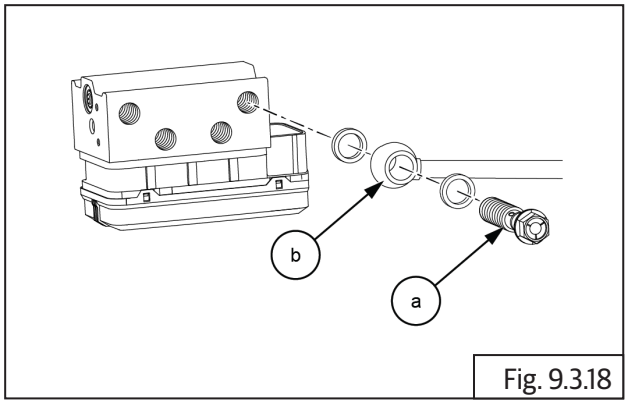

Fig. 9.3.18

Do's & Don'ts

- **DO NOT interchange ABS unit/ECU from one motorcycle to another.**
- **Whenever the modulator is removed from the motorcycle, please ensure it is stored upright with the ports facing upwards.**
- **Store the ECU in a cool and dry place.**
- **Store the ECU away from any magnetic forces as it will affect the ECU program software and damage the ECU.**
- **DO NOT allow moisture to affect ECU.**.

9.3.2. Wheel Speed Sensor - Front

- Ensure Ignition switch and Engine stop switch are in OFF position.
- Release sensor coupler wire from the brake hose clip **(a)** on fork end LH and from the bracket on the frame.

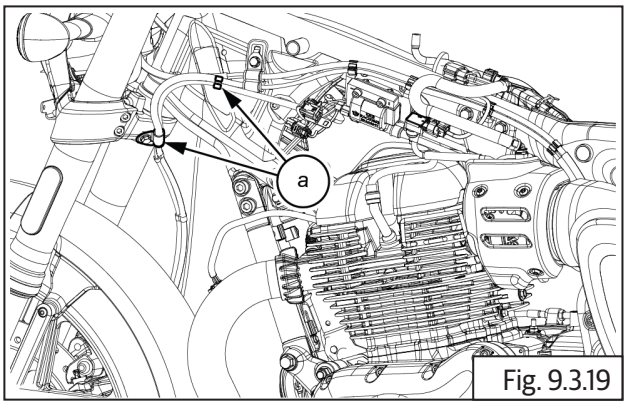

Fig. 9.3.19

- Disconnect sensor coupler **(a)** from harness near ABS modulator bracket.

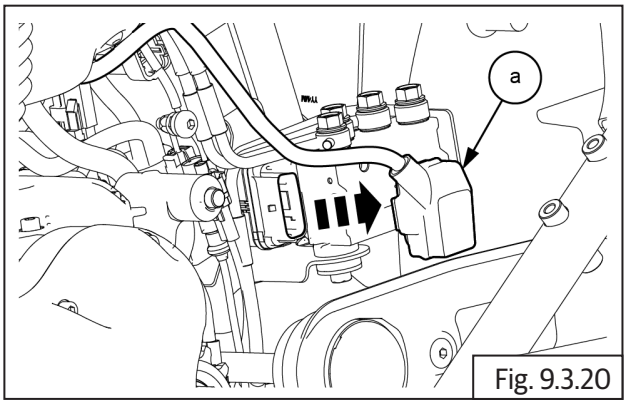

Fig. 9.3.20

- Remove sensor coupler wire from clip **(a)** on fork end LH.

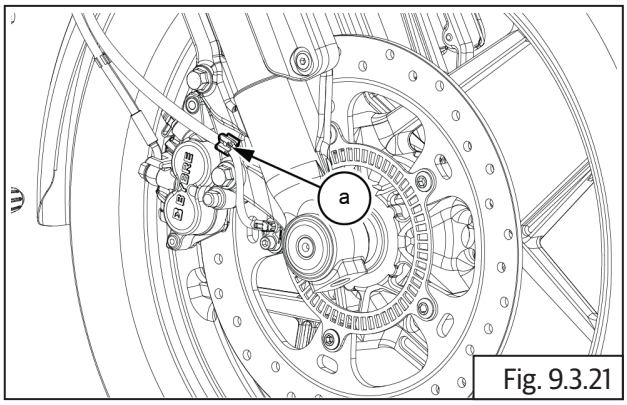

Fig. 9.3.21

- Loosen and remove hex socket head bolt **(M6) (a)** holding sensor **(b)** to fork end LH.
- Gently pull out sensor from fork end LH.

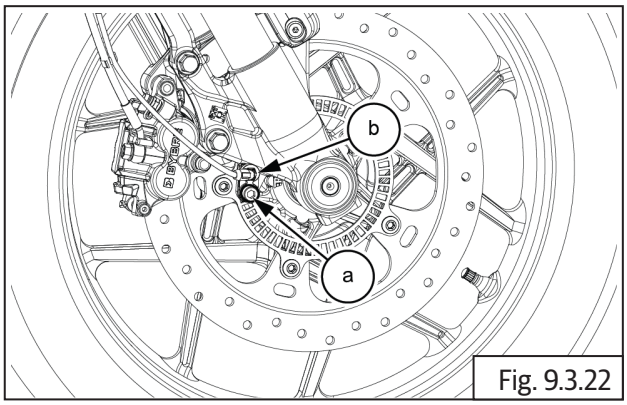

Fig. 9.3.22

	5 mm Allen socket with Ratchet

9.3.3. Wheel Speed Sensor - Rear

- Ensure Ignition switch and Engine stop switch are in OFF position.
- Remove the Side panel RH.
- Remove the Rider seat.
- Remove the Disconnect battery terminals and remove battery from battery carrier.

- Disconnect sensor coupler **(a)** from harness near rollover sensor.

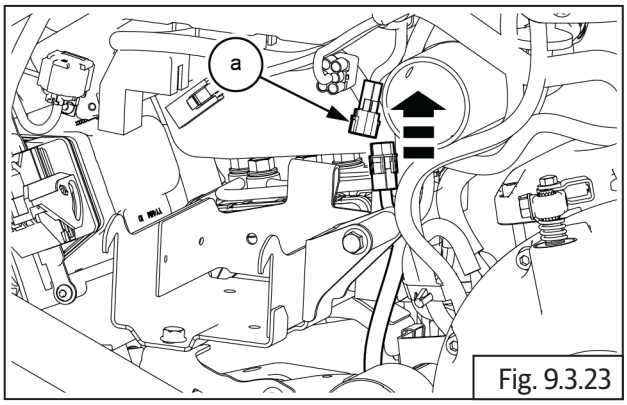

Fig. 9.3.23

- Release sensor coupler wire from the routing in mudguard and brake hose clip **(a)** on swing arm RH.

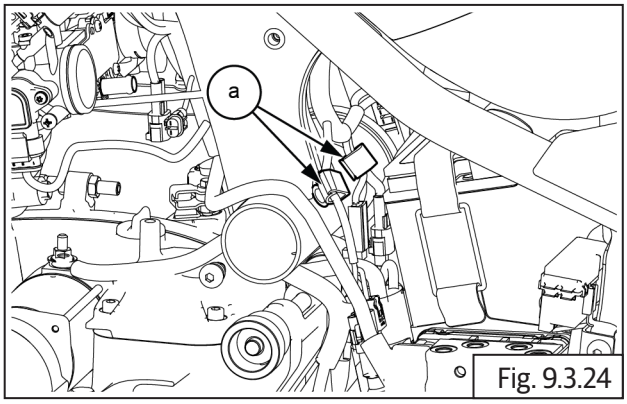

Fig. 9.3.24

- Loosen and remove hex flange head bolt **(M6) (a)** holding sensor **(b)** to rear wheel caliper bracket top.

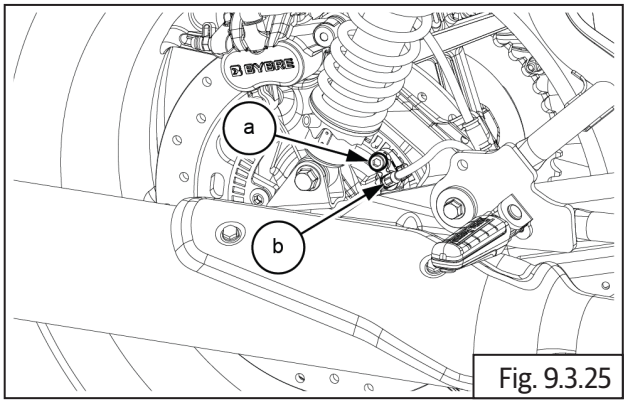

Fig. 9.3.25

	5 mm Allen socket with Ratchet

- Loosen and remove rear shock absorber RH, bottom mounting hex socket head bolt **(a)** and release shock absorber from swing arm.

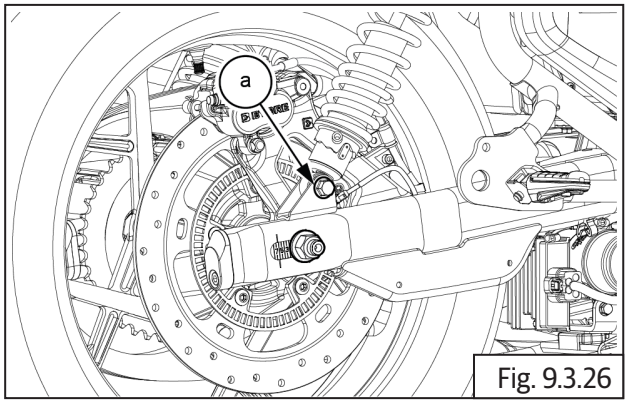

Fig. 9.3.26

- Gently pull out sensor **(b)** with sim **(a)** from rear wheel caliper bracket top.

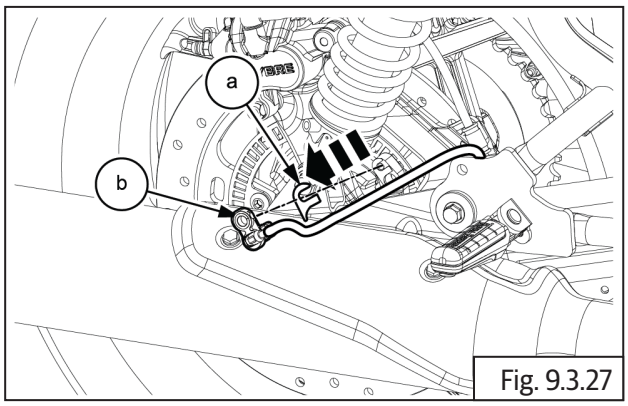

Fig. 9.3.27

9.3.4. Toner Ring - Front

- Loosen and remove 5 Nos. Hex socket head bolts **(M8) (a)** from wheel LH in criss cross pattern holding toner ring and brake disc to hub.

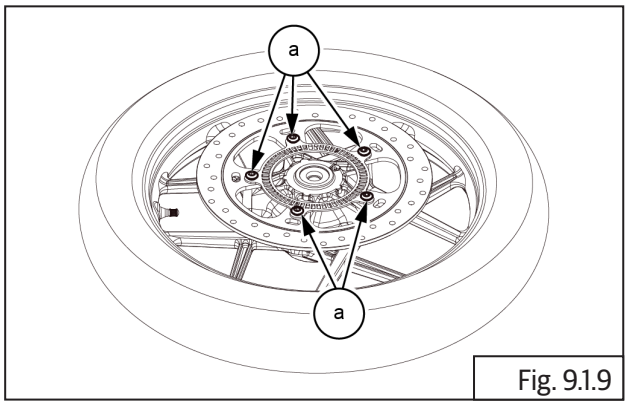

Fig. 9.1.9

	6 mm Allen socket with Ratchet

⚠ WARNING

DO NOT place/store the wheel with disc facing downward. It will cause bends and damages and change warpage.

- Remove toner wheel **(a)** and keep it aside safely.

⚠ CAUTION

Avoid any bends or damages to the toner wheel as it will have serious effects on ABS performance.

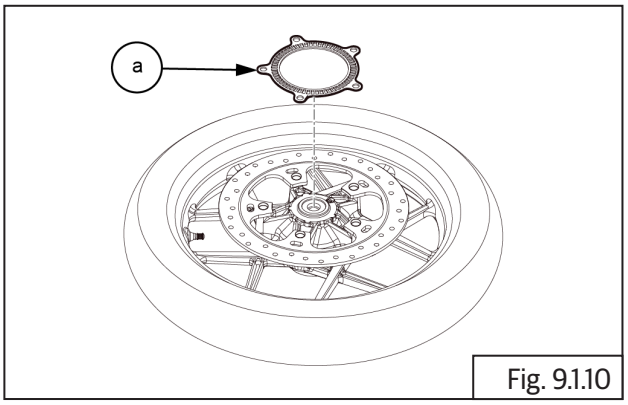

Fig. 9.1.10

9.3.5. Toner Ring -Rear

- Loosen and remove 6 Nos. Hex head button socket screws **(M6) (a)** from rear wheel disc hub RH.

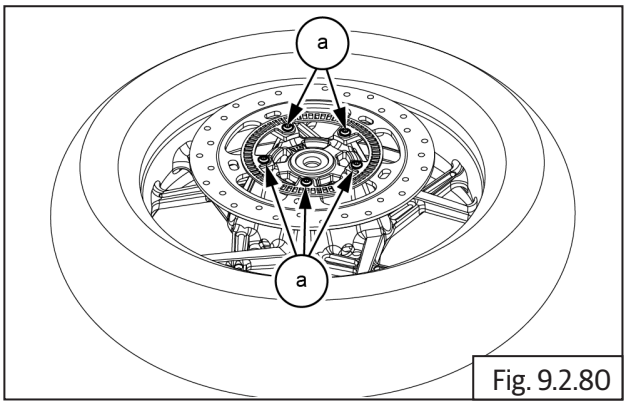

Fig. 9.2.80

	5 mm Allen socket with Ratchet

- Remove ABS toner wheel **(a)** from rear wheel hub RH.

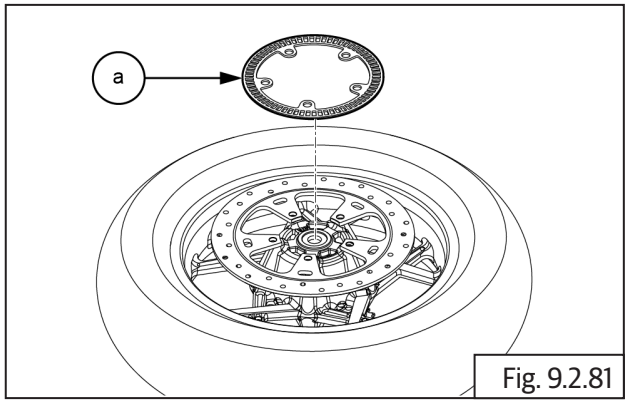

Fig. 9.2.81

- Remove rear disc plate **(a)** from rear wheel hub RH and keep aside safely.

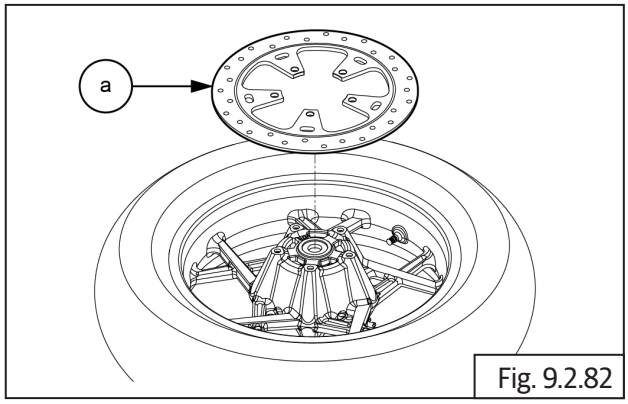

Fig. 9.2.82

Assembly

9.3.6. Toner Ring – Front

- Locate front brake disc **(a)** on front wheel hub and disc facing outward. Ensure mounting holes are correctly aligned.

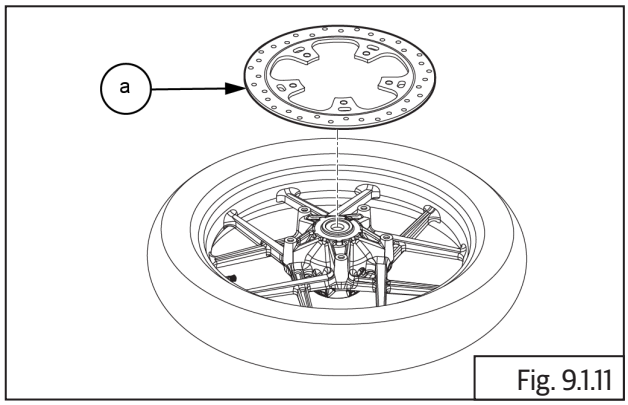

Fig. 9.1.11

- Position toner wheel **(a)** onto front disc and ensure mounting holes are correctly aligned.
- If bolts are pre-coated bolts replace with new ones.
- If they are non-coated, clean threads and wait for few minutes and apply thread sealant.

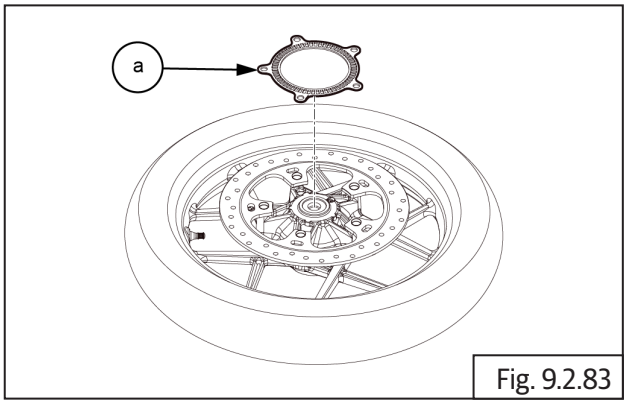

Fig. 9.2.83

- Insert 5 Nos. Hex socket head bolts **(M8) (a)** into brake disc LH and tighten in criss cross pattern to specified torque.

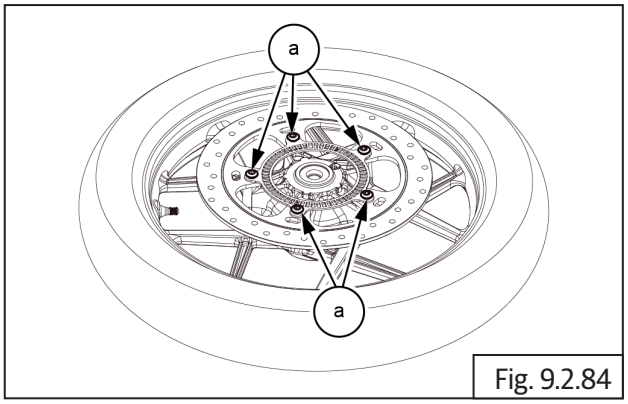

Fig. 9.2.84

	6 mm Allen socket with Ratchet
Torque	25 N-m/2.5 kgf-m

9.3.7. Toner Ring -Rear

- Assemble rear disc plate **(a)** into rear wheel hub RH .

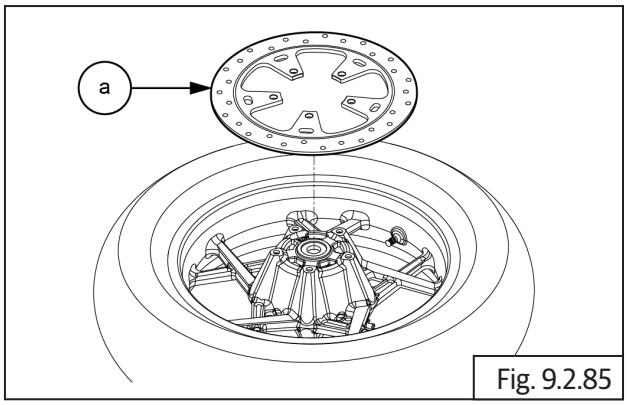

Fig. 9.2.85

- Assemble ABS toner **(a)** into rear wheel hub RH.

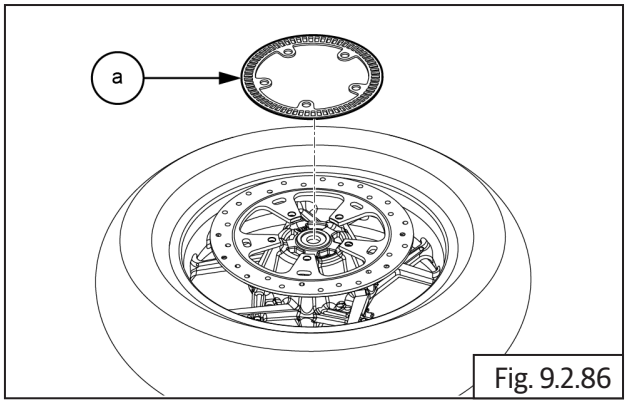

Fig. 9.2.86

- Insert and tighten 6 Nos. Hex head button screws **(M6) (a)** into rear wheel disc hub RH.

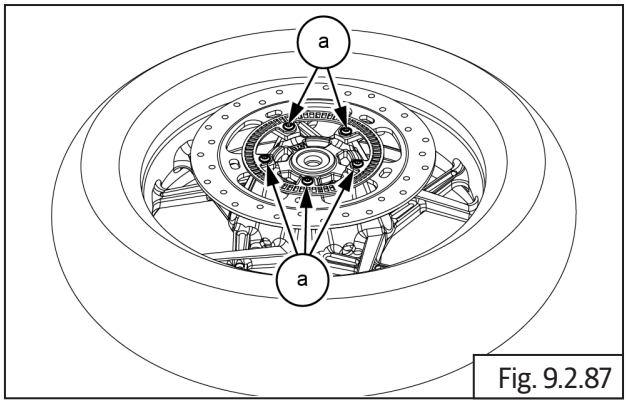

Fig. 9.2.87

	5 mm Allen socket with Ratchet
Torque	10 N-m/1.0 kgf-m

9.3.8. Wheel Speed Sensor - Rear

- Gently locate sensor **(b)** with sim **(a)** into rear wheel caliper bracket top.

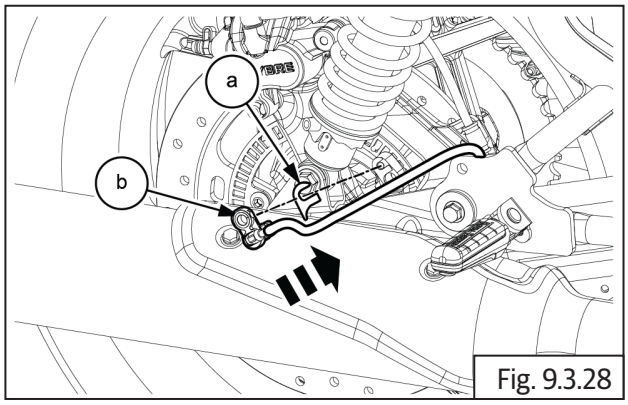

Fig. 9.3.28

- Locate and tighten rear shock absorber RH, bottom mounting hex socket head bolt **(a)** and assemble shock absorber into swing arm.

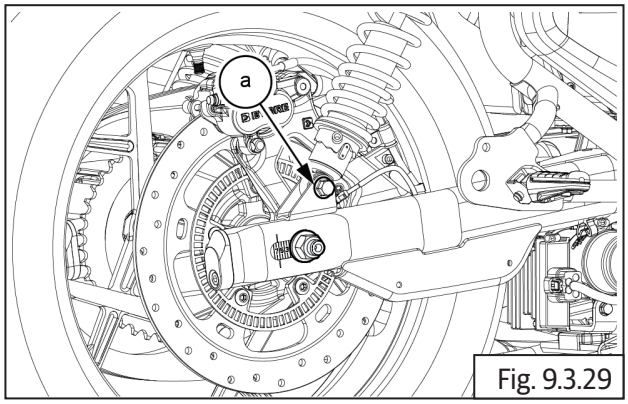

Fig. 9.3.29

- Locate and tighten hex flange head bolt **(M6) (a)** holding sensor **(b)** to rear wheel caliper bracket top.

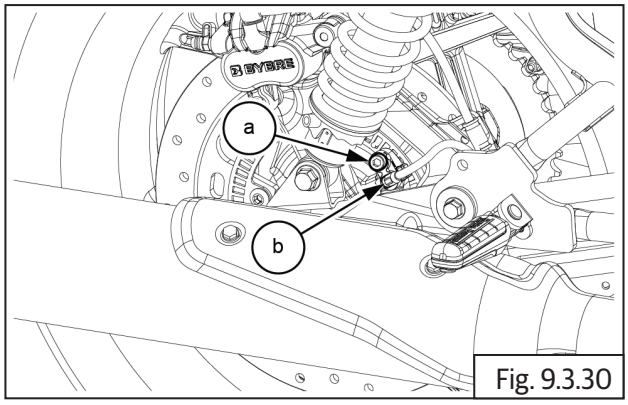

Fig. 9.3.30

	5 mm Allen socket with Ratchet
Torque	10 N-m / 1.0 kgf-m

- Locate sensor coupler wire into the routing in mudguard **(a)** and brake hose clip on swing arm RH.

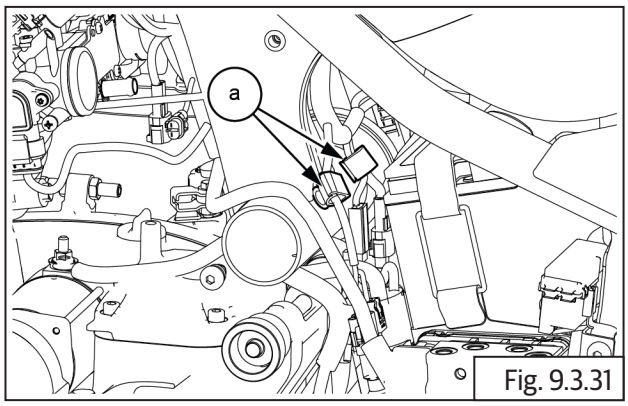

Fig. 9.3.31

- Connect sensor coupler **(a)** into harness near rollover sensor.

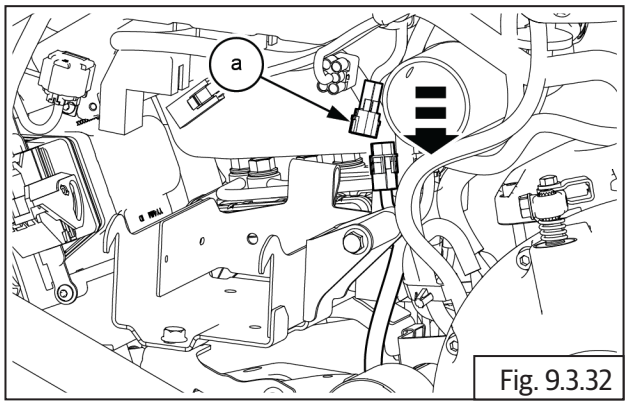

Fig. 9.3.32

- Locate battery into battery tray and connect battery terminals.
- Assemble the Side panel RH.
- Assemble the Rider seat.

9.3.9. Wheel Speed Sensor - Front

- Gently locate sensor onto fork end RH.
- Locate and tighten hex flange bolt **(M6) (a)** holding sensor **(b)** to fork end LH.

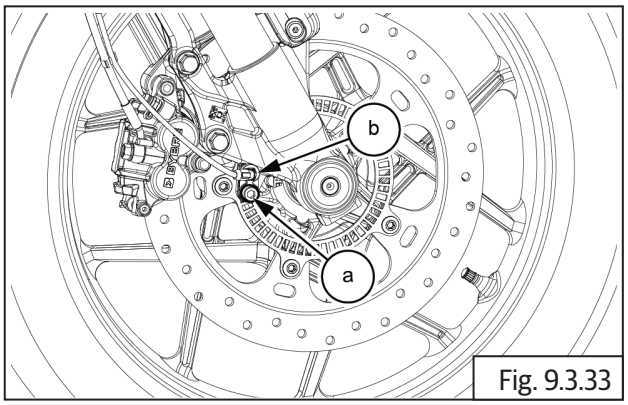

Fig. 9.3.33

	5 mm Allen socket with Ratchet
Torque	10 N-m / 1.0 kgf-m

- Locate sensor coupler wire into clip **(a)** on fork end RH.

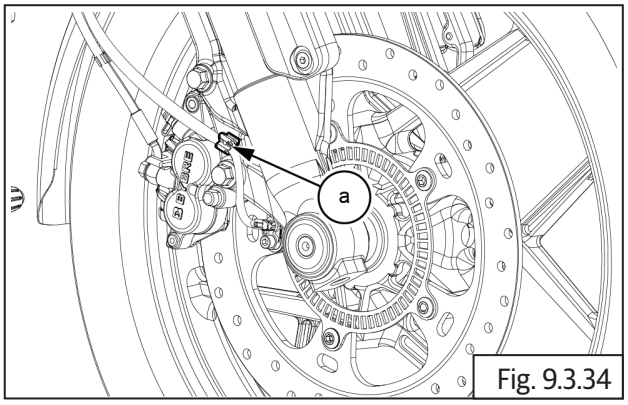

Fig. 9.3.34

- Locate sensor coupler wire mounting clamps front **(a)** into frame.

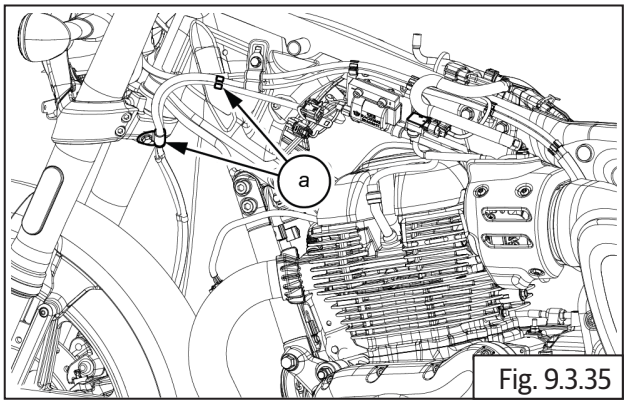

Fig. 9.3.35

- Connect sensor coupler **(a)** into harness near ABS modulator bracket.

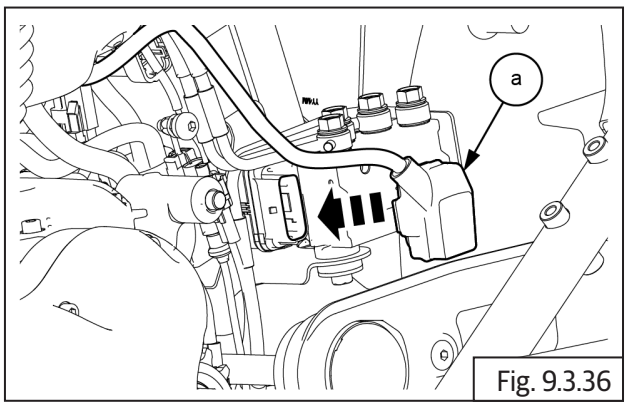

Fig. 9.3.36

⚠ WARNING

DO NOT interchange ABS unit/ECU from one motorcycle to another.

9.3.10. Modulator

- Brake hose color tags:
  - a) GREEN - Front Brake Caliper
  - b) BLUE - Front Master Cylinder Assembly
  - c) RED - Rear Brake Caliper
  - d) YELLOW - Rear Master Cylinder Assembly
- Ensure the sequence of the hoses is as per the color tags shown below.

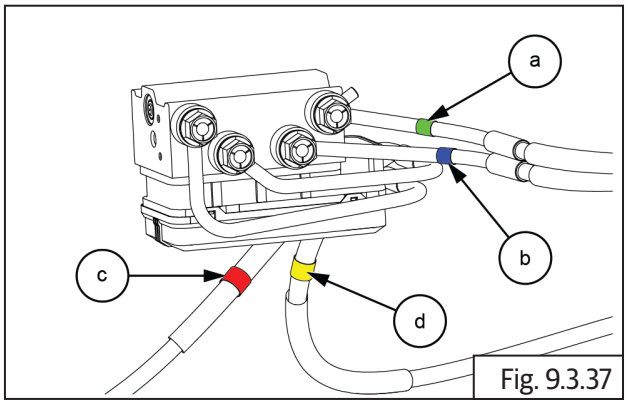

Fig. 9.3.37

- Locate 4 Nos. brake hoses into modulator.
- Support modulator suitably on a work table, keeping the color tags in mind, locate and tighten 4 Nos. banjo bolts **(a)** along with washers into modulator to fix brake hoses **(b).**
- Ensure the reference marks to align properly.

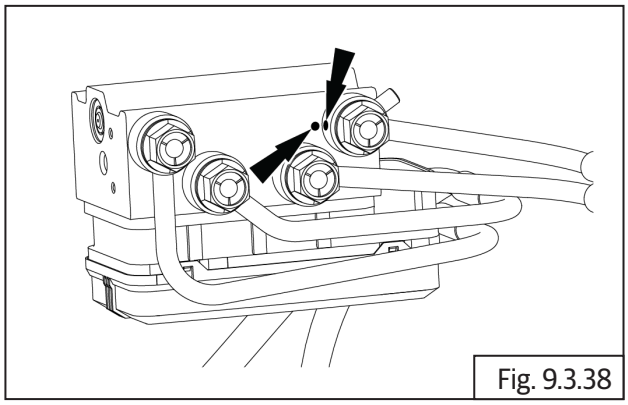
Fig. 9.3.38

- Repeat the above process to other brake hoses.
- RED - Modulator to rear brake caliper hose.

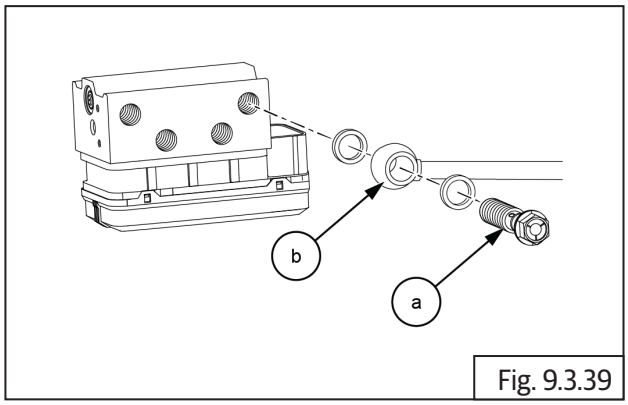

Fig. 9.3.39

- YELLOW - Modulator to rear master cylinder assembly hose.

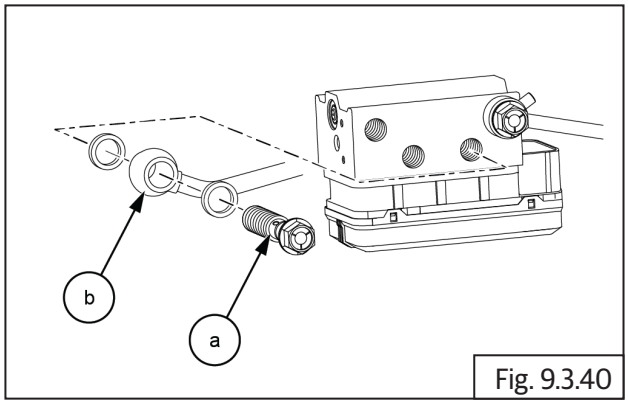

Fig. 9.3.40

- GREEN - Modulator to front brake caliper hose.

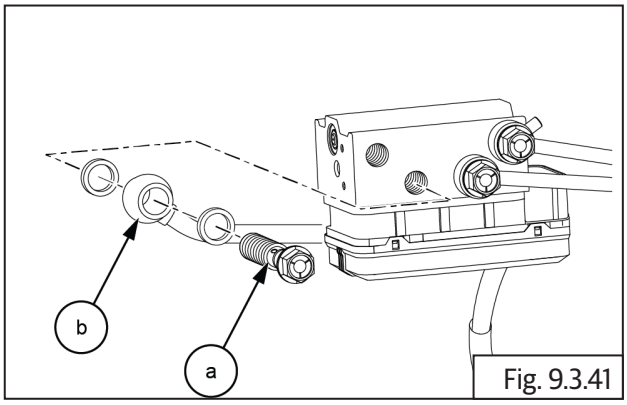

Fig. 9.3.41

- BLUE Modulator to front master cylinder assembly hose.

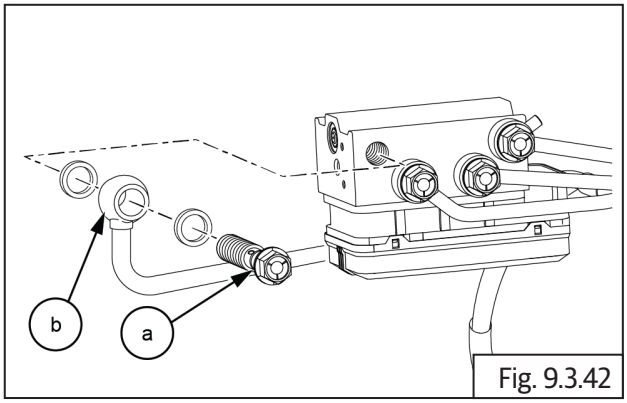

Fig. 9.3.42

- Locate the ABS modulator **(a)** into bracket along with 4 Nos. brake hoses.

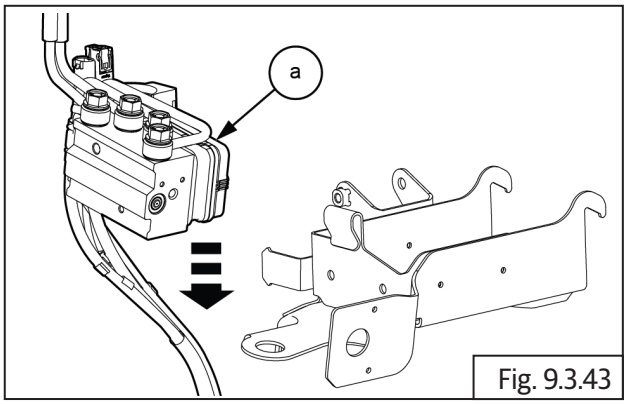

Fig. 9.3.43

- Locate and tighten hex bolt **(M6) (a)** at the LH side of bracket .

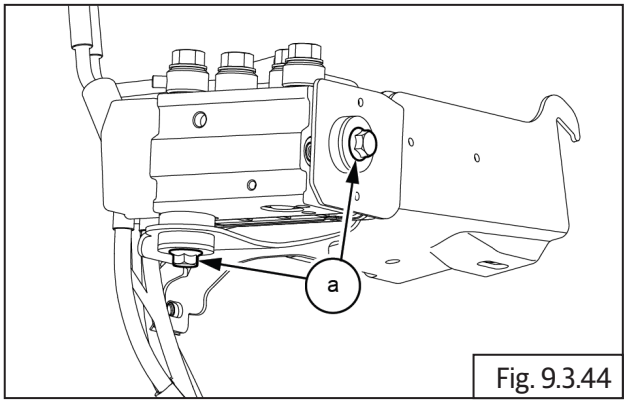

Fig. 9.3.44

	10 mm Socket with Ratchet
Torque	10 N-m / 1.0 kgf-m

- Gently locate and assemble modulator **(a)** along with bracket and 4 Nos. hoses **(b)** into frame.

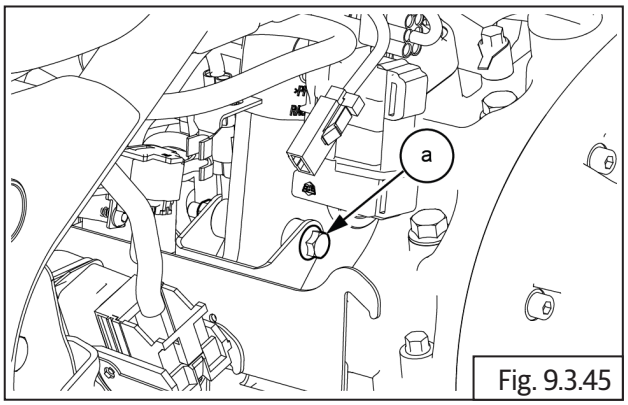

Fig. 9.3.45

- Locate and tighten 3 Nos. hex head bolds **(M6) (a)** holding ABS modulator mounting bracket to frame.
- Ensure all 4 Nos. brake hoses are free to be removed along with modulator from frame.

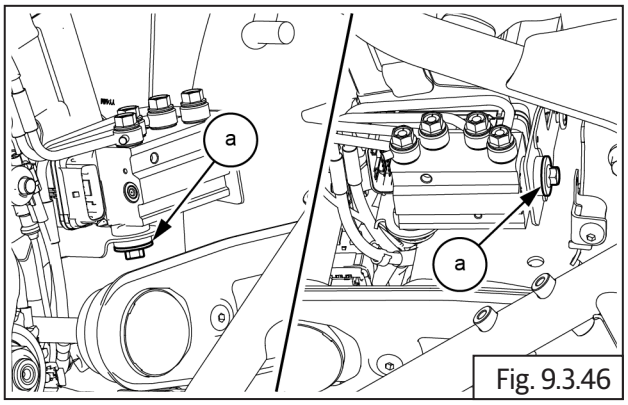

Fig. 9.3.46

	10 mm Socket with Ratchet
Torque	10 N-m / 1.0 kgf-m

- Connect front wheel speed sensor wiring connector **(a)** into harness.

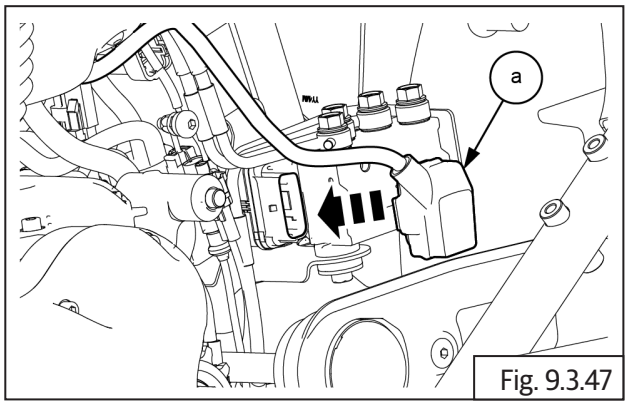

Fig. 9.3.47

- Connect ABS modulator electrical connector **(a)** into engine control unit (ECU) **(b)**.

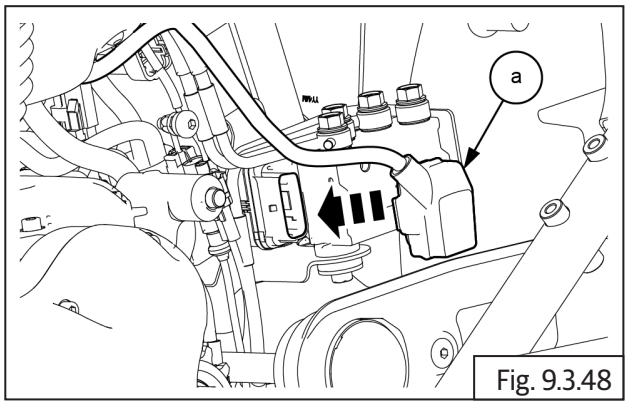

Fig. 9.3.48

- Connect holding straps **(a)** of the brake hoses to the frame/fork end/swing arm.

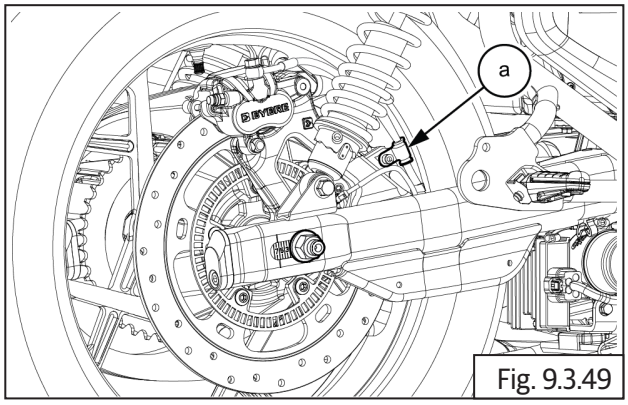

Fig. 9.3.49

- Locate brake hose mounting clamp rear **(a)** into air filter box RH.

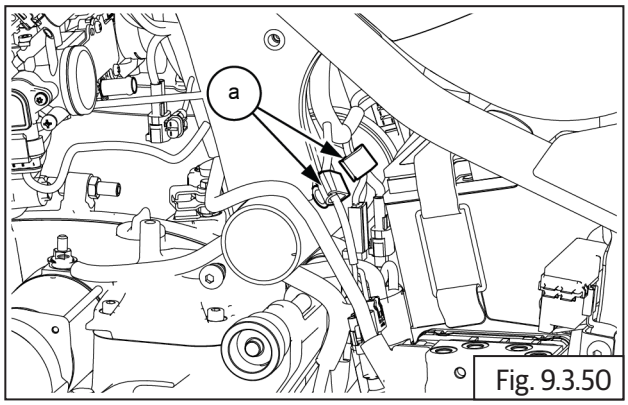

Fig. 9.3.50

- Locate brake hose mounting clamps front **(a)** into frame.

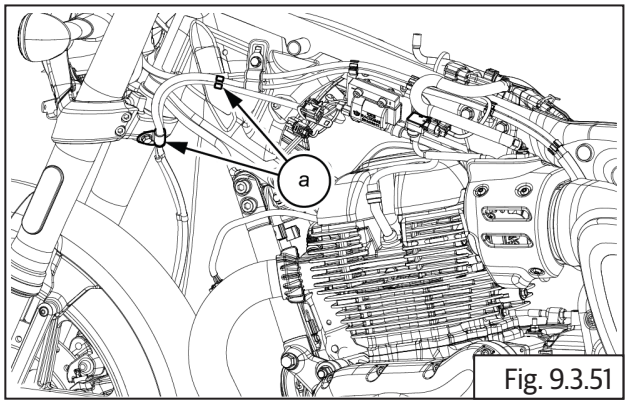

Fig. 9.3.51

- Locate and assemble banjo bolt **(a)** and connect hose into rear master cylinder assembly.

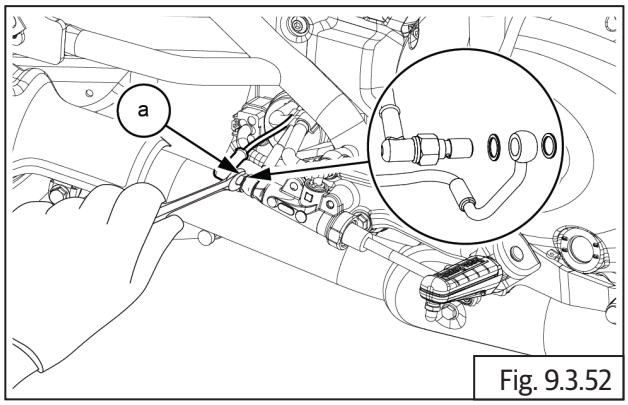

Fig. 9.3.52

	12 mm Double end spanner

- Locate and assemble banjo bolt **(a)** and connect hose **(b)** into rear caliper from rear wheel RH.

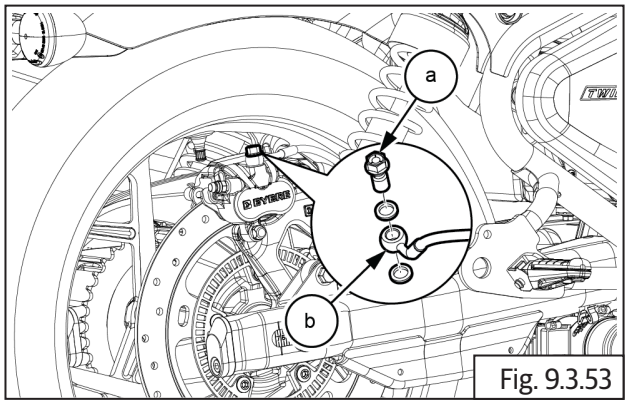

Fig. 9.3.53

	12 mm Double end spanner
Torque	24-28 N-m/2.4-2.8 kgf-m

- Locate and assemble banjo bolt **(a)** and connect hose **(b)** into front master cylinder on handlebar RH.

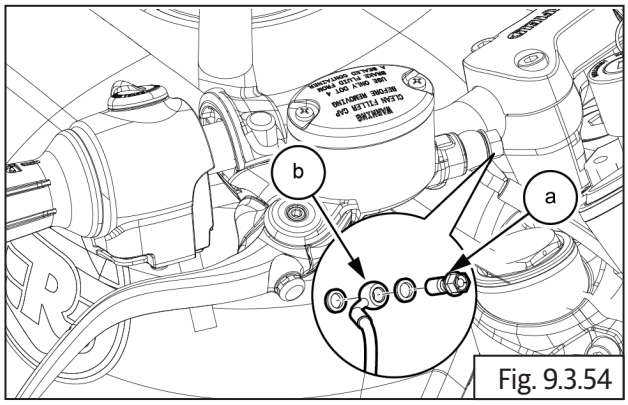

Fig. 9.3.54

	12 mm Double end spanner

- Locate and assemble banjo bolt **(a)** and connect hose **(b)** into front caliper on front fork LH.

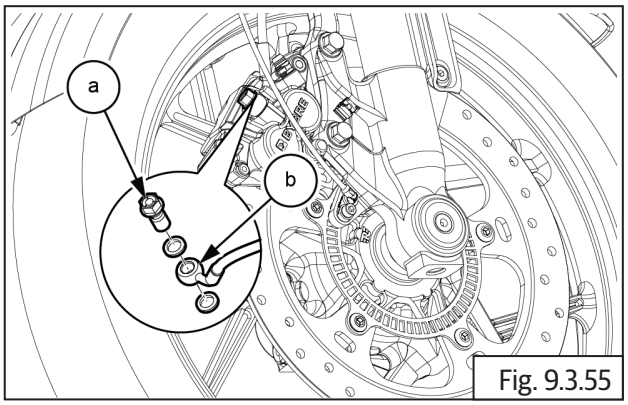

Fig. 9.3.55

	12 mm Double end spanner
Torque	24-28 N-m/2.4-2.8 kgf-m

- Assemble the Fuel tank assembly.
- Assemble the Rider seat.
- Assemble the Side panel RH.

⚠ CAUTION

After assembly of all aggregates, ensure the following:

- **Fuel is refilled/top up into fuel tank.**
- **Fuel feed and return hoses are properly connected into the fuel rail.**
- **Wiring couplers to fuel pump and low fuel sensors are properly connected.**
- **EVAP hose pipes are properly connected.**

⚠ WARNING

Gasoline is extremely flammable and highly explosive. Improper handling can lead to fatal accident or serious injury.

9.3.11 ABS DTC Codes

DTC (P code)	Failure type	Failure Description	Query	Remedy
C1021	ECU	ABS ECU Internal fault	ABS Microcontroller Failure	Change ABS unit
C1019	VR	ABS ECU Relay Fault	Failure in the ABS valve relay	Change ABS unit
C1054	Valves EV	(EV) ABS Apply Solenoid Circuit Open or high Resistance (Front)	Failure in the front Inlet Valve	Change ABS unit
C1052		(EV) ABS Apply Solenoid Circuit Open or high Resistance (Rear)	Failure in the rear Inlet Valve	Change ABS unit
C1049		(AV) ABS Release Solenoid Circuit Open or high Resistance (Front)	Failure in the front Outlet Valve	Change ABS unit
C1048		(AV) ABS Release Solenoid Circuit Open or high Resistance (Rear)	Failure in the rear Outlet Valve	Change ABS unit
C1059	UZ	ABS Voltage High	Battery Voltage Too high	Check the voltage regulator/Battery
C1058		ABS Voltage Lo w	Battery Voltage Too Low	Check the Battery
C1015	RFP/RFP_ HW	ABS Pump/Motor Failure	Failure in the ABS Pump Motor	Change ABS unit
C1033	WSS_ohmic	ABS Wheel Speed Circuit Open or Shorted (Front)	Failure in the Front WSS (electric)	Change Front WSS or Check wiring from WSS to ABS"
C1031		ABS Wheel Speed Circuit Open or Shorted (Rear)	Failure in the Rear WSS (electric)	Change Rear WSS or Check wiring from WSS to ABS
C1034	WSS_ plausibility	ABS Wheel Speed Intermittent (Front)	Signal quality from the front WSS is not good	Check the front toner wheel/ Airgap consistency/WSS bracket
C1032		ABS Wheel Speed Intermittent (Rear)	Signal quality from the Rear WSS is not good	Check the Rear toner wheel/ Airgap consistency/WSS bracket

DTC (P code)	Failure type	Failure Description	Query	Remedy
C1024	WSS_ GENERIC	(GENERIC) ABS Wheel Speed Difference too high	Signal quality from the front/ Rear WSS is not good	Check the front toner wheel/ Airgap consistency/WSS bracket
U2922	CAN_ BUSOFF	High Speed CAN Communications Bus Fault	CAN BusOff failure	Check for CAN lines connection
U2921	CAN_ GENERIC	CAN Generic monitoring	CAN controller failure. Diagnosis is not possible with tester in this case.	Change ABS unit

Bleeding the Hydraulic Brake System With DOL Tool (Front & Rear)

9.4. Preparation (Front Disc Brake)

- Use a Philips screwdriver to loosen and remove the screws of the front disc brake master cylinder.
- Remove the cap, and Diaphragm Plate with diaphragm.
- Remove the dust cap and place the suitable ring spanner on the bleeding nipple and attach a Vinyl Pipe (transparent).
- Thereafter, take a Clean glass / Plastic container (transparent) with fresh brake fluid, and dip the other end of the vinyl pipe (transparent) in it (make sure that the vinyl pipe is always submerged in the fluid during the bleeding process).

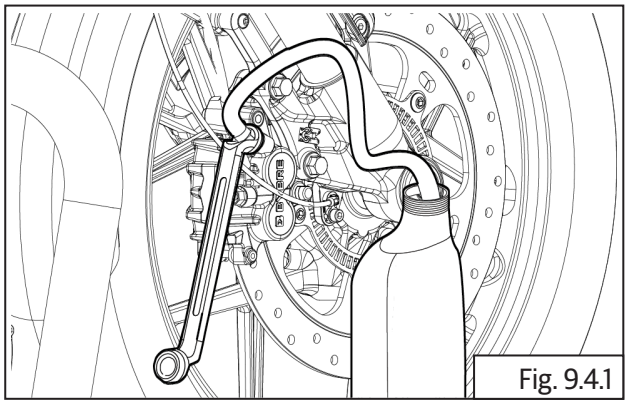

Fig. 9.4.1

- Connect the DOL tool switch "ON" the ignition.

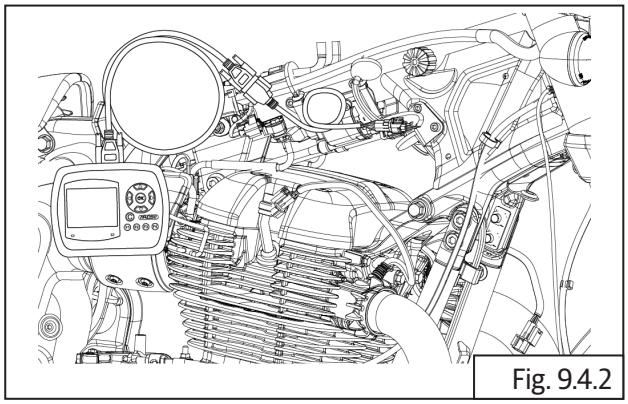

Fig. 9.4.2

Procedure

- Select – F1 Diagnosis.

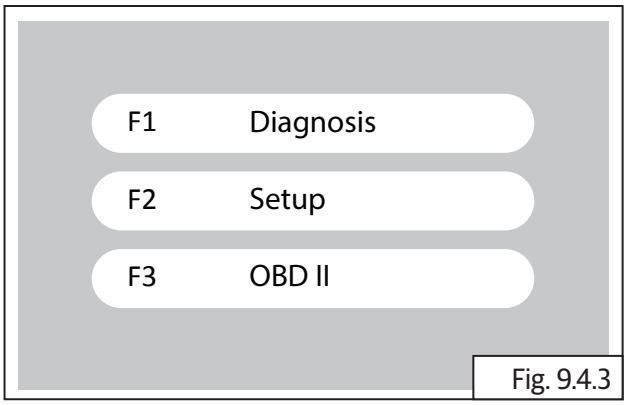

Fig. 9.4.3

- Select – Royal D1.

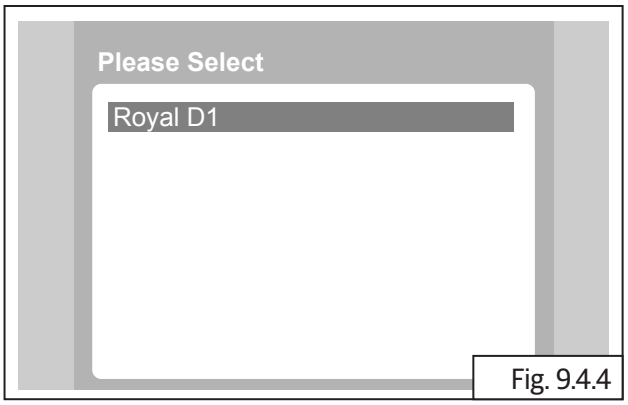

Fig. 9.4.4

- Select – Bosch ABS.

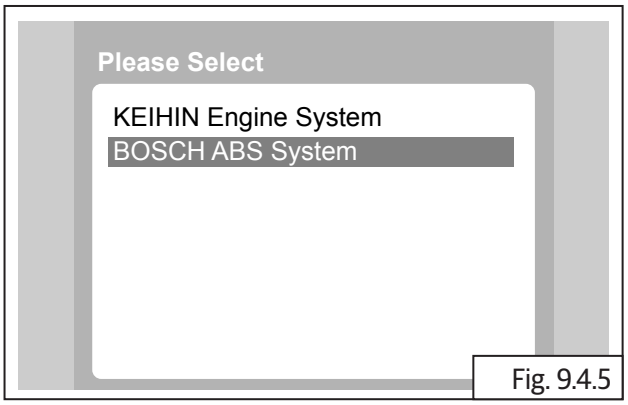

Fig. 9.4.5

- Default Screen.

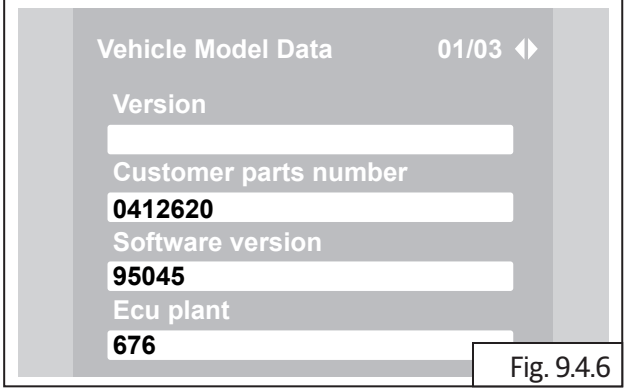

Fig. 9.4.6

- Press C.



Fig. 9.4.7

- Select - Spl Function.

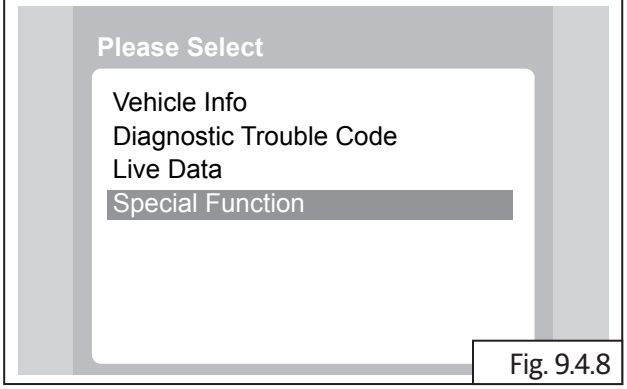

Fig. 9.4.8

- Select - Repair Air Bleed.

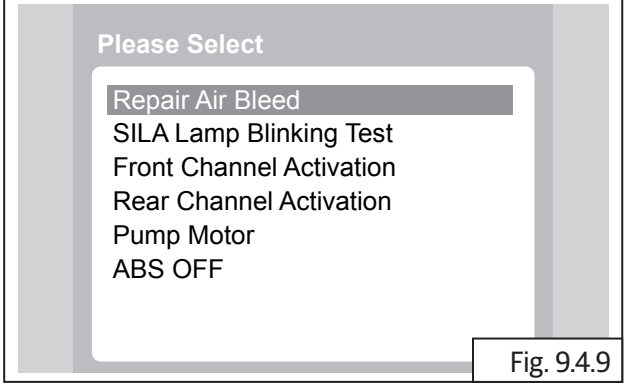

Fig. 9.4.9

- Default Screen.

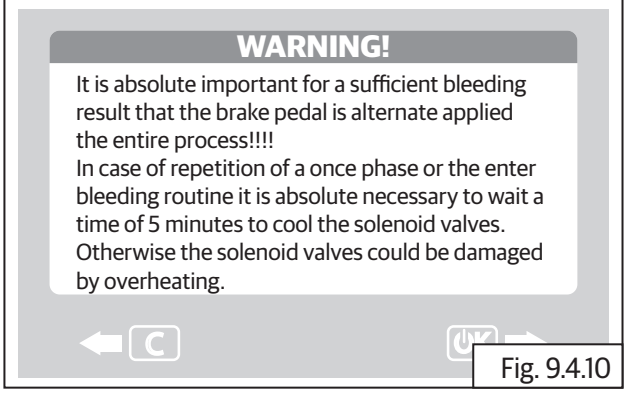

Fig. 9.4.10

- Default Screen.

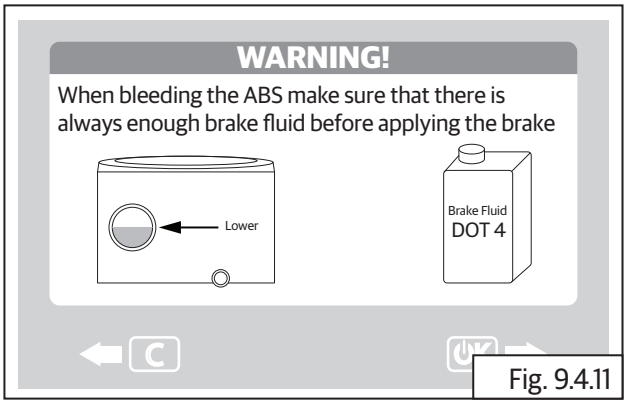

Fig. 9.4.11

- Loosen the bleeder nipple.

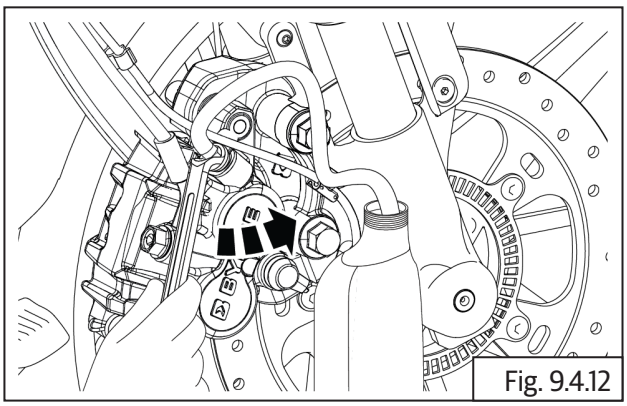

Fig. 9.4.12

- Operate the brake lever.

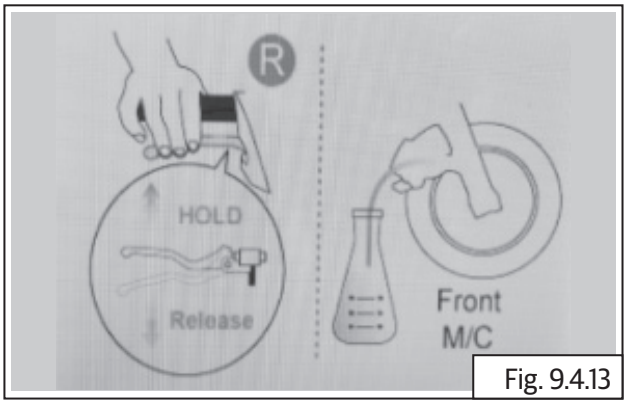

Fig. 9.4.13

- Hold the lever in pressed condition and tighten the bleeder nipple.

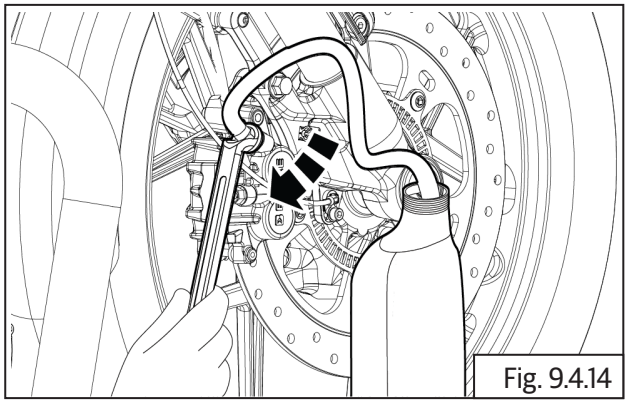

Fig. 9.4.14

- Loosen the bleeder nipple – (Brake lever in released condition).

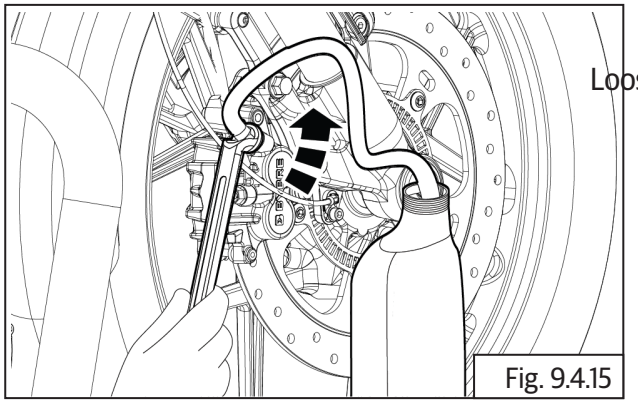

Fig. 9.4.15

- Operate the brake lever till the next window open in DOL.

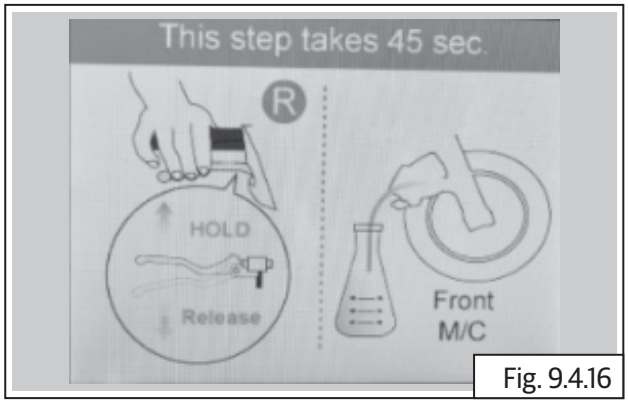

Fig. 9.4.16

- Hold the brake lever in pressed condition and tighten the bleeding nipple.

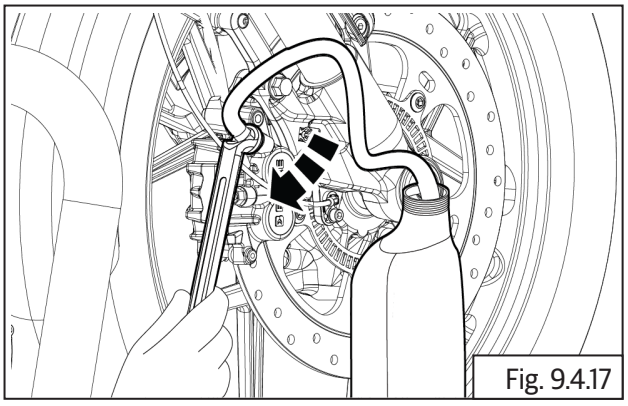

Fig. 9.4.17

- During this operation pump will run and expel the air trapped in the system through bleeder nipple.

9.5. Reassembly

- Switch OFF the ignition.
- Disconnect the DOL Tool.
- Remove the vinyl pipe and remove the ring spanner.
- Refit the dust cap (make sure that there is no leak from the bleeder nipple).
- Refit the diaphragm with diaphragm plate of the master cylinder.
- Refit the master cylinder cap taking care that the vent slot in the cap is facing rider.

9.6. Preparation (Rear Disc Brake)

- Remove the reservoir cap of the rear disc brake.
- Remove the Diaphragm Plate with diaphragm.
- Remove the dust cap and place the suitable ring spanner on the bleeding nipple.
- Attach a Vinyl Pipe (transparent).
- Thereafter, take a Clean glass / Plastic container (transparent) with fresh brake fluid, and dip the other end of the vinyl pipe (transparent) in it (make sure that the vinyl pipe is always submerged in the fluid during the bleeding process).

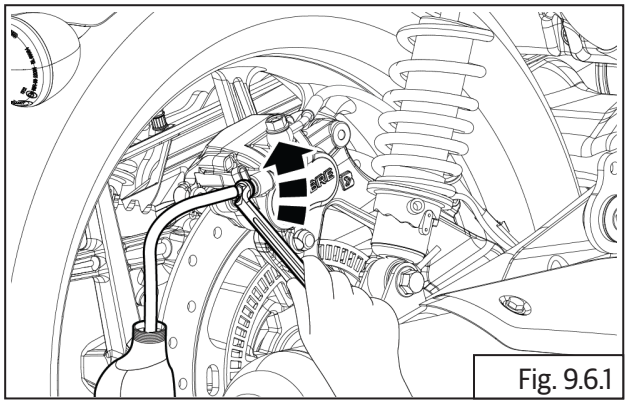

Fig. 9.6.1

- Connect the DOL tool switch on the ignition

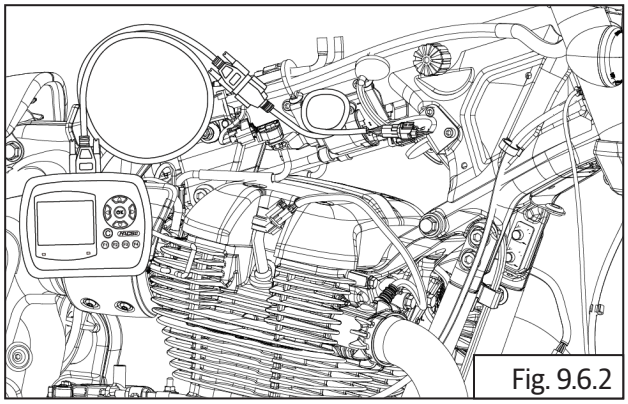

Fig. 9.6.2

- Loosen the bleeder nipple.

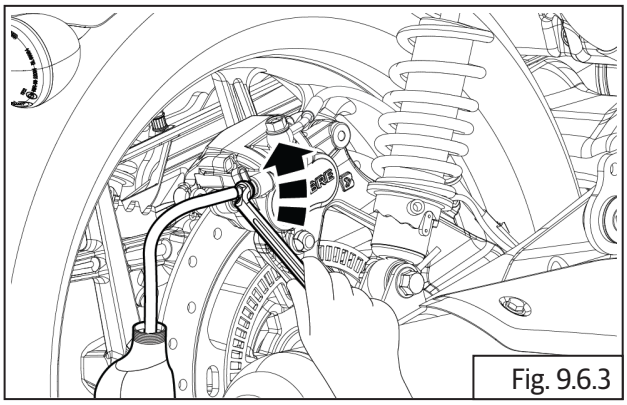

Fig. 9.6.3

- Default Screen.

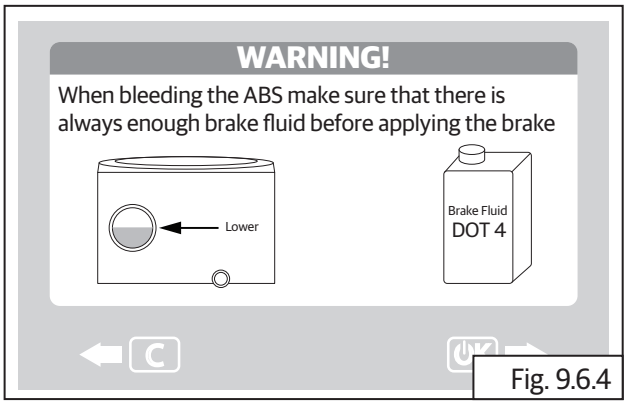

Fig. 9.6.4

- Operate the brake lever.

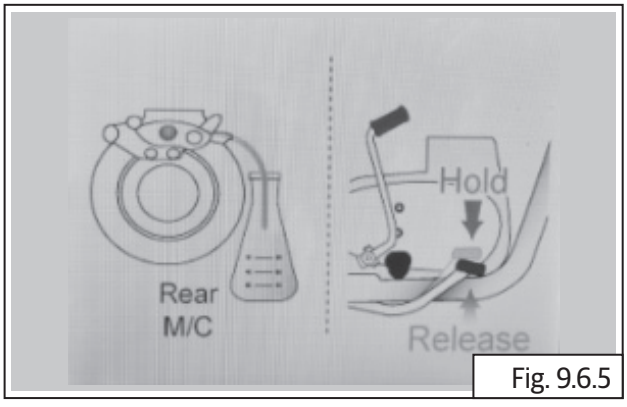

Fig. 9.6.5

- Hold the brake Pedal in pressed condition and tighten the bleeding nipple.

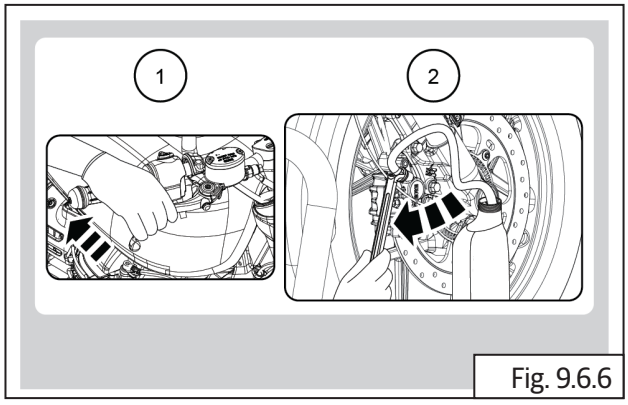

Fig. 9.6.6

- Loosen the bleeder nipple – (Brake lever in released condition)

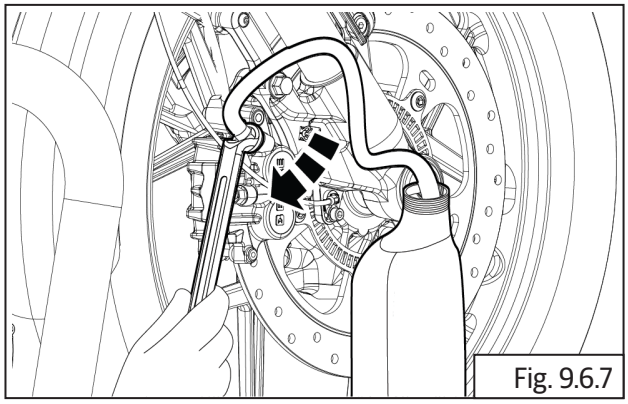
Fig. 9.6.7

- Operate the brake lever until the next window opens in DOL.

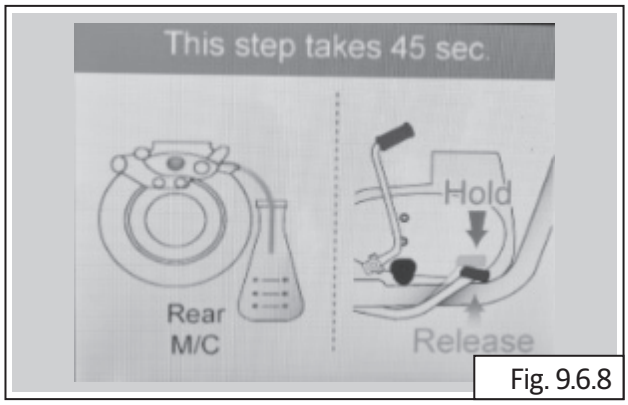

Fig. 9.6.8

- Hold the brake lever in pressed condition and tighten the bleeding nipple.

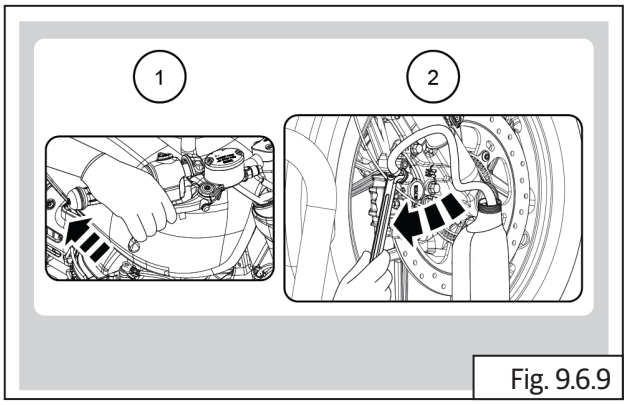

Fig. 9.6.9

- During this operation pump will run and expel the air trapped in the system through bleeder nipple

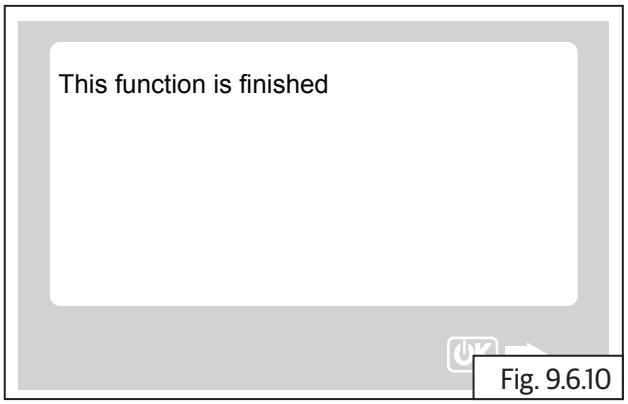

Fig. 9.6.10

9.7. Reassembly

- Switch OFF the ignition and disconnect and remove the DOL tool.
- Remove the vinyl pipe and remove the ring spanner.
- Refit the dust cap (make sure that there is no leak from the bleeder nipple).
- Refit the diaphragm with diaphragm plate of the reservoir.
- Refit the reservoir cap.

BRAKE BLEEDING (Front & Rear)

Manual Method

9.8. Brake Bleeding

⚠ CAUTION

Ensure the motorcycle is upright on a firm and flat surface.

Support motorcycle with suitable equipment below cradle frame.

- Position the screw jack directly under the boss of the crank case.
- Carefully use the screw jack to lift the motorcycle until the front wheel is off the ground.
- Make sure the motorcycle is stable and secure before performing any maintenance or repairs.

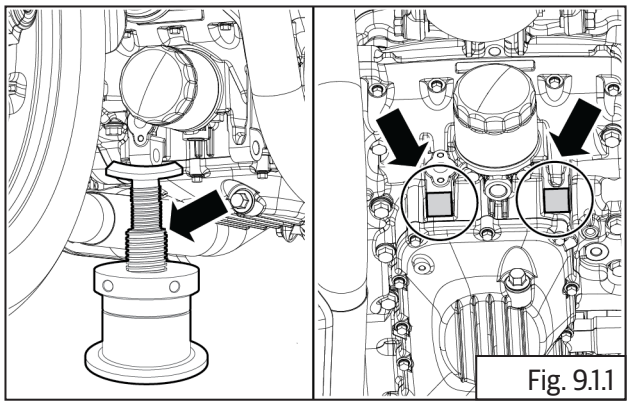

Fig. 9.1.1

⚠ CAUTION

Do not spill brake fluid on any part of the motorcycle as it will damage the painted/ plastic surfaces.

⚠ WARNING

Ensure brake fluid does not get in contact with eyes and skin. In-case of exposure wash affected area thoroughly with water. Seek medical attention immediately if any irritation persists.

Keep out of reach of children.

Dispose drained brake fluid carefully and responsibly.

⚠ WARNING

Brake fluid is Hygroscopic hence, absorbs moisture from air. Ensure fluid reservoirs caps are closed properly.

If moisture in the brake system may cause damage to brake parts and fluid, causing reduction in braking efficiency; which in turn may lead to fatal accidents.

NOTE

- *Use brake fluid from sealed containers only.*
- *Use only DOT4 specification brake fluid listed in technical specifications.*
- *Ensure ignition switch and stop switch are in ON position.*

9.8.1. Front Brake Bleeding

- Loosen and remove 2 Nos. screws **(a)** from front brake reservoir tank.

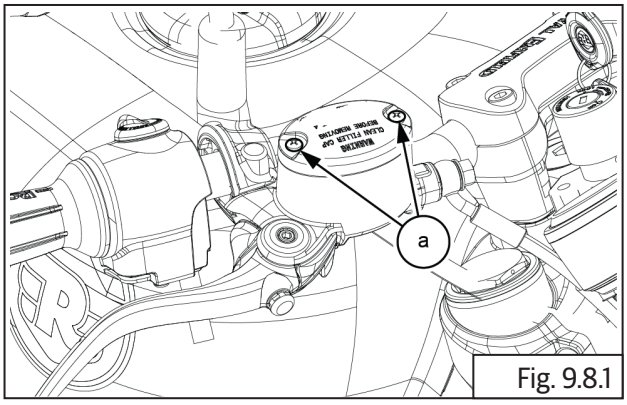

Fig. 9.8.1

	Screw driver phillips

- Remove reservoir cap **(a)** from front brake reservoir tank **(b)**.

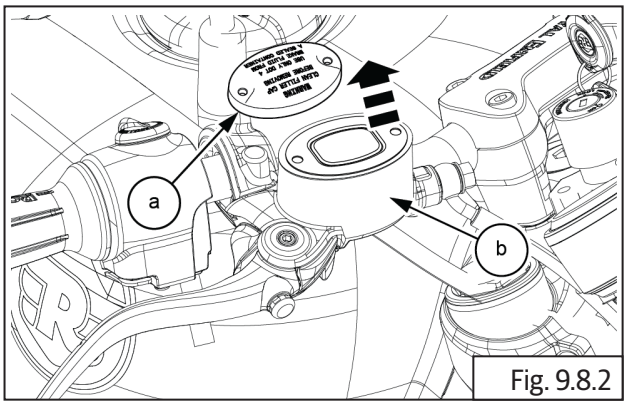

Fig. 9.8.2

- Gently top up fresh brake fluid **(a)** into reservoir **(b)**.

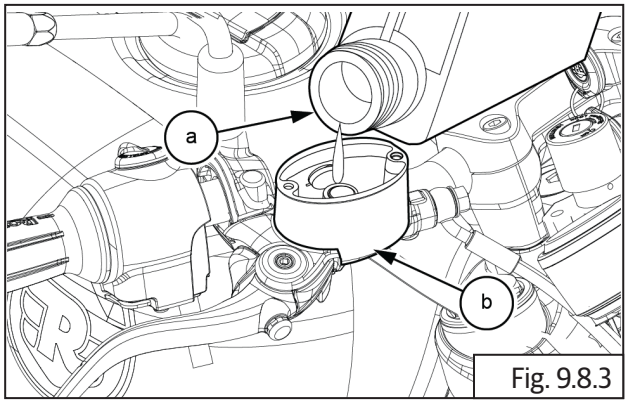

Fig. 9.8.3

- Locate diaphragm and cap **(a)** on the reservoir and DO NOT fasten with screws.

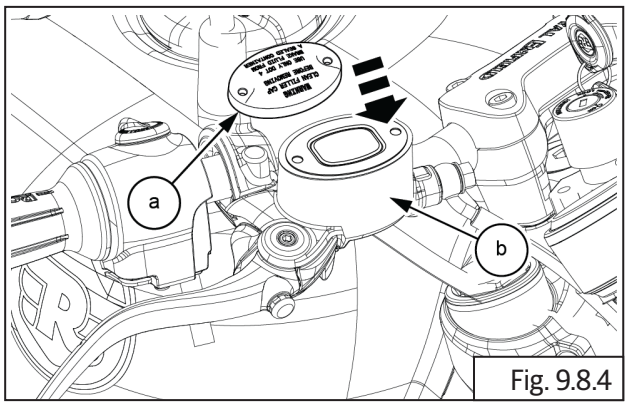

Fig. 9.8.4

- Remove rubber cap **(a)** from bleeder valve **(b)** from front caliper on front wheel RH.

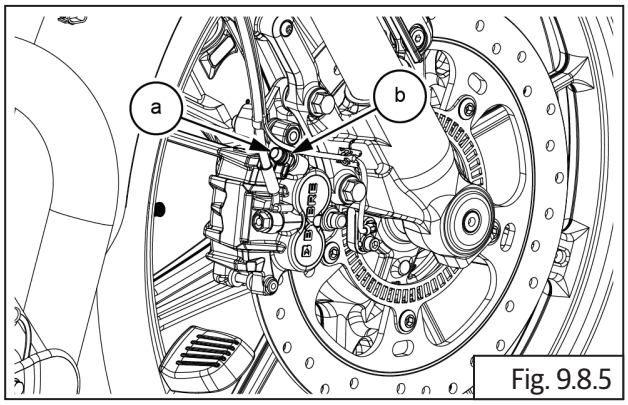

Fig. 9.8.5

- Dip bleeder hose one end into a container with fresh brake fluid to avoid air passage into bleeder valve.
- Insert bleeder hose other end into bleeder valve on front caliper to drain used oil.

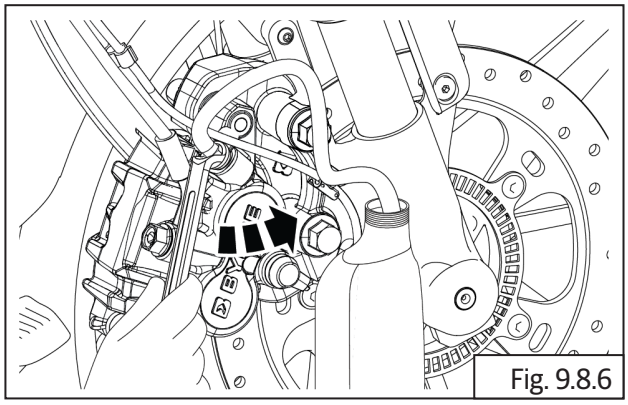
Fig. 9.8.6

NOTE
• *Use brake fluid from new, sealed containers only.*
• *Use only DOT4 specification brake fluid listed in technical specifications.*

- Gently pump brake lever until brake is effective.
- Once brake lever is effective, hold it in place.

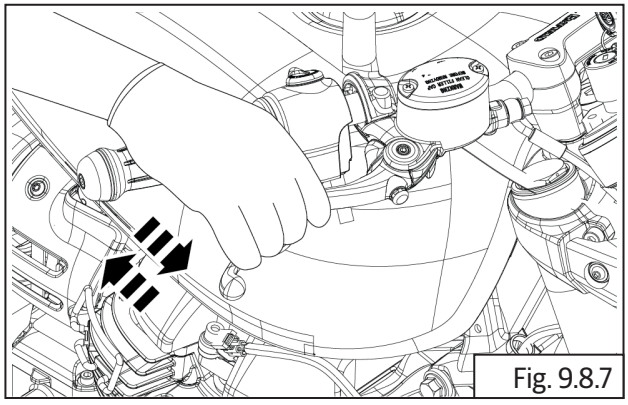
Fig. 9.8.7

- While holding brake lever, quickly open and close bleeder valve .

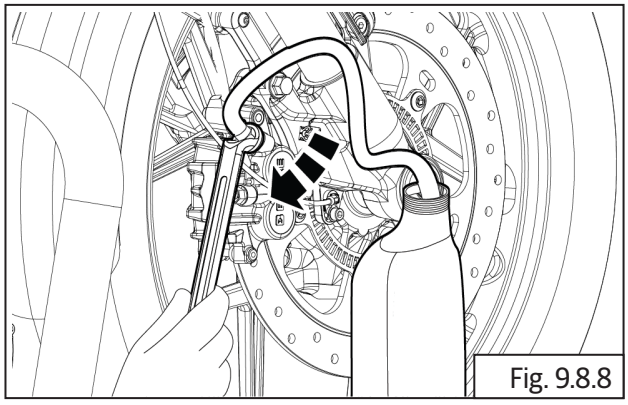

Fig. 9.8.8

	11 mm Ring spanner and air bleeder.

- Release the brake lever.

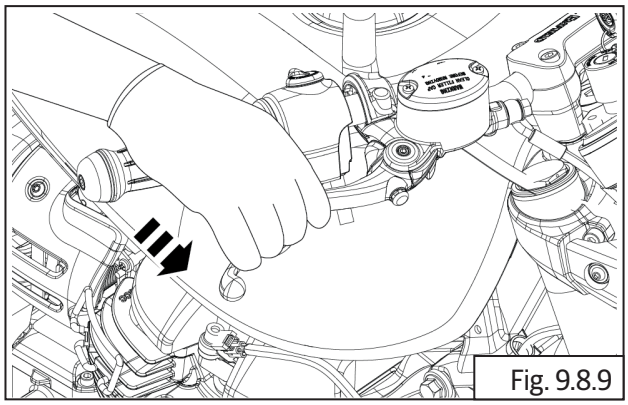

Fig. 9.8.9

- Gently top up fresh brake fluid **(a)** into reservoir **(b)**.
-

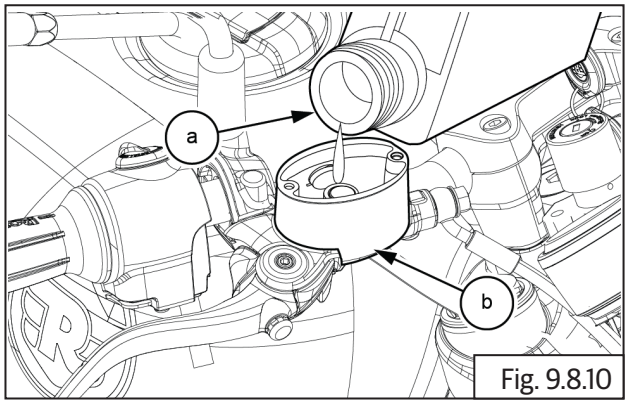

Fig. 9.8.10

- Repeat this operation until air from the system is released completely. Observe bleeder hose. As air in the system is cleared, bubbles stop appearing in hose.

⚠ CAUTION

While bleeding the brake system always ensure brake fluid is above min level BUT below "Max" level. Never allow the brake fluid go below minimum level to avoid air entering brake system. Always fill the brake fluid from sealed container only.

Do not leave the master cylinder cap and or brake fluid container open for long as brake fluid is highly hygroscopic in nature a and will loose its properties if exposed to atmospheric conditions.

- Inspect brake lever efficiency.

NOTE

- *The fluid level must be checked often during the bleeding operation and top up with fresh brake fluid as necessary.*
- *Gently tap brake hose for proper bleeding performance.*
- *Check brake fluid level after completion of brake bleeding.*
- *Whenever the modulator is removed or replaced the brake bleeding time will be longer as brake fluid will have to travel from master cylinder to modulator and then to wheel caliper*
- *Whenever bleeding the brake system, it is always recommended to bleed both the front and rear brakes.*

- Remove bleeder hose from bleeder valve.

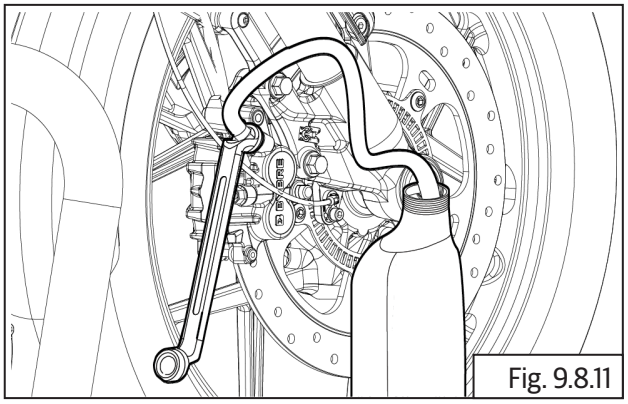

Fig. 9.8.11

- Close rubber cap **(a)** on bleeder valve **(b).**
- Ensure cap is locked properly to avoid exposure to dust or mud.

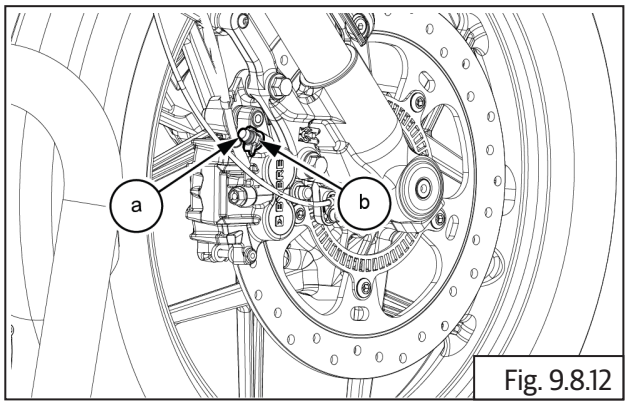

Fig. 9.8.12

- Install reservoir diaphragm **(a)** into front brake reservoir tank **(b)**.

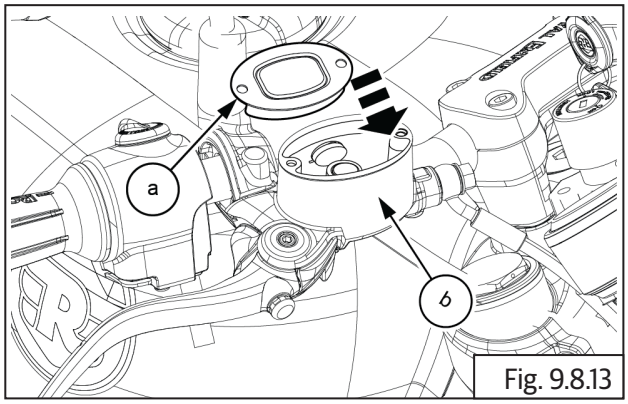

Fig. 9.8.13

- Locate and tighten 2 Nos. screws **(a)** into front brake reservoir tank.

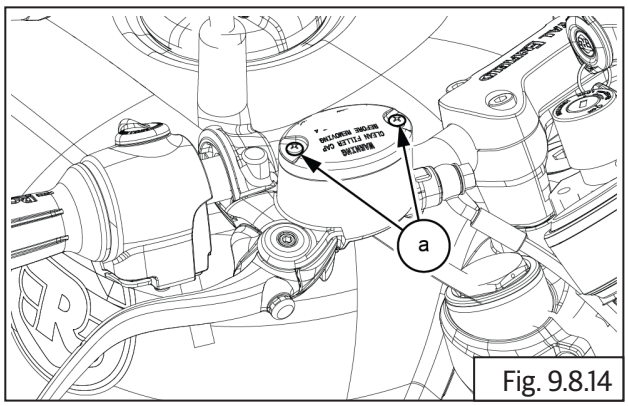

Fig. 9.8.14

	Screw driver

9.8.2. Front Brake Fluid Leakage

⚠ CAUTION

Ensure motorcycle is placed on a flat surface resting it on ramp/center stand.

NOTE

- *Inspect fluid level at every 5000 Km (300 miles). Replace fluid after 25000 Km (1500 miles).*

- Inspect fluid level, visible in window glass on front reservoir tank **(a)**.
- Ensure brake fluid level is always above 'MIN' mark **(b)** on window.

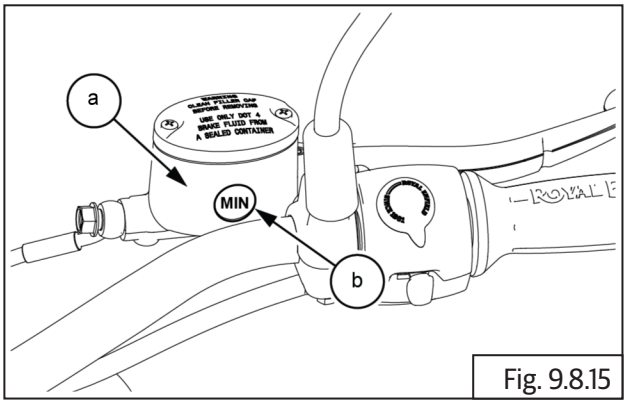

Fig. 9.8.15

- If oil level is below 'MIN', inspect leakage at front brake hoses and front master cylinder banjo bolt.

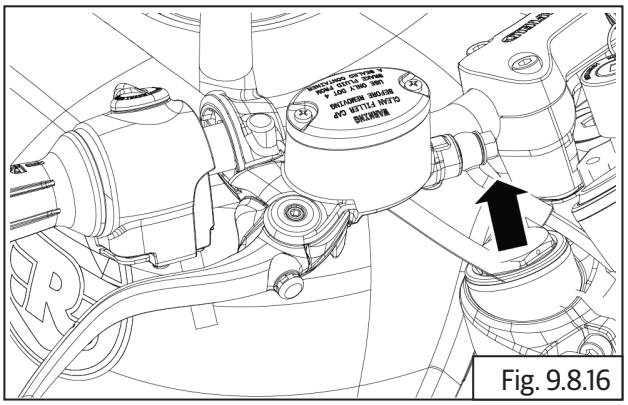
Fig. 9.8.16

- Inspect leakage at caliper banjo bolt.

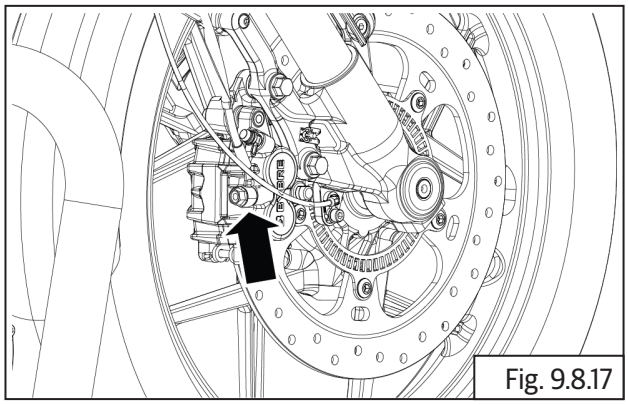

Fig. 9.8.17

- Inspect leakage on brake disc from caliper piston.

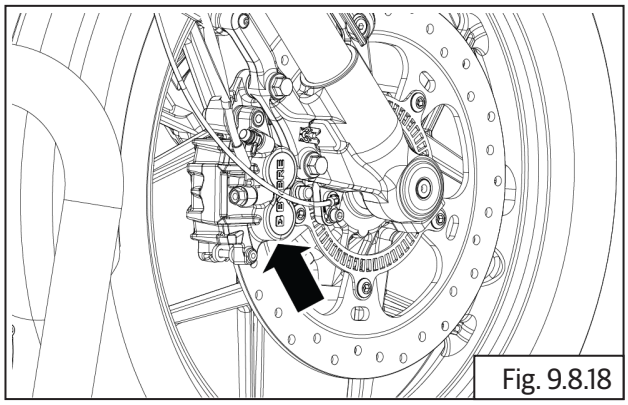

Fig. 9.8.18

- Inspect fluid leakage at hoses at ABS modulator.

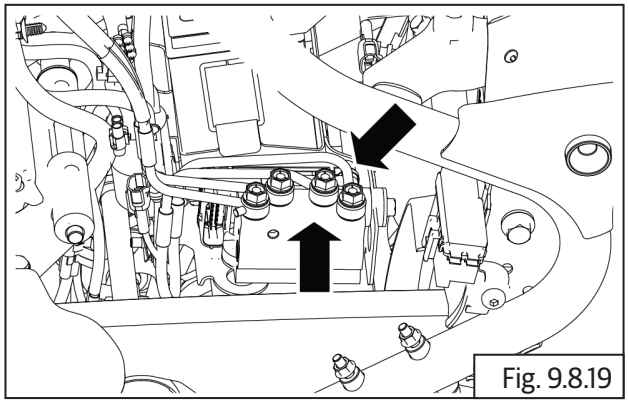

Fig. 9.8.19

9.8.3. Front Brake Fluid Top up

- Loosen and remove 2 Nos. screws **(a)** from front brake reservoir tank.

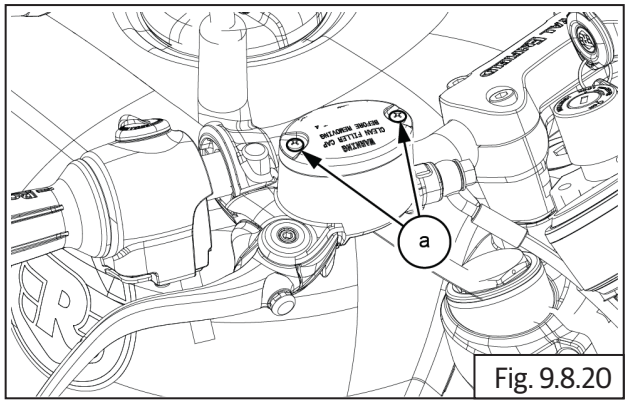

Fig. 9.8.20

	Screw driver

- Remove reservoir cap **(a)** from front brake reservoir tank **(b)**.

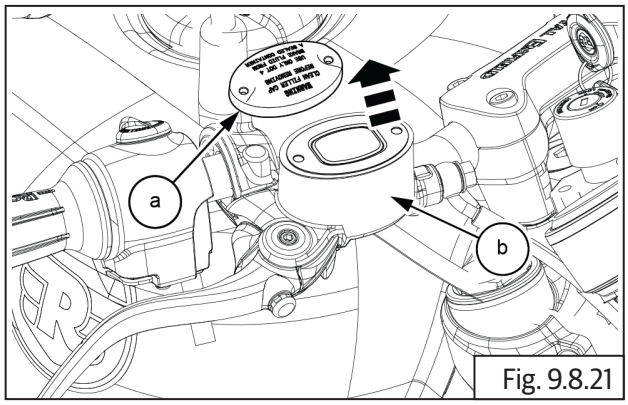

Fig. 9.8.21

- Remove reservoir diaphragm **(a)** from front brake reservoir tank **(b)**.

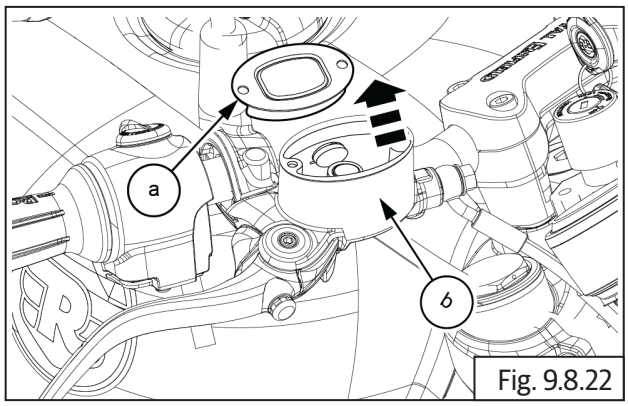

Fig. 9.8.22

- Top up fresh fluid **(a)** into reservoir tank **(b)** up to 'MAX' mark on the window.
- Do not over fill as it may cause malfunctioning of some parts due to brake fluid spillage.

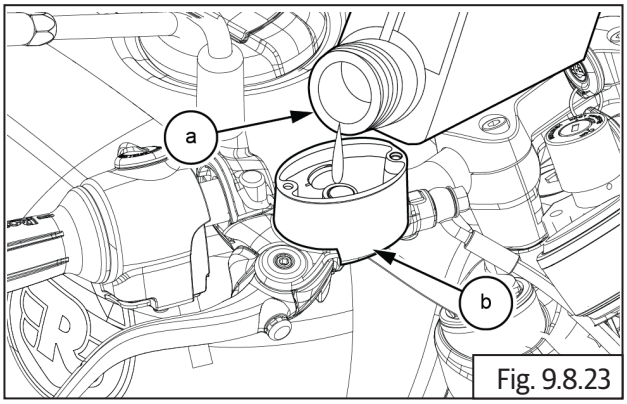

Fig. 9.8.23

9.8.4. Rear Brake Bleeding

⚠ CAUTION

Ensure the motorcycle is upright on a firm and flat surface.

Support motorcycle with suitable equipment below cradle frame.

- Rear brake reservoir is located near rear wheel on cradle frame.
- Open rear brake reservoir cap **(a)** from reservoir **(b)**.

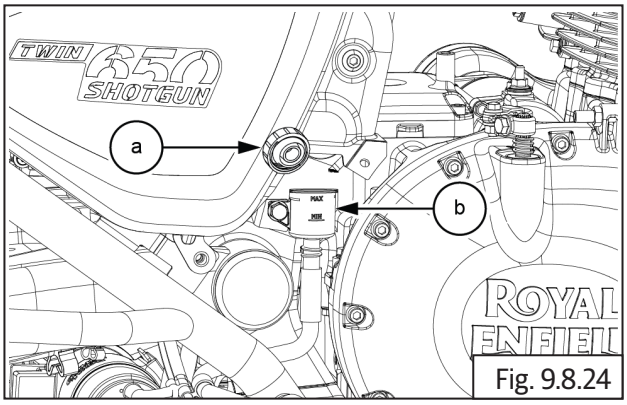

Fig. 9.8.24

NOTE

- *Use brake fluid from sealed containers only.*
- *Use only DOT4 specification brake fluid listed in technical specification Information .*

- Fill fresh brake fluid **(a)** into reservoir **(b)**.

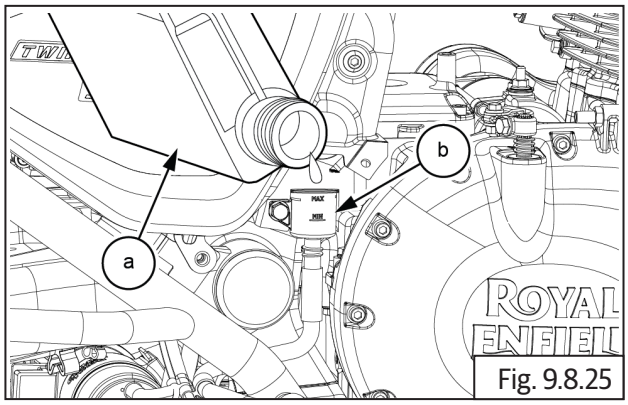

Fig. 9.8.25

- Do not over fill as it may cause malfunctioning of some parts due to brake fluid spillage.
- Locate the reservoir cap **(a)** on the tank and ensure it is seated properly.

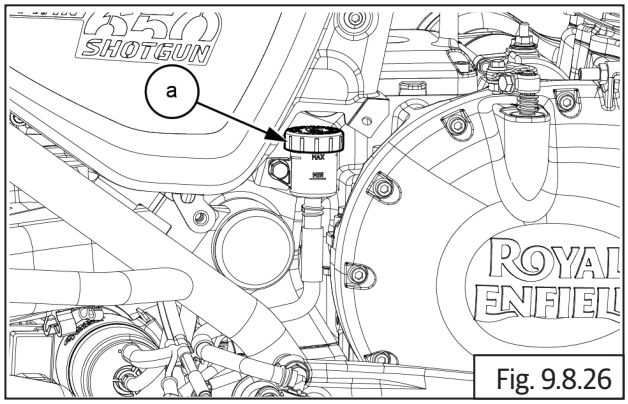

Fig. 9.8.26

- Locate rear brake bleeder valve on rear wheel brake caliper, behind silencer.
- Open rubber cap **(a)** from rear brake bleeder valve **(b)**.

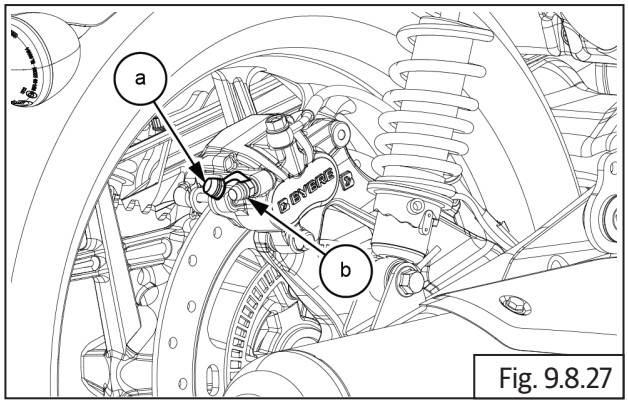

Fig. 9.8.27

- Dip bleeder hose **(a)** one end into a container **(b)** with fresh brake fluid to avoid air passage into bleeder valve.
- Insert bleeder hose other end into bleeder valve **(M6) (c)** on front caliper to drain used oil.

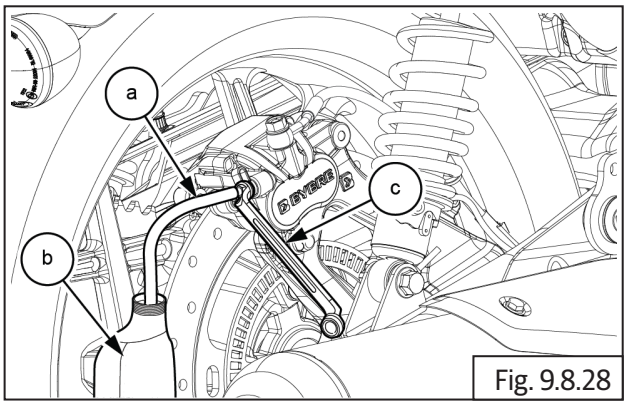

Fig. 9.8.28

	11 mm Ring spanner

- Gently pump rear brake pedal until pumping becomes hard and then hold it in place.

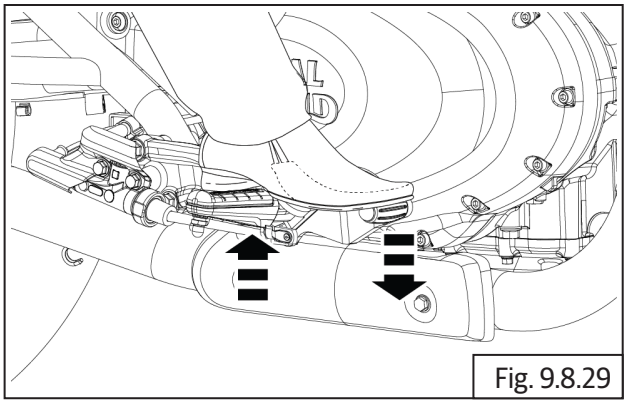
Fig. 9.8.29

- While holding brake, quickly open and close bleeder valve **(M6) (a)**.

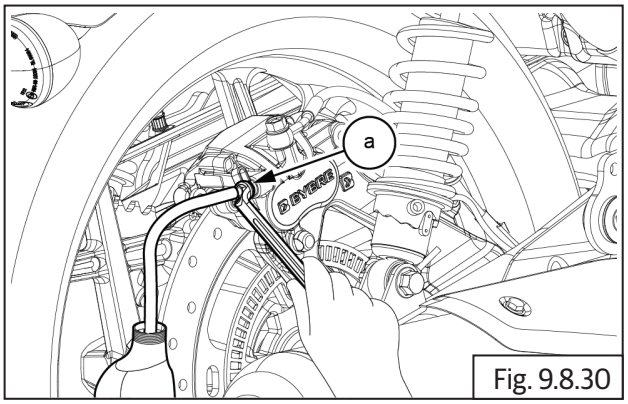

Fig. 9.8.30

- Repeat this operation until air from system is released completely.
- Inspect brake lever efficiency.

NOTE

- *The fluid level must be checked often during the bleeding operation and top up with fresh brake fluid as necessary.*
- *Gently tap brake hose for proper bleeding performance.*
- *Check brake fluid level after completion of brake bleeding.*

- Remove bleeder hose **(a)** from bleeder valve on rear caliper.

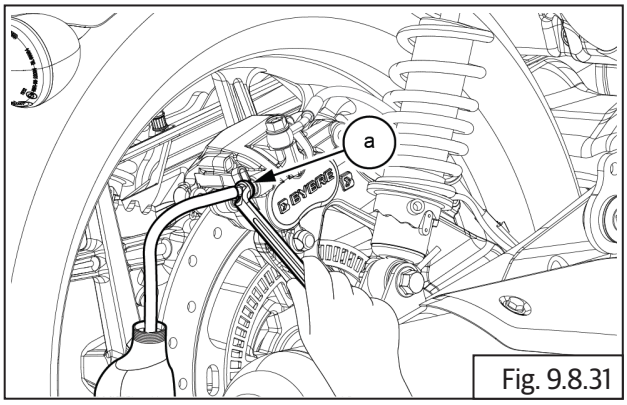

Fig. 9.8.31

- Close bleeder valve **(a)** rubber cap **(b)**.
- Ensure cap is locked properly to avoid exposure to dust or mud.

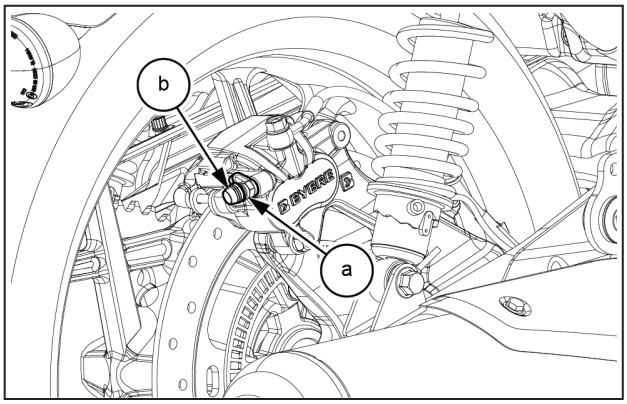

9.8.5. Rear Brake Fluid Leakage

⚠ CAUTION

Ensure the motorcycle is upright on a firm and flat surface.

NOTE

- *Inspect fluid level at every 5000Km (3000 miles). Replace fluid after 25000Km (15000 miles).*

- Inspect fluid level visible on rear reservoir tank.
- Ensure brake fluid level in rear reservoir tank **(a)** is always between 'MIN' and 'Max' marks.

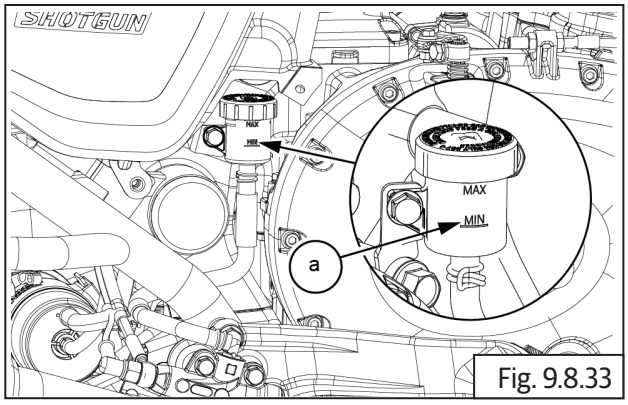

Fig. 9.8.33

- If oil level is below 'MIN', inspect leakage at rear brake hoses and rear master cylinder banjo bolt.

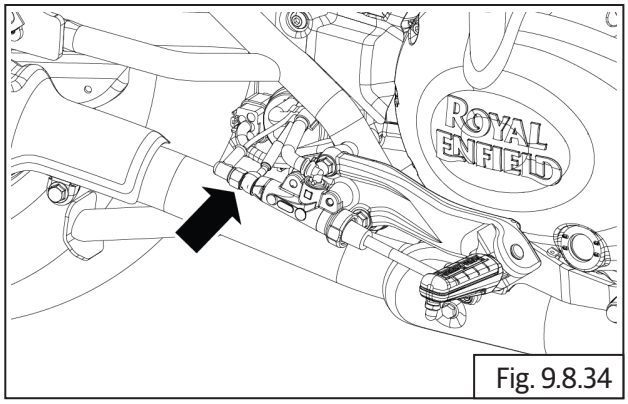

Fig. 9.8.34

- Inspect leakage at rear caliper banjo bolt.

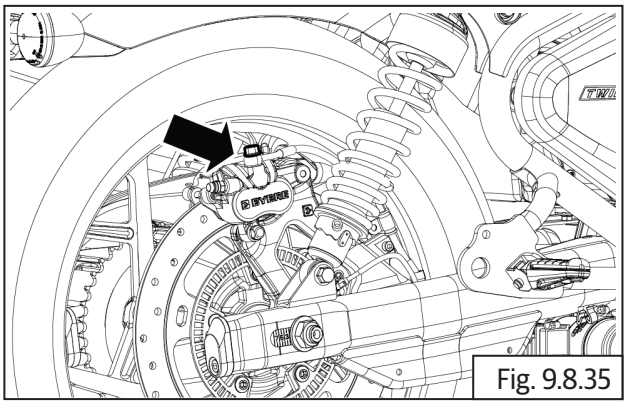
Fig. 9.8.35

- Inspect leakage on brake disc from caliper piston.

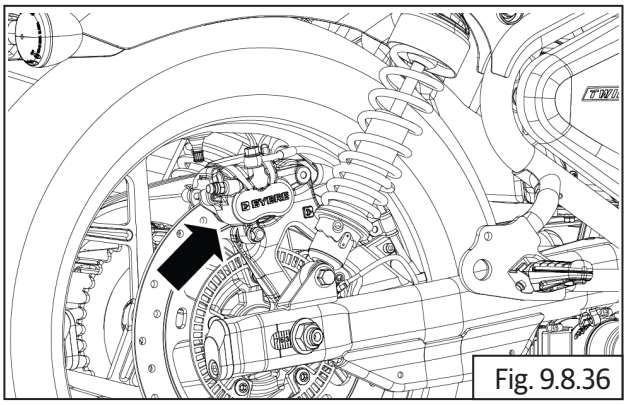
Fig. 9.8.36

- Inspect fluid leakage at hoses on ABS modulator.

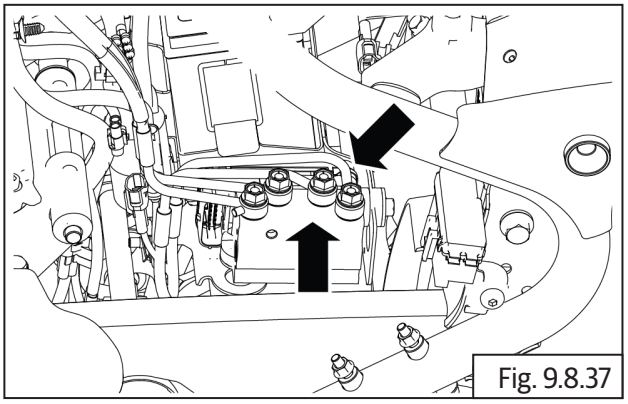
Fig. 9.8.37

9.8.6. Rear Brake Fluid Top Up

- Open rear brake reservoir cap **(a)** from reservoir **(b)**.

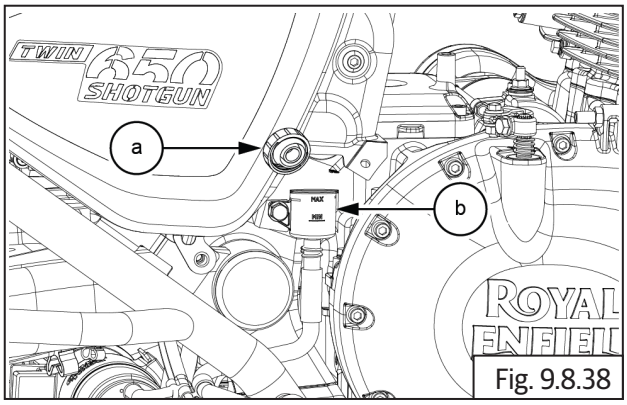

Fig. 9.8.38

- Top up fresh brake fluid **(a)** into reservoir tank **(b)** only up to MAX level. Do not over fill as it may cause malfunctioning of some parts due to brake fluid spillage.

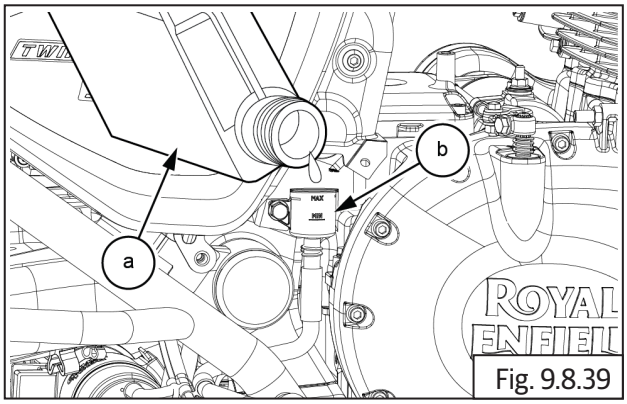

Fig. 9.8.39

- Locate the reservoir cap **(a)** on the tank and ensure it is seated properly.

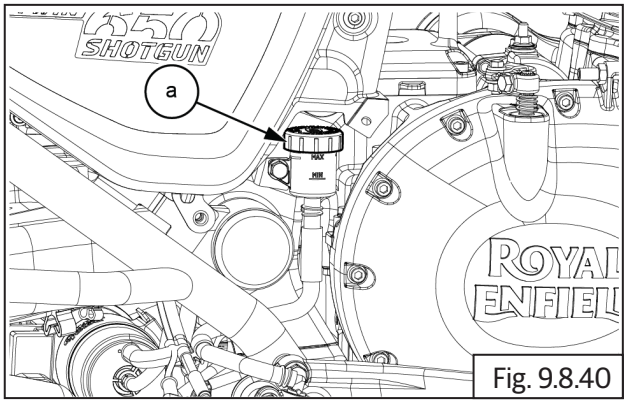

Fig. 9.8.40

ENGINE MANAGEMENT SYSTEM (EMS)

CONTENTS PAGE

10. Engine Management System (EMS) 605

System Layout 605

EMS Components 605

Functional Diagram 606

Functional Specifications..... 606

1. Electronic Control Unit (ECU)..... 606
2. Fuel Injectors 607
3. Fuel Supply Module 607
4. Throttle Position Sensor 607
5. Manifold Absolute Pressure Sensor (MAP) 608
6. Canister Purge Valve..... 608
7. HEGO Sensor (HEGO / O2) 609
8. Idle Air Control Valve (IAC) 609
9. Engine Oil Temperature Sensor (EOT) 610
10. Intake Air Temperature Sensor (IAT) 610
11. Clutch Switch 610
12. Side Stand Switch..... 611
13. Gear Position Sensor (GPS) 611
14. Roll Over Sensor 611
15. Crank Position Sensor (CPS) 612
16. Starter Motor Relay 612

10.1 Engine Management System (EMS) 613

Dismantling.....613

10.1.1. Engine Control Unit (ECU).....613
10.1.2. Fuel Pump 614
10.1.3. Manifold Absolute Pressure Sensor (MAP).....614
10.1.4. Throttle Body Assembly 615
10.1.5. Throttle Position sensor (TPS) 616
10.1.6. Fuel Injectors.....616
10.1.7. Idle Speed Control (ISC).....617
10.1.8. Engine Oil Temperature Sensor (EOT).....617
10.1.9. HEGO (O2) Sensor 618

CONTENTS PAGE

10.1.10. Intake Air Temperature (IAT) 620
10.1.11. Purge Valve 621
10.1.12. Roll Over Sensor 621
10.1.13. Ignition Coil 622
10.1.14. Ignition Coil LH and RH from bracket 623
10.1.15 Crank Position Sensor 624
10.1.16. Gear Position Sensor 625
10.1.17. Clutch Switch 626
10.1.18. Side Stand Switch 626
10.1.19. Starter Motor Solenoid 628

Assembly 628

10.1.21. Engine Control Unit (ECU) 628
10.1.22. Fuel Pump 629
10.1.23. Fuel injectors 630
10.1.24. Manifold Absolute Pressure Sensor (MAP) 631
10.1.25. Idle Speed Controller (ISC - Stepper Motor) 631
10.1.26. Throttle Body 632
10.1.27. Throttle Position sensor (TPS) 632
10.1.28. Engine Oil Temperature Sensor (EOT) 633
10.1.29. HEGO (O2) Sensors 633
10.1.30. Intake Air Temperature sensor (IAT) 634
10.1.31. Purge Valve 635
10.1.32. Roll Over Sensor 636
10.1.33. Ignition Coil 636
10.1.34. Crank Position Sensor 638
10.1.35. Gear Position Sensor 639
10.1.36. Clutch Switch 640
10.1.37. Side Stand Switch 640
10.1.38. Starter Motor Solenoid 641
10.1.39. Actuator 642
10.1.40. EMS P codes 645

10. Engine Management System (EMS)

Engine Management System is responsible for controlling the amount of fuel being injected and for adjusting the ignition timing. Optimum functioning of EMS assures maximum engine power with the lowest amount of exhaust emissions and lowest fuel consumption.

System Layout

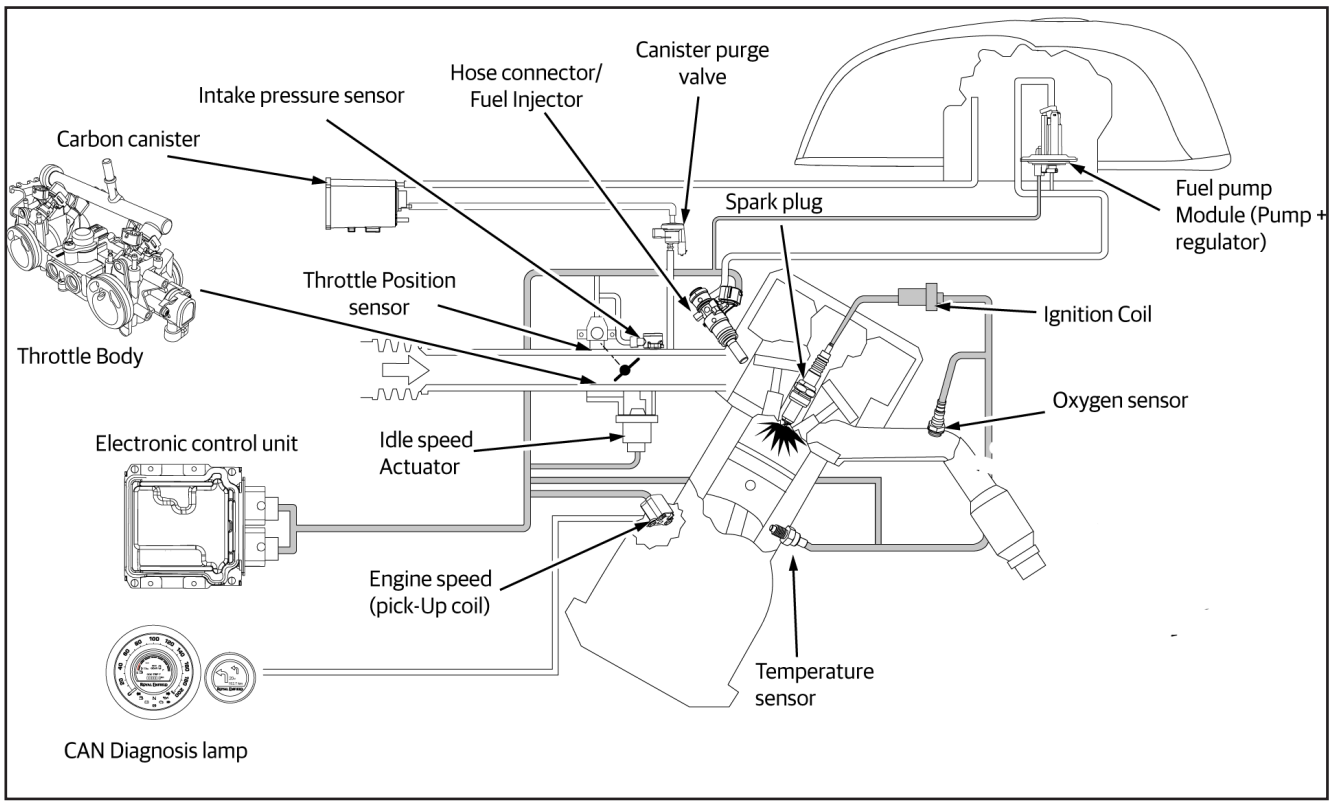

EMS Components

- Electronic Control Unit
- Fuel Injector
- Fuel Supply Module
- Throttle Position Senor
- Manifold Pressure Sensor
- Canister Purge Valve
- HEGO (O2) Sensor
- Idle Air Control Valve
- Engine Oil Temperature Sensor
- Intake Air Temperature Sensor
- Clutch Switch
- Side Stand Switch
- Gear Position Sensor
- Roll Over Sensor
- Crank Position Sensor
- Starter Motor Relay

Functional Diagram

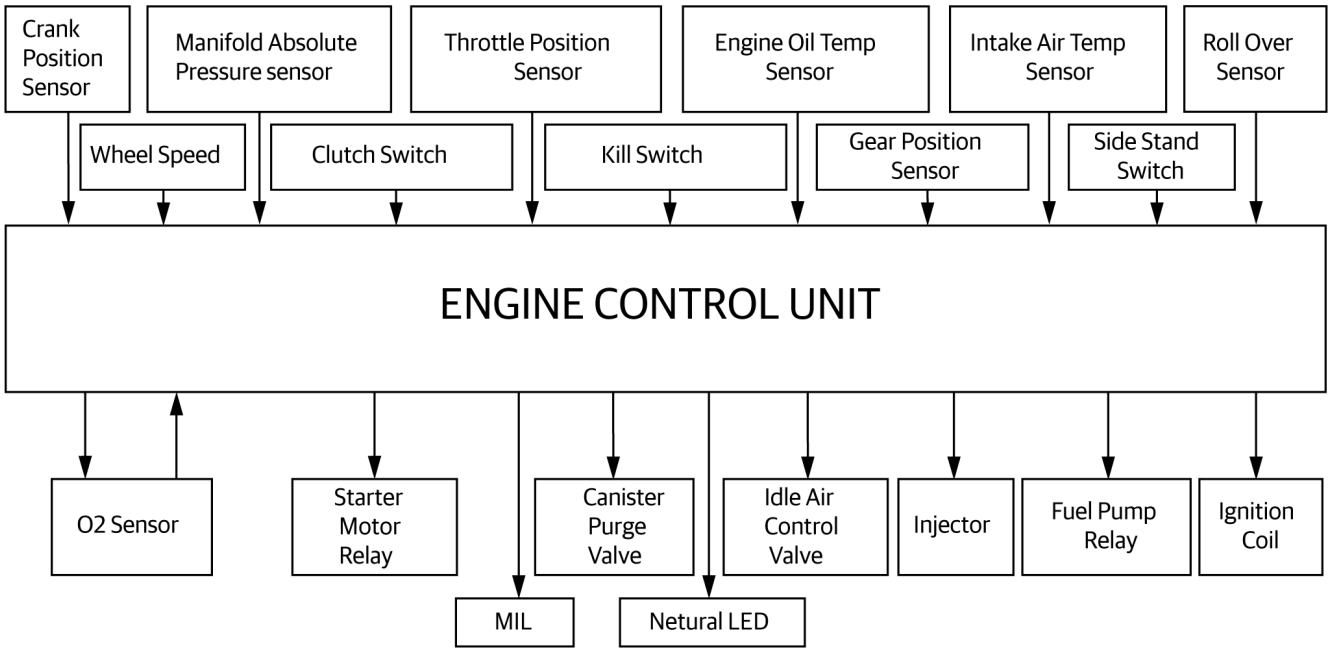

Functional Specifications

1. Electronic Control Unit (ECU)

Electronic Control Unit is any embedded system that controls one or more electrical system or subsystems in a vehicle. Engine Control Unit is a type of Electronic Control Unit that controls a series of actuators on an internal combustion engine to ensure optimal engine performance. It does this by reading values from a multitude of sensors within the engine bay, interpreting the data using multidimensional performance maps (called lookup tables), and adjusting the engine actuators accordingly.

Key Elements:

1.Micro Controller

2.Memory

3.Inputs

4.Outputs

5.Communication Links

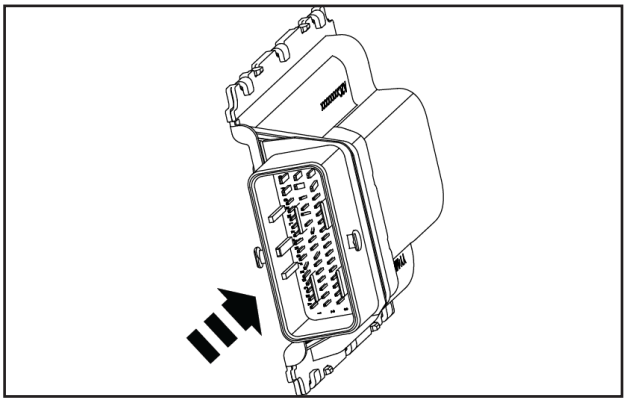

Specification:

Operating Voltage: 9 to 16 V

Operating temperature: -40ºC to 70ºC

2. Fuel Injectors

Fuel injectors that use pintle valves are operated by electromagnetic components called solenoids. The solenoid is activated, or "pulses" by an ECU which causes it to undergo linear movement.
Since the solenoid is mechanically connected to a pintle valve within the fuel injector, the linear movement causes the pintle to move away from its seat. A small amount of highly pressurized fuel then sprays from the pintle nozzle.

Specification:

Resistance: 12Ω ± 0.6Ω at 22 ± 3°C

Operating Voltage : 6 to 16 V

Operating Pressure: 350 ± 3.5 kPa

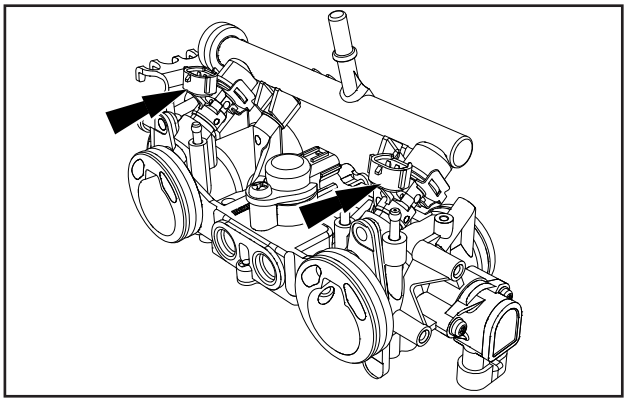

3. Fuel Supply Module

The inlet filter filters the minute dust particles and supplies fuel to the feed pump. The feed pump creates positive pressure in the fuel lines, pushing the gasoline to the injector. The benefit of placing the pump inside the tank is that it is less likely to start a fire. Though electrical components (such as a fuel pump) can spark and ignite fuel vapours, liquid fuel will not explode and therefore submerging the pump in the tank is one of the safest places to mount. The pressure regulator maintains a constant pressure of 350 kpa by returning the surplus fuel back into the tank.

Specification:

Operating Voltage: 8 to 16 V

Operating Fuel Pressure: 350 ± 2 kPa

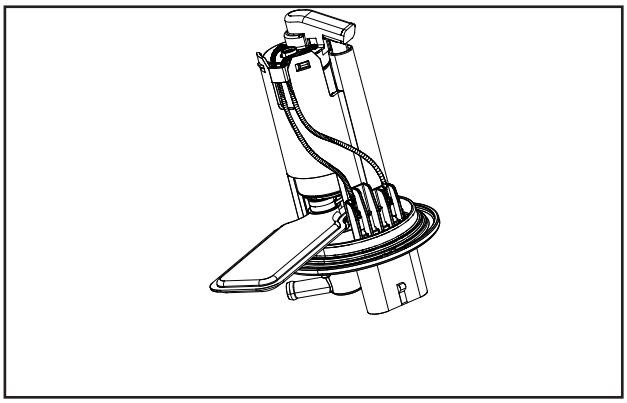

4. Throttle Position Sensor

A Throttle Position Sensor (Tps) is used to monitor the position of the throttle operation and is located on the butterfly spindle so that it can directly monitor the position of the throttle. The sensor is a potentiometer type and therefore provides a variable resistance depending upon the position of the butterfly valve and hence throttle position can be sensed by the ECU. The sensor signal is used by the ECU as an input to its control system. The ignition timing and fuel injection timing (and potentially other parameters) are altered depending upon the position of the throttle, and also depending on the rate of change of the position.

The ECU uses the throttle valve position to know:

- Engine mode: Idle, Part Throttle, Wide-Open Throttle.
- Air-fuel ratio correction.
- Acceleration/ Deceleration correction.

Specification:

Supply Voltage: 5 V

Total Resistance: 2000 ± 600 Ω (Across pins 126 & 207)

Voltage at idle: 0.7 ± 0.35 V

Voltage at WOT: 4.49 to 4.84 V

Note: To see signal, check Voltage across the pins 203 & 207

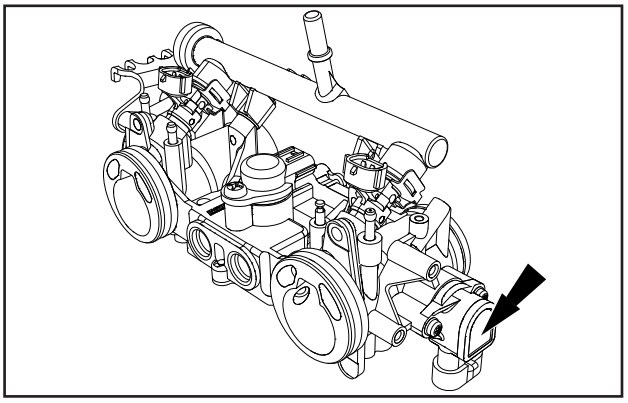

5. Manifold Absolute Pressure Sensor (MAP)

The Manifold Absolute Pressure sensor provides instantaneous manifold pressure information to the ECU. This is necessary to calculate air density to determine the required fuel metering for optimum combustion and influence the advance or retard of ignition timing. It is mounted under the fuel tank on frame.

Specification:

Supply Voltage: 5 V

Pressure Range: 10 to 115 kPa

Temperature Range: -40°C to 130°C

Note: To see signal, check Voltage across the pins 112 & 103

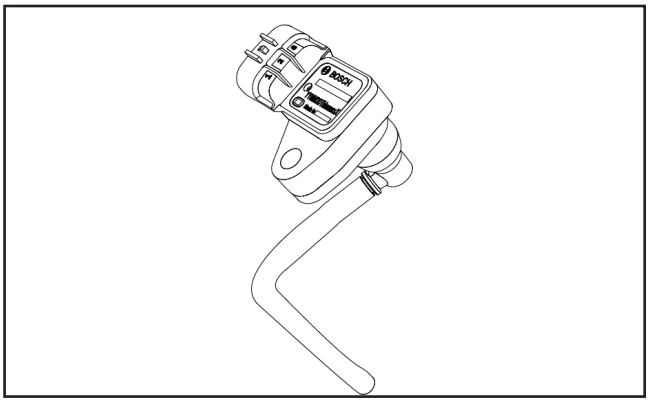

6. Canister Purge Valve

The purge valve is the part of the vehicle Evaporative Emission Control (EVAP) system. The EVAP system prevents fuel vapors in the fuel tank from escaping into the atmosphere. The EVAP system traps fuel vapors from the fuel tank and temporarily stores them in the charcoal canister, see the diagram. When the engine is running under certain conditions, the fuel vapors are purged from the canister and burned inside the engine. The purge valve precisely controls the amount of fuel vapor that is purged from the charcoal canister. It opens only when engine oil >75º c and HEGO sensor "Controller ON".

Specification:

Valve: Normally Closed

Resistance: 16 ± 2Ω @ 23 ± 5°C

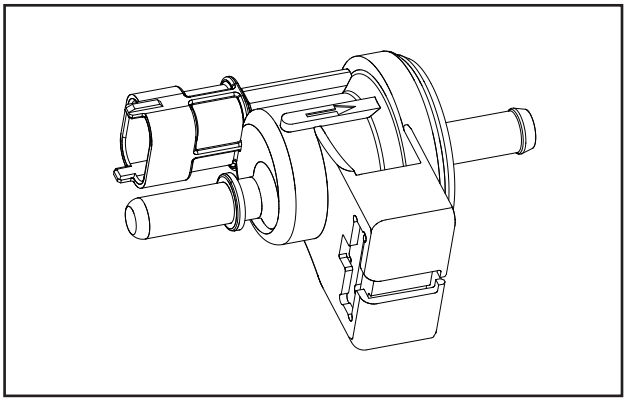

7. HEGO Sensor (HEGO / O2)

The Heated Exhaust Gas Oxygen sensor detects the presence of oxygen in the exhaust and produces a variable voltage according to the amount of oxygen detected. The O2 sensor provides feedback to the ECU indicating air/fuel ratio in order to achieve a near stoichiometric air/fuel ratio of 14.7 : 1 during closed loop engine operation. The ideal mixture is the amount of fuel needed to make an engine perform as commanded by the ECU.

The HEGO sensor is a voltage generator which is installed upstream from the catalytic converter. The heated exhaust gas oxygen sensor will generate a voltage signal that is characteristic of this ideal stoichiometric ratio. The HEGO sensor operates as a reference-gas sensor, and compares the residual oxygen in the exhaust gas with the oxygen in the reference atmosphere (air circulating inside the sensor). The active sensor ceramic is heated by the internal heating element; thus sensor heating reduces the influence of the exhaust gas temperature on the sensor-ceramic temperature and therefore the temperature-dependent sensor. Reliable signals working temperature from 300ºc to 900ºc maximum.

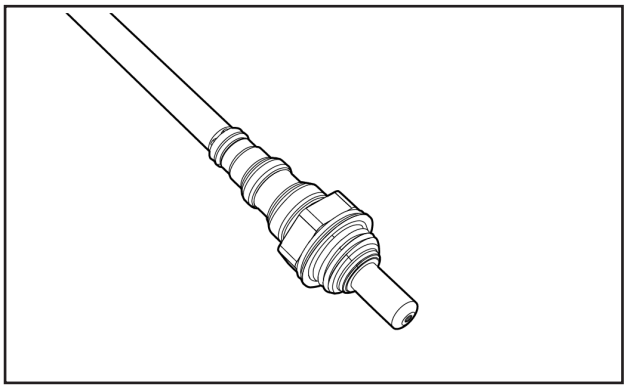

Specification:

Operating Voltage: 16 V (Max)

Operating temperature: 600ºC to 950ºC

8. Idle Air Control Valve (IAC)

Idle Air Control Valve is basically a stepper motor controlling the bypass air to the engine and helps to idle and cold start the engine without difficulties. The ECU accordingly collects the data from the engine oil temperature and intake air temperature sensors and operates the stepper motor in regulating the engine RPM. This allows the engine's idle speed to be maintained constant. It is mounted on throttle body.

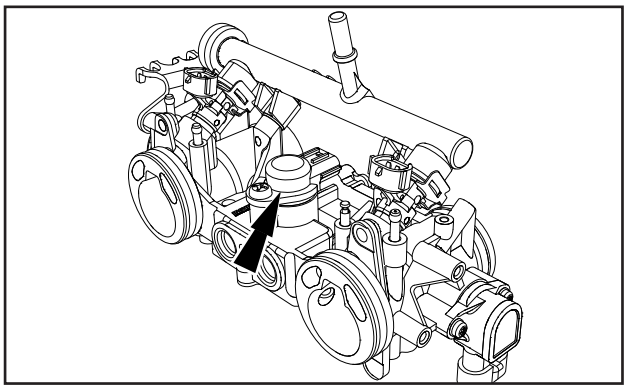

Specification:

Operating Voltage: 8 to 16 V

Working temperature - 10ºC

High altitude range - upto 5000 meter

NOTE: 1. To meet target emission

2. To meet evaporative emission.

9. Engine Oil Temperature Sensor (EOT)

Engine oil temperature sensor is thermistor whose resistance is dependent on temperature. It has a Negative Temperature Coefficient where the resistance decreases with increase in temperature. It gives the average temperature of the engine oil to the ECU for making corrections in the injection quantity, ignition timing and for adjusting the stepper opening for better idle stability. It is mounted in LH of cylinder head.

Specification:

Operating Temperature: -55 to 250°C

Supply Voltage: 5 V

Pin Out Voltage: 2.7734 V @ 39.6°C
(Across Pins 215 & 106)

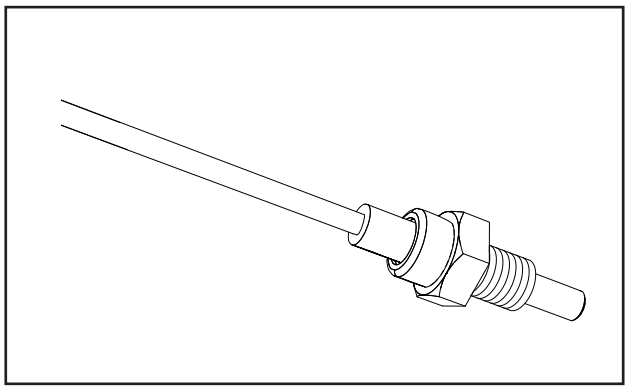

10. Intake Air Temperature Sensor (IAT)

Intake air temperature sensor is also a Negative Temperature Coefficient sensor where the resistance decreases with increase in temperature. It gives the information about ambient air temperature to the ECU for making corrections in the injection quantity and ignition timing. It is mounted on air filter box top right corner.

Specification:

Operating Temperature: -55 to 125°C

Supply Voltage: 5 V

Pin Out Voltage:1.777 V @ 39.8°C
(Across Pins 227 & 105)

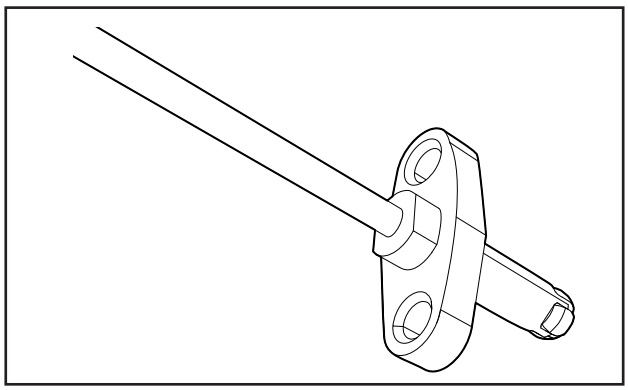

11. Clutch Switch

Clutch switch gives information to the ECU about the clutch status (i.e) engaged or disengaged with the gearbox. The clutch switch gives digital input to the ECU (i.e) 0 or 1 which will help in starting of the vehicle when the engine is not in neutral gear. It is mounted under the LH switch module at handle bar.

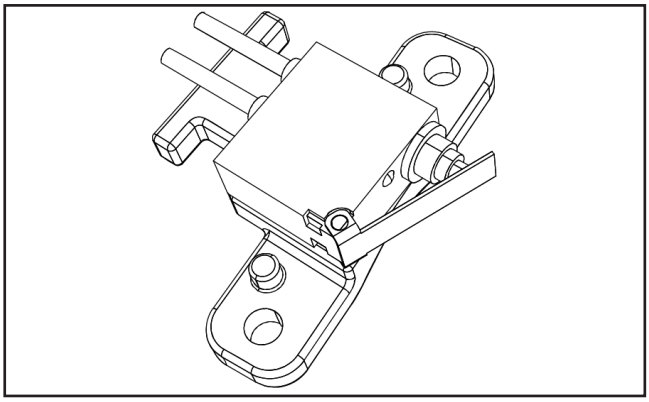

12. Side Stand Switch

Side stand switch prevents the vehicle from starting when the side stand is down and not in neutral gear.
It is HALL - IC type switch, which is directly connected to ECU.

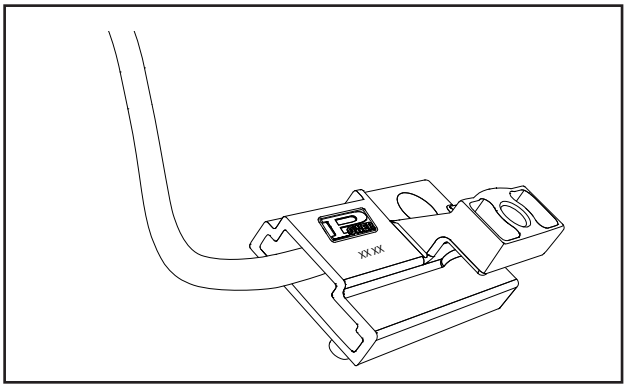

Specification:

(Across Pins 226 & 208)

Side stand down: 2.80 to 4.05 V

Side stand up: 0.35 to 1.15 V

13. Gear Position Sensor (GPS)

Gear Position Sensor indicates the ECU, the gear in which the vehicle is operated at that instant. The input is also required for drive ability calculations in the ECU.
During neutral gear position a light will glow in instrument cluster.
Operating temperature: -25°c to +150°c

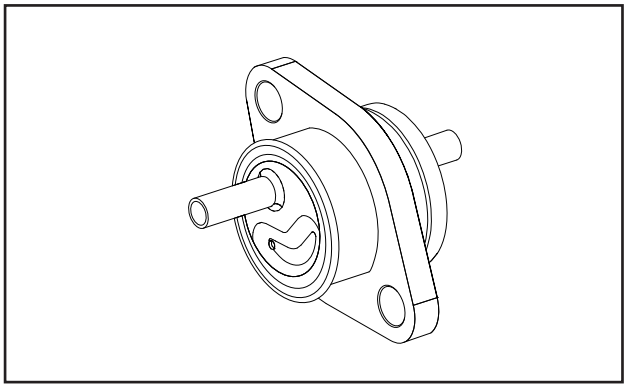

Specification:

(Across Pins 123 & 208)

Neutral gear: 0.37 to 1.16 V

14. Roll Over Sensor

Roll over sensor is also known as bank angle sensor. This sensor gives signal to the ECU if the vehicle rolls off during any mishap or accident. The ECU then cuts off the supply to the fuel injector and the spark plug thus stalling the vehicle, due to which further major mishap is avoided. It is mounted under the seat on the vehicle above battery box.

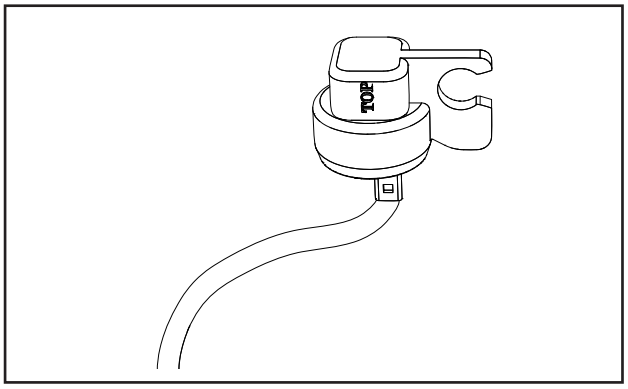

Specification:

(Across Pins 225 & 114)

Voltage when vehicle is upright: 0.36 to 1.5 V

Voltage during a fall: 3.75 to 4.35 V

Banking angle: 45 degrees

15. Crank Position Sensor (CPS)

It provides an alternating electrical pulse to the ECU, to determine crankshaft speed and TDC position of the piston in compression stroke. This input will help the ECU to optimize both fuel injection as well as Ignition advance required to suit the crankshaft rotation speed (RPM).
In the event throttle is wide open, leading to crankshaft speed above 5500 RPM, the high frequency electrical pulses from the crank position sensor will prompt the ECU to restrict fuel supply so that the crank speed reduces to safe levels. This is a safety aspect to prevent damage to moving engine parts. CPS is located inside the engine cover LH, under the stator coil.

Specification:

Output Voltage: 3 - 5 V AC

Resistance : 215Ω ± 10Ω

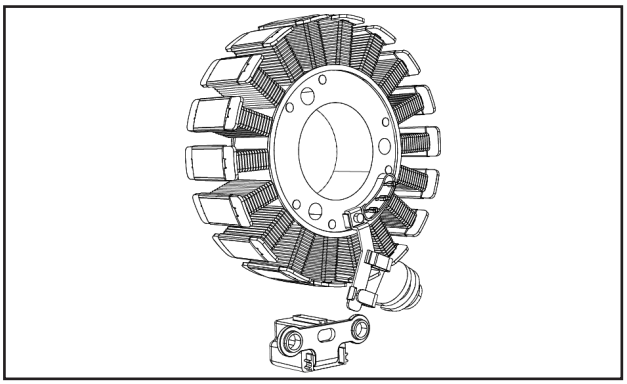

16. Starter Motor Relay

The starter motor is activated by a solenoid, whenever the starter button is depressed to start the engine.

While cranking, when the crank speed attains 600 RPM the ECU commands the starter solenoid to disconnect the power supply to the starter motor so that is will stop spinning.

Also in case the engine does not start within 15 seconds of depressing the starter button, the solenoid will disconnect power supply to the starter motor and will reset to normal condition only after the starter switch is released and after a time delay of about 5 seconds and Crank is at Zero RPM

This is a safety feature to safeguard the starter motor, solenoid and the starter clutch.

Specification:

Operating Voltage: 8 to 16 V

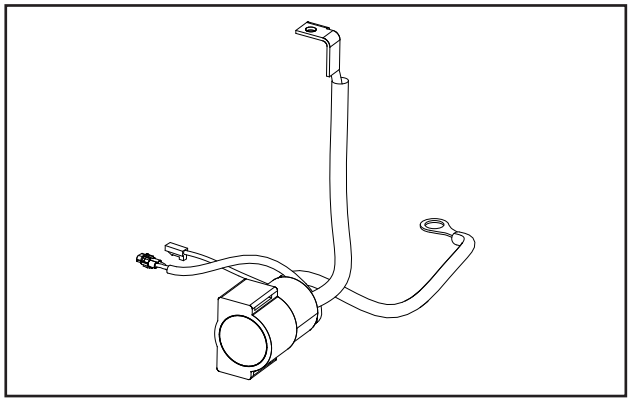

10.1 Engine Management System (EMS)

Dismantling

10.1.1. Engine Control Unit (ECU)

⚠ CAUTION

Before disconnecting ECU from the wiring harness, the battery terminals must be disconnected from the battery.

- Ensure the ignition switch and stop switch are in OFF position.
- Remove the Side panel RH.
- Disconnect battery terminals.
- Disconnect ECU connector **(a)**.

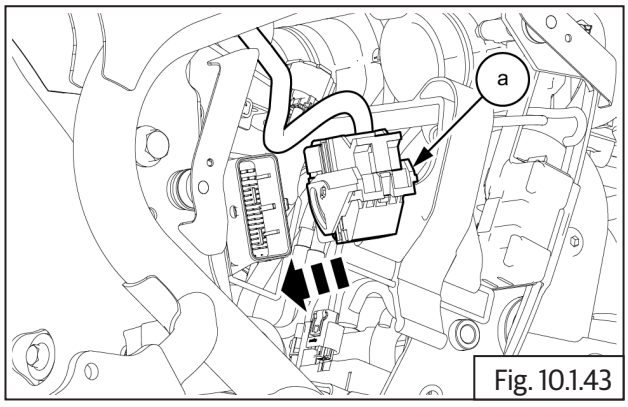

Fig. 10.1.43

- Remove the 2Nos torx screw **(a)** with retaining plate from ECU.

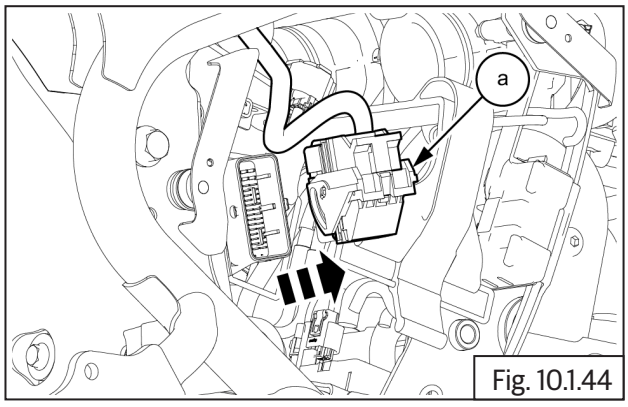

Fig. 10.1.44

	20 mm Torx socket with Ratchet

- Remove the ECU **(a)** from chassis frame.

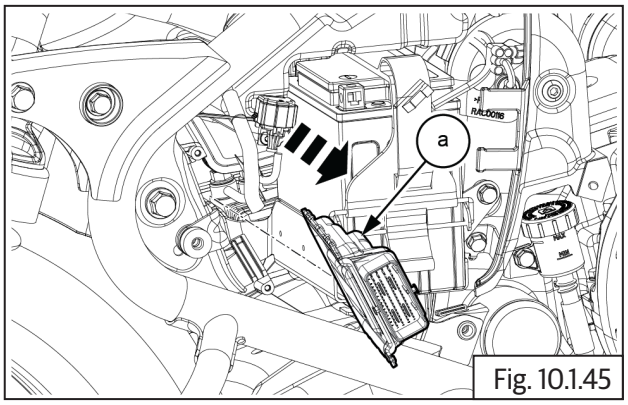

Fig. 10.1.45

⚠ CAUTION

Ensure locks are fully lifted up and released before disconnecting wiring connectors from ECU.

Ensure locks are handled with care and do not get damaged or broken.

Damaged or broken locks will result in loose connections and cause the ECU to fail.

Storage of ECU

Do's & Don'ts

- Store ECU away from any magnetic forces at it will affect the ECU program software and damage ECU.
- Store ECU in a cool and dry place.
- DO NOT allow moisture to affect the ECU.
- DO NOT wash the ECU with water or any solvent.
- Prevent ECU from any external damages.
- DO NOT drop ECU or allow it to fall as internals will get damaged and render the ECU defective.
- DO NOT keep any heavy or sharp objects on ECU as it will damage internals and render the ECU defective.

10.1.2. Fuel Pump

- Ensure Ignition switch and Engine stop switch are in OFF position.
- Remove the Side panel RH.
- Remove the Rider seat.
- Remove the Fuel tank assembly.

⚠ CAUTION

- **Ensure the following:**
- **Fuel is drained completely from fuel tank.**
- **Fuel feed and return hoses are disconnected from the fuel rail.**
- **Wiring couplers to fuel pump and low fuel sensor are disconnected.**
- **EVAP hose pipes are disconnected.**

⚠ WARNING

Gasoline is extremely flammable and highly explosive. Improper handling can lead to fatal accident or serious injury.

- Loosen and remove 8 Nos. Hex socket head bolts **(M5) (a)** holding fuel pump **(b)** to tank **(c)**.

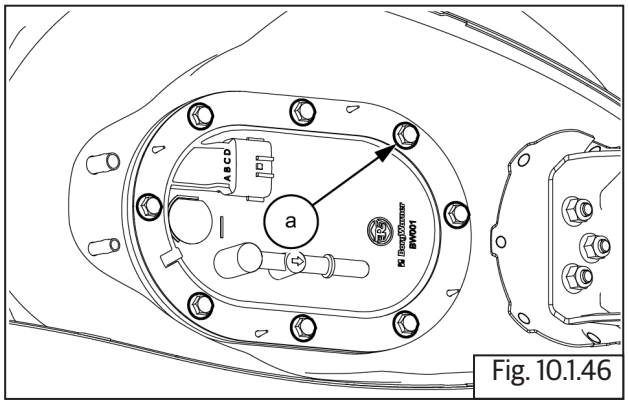

Fig. 10.1.46

	10 mm Socket with Ratchet

- Gently pull out the fuel pump **(a)** from fuel tank **(b)**.

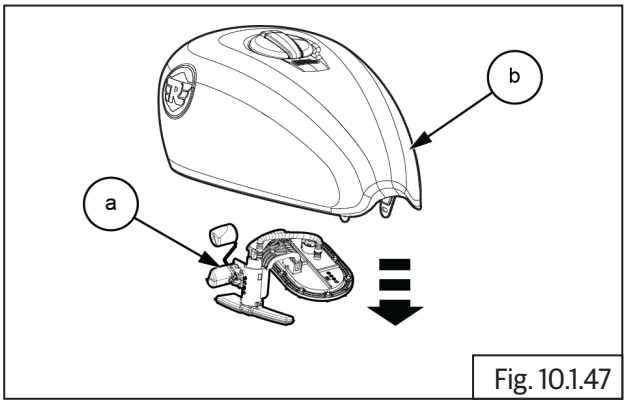

Fig. 10.1.47

- Remove plate **(a)** and O-rings **(b)** from fuel pump.

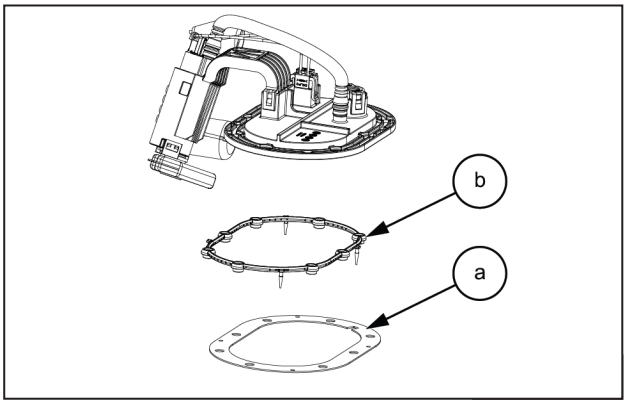

10.1.3.Manifold Absolute Pressure Sensor (MAP)

- Ensure ignition switch and engine stop switch are in OFF position.
- Remove the Side panel RH.
- Remove the Rider seat.
- Remove the Fuel tank assembly.

⚠ CAUTION

Ensure the following:

Fuel is drained completely from fuel tank.

Fuel feed and return hoses are disconnected from the fuel rail.

Wiring couplers to fuel pump and low fuel sensor are disconnected.

EVAP hose pipes are disconnected.

⚠ WARNING

Gasoline is extremely flammable and highly explosive. Improper handling can lead to fatal accident or serious injury.

- Remove throttle body cover from the LH side.
- Disconnect MAP sensor vacuum hose **(a)**

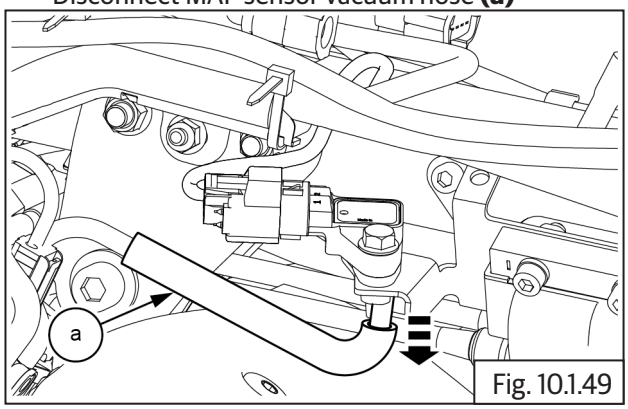

Fig. 10.1.49

- The MAP sensor **(a)** is fixed to the ignition coil bracket.
- Push lock and release wiring harness connector **(a)** from MAP sensor connector.

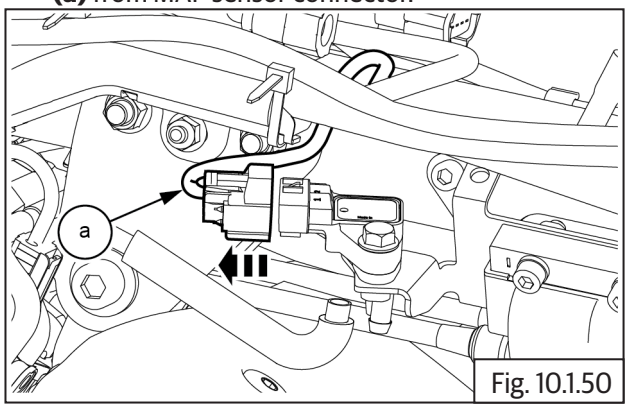

Fig. 10.1.50

- Loosen and remove Hex socket head bolt **(M6) (a)** from MAP sensor bracket.

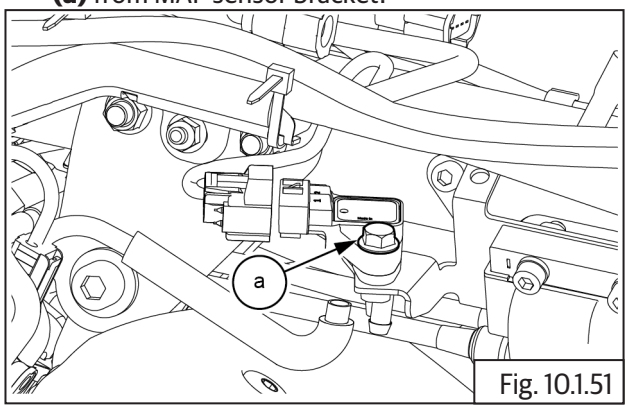

Fig. 10.1.51

	10mm socket with Ratchet

10.1.4. Throttle Body Assembly

- Ensure ignition switch and engine stop switch are in OFF position.
- Remove the Side panel RH.
- Remove the Rider seat.
- Remove the Fuel tank assembly.

⚠ CAUTION

- **Ensure the following:**
- **Fuel is drained completely from fuel tank.**
- **Fuel feed and return hoses are disconnected from the fuel rail.**
- **Wiring couplers to fuel pump and low fuel sensor are disconnected.**
- **EVAP hose pipes are disconnected.**

⚠ WARNING

Gasoline is extremely flammable and highly explosive. Improper handling can lead to fatal accident or serious injury.

- Remove the Throttle body cover LH and RH.
- Remove the Throttle cable.
- Remove electrical connectors from TPS, idle speed control stepper motor and fuel injectors LH and RH.
- Remove Rubber hoses connecting to Throttle body from EVAP.
- Ensure vacuum hose and MAP sensor are removed from throttle body.
- Loosen wire clips on LH and RH air filter connection tubes.
- Loosen worm clip screw on inlet manifold on Cylinder (LH).
- Loosen worm clip screw on inlet manifold on Cylinder (RH).

NOTE
• *Ensure both screws are sufficiently loosened and the worm clips rotates easily in the groove in the manifolds.*

- Gently pull out throttle body from the inlet manifold rubbers along with fuel rail and injectors.

10.1.5. Throttle Position sensor (TPS)

- The TPS is located on left side of throttle body and should **NOT BE REMOVED** from the throttle body under any circumstances.
- In case of any defect in the TPS, complete throttle body assembly should be replaced.

⚠ CAUTION
Do not disturb the TPS sensor (a) fixing screws or the throttle rotor setting screw as it will affect the EMS settings and the engine performance.

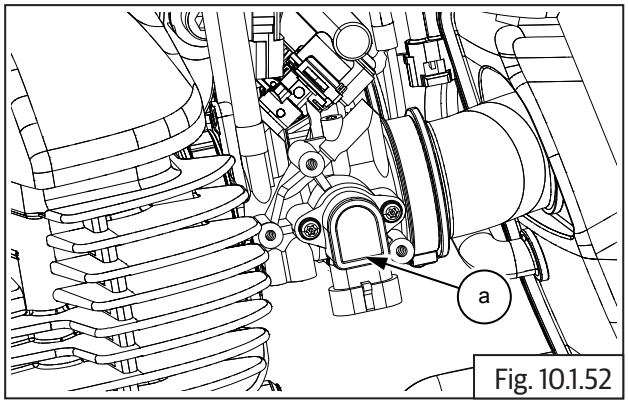

Fig. 10.1.52

10.1.6. Fuel Injectors

- Remove throttle body assembly.
- Loosen and remove 2 Nos. button head screws **(a)** holding from fuel injector rail **(b)** to throttle body.

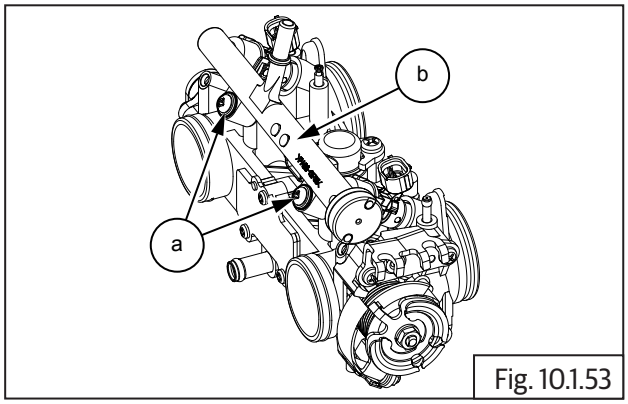

Fig. 10.1.53

	Screw driver (+)

- Gently remove fuel rail **(a)** along with injectors **(b)** from throttle body.

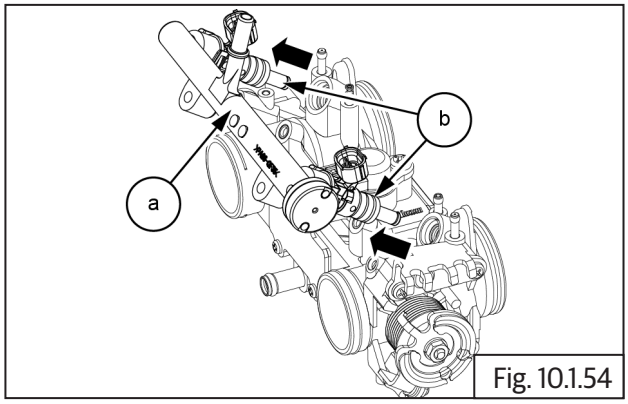

Fig. 10.1.54

- Gently release and remove lock clips **(a)** that secure injectors **(b)** to injector rail **(c)**.

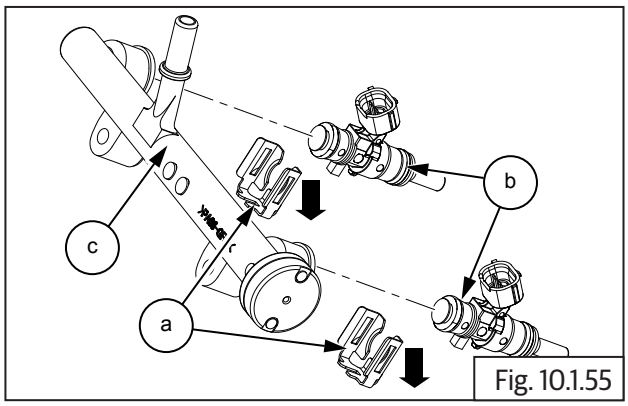

Fig. 10.1.55

- Gently remove injectors from fuel rail along with O-rings upper **(a)** and lower **(b)**.

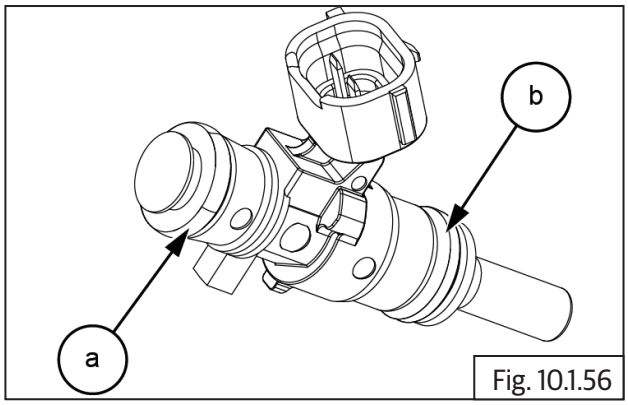

Fig. 10.1.56

10.1.7. Idle Speed Control (ISC)

- Remove throttle body.
- The ISC motor is located on top of throttle body.
- Loosen and remove button head screw **(a)** from ISC stepper motor **(b)**.

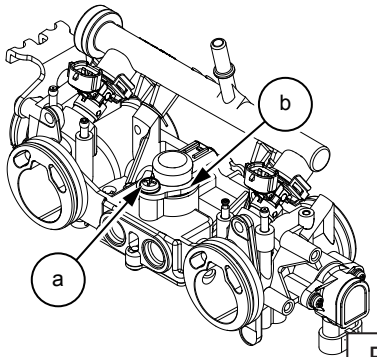

Fig. 10.1.57

	Phillips screw driver (+)

⚠ CAUTION

The spring is loaded hence remove screw with care.

- Gently pull out and remove ISC stepper motor **(a)** along with O-ring **(b)** and spring **(c)** from throttle body **(d)**.

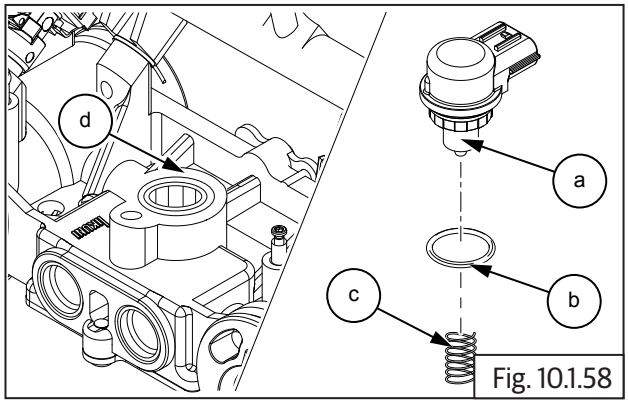

Fig. 10.1.58

10.1.8. Engine Oil Temperature Sensor (EOT)

- Remove throttle body.
- The EOT **(a)** is located on the LH side cylinder head below the throttle body.

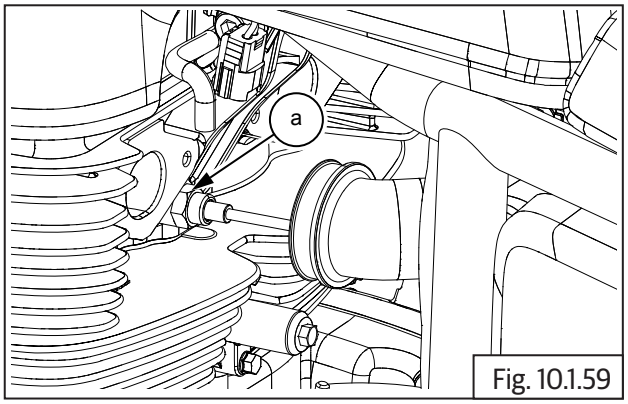

Fig. 10.1.59

NOTE

- *Ensure the engine is cold before dismantling EOT.*
- *Ensure Ignition switch and Engine stop switch are in OFF position.*

⚠ CAUTION

Do not remove EOT from cylinder head when the engine is hot.

- Remove throttle body cover LH.
- Disconnect EOT sensor wiring coupler **(a)** from the main harness **(b)** above throttle body.

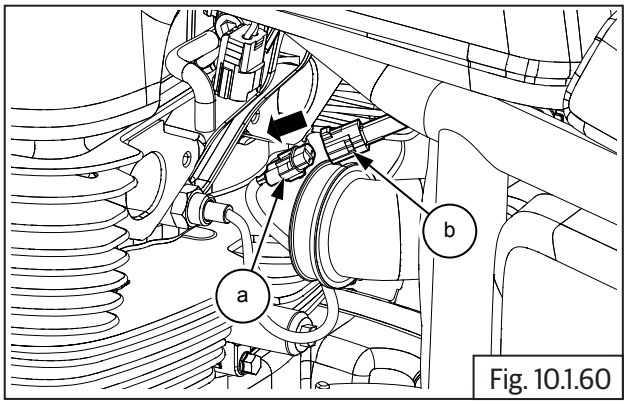

Fig. 10.1.60

- Place a small tray under EOT to collect the oil when it is loosened and removed.
- Insert EOT wiring coupler through a deep grooved ring spanner and locate the spanner on the EOT hex head correctly.
- Gently loosen EOT **(a)** from cylinder head **(b)** and remove along with O-ring **(c)**.

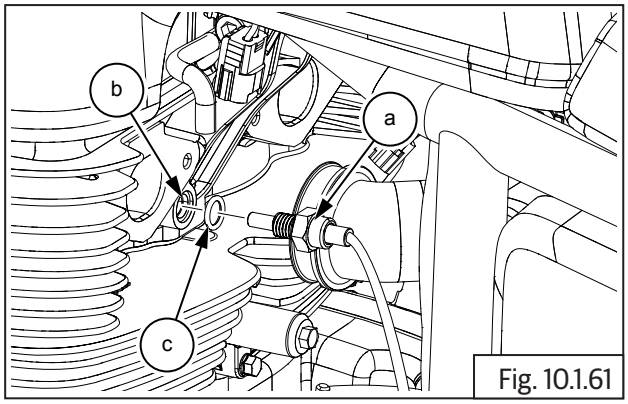

Fig. 10.1.61

	17 mm Deep groove ring spanner

10.1.9. HEGO (O2) Sensor

⚠ CAUTION

Do not loosen/remove HEGO (O2) sensors when the exhaust pipes are hot.

⚠ WARNING

The engine and exhaust systems get extremely hot during normal operation and can result in serious burns if touched. Make sure exhaust pipes are not hot and is at the same levels of ambient/surrounding temperature whenever working on the engine or exhaust systems.

- The HEGO (O2) sensor **(a)** are located on the exhaust pipes **(b)** near the cylinder head RH.

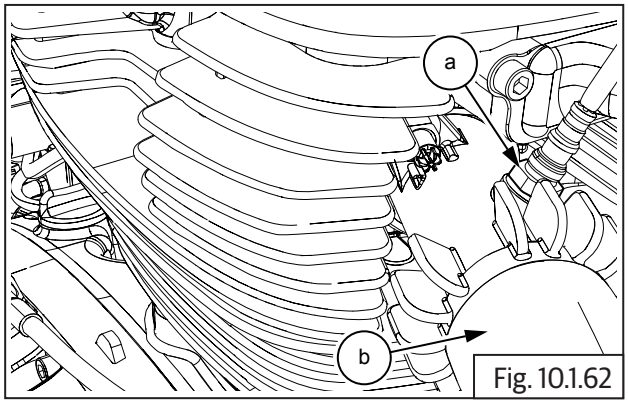

Fig. 10.1.62

- The HEGO (O2) sensor **(a)** are located on the exhaust pipes **(b)** near the cylinder head LH.

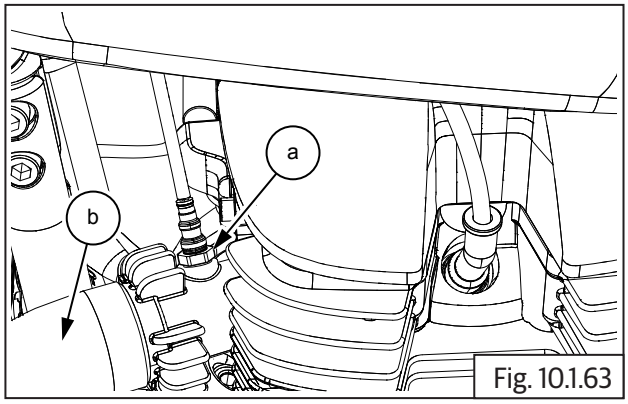

Fig. 10.1.63

- Disconnect horn terminal couplers from the horns **(a)** .

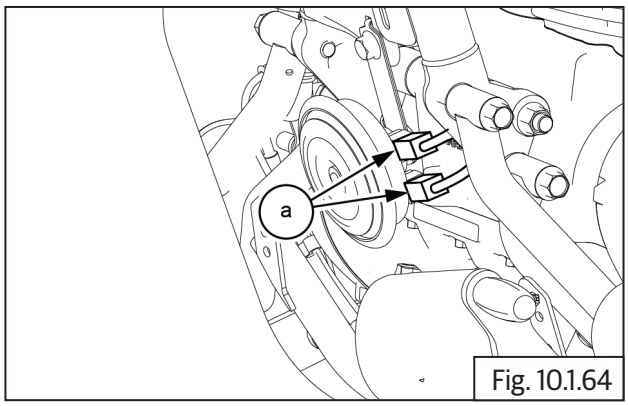

Fig. 10.1.64

- Loosen and remove horn mounting bolts and remove horns from frame.
- Disconnect HEGO (O2) sensor LH and RH sensor connectors **(a)** from wiring harness located front of the engine**.**

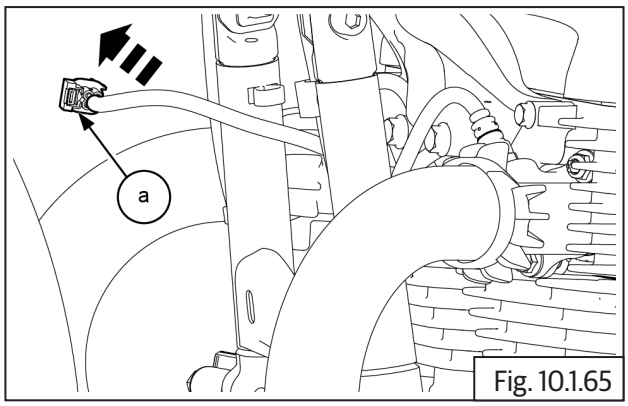

Fig. 10.1.65

- Insert the HEGO (O2) sensor LH wiring coupler through a deep grooved ring spanner and locate the spanner on the sensor hex head correctly.
- Gently loosen LH HEGO (O2) sensor **(a)** from exhaust pipe **(b)** LH and remove along with Copper washer.

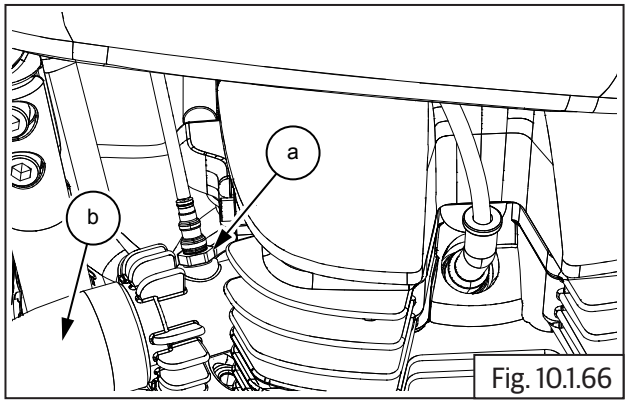

Fig. 10.1.66

	17 mm Double end spanner/Deep groove spanner
Torque	18 N-m / 1.8 kgf-m

- Repeat process to remove RH HEGO (O2) sensor **(a)** from the RH exhaust pipe **(b)**.

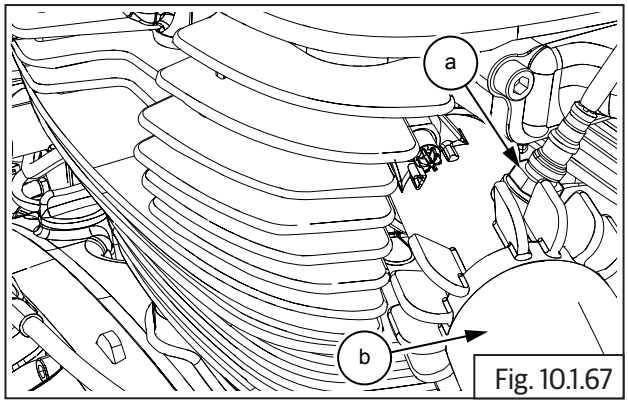

Fig. 10.1.67

	17 mm Double end spanner/Deep groove spanner
Torque	18 N-m / 1.8 kgf-m

10.1.10. Intake Air Temperature (IAT)

- The IAT **(a)** assembled in the front RH side of the air filter housing.

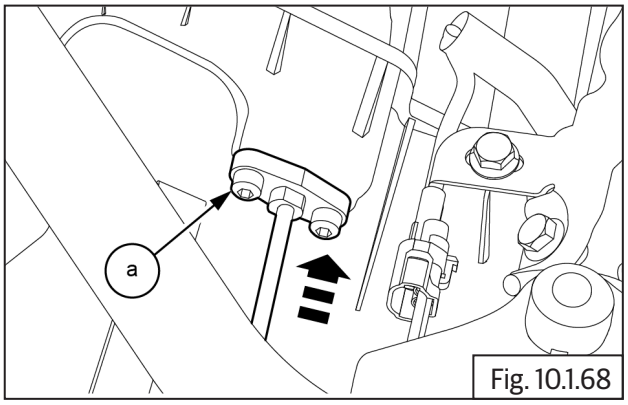

Fig. 10.1.68

- Ensure ignition switch and engine stop switch are in "OFF" position.
- Remove the Side panel LH.
- Remove the Rider seat.
- Remove the Side panel LH.
- Remove the Pillion seat.

⚠ CAUTION

Ensure the following:

Fuel is drained completely from fuel tank.

Fuel feed and return hoses are disconnected from the fuel rail.

Wiring couplers to fuel pump and low fuel sensor are disconnected.

⚠ WARNING

Gasoline is extremely flammable and highly explosive. Improper handling can lead to fatal accident or serious injury.

- Disconnect intake air temperature sensor wiring coupler **(a)**.

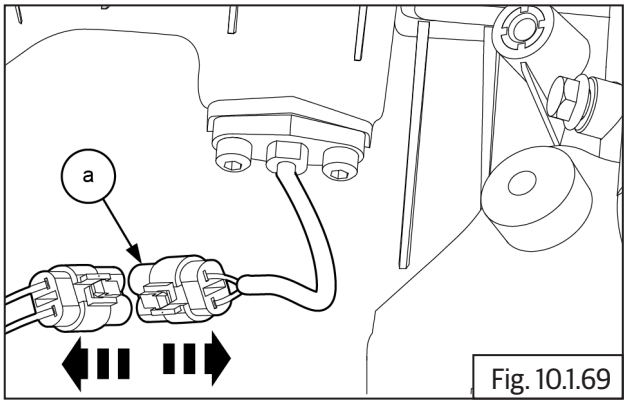

Fig. 10.1.69

- Loosen and remove 2 Nos. Hex socket head bolts **(M5) (a)** holding intake air temperature (IAT) sensor to air filter box assembly on the LH side.

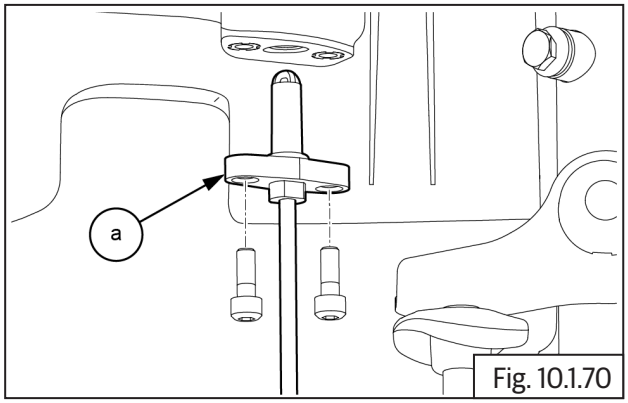

Fig. 10.1.70

	4 mm Allen Socket with Ratchet

- Gently pull out intake air temperature sensor **(a)** from air filter box assembly.

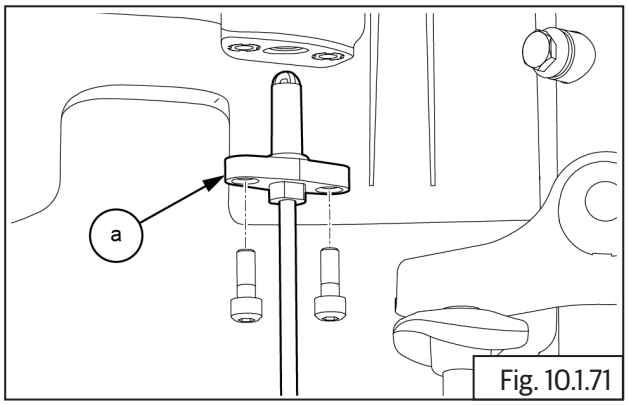

Fig. 10.1.71

10.1.11. Purge Valve

- Remove the Throttle Body Cover.
- Remove the RH Infill Panel.
- Remove the LH Infill Panel.
- Remove the Pillion Seat.
- Remove the Battery from Frame.
- Remove the Charcoal Canister.

- Disconnect electrical connector **(a)** from purge valve .

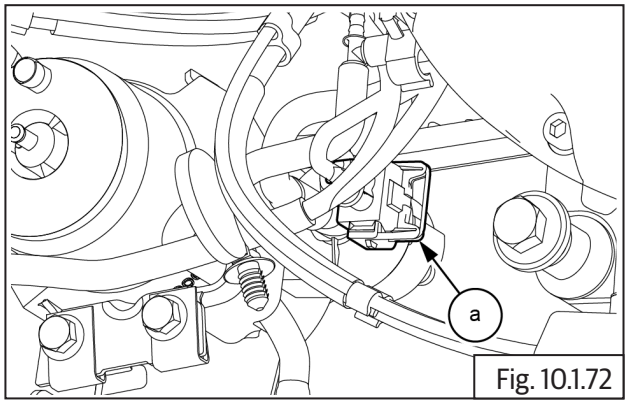

Fig. 10.1.72

- Disconnect out put hose **(a)** from purge valve .

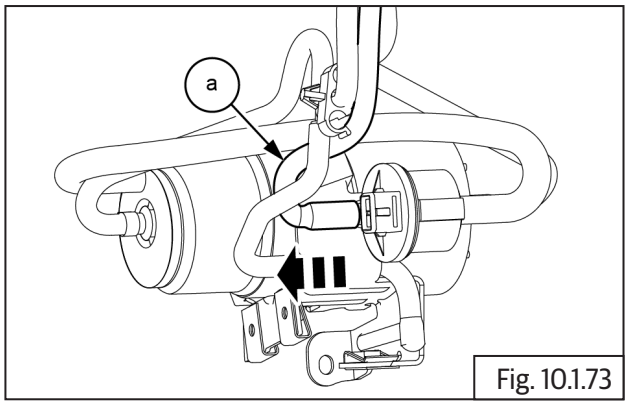

Fig. 10.1.73

- Disconnect input hose **(a)** from purge valve .

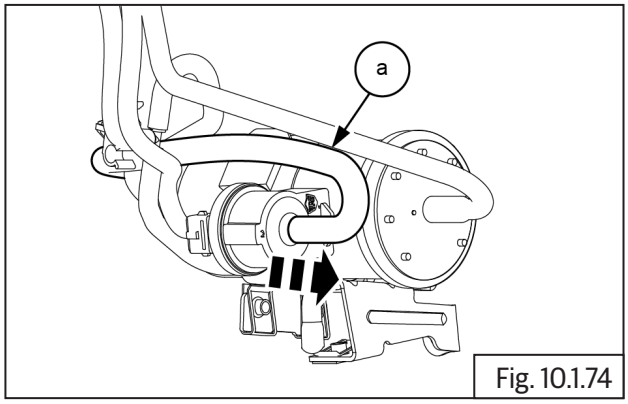

Fig. 10.1.74

- Slide and remove the purge valve with rubber boot **(a)** from bracket.

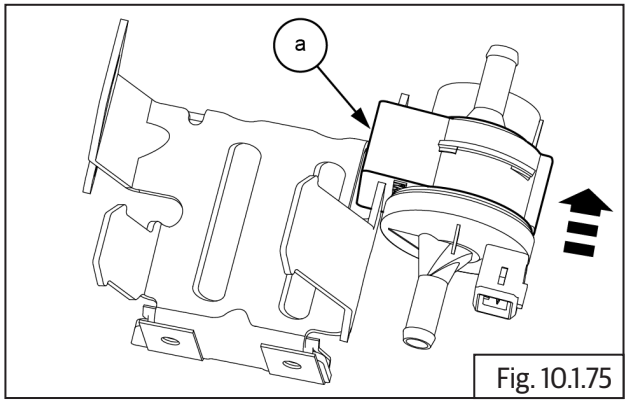

Fig. 10.1.75

- Remove the purge valve **(a)** from rubber boot.

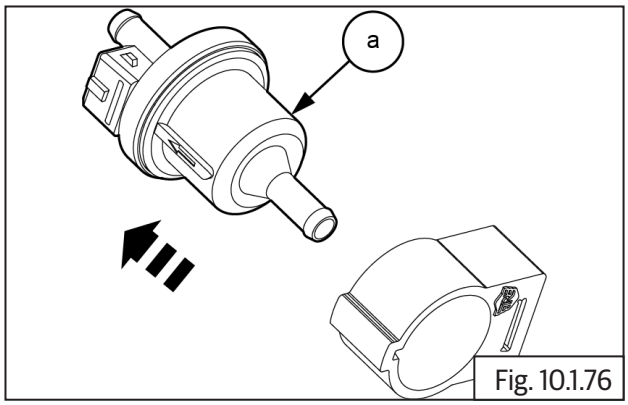

Fig. 10.1.76

10.1.12. Roll Over Sensor

- Remove the Pillion seat.
- Remove the Rider seat.
- Disconnect roll over sensor connector **(a)**.

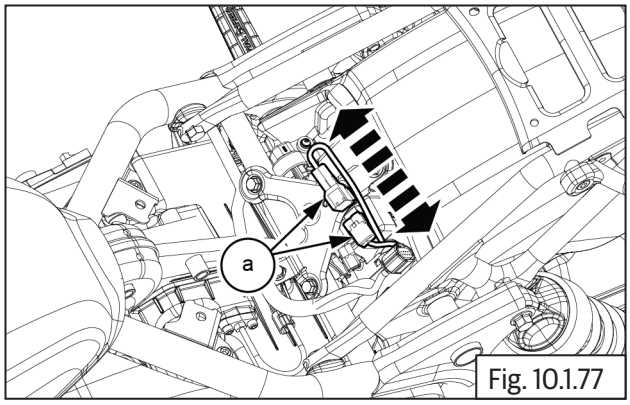

Fig. 10.1.77

- Remove the roll over sensor by removing screw **(a)**

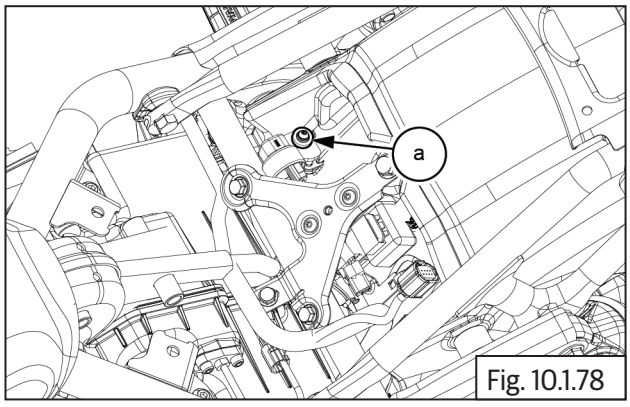

Fig. 10.1.78

	20 mm Torx socket with Ratchet

10.1.13. Ignition Coil

- The Ignition coil is located on the bottom of the frame.

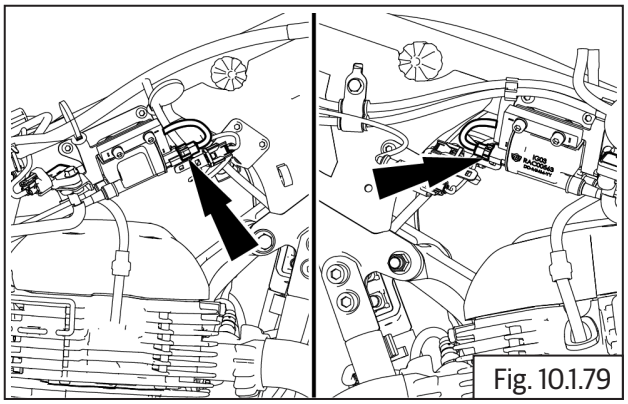
Fig. 10.1.79

- Ensure Ignition switch and Engine stop switch are in "OFF" position.
- Remove the Rider seat.
- Remove the Fuel Tank.

⚠ CAUTION

- **Ensure the following:**
- **Fuel is drained completely from fuel tank.**
- **Fuel feed and return hoses are disconnected from the fuel rail.**
- **Wiring couplers to fuel pump and low fuel sensor are disconnected.**

⚠ WARNING

Gasoline is extremely flammable and highly explosive. Improper handling can lead to fatal accident or serious injury.

- Disconnect spark plug caps from the LH spark plug **(a)**.

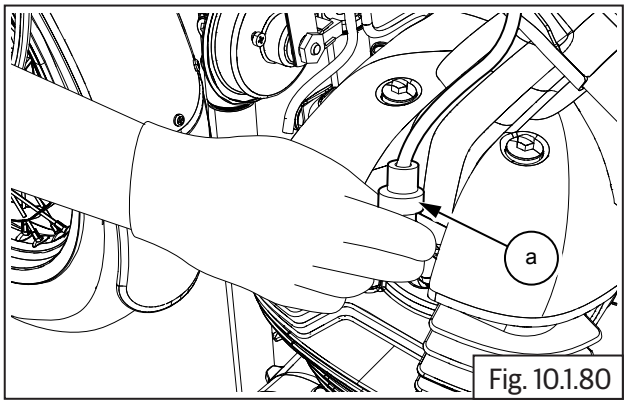

Fig. 10.1.80

- Disconnect RH spark plug cap **(a)** from the engine **(b)**.

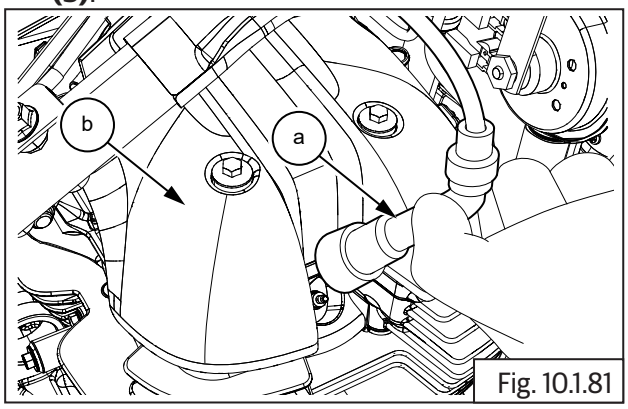

Fig. 10.1.81

- Disconnect wiring couplers **(a)** from the ignition coil on both LH and RH sides.

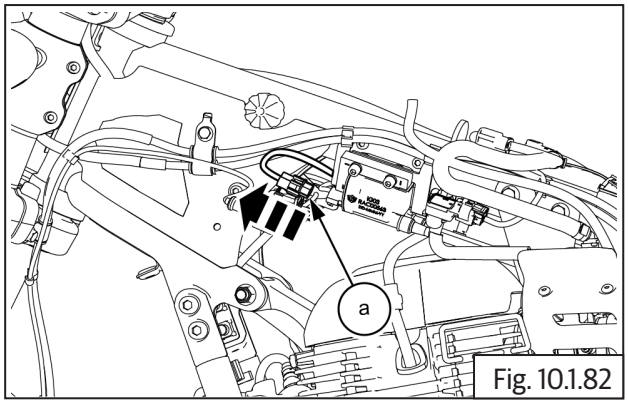

Fig. 10.1.82

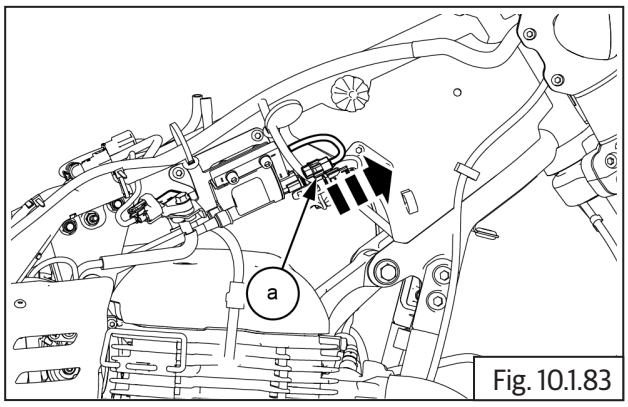

Fig. 10.1.83

- Detach the clips **(a)** from LH side ABS hoses.

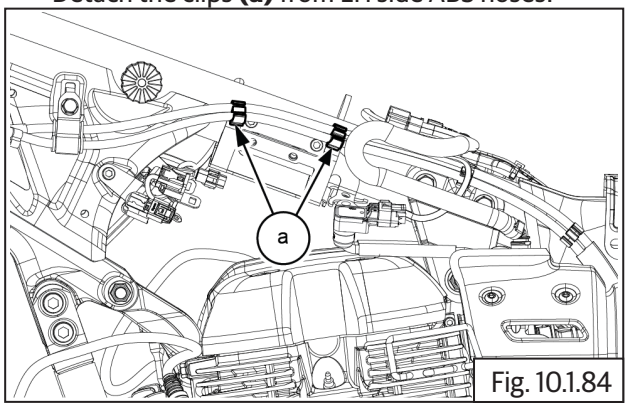

Fig. 10.1.84

	Screw driver

- Remove the wire tags **(a)** from RH side ignition coil bracket.

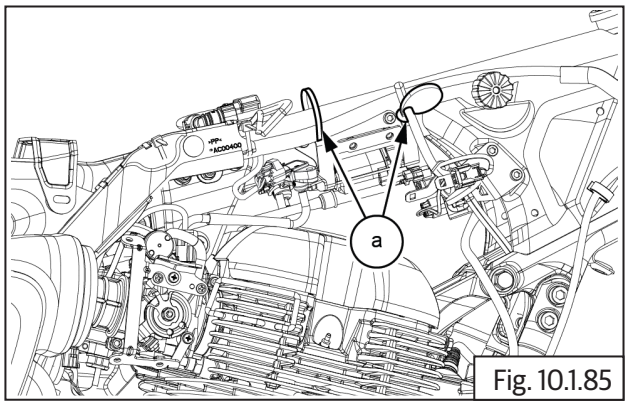

Fig. 10.1.85

	Screw driver

- Loosen and remove. cap bolts 4 Nos **(M6) (a)** with washers 4 Nos from LHS and RHS ignition coil.

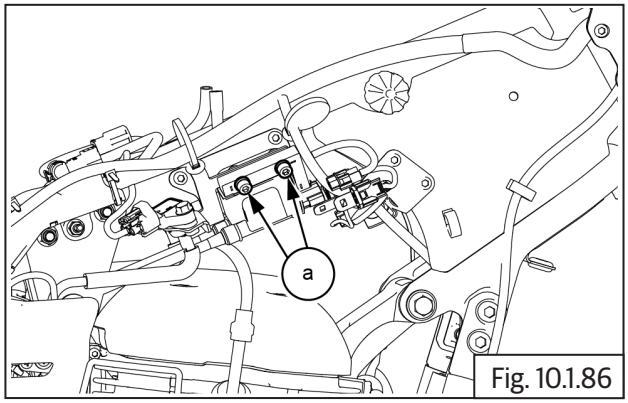

Fig. 10.1.86

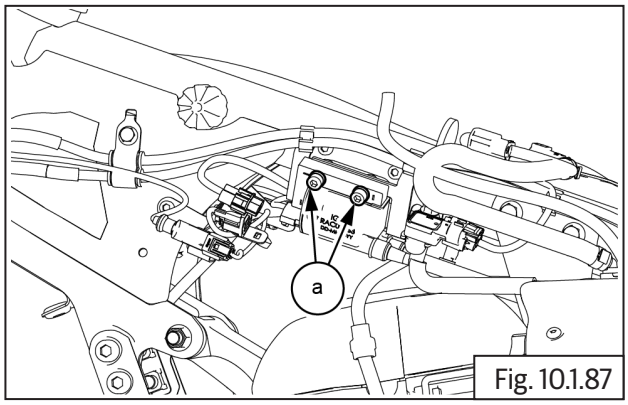

Fig. 10.1.87

	5 mm Allen socket with Ratchet

- Remove LHS and RHS Ignition coil **(a)** from frame and remove along with HT cables .

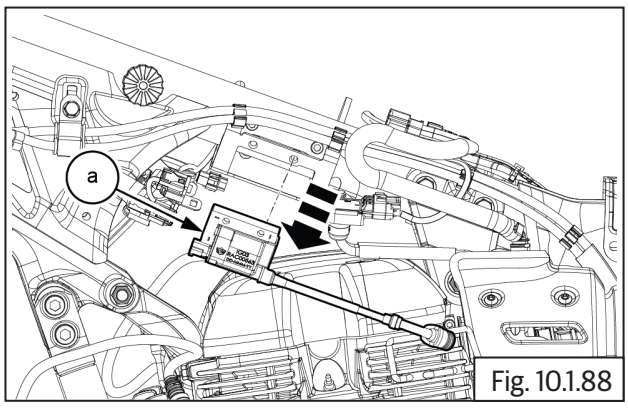

Fig. 10.1.88

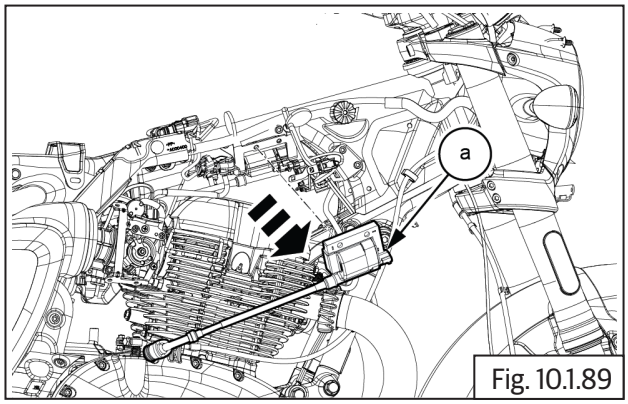

Fig. 10.1.89

10.1.14. Ignition Coil LH and RH from bracket

- Loosen and remove. cap bolts 4 Nos **(M6) (a)** with washers from LHS and RHS ignition coil bracket .

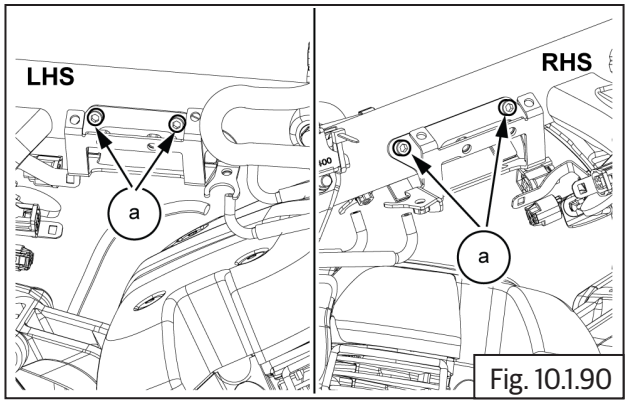

Fig. 10.1.90

	5 mm Allen socket with Ratchet

- Remove ignition coil bracket **(a)** from chassis frame.

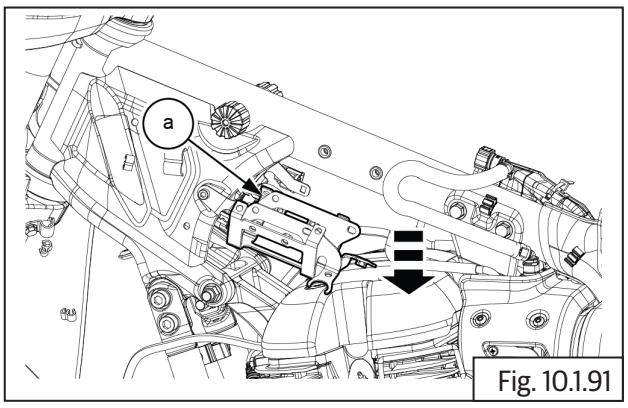

Fig. 10.1.91

10.1.1.5 Crank Position Sensor

- The crank position sensor **(a)** is located inside the engine cover LH and attached to the stator coil.

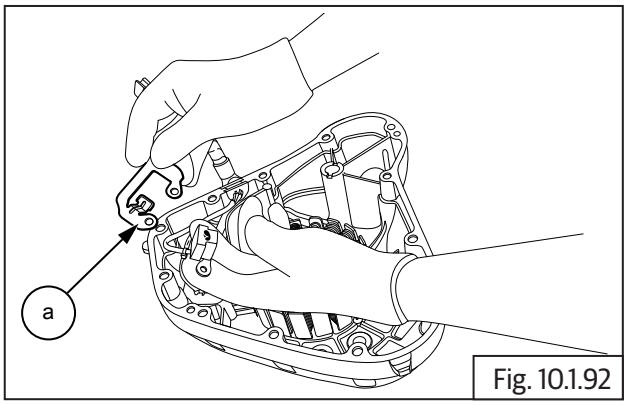

Fig. 10.1.92

- Ensure Ignition switch and Engine stop switch are in "OFF" position.
- Drain engine oil.
- Disconnect wiring coupler **(a)** of stator from main wiring harness **(b)**.

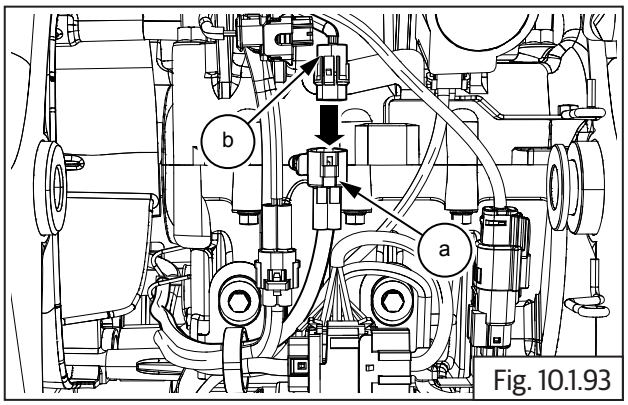

Fig. 10.1.93

- Remove FD sprocket cover.
- Remove cover LH from Engine.
- Loosen and remove 3 Nos. Hex socket head screws **(M6) (a)** holding stator coil **(b)**.

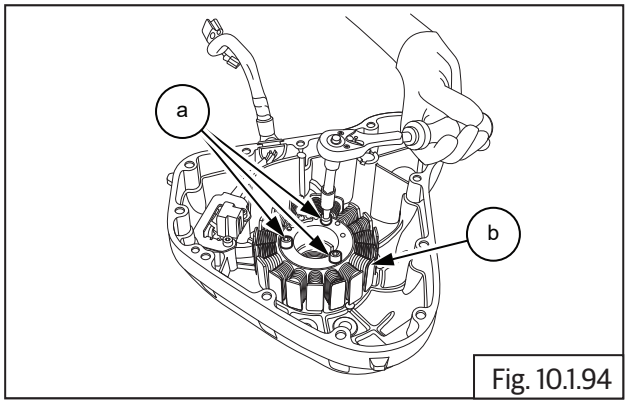

Fig. 10.1.94

	5 mm Socket with Ratchet

- Loosen and remove 2 Nos. Hex socket head bolts **(M5) (a)** holding crankshaft position sensor guide plate **(b)** to cover LH.

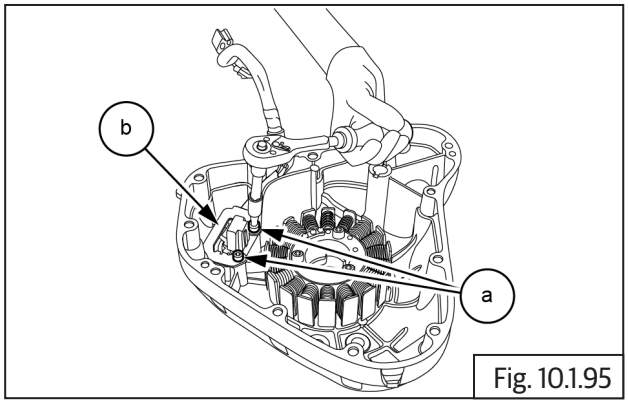

Fig. 10.1.95

	4 mm Socket with Ratchet

- Remove guide plate **(a)** from LH cover.

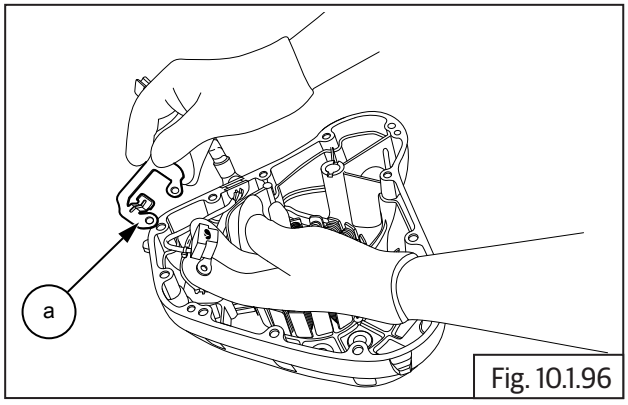

Fig. 10.1.96

- Gently slide out wiring harness, rubber grommet **(a)** from the slot in cover LH and remove stator coil along with crank shaft position sensor **(b)**.

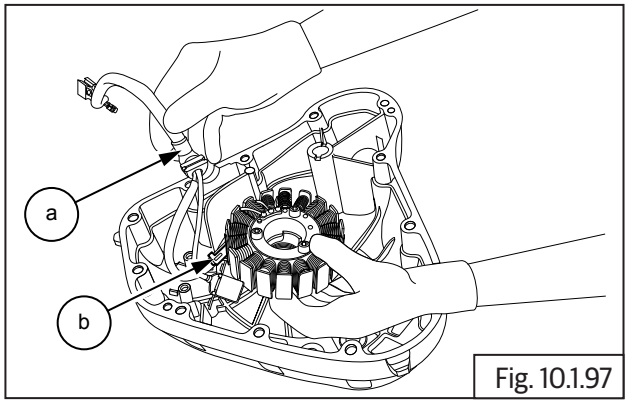

Fig. 10.1.97

10.1.16. Gear Position Sensor

- The gear position sensor **(a)** is located on the crankcase LH before FD sprocket.

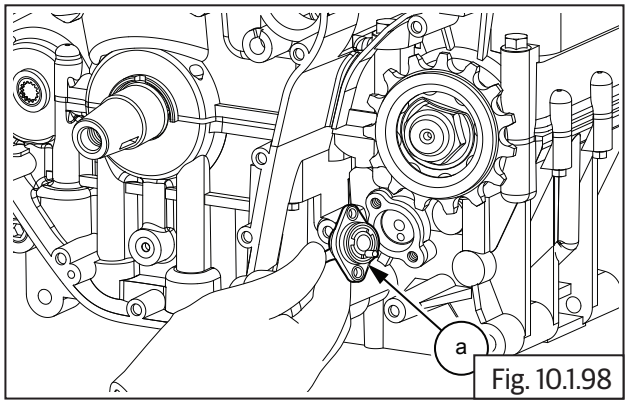

Fig. 10.1.98

- Ensure Ignition switch and engine stop switch are in OFF position.
- Disconnect wiring coupler **(a)** of gear position sensor from main wiring harness **(b)**.

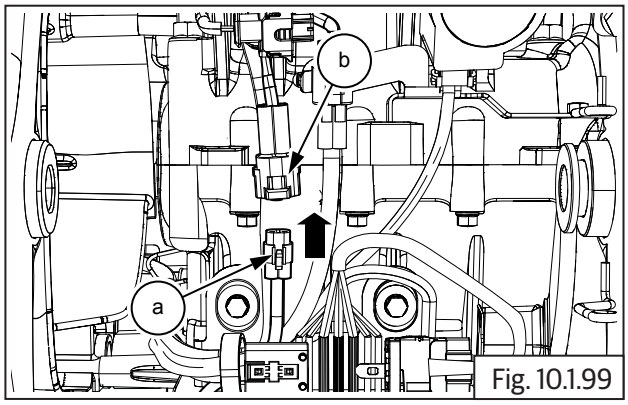

Fig. 10.1.99

- Remove FD sprocket cover.
- Loosen and remove 2 Nos. Hex head bolts **(M6) (a)** holding the gear position sensor to crankcase LH **(b)**.

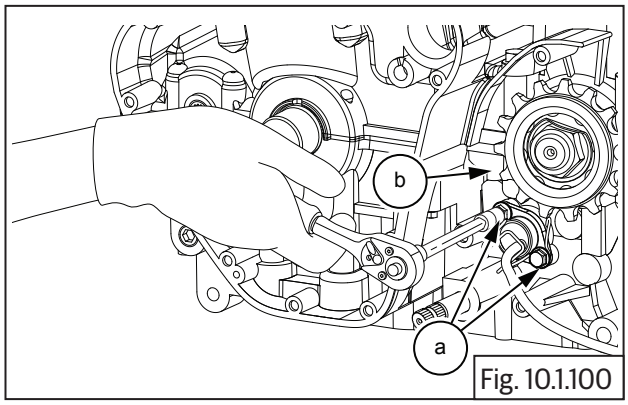

Fig. 10.1.100

	10 mm Socket with Ratchet

- Remove cable bracket **(a)** and gently pull out gear position sensor **(b)** from crankcase LH.

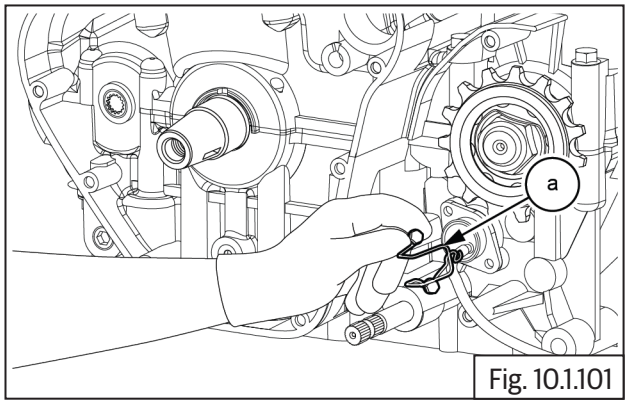

Fig. 10.1.101

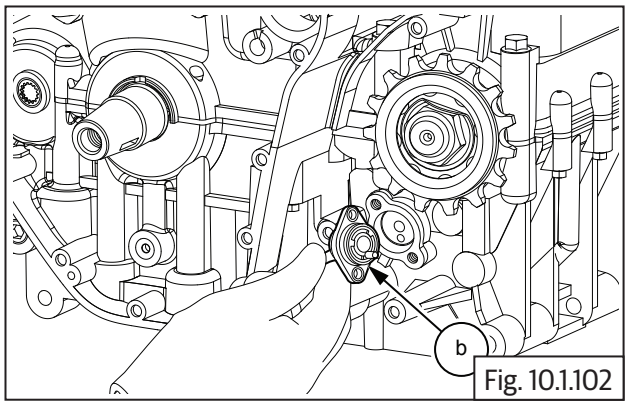

Fig. 10.1.102

10.1.17. Clutch Switch

- Remove headlamp assembly.
- Disconnect clutch switch connector **(a)**.

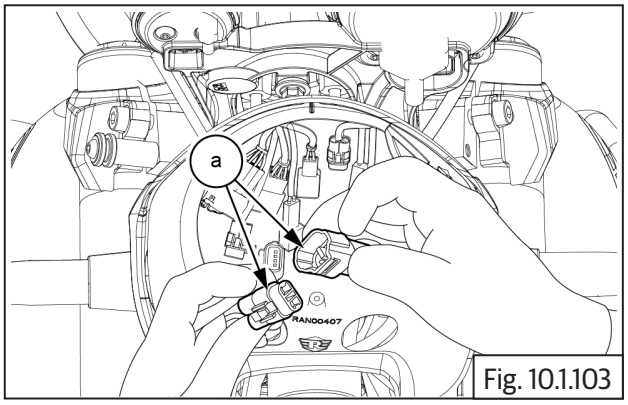

Fig. 10.1.103

- Loosen and remove 2 Nos of screws **(a)** from clutch lever .

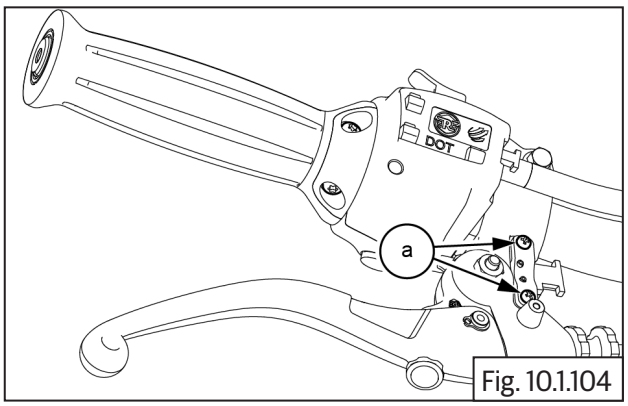

Fig. 10.1.104

	Screw Driver (+)

- Remove the clutch switch **(a)** from clutch lever.

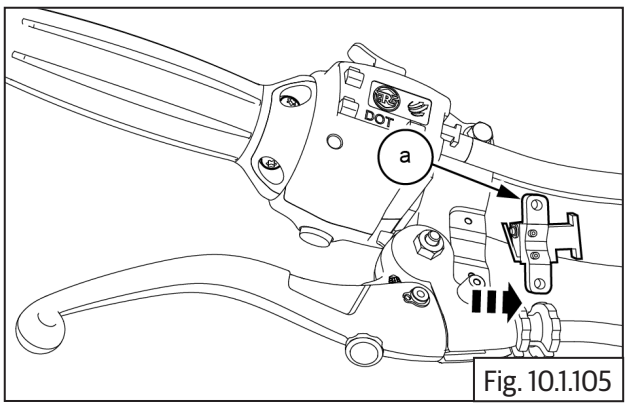

Fig. 10.1.105

10.1.18. Side Stand Switch

⚠ CAUTION

Ensure the motorcycle is upright on a firm and flat surface.

- Position the screw jack directly under the boss of the crank case.
- Carefully use the screw jack to lift the motorcycle until the front wheel is off the ground.
- Make sure the motorcycle is stable and secure before performing any maintenance or repairs.

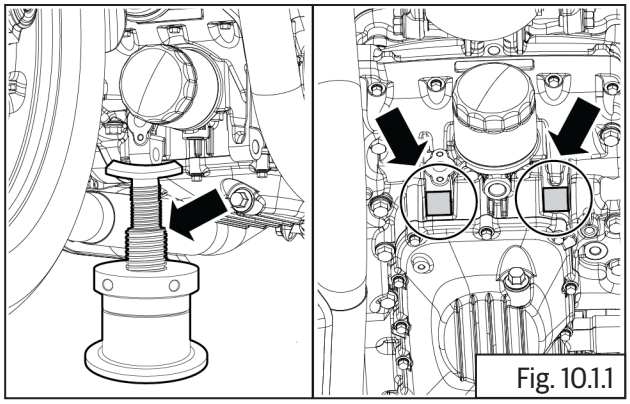

Fig. 10.1.1

- Remove spring **(a)** from the side stand.

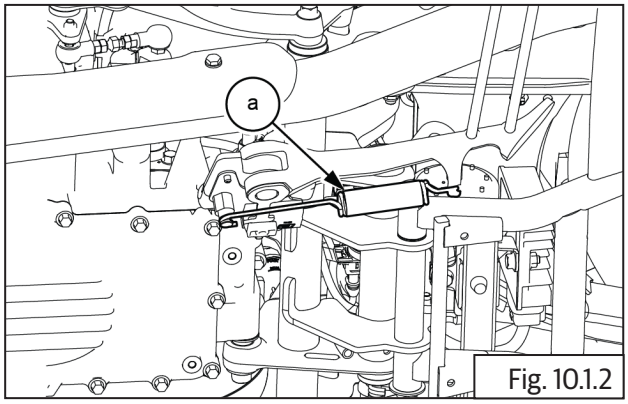

Fig. 10.1.2

	Screw driver

- Remove split pin **(a)** along with washer **(b)** from clevis pin.

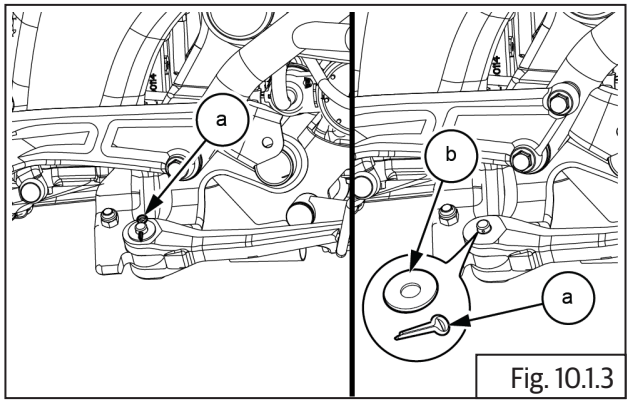

Fig. 10.1.3

	Nose plier

- Remove clevis pin **(a)** from side stand.

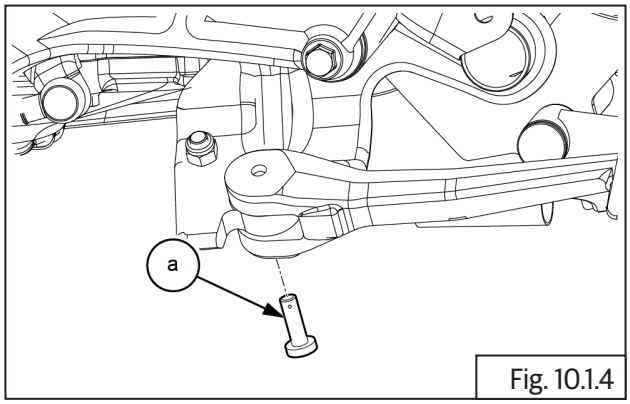

Fig. 10.1.4

- Remove side stand **(a)** from frame **(b)**.

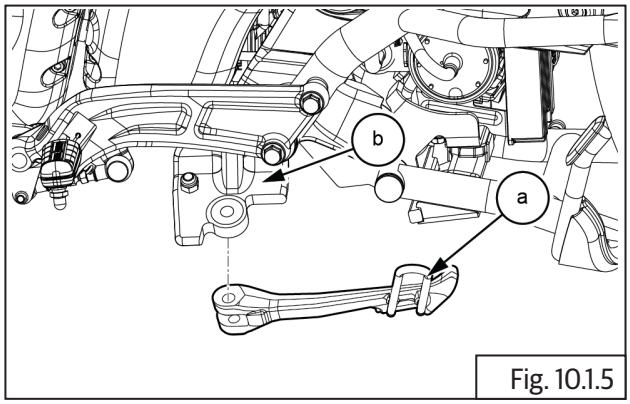

Fig. 10.1.5

- Loosen and remove 1 Nos. hex nut **(M8) (a)** from spring pin.
- Remove spring pin **(c)** and side stand switch **(b)** from frame .

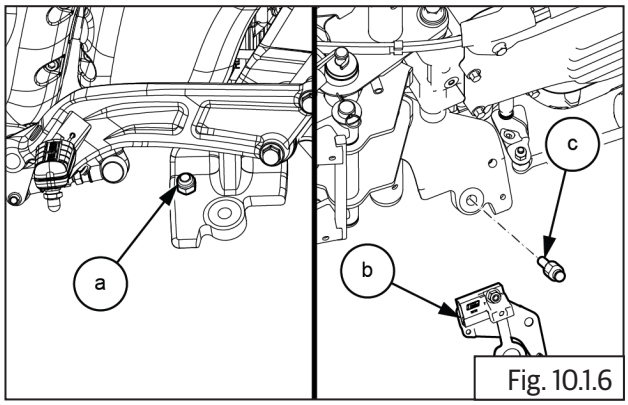

Fig. 10.1.6

	12 mm socket with Ratchet

- Loosen and remove 1 Nos. hex nut **(M6) (a)** from side stand switch plate.
- Remove the side stand switch **(b)** from plate **(c)**.

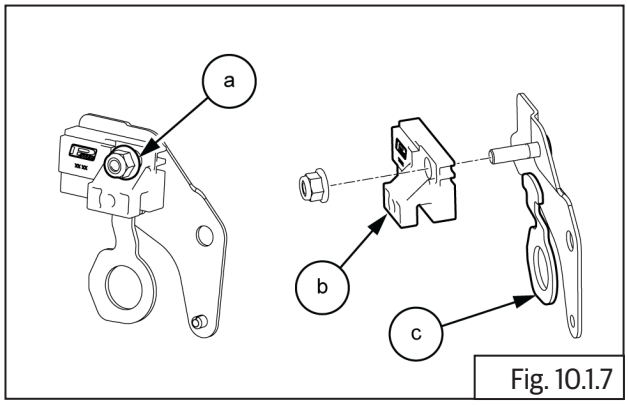

Fig. 10.1.7

	12 mm socket with Ratchet

10.1.19. Starter Motor Solenoid

- Remove the Rear wheel.
- Remove the Rear mudguard in fill cover.
- Locate solenoid connectors below battery tray, ensure ignition off.
- Disconnect starter solenoid connectors **(a)** from wiring harness located below battery tray.

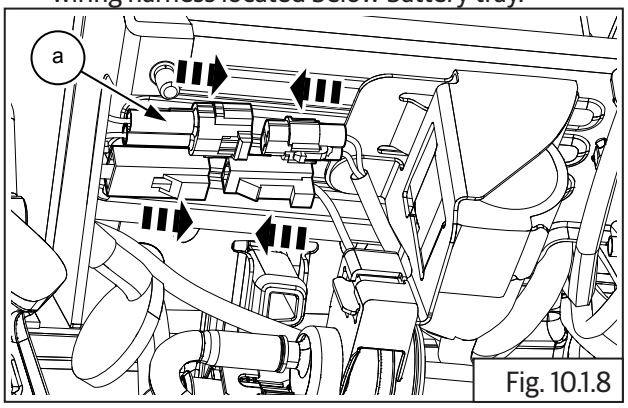

Fig. 10.1.8

- Gently slide and remove solenoid coil **(a)** from battery tray bracket **(b)**.

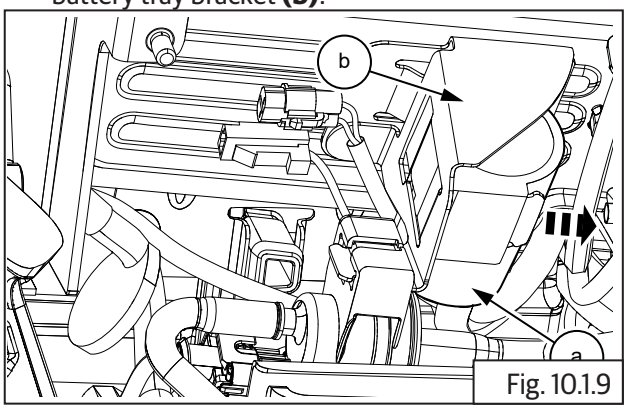

Fig. 10.1.9

Assembly

10.1.21. Engine Control Unit (ECU)

⚠ CAUTION

Before assembling any part of the EMS, the Ignition switch and Engine stop switch MUST be in OFF position

Before connecting ECU into wiring harness, the battery terminals must be disconnected from the battery.

- Locate the ECU **(a)** into RHS chassis frame.

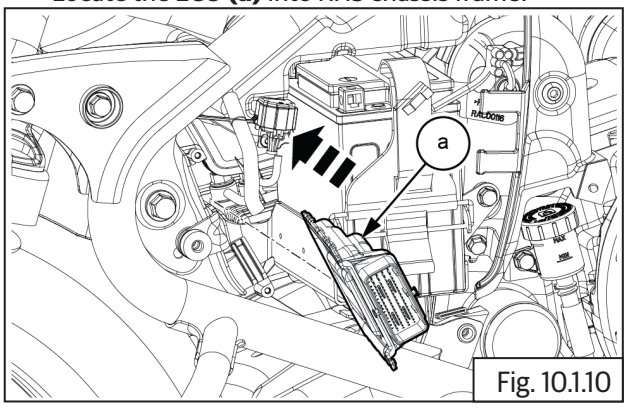

Fig. 10.1.10

- Locate and tighten 2Nos torx screw **(a)** with retaining plate on ECU.

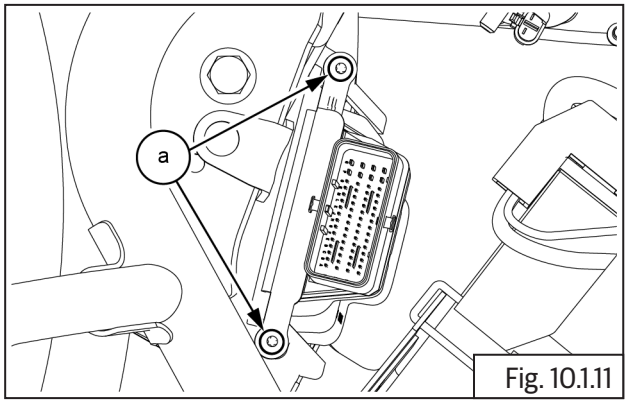

Fig. 10.1.11

	20 mm Torx socket with Ratchet
Torque	1.5 N-m/0.15 kgf-m

- Connect the ECU connector **(a)**.

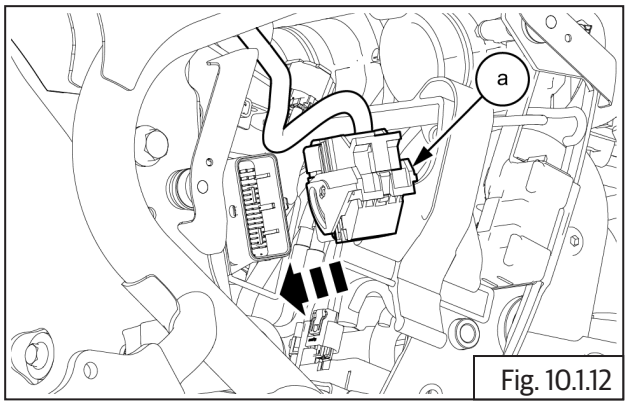

Fig. 10.1.12

- Install the following parts:
- Install the Side panel RH.

⚠ CAUTION

Ensure the locks are fully lifted up and released, before connecting wiring connectors into ECU.

Ensure the locks are handled with care and do not get damaged or broken

Damaged or broken locks will result in loose connections and cause the ECU to fail.

10.1.22. Fuel Pump

- Locate O-rings **(b)** and plate **(a)** into the fuel pump. Ensure it is seated properly.

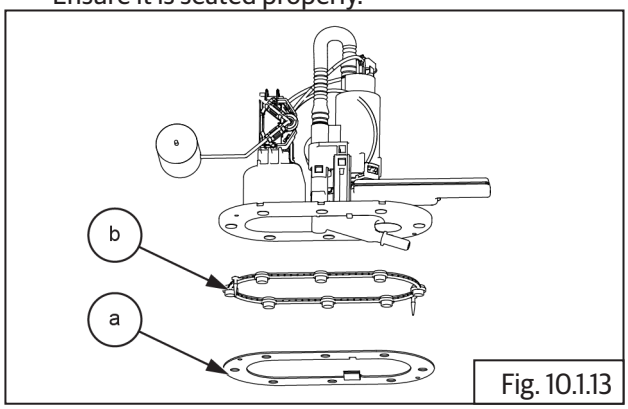

Fig. 10.1.13

- Assemble fuel pump **(a)** into tank **(b)** with outlet pipes facing towards rear of the tank.

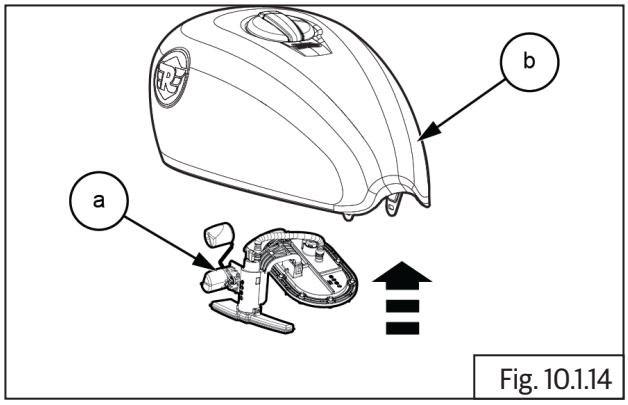

Fig. 10.1.14

- Locate and tighten 8 Nos. Hex socket head bolts **(M5) (a)** to assemble fuel pump **(b)** on fuel tank **(c)**.

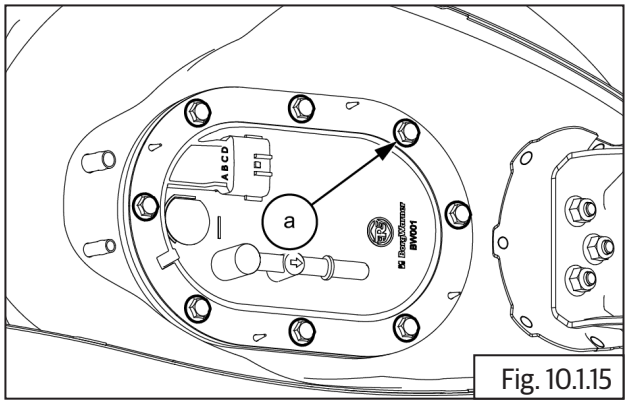

Fig. 10.1.15

	10 mm Socket with Ratchet
Torque	5 N-m / 5.0 kgf-m

- Assemble fuel tank assembly.

⚠ CAUTION

- **Ensure the following:**
- **Fuel is refilled into fuel tank.**
- **Fuel feed and return hoses are connected into fuel rail.**
- **Wiring couplers to fuel pump and low fuel sensor are connected.**
- **EVAP hose pipes are connected.**
- **Water drain hose are connected.**

⚠ WARNING

Gasoline is extremely flammable.

- Assemble rider seat.
- Assemble side panel RH.

10.1.23. Fuel injectors

- Fuel injectors are located on throttle body along with rail.
- Ensure the O-rings upper **(a)** and lower **(b)**.

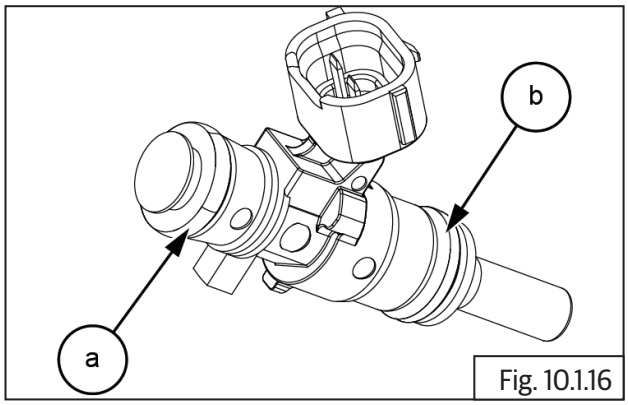

Fig. 10.1.16

- Gently assemble injectors **(a)** into fuel rail **(b)** along with upper and lower O-rings .
- Gently assemble injector lock **(c)** into fuel rail and injector.

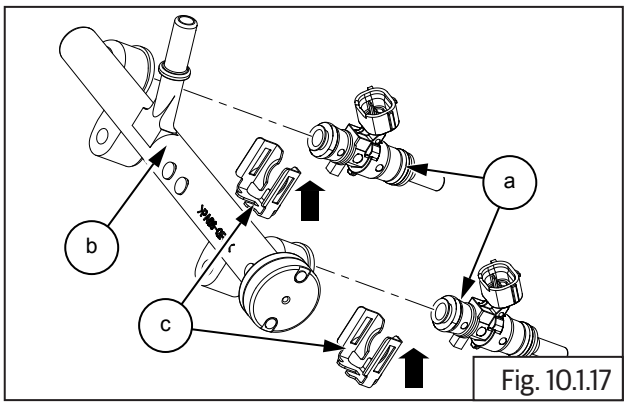

Fig. 10.1.17

- Gently locate fuel rail **(a)** along with injectors **(b)** into throttle body.

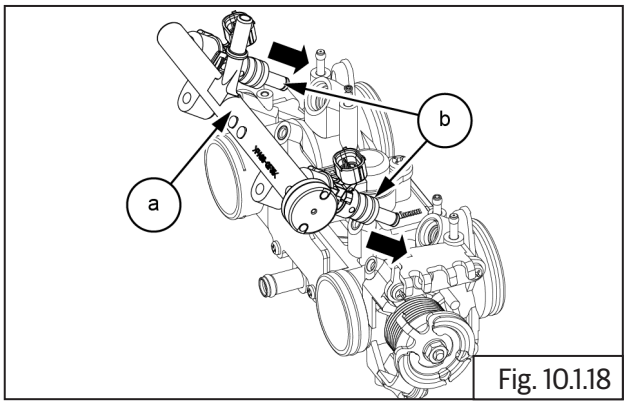

Fig. 10.1.18

- Insert and tighten 2 Nos. button head screws **(a)** into fuel injector rail **(b)** located on throttle body.

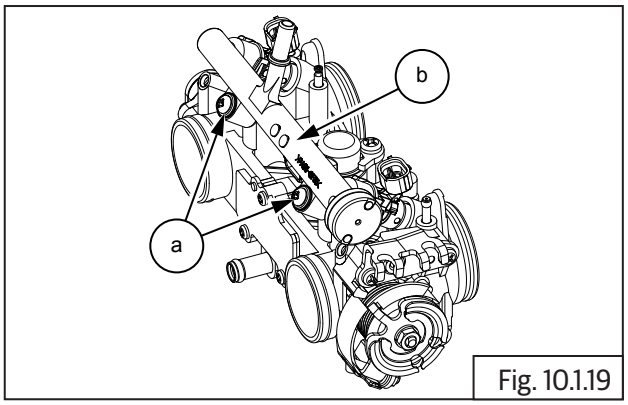

Fig. 10.1.19

	Screw driver (+)

- Assemble throttle body.

⚠ CAUTION

- **Ensure the following:**
- **Fuel is refilled into fuel tank.**
- **Fuel feed and return hoses are connected into fuel rail.**
- **Wiring couplers to fuel pump and low fuel sensor are connected.**
- **EVAP hose pipes are connected.**
- **Water drain hose are connected.**

- Assemble the Fuel tank.
- Assemble the Rider seat.
- Assemble the RH side cover.

10.1.24. Manifold Absolute Pressure Sensor (MAP)

- Locate the map sensor on the bracket.
- Locate and tighten Hex socket head bolt **(M6) (a)** MAP sensor to bracket.

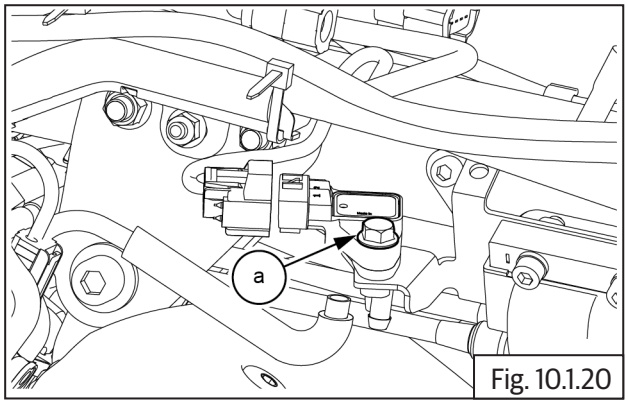

Fig. 10.1.20

	10mm socket with Ratchet

- Lock wiring harness connector **(a)** into MAP sensor connector .

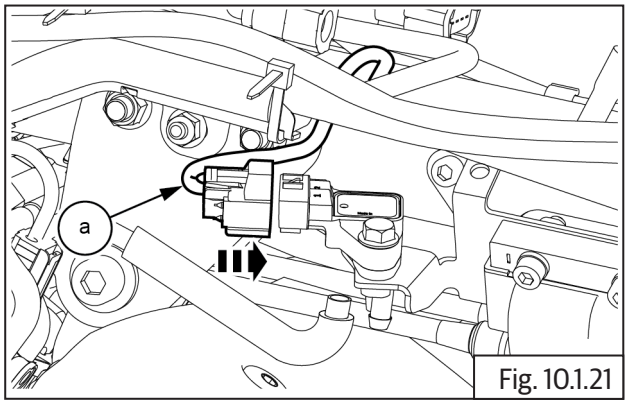

Fig. 10.1.21

- Connect MAP Vacuum hose **(a)** into map sensor.

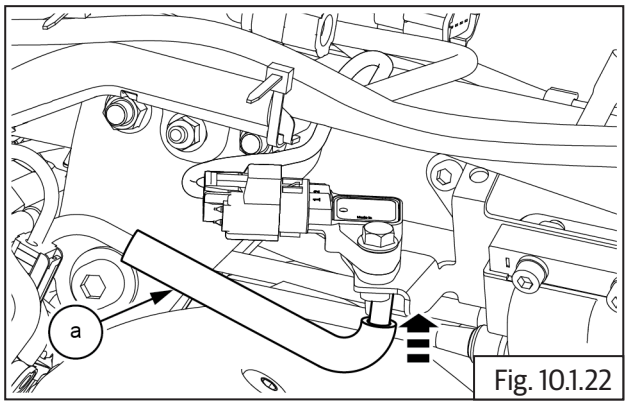

Fig. 10.1.22

- Assemble fuel tank assembly.

⚠ WARNING

Gasoline is extremely flammable.

⚠ CAUTION

- **Ensure the following:**
- **Fuel is refilled into fuel tank.**
- **Fuel feed and return hoses are connected into fuel rail.**
- **Wiring couplers to fuel pump and low fuel sensor are connected.**
- **EVAP hose pipes are connected.**
- **Water drain hose are connected**

- Assemble rider seat.
- Assemble side panel RH.

10.1.25. Idle Speed Controller (ISC - Stepper Motor)

- Locate stepper motor **(a)** into throttle body **(b)** along with new O-ring and spring **(c)**.

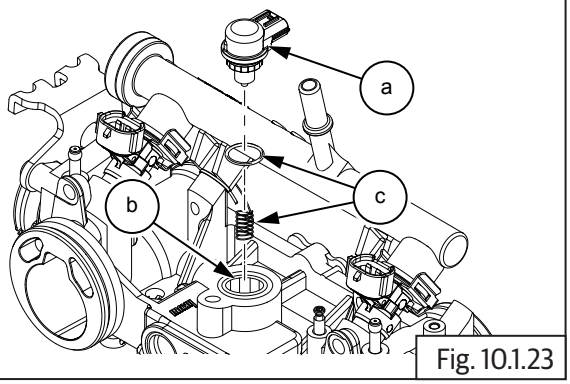

Fig. 10.1.23

- Insert and tighten button head screw **(a)** into ISC stepper motor clamp **(b)**.

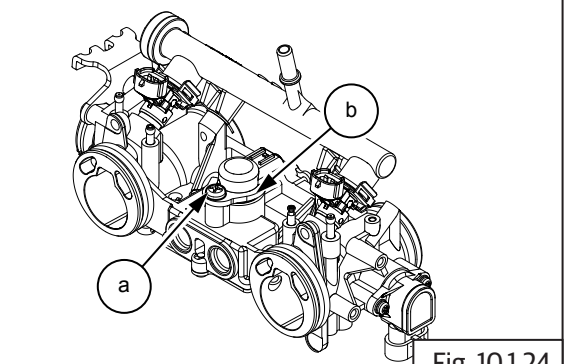

Fig. 10.1.24

	Screw driver (+)

10.1.26. Throttle Body

- Ensure Ignition switch and Engine stop switch are in "OFF" position.

NOTE
• *Ensure both screws are sufficiently loosened and the worm clips rotates easily in the groove in the manifolds.*
• *Ensure both screws are sufficiently loosened, and the worm clips rotates easily in the groove in the air filter bellows worm clips.*

- Gently locate throttle body into inlet manifold rubbers with fuel rail and injectors and ISC/TPS.
- Tighten worm clip screw on inlet manifold on Cylinder (RH).
- Tighten worm clip screw on inlet manifold on Cylinder (LH) .
- Tighten wire clips on the LH and RH air filter connection tubes.
- Tighten the 2 Nos. air filter box assembly mounting bolts.
- Insert MAP sensor vacuum hose into throttle body.
- Insert EVAP hoses into throttle body.
- Connect electrical couplers into TPS, idle speed control stepper motor and Fuel injectors LH and RH.
- Assemble the following:
  - Throttle cable.
  - Throttle body covers LH and RH.
  - Fuel tank assembly.

⚠ CAUTION
• **Ensure the following:**
• **Fuel is refilled into fuel tank.**
• **Fuel feed and return hoses are connected into fuel rail.**
• **Wiring couplers to fuel pump and low fuel sensor are connected.**
• **EVAP hose pipes are connected.**
• **Water drain hose are connected.**

⚠ WARNING
Gasoline is extremely flammable.

10.1.27. Throttle Position sensor (TPS)

- The TPS **(a)** is located on the left side of the throttle body and should not be removed from the throttle body under any circumstances.

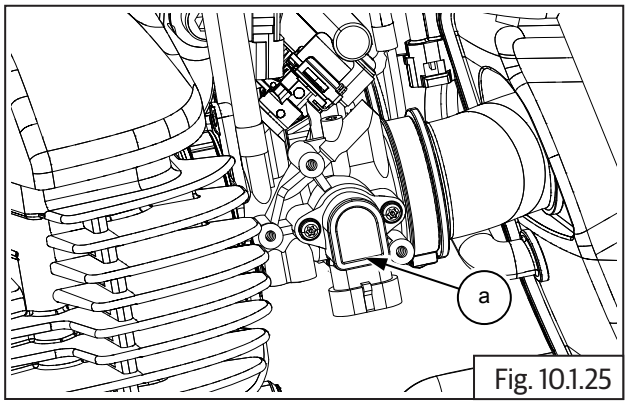

Fig. 10.1.25

10.1.28. Engine Oil Temperature Sensor (EOT)

- The EOT **(a)** is located on the LH side cylinder head below the throttle body.

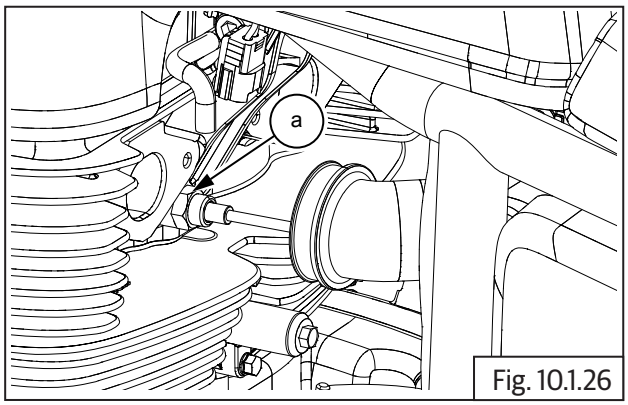

Fig. 10.1.26

- Locate EOT sensor **(a)** along with O-ring **(b)** into engine head assembly **(c)**.

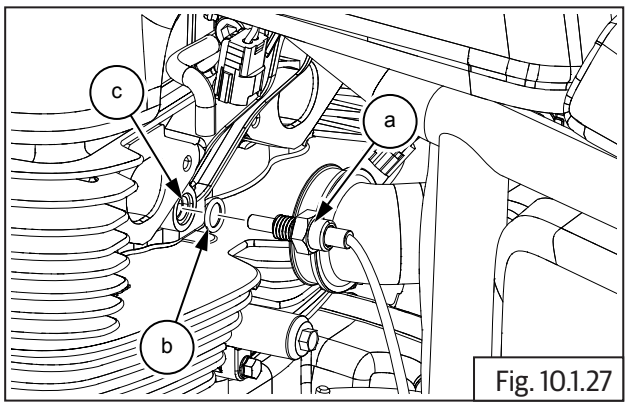

Fig. 10.1.27

- Tighten EOT sensor Hex head **(M17) (a)** into engine head assembly **(b)**.

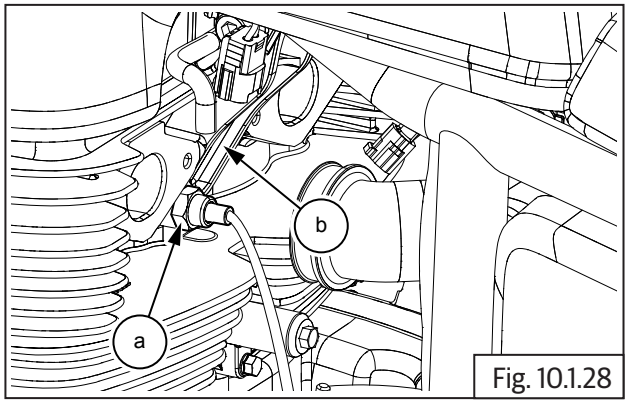

Fig. 10.1.28

	17 mm Deep groove spanner
Torque	9 N-m/0.9 kgf-m

- Connect EOT sensor connector **(a)** into wiring harness **(b)** above throttle body.
- Ensure connector is locked and wire is routed correctly.

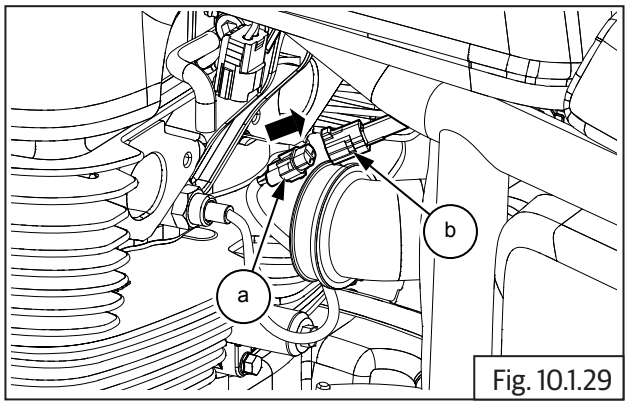

Fig. 10.1.29

- Assemble throttle body cover LH.

10.1.29. HEGO (O2) Sensors

- The HEGO sensors are located on the exhaust pipes near the cylinder head.

⚠ WARNING

The engine and exhaust systems get extremely hot during normal operation and can result in serious burns if touched. Make sure exhaust pipes are not hot and is at the same levels of ambient/surrounding temperature, whenever working on the engine or exhaust systems.

NOTE

- *Ensure the engine/exhaust is cold before assembling the HEGO (O2) sensors.*
- *Ensure Ignition switch and Engine stop switch are in OFF position.*

- Insert the RH HEGO (O2) sensor wiring coupler through a deep grooved ring spanner on the sensor hex head tighten HEGO sensor RH **(a)** into exhaust pipe RH **(b)**.

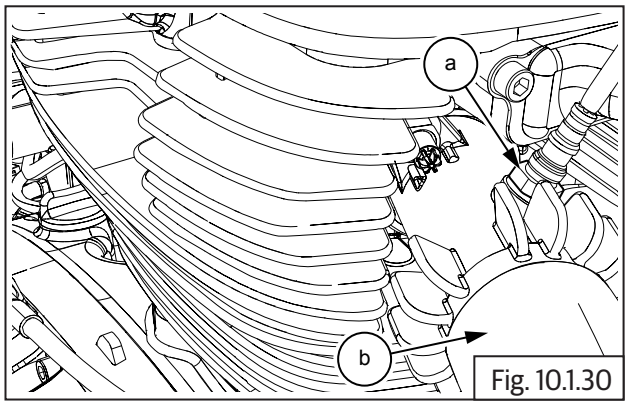

Fig. 10.1.30

	17 mm Deep groove spanner

- Insert the LH HEGO (O2) sensor wiring coupler through a deep grooved ring spanner on the sensor hex head tighten HEGO sensor LH **(a)** into exhaust pipe LH **(b)**.

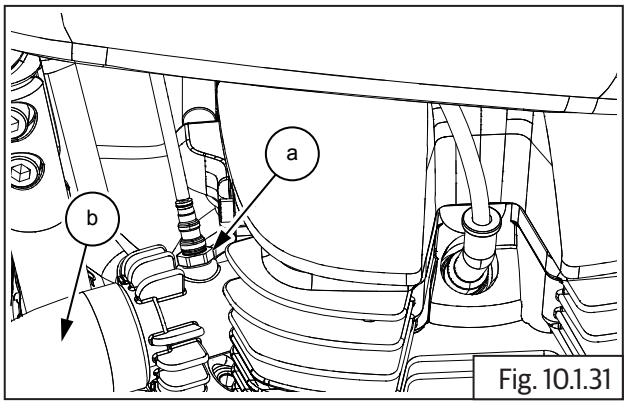

Fig. 10.1.31

	17 mm Double end spanner/Deep groove spanner
Torque	18 N-m / 1.8 kgf-m

- Connect Hego / oxygen sensor coupler **(a)** on both LH and RH on the front side top of engine.

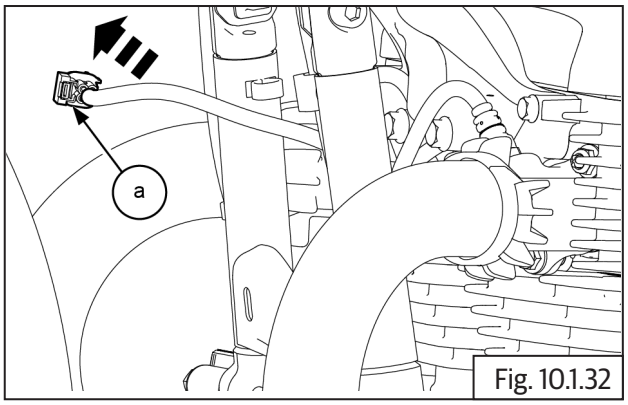

Fig. 10.1.32

- Assemble horn assembly.

10.1.30. Intake Air Temperature sensor (IAT)

- Locate the intake air temperature sensor **(a)** into air filter box assembly.

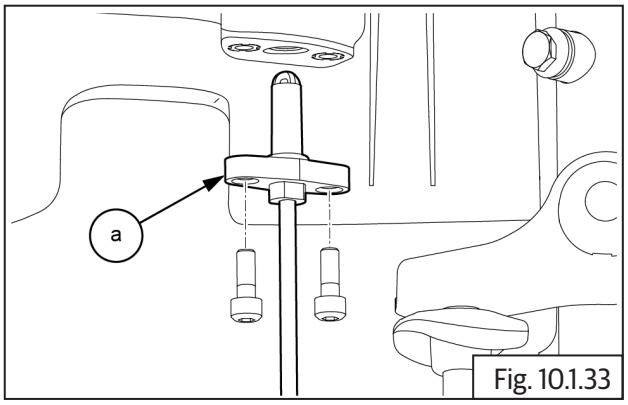

Fig. 10.1.33

- Locate and tighten 2 Nos. allen head bolts **(M5) (a)** on intake air temperature (IAT) sensor.

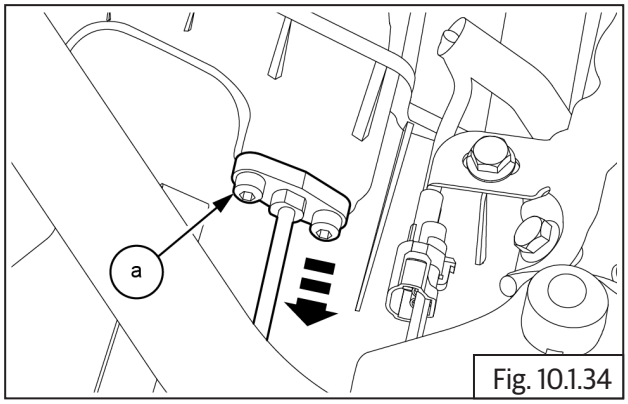

Fig. 10.1.34

	4 mm Allen Socket with Ratchet
Torque	2 N-m / 0.2 kgf-m

- Assemble the Side panel LH.
- Assemble the Rider seat.
- Assemble the Side panel RH.

⚠ CAUTION

Ensure the following:

Fuel is refilled into fuel tank.

Fuel feed and return hoses are connected into fuel rail.

Wiring couplers to fuel pump and low fuel sensor are connected.

EVAP hose pipes are connected.

Water drain hoses are connected.

⚠ WARNING

Gasoline is extremely flammable and highly explosive. Please handle with care. Improper handling can lead to fatal accident or serious injury. Always drain/fill fuel only in a well ventilated area.

Ensure there is no scope for flames or sparks near by while draining/filling fuel.

- Assemble the Side panel LH.
- Assemble the Rider seat.

10.1.31. Purge Valve

- Fix purge valve **(a)** into the rubber boot.

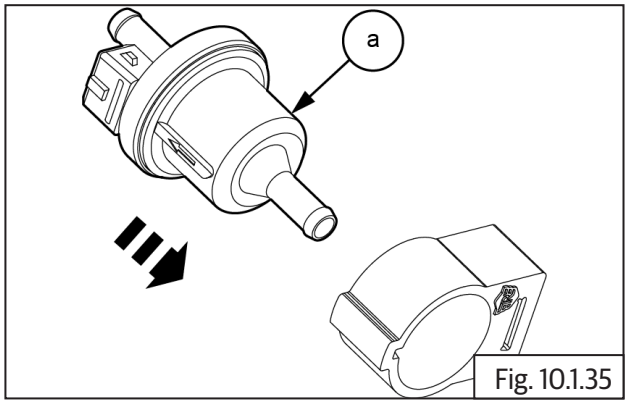

Fig. 10.1.35

- Slide and fix the purge valve with rubber boot **(a)** into the bracket.

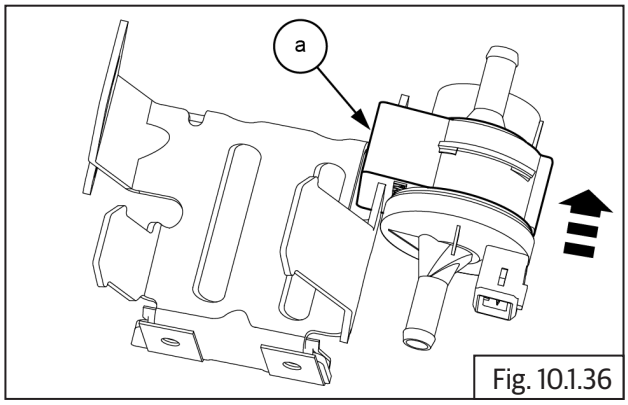

Fig. 10.1.36

- Connect input hose **(a)** to purge valve .

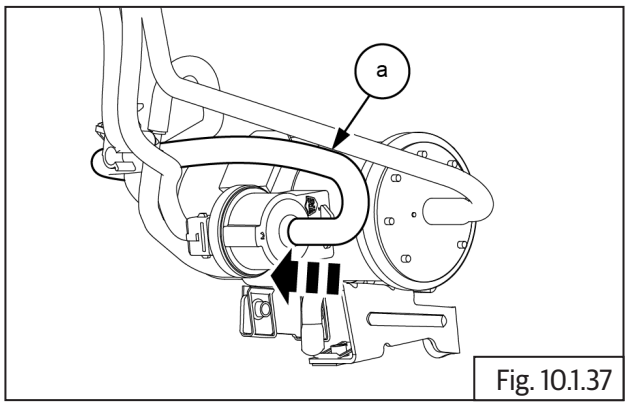

Fig. 10.1.37

- Connect out put hose **(a)** to purge valve .

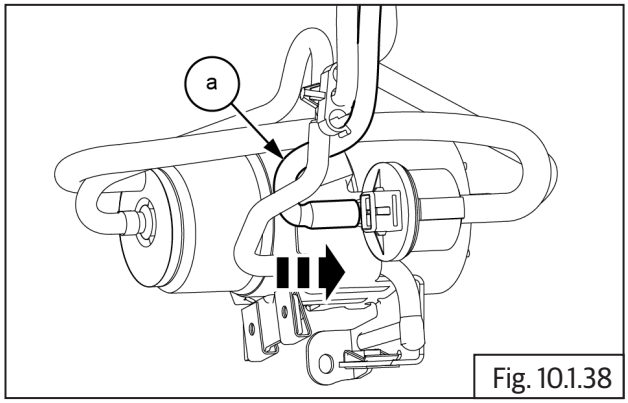

Fig. 10.1.38

- Connect electrical connector **(a)** to purge valve .

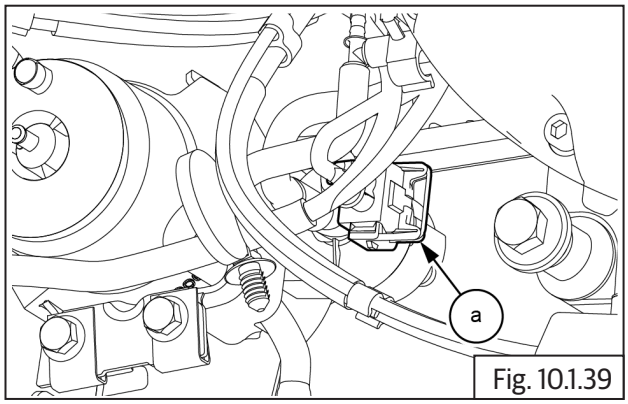

Fig. 10.1.39

- Assemble the Pillion Seat.
- Assemble the RH Infill Panel.
- Assemble the LH Infill Panel.
- Assemble the Charcoal Canister.
- Assemble the Throttle Body Cover.
- Assemble the Battery from frame.

10.1.32. Roll Over Sensor

- Locate and tighten 1 Nos button head screw **(M5) (a)** on oll over sensor

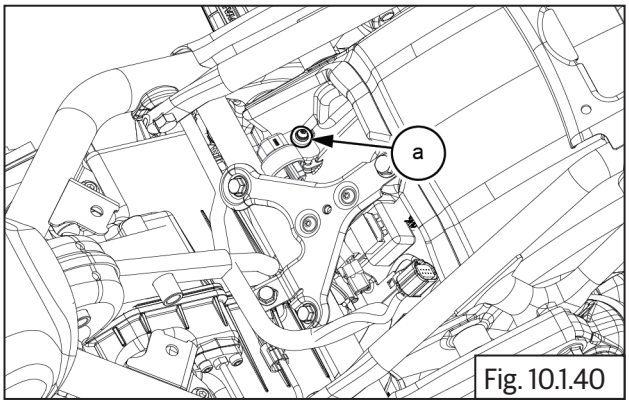

Fig. 10.1.40

	20 mm Torx socket with Ratchet
Torque	7 N-m / 0.7 kgf-m

- Connect roll over sensor connector **(a)**.

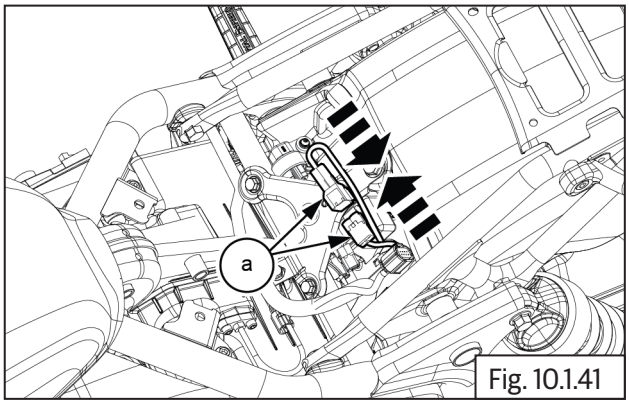

Fig. 10.1.41

- Assemble the Rider seat.
- Assemble the Side panel RH.

10.1.33. Ignition Coil

- Assemble ignition coil bracket **(a)** into frame.

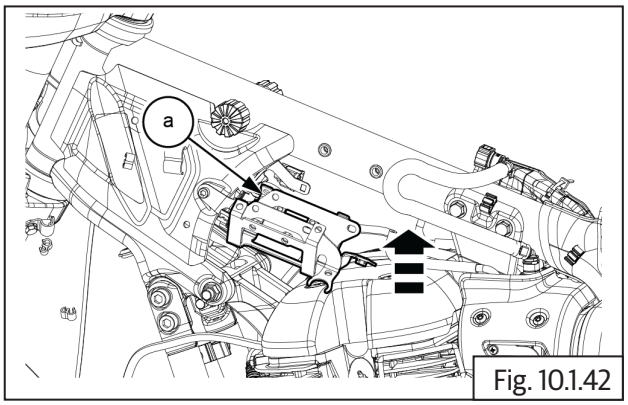

Fig. 10.1.42

- Insert and tighten cap bolts 4 Nos **(M6) (a)** with washers into ignition coil LH and RH.

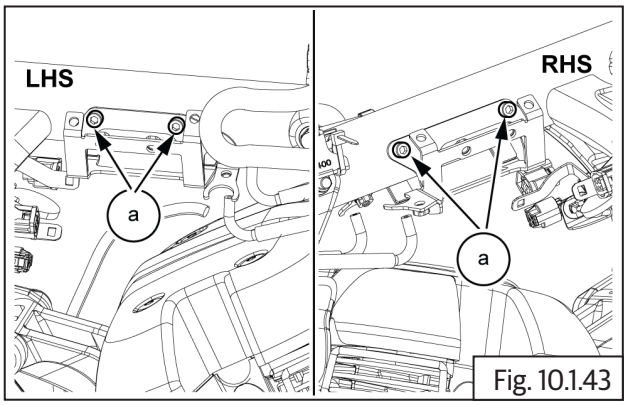

Fig. 10.1.43

	5 mm Allen socket with Ratchet
Torque	10 N-m / 1 .0 kgf-m

- Locate ignition coil LH and RH **(a)** along with HT cables on the frame.

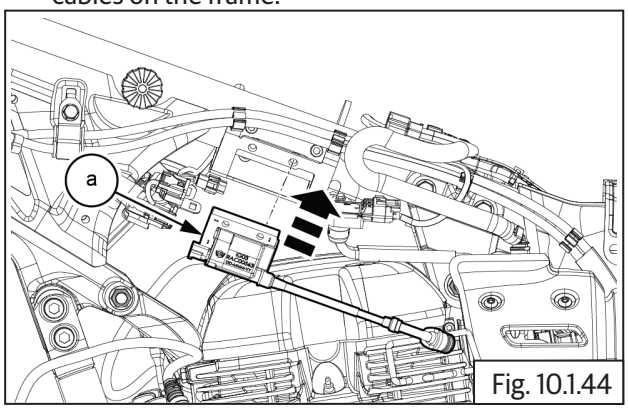

Fig. 10.1.44

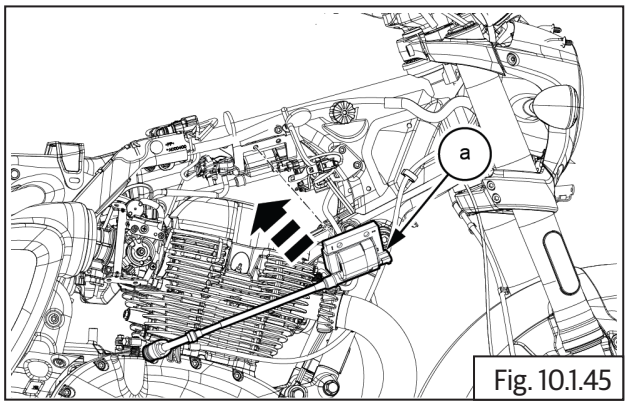

Fig. 10.1.45

- Locate and tighten cap bolts **(M6) (a)** with washers 4 Nos into both side ignition coil**.**

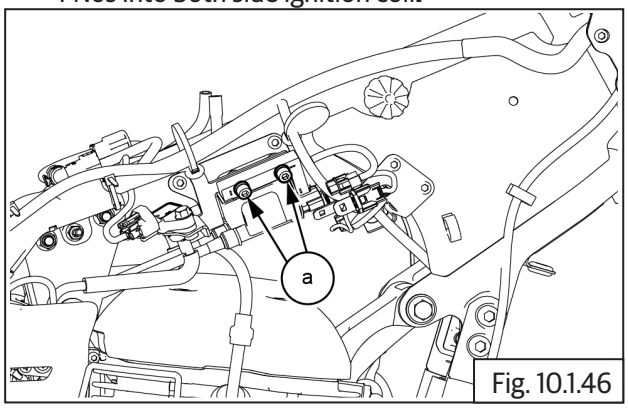

Fig. 10.1.46

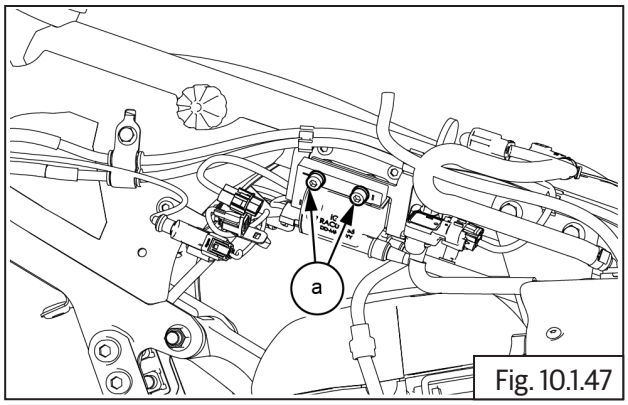

Fig. 10.1.47

	5 mm Allen socket with Ratchet
Torque	10 N-m / 1 .0 kgf-m

- Connect ignition coil connector LH and RH **(a)** from wiring harness located below fuel tank.

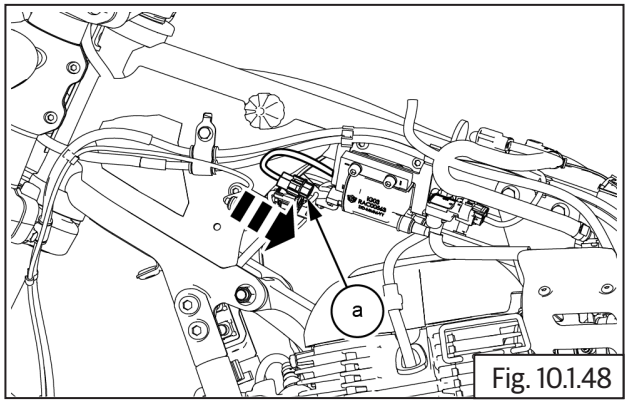

Fig. 10.1.48

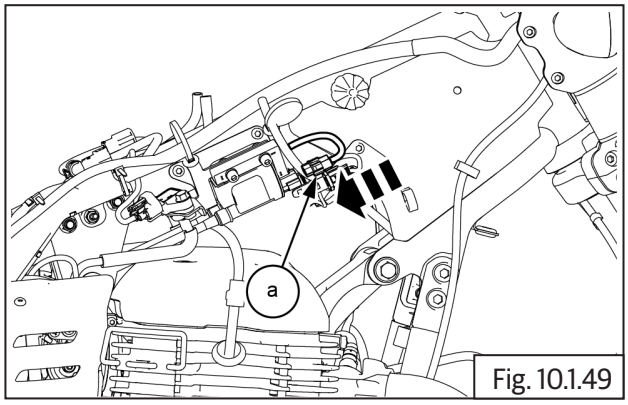

Fig. 10.1.49

- Gently insert HT cable RH **(a)** into spark plug **(b)**.

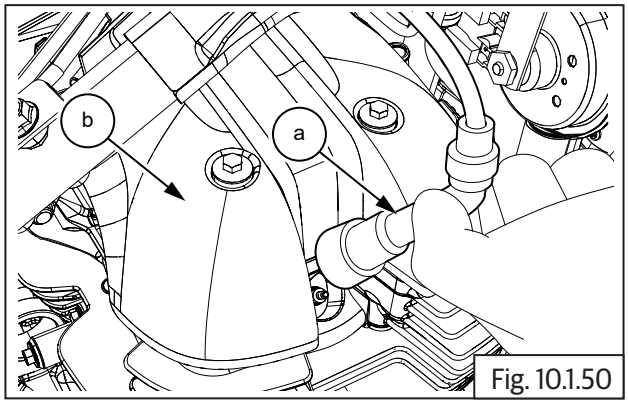

Fig. 10.1.50

- Gently insert HT cable LH **(a)** into spark plug.

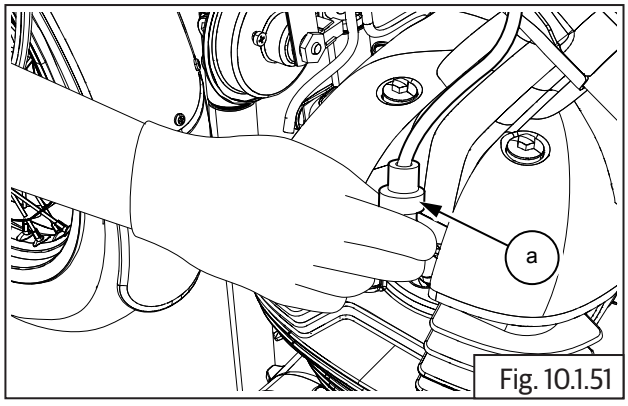

Fig. 10.1.51

- Assemble the fuel tank.

⚠ CAUTION
• **Ensure the following:** • **Fuel is refill into fuel tank.** • **Fuel feed and return hoses are connected into fuel rail.** • **Wiring couplers to fuel pump and low fuel sensor are connected.** • **EVAP hose pipes are connected.** • **Water drain hose are connected.**

⚠ WARNING
Gasoline is extremely flammable.

- Assemble rider seat Assembly.
- Assemble side panel RH.

10.1.34. Crank Position Sensor

- The crank position sensor is located inside the engine cover LH and attached to the stator coil.
- Locate starter coil along with crank shaft position sensor wire assembly **(a)** into cover LH **(b)**.

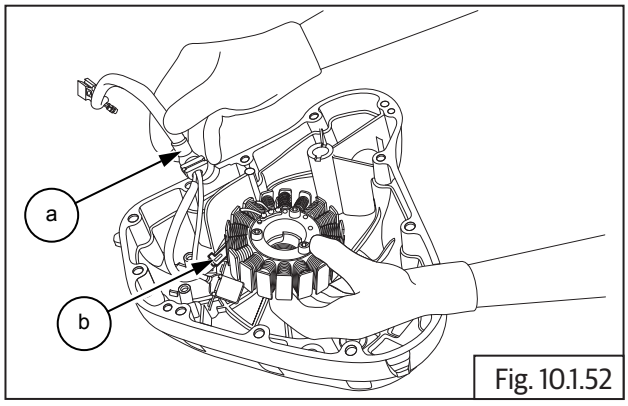

Fig. 10.1.52

- Assemble guide plate **(a)** into LH cover.

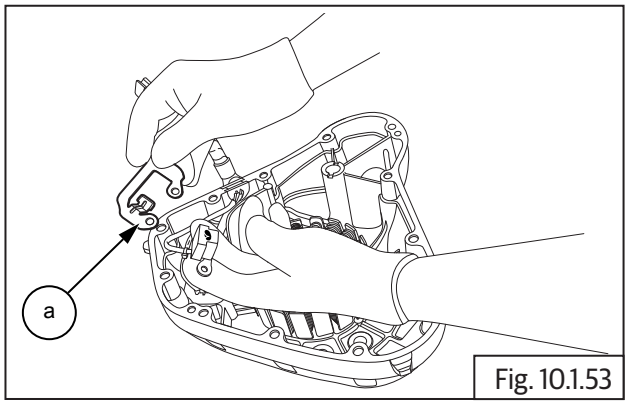

Fig. 10.1.53

- Locket and tighten 2 Nos Hex socket head screws **(M5) (a)** into guide plate **(b)**.

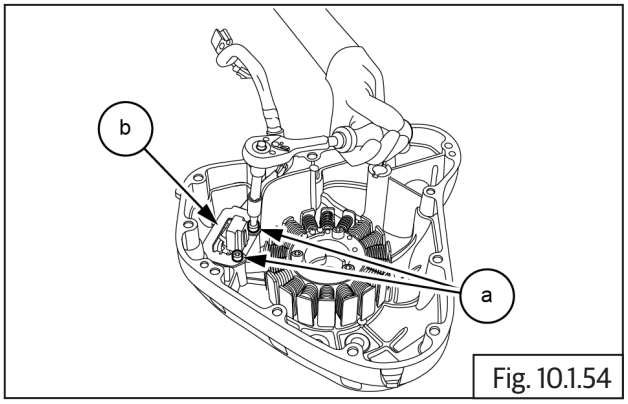

Fig. 10.1.54

	4 mm Allen key with Ratchet
Torque	8 N-m/0.8 kgf-m

- Locate and tighten 3 Nos. Hex socket head screws **(M5) (a)** into LH cover that hold starter coil **(b)**.

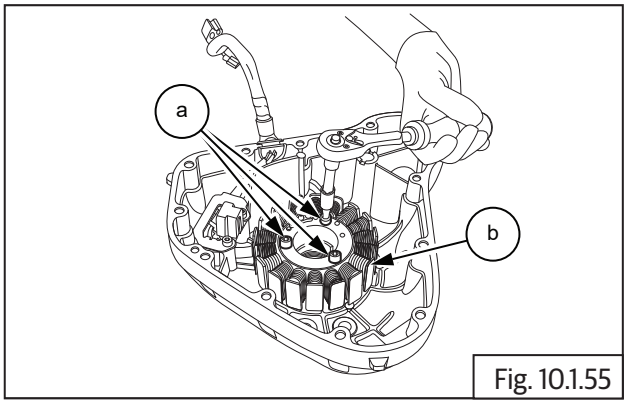

Fig. 10.1.55

	4 mm Allen key with Ratchet
Torque	10 N-m/1.0 kgf-m

- Locate crank shaft position sensor and wiring harness behind engine on RH, near RR module.
- Connect crank position sensor connector **(a)** to harness connector **(b)**.
- Ensure the wiring harness strapped properly.

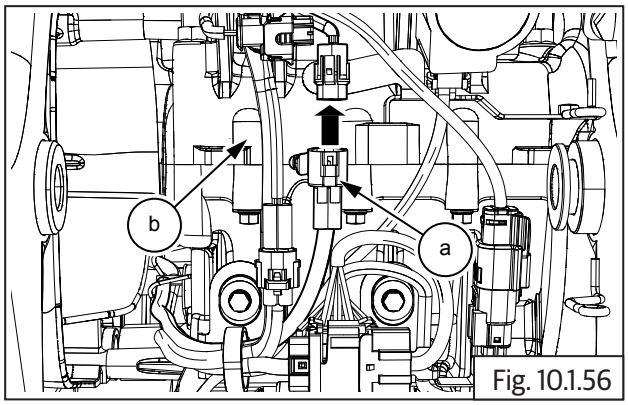

Fig. 10.1.56

- Assemble the FD sprocket cover.
- Assemble the Cover LH from Engine Refer.
- Assemble the Fill engine oil.

10.1.35. Gear Position Sensor

- The gear position sensor is located on the crankcase LH before FD sprocket
- Ensure Ignition switch and Engine stop switch are in OFF position.
- Gently locate gear position sensor **(a)** below FD sprocket.

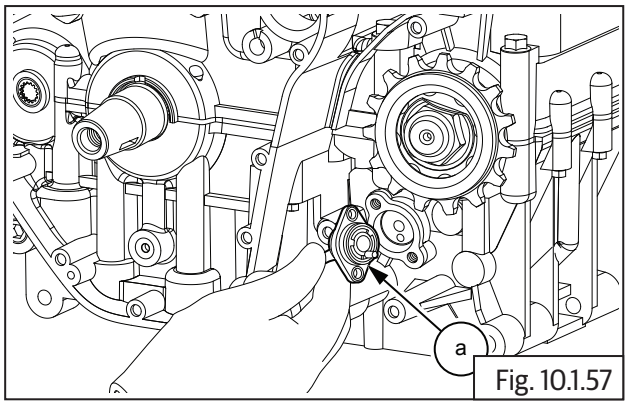

Fig. 10.1.57

- Gently locate gear position sensor wiring holder over gear position sensor and locate the bracket **(a)**.

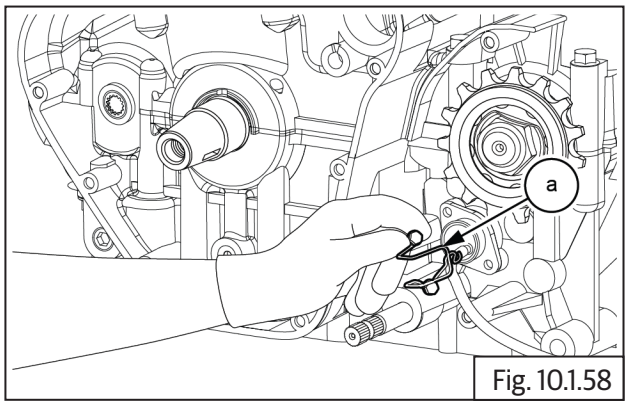

Fig. 10.1.58

- Insert and tighten 2 Nos. Hex head bolts **(M6) (a)** located below FD sprocket **(b)**.

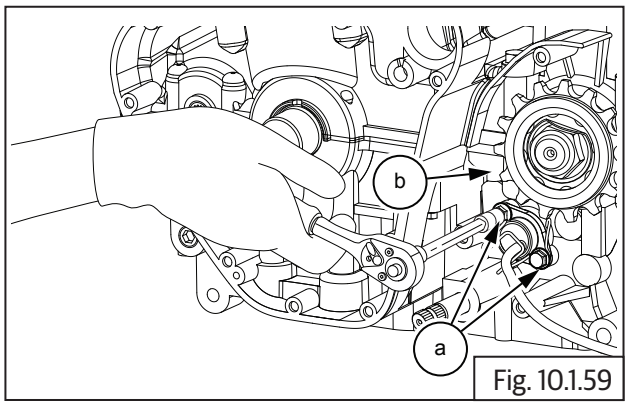

Fig. 10.1.59

	10 mm Allen socket With Ratchet
Torque	10 N-m/1.0 kgf-m

- Connect gear position sensor connector **(a)** to wiring harness connector located on rear side of engine **(b)**.
- Ensure connector is locked properly and wiring is routed correctly.

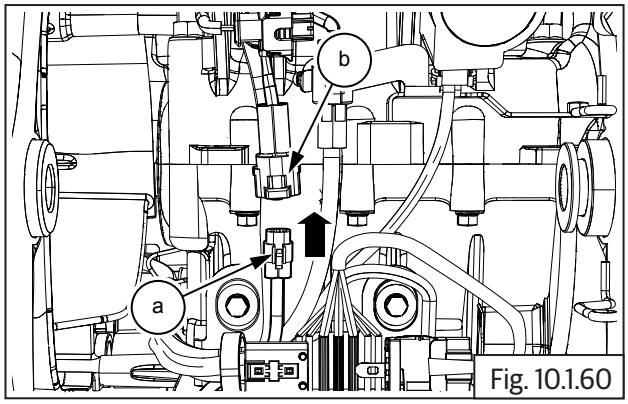

Fig. 10.1.60

- Assemble FD sprocket cover.

10.1.36. Clutch Switch

- Locate the clutch switch **(a)** into clutch lever.

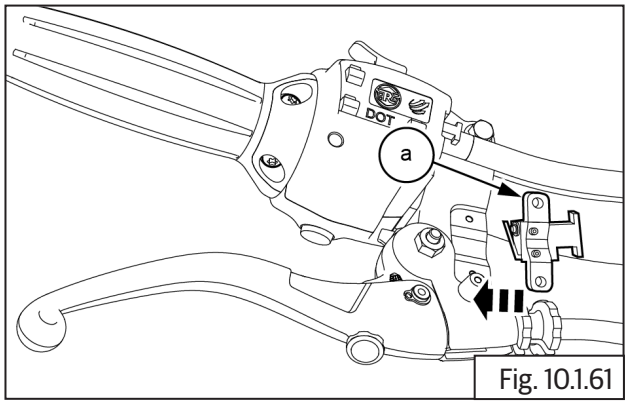

Fig. 10.1.61

- Locate and tighten 2 Nos of screws **(a)** into clutch lever .

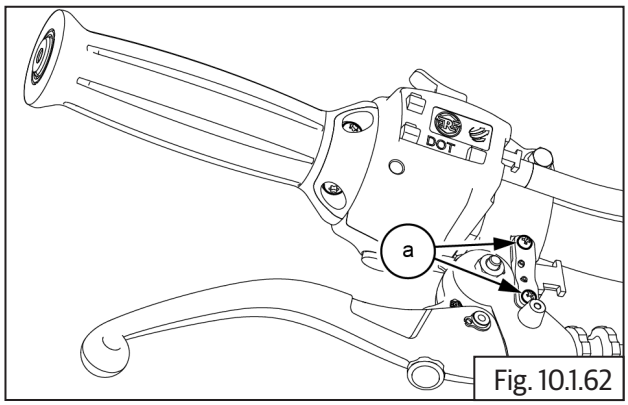

Fig. 10.1.62

	Screw Driver (+)

- Connect clutch switch connector **(a)**.

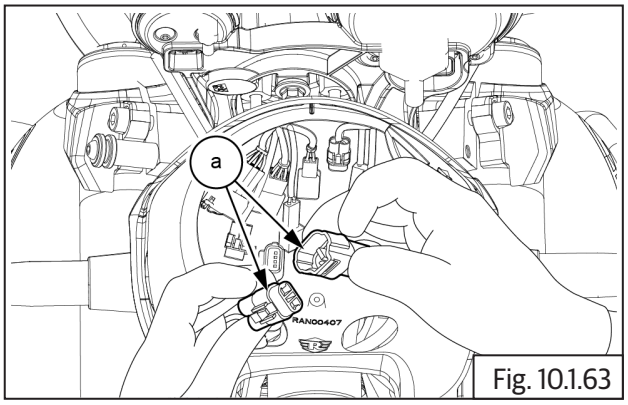

Fig. 10.1.63

- Assemble headlamp assembly.

10.1.37. Side Stand Switch

⚠ CAUTION

Ensure the motorcycle is upright on a firm and flat surface.

- Position the screw jack directly under the boss of the crank case.
- Carefully use the screw jack to lift the motorcycle until the front wheel is off the ground.
- Make sure the motorcycle is stable and secure before performing any maintenance or repairs.

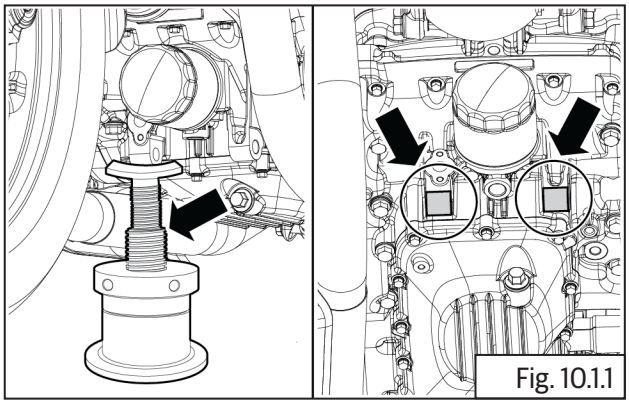
Fig. 10.1.1

- Locate side stand switch **(b)** into the plate **(c)**.
- Locate and tighten 1 Nos. hex nut **(M6) (a)** into side stand switch plate.

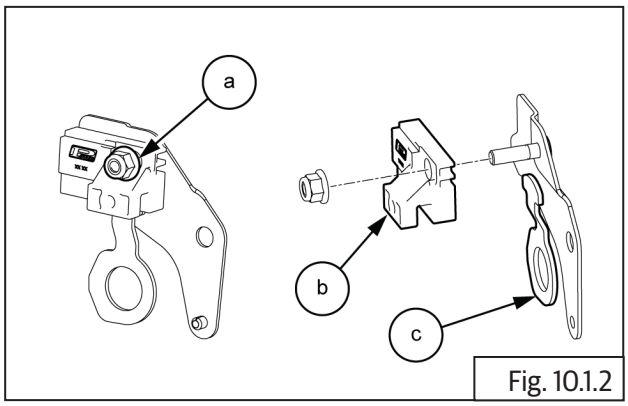

Fig. 10.1.2

	10 mm Socket with Ratchet
Torque	10 N-m / 1.0 kgf-m

- Locate spring pin **(c)** and side stand switch **(b)** into the frame .
- Locate and tighten 1 Nos. hex nut **(M8) (a)** on spring pin.

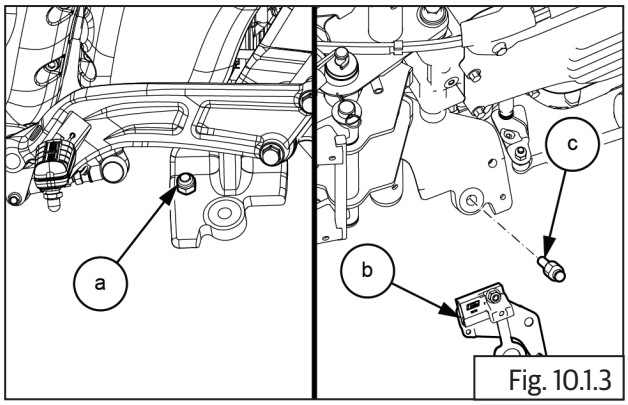

Fig. 10.1.3

	12 mm Socket with Ratchet
Torque	25 N-m/2.5 kgf-m

10.1.38. Starter Motor Solenoid

- Gently locate solenoid coil **(a)** on battery bracket along with battery positive (+)cable.

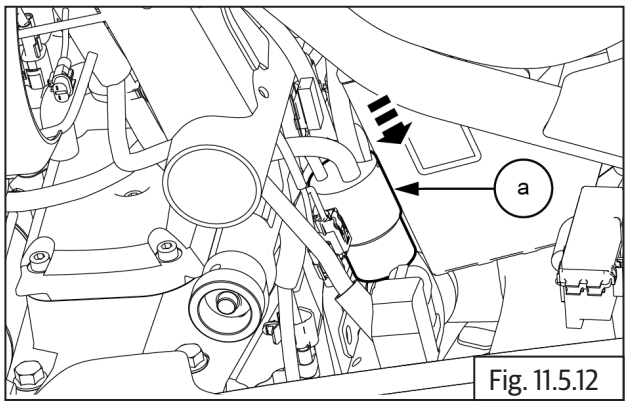

Fig. 11.5.12

- Locate and tighten the nut into self motor solenoid main cable **(a)**

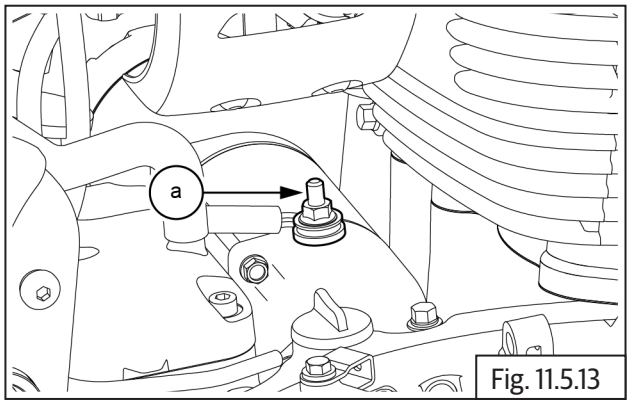

Fig. 11.5.13

	8 mm Socket and Ratchet

- Assemble the Rear mudguard in fill cover.
- Assemble the Wheel speed sensor front and rear.
- Assemble the Battery from frame.
- Assemble the RH side Panel.
- Assemble the LH side Panel.

10.1.39. Actuator

Actuator Tests

- The following actuators can be tested for their functionality using the diagnostic tool/ PC software.
  1. Fuel Pump
  2. Injector
  3. Ignition Coil
  4. O2 sensor heater
  5. Malfunction Indication Lamp (MIL)
  6. Idle Air Control Valve (IACV)
  7. Canister Purge Valve (CPV)
  8. Accessory Relay

Test Procedure

- **Entry Conditions**
  1. Actuator tests can be carried out when the ignition key and kill switch are ON and engine speed is 0.
  2. For IACV alone, engine speed can be greater than 0.
  3. For actuation of injector and ignition coil, gear should be in neutral. If not in neutral, clutch lever should be pressed.
  4. Errors associated to the corresponding actuator, if present, will inhibit the actuation.
- **Procedure**

  A. In EOL software
  1. Connect the tool with the diagnostic coupler in the vehicle and connect it with PC using the USB cable.
  2. Select the option “EOL” & select Actuator.
  3. Select the required actuator and press.

B. In NACSII tool

1. Connect the tool with the diagnostic coupler in the vehicle

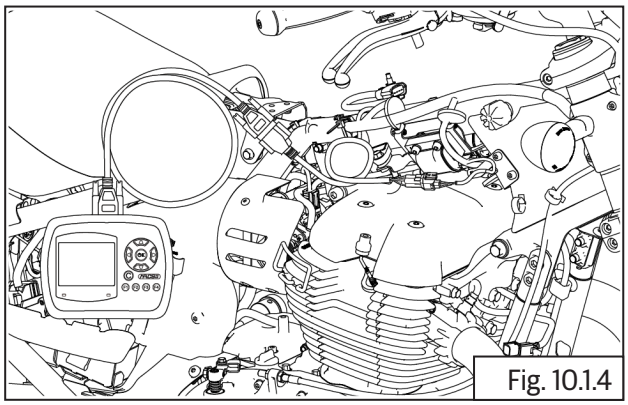

Fig. 10.1.4

2. Select the vehicle model name and select Bosch Engine Management System
3. Select the option Actuator
4. Select the required actuator and press F3 to actuate

- **Method of verification**

1. For fuel pump, when actuated, an audible sound can be heard for 5 seconds .

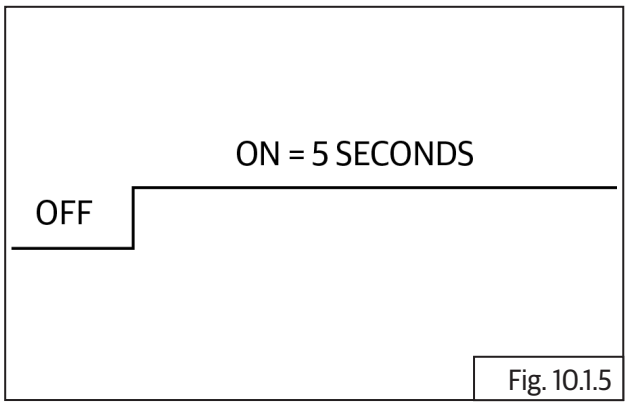

Fig. 10.1.5

2. Prior to actuation of injector, prime the fuel pump 3 times to build up sufficient pressure in fuel line. To ensure injectors are working properly, remove the throttle body from the intake manifold, connect all the injector couplers and actuate. When actuated, 3 pulses of fuel spray from the injector can be seen. Each injector can be actuated and checked individually

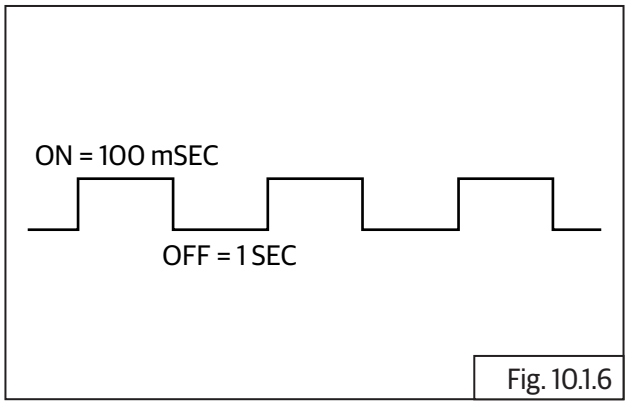

Fig. 10.1.6

3. Prior to the actuation of ignition coil, remove the suppressor cap and connect with an external spark plug and ground it to engine. Do not ground the ignition coil directly. When actuated, 3 sparks can be seen. Each ignition can be actuated and checked individually.

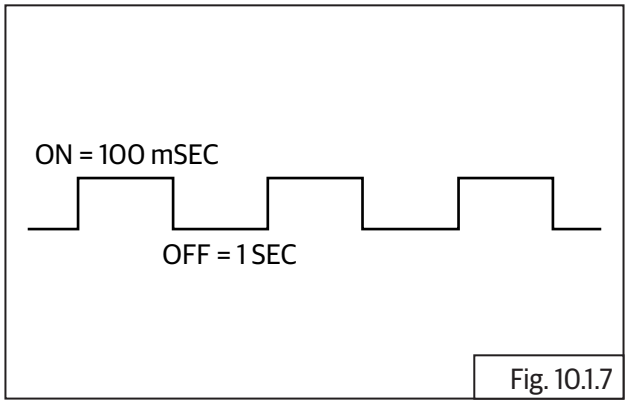

Fig. 10.1.7

4. To check O2 sensor heater, the sensor has to be removed from the exhaust pipe. When actuation is requested, the sensor will get heated up and this happens for 5 seconds.

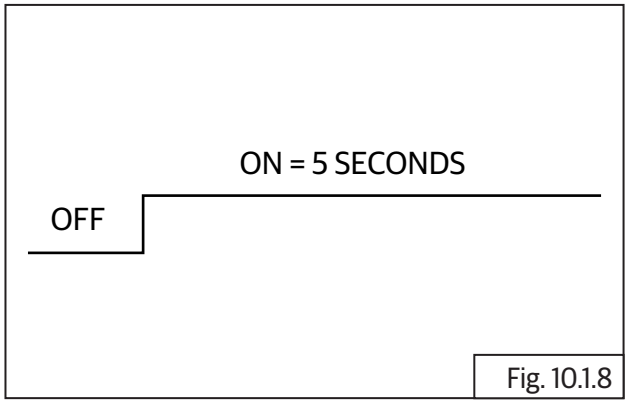

Fig. 10.1.8

5. When MIL is actuated, the bulb goes ON & OFF for 5 times.

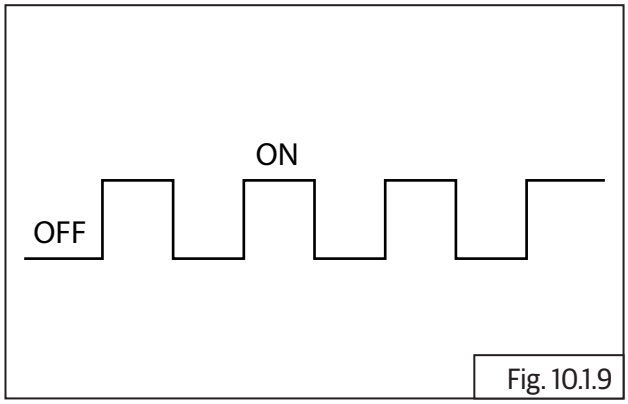

Fig. 10.1.9

6. Start and idle the engine before actuating IACV. If actuation command is given, one can observe the engine rpm rising up & falling down the target idle speed. Once actuation is completed, it settles back to target idle speed.

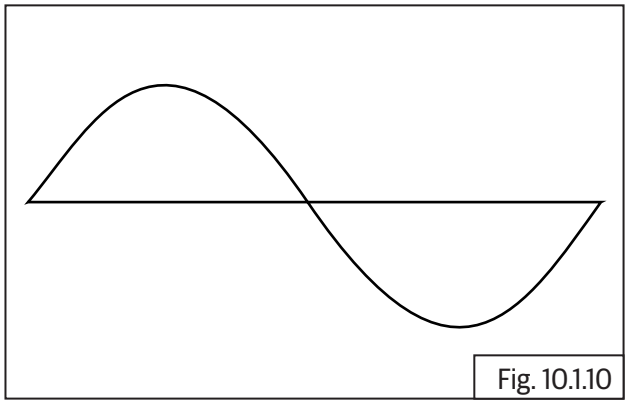

Fig. 10.1.10

7. When CPV is actuated, a pulsating sound can be observed. If not, the canister purge valve has to be manually touched to feel actuation.

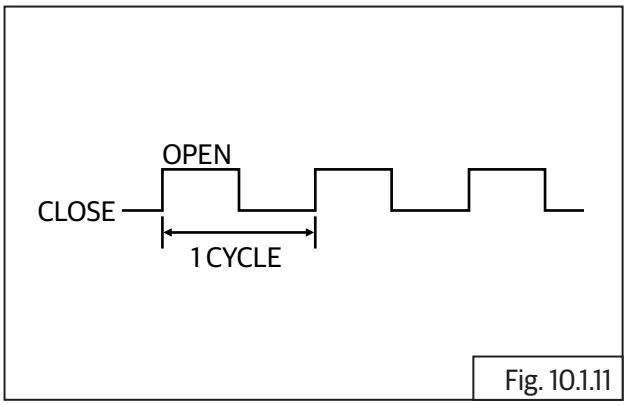

Fig. 10.1.11

8. SAI solenoid will get actuated for 20 cycles

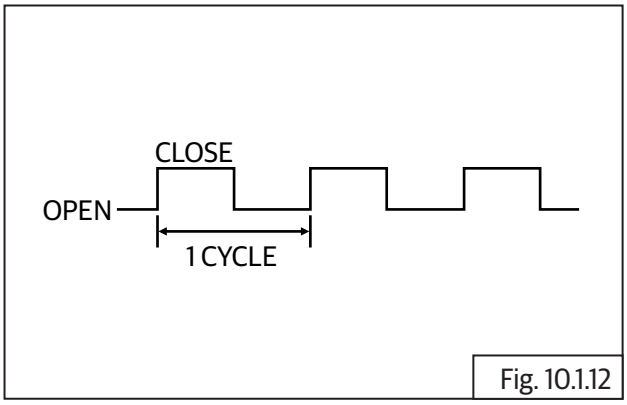

Fig. 10.1.12

9. Accessory relay gets actuated for 5 cycles.

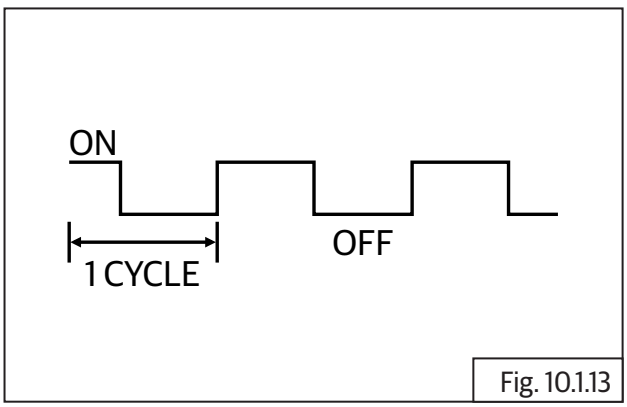

Fig. 10.1.13

10.1.40 - EMS DTC Codes

Sl. No.	EMS Pcode	COMPONENT	DESCRIPTION
1	P0030	O2 sensor (HEGO) Heater Bank 1 Sensor 1 (RH/ Clutch Side)	Cl Side HO2S Heater Control Circuit Open
2	P0031		Cl Side HO2S Heater Control Circuit Low
3	P0032		Cl Side HO2S Heater Control Circuit High
4	P1104		Cl Side Oxygen Sensor heater Plausibility
5	P0131	O2 sensor (HEGO) Signal Bank 1 Sensor 1 (RH/ Clutch Side)	Cl Side O2 Sensor Circuit Low
6	P0132		Cl Side O2 Sensor Circuit High
7	P0134		Cl Side O2 Sensor Circuit Open
8			CL_side Mixture To Lean
9	P0172		CL_Side Mixtrue to Rich
10	P2297		Cl Side O2 Sensor Out of Range During Deceleration
11			Cl Side O2 Sensor Circuit Range / Performance

Sl. No.	EMS Pcode	COMPONENT	DESCRIPTION
12	P0050	O2 sensor (HEGO) Heater Bank 2 Sensor 1 (LH/ Magneto Side)	Mag Side HO2S Heater Control Circuit Open
13			Mag Side HO2S Heater Control Circuit Low
14	P0052		Mag Side HO2S Heater Control Circuit High
15	P1105		Mag Side Oxygen Sensor heater Plausibility
16	P0151	O2 sensor (HEGO) Signal Bank 2 Sensor 1 (LH/ Magneto Side)	Mag Side O2 Sensor Circuit Low
17	P0152		Mag Side O2 Sensor Circuit High
18	P0154		Mag Side O2 Sensor Circuit Open
19	P0174		Mag_Side Mixtrue to Lean
20	P0175		Mag_Side Mixtrue to Rich
21	P2298		Mag Side O2 Sensor Out of Range During Deceleration
22	P2A03		Mag Side O2 Sensor Circuit Range / Performance

Sl. No.	EMS Pcode	COMPONENT	DESCRIPTION
23	P0106	Manifold Air Pressure sensor 1 (MAP) RH side - Clutch side	Cl Side Manifold Absolute Pressure Circuit Range / Performance / Stuck
24	P0107		Cl Side Manifold Absolute Pressure Sensor Circuit Low / Open
25	P0108		Cl Side Manifold Absolute Pressure Sensor Circuit High
26	P1109		Cl Side Manifold Absolute Pressure Sensor Out Of Range Diagnosis
27	P1106	Manifold Air Pressure sensor 2 (MAP) LH side - Generator side	Mag Side Manifold Absolute Pressure Circuit Range / Performance / Stuck
28	P1107		Mag Side Manifold Absolute Pressure Sensor Circuit Low / Open
29	P1108		Mag Side Manifold Absolute Pressure Sensor Circuit High
30	P3109		Mag Side Manifold Absolute Pressure Sensor Out Of Range Diagnosis
31	P0111	Intake Air Temperature Sensor (IAT)	Intake Air Temperature Sensor Circuit Range / Performance / Stuck
32	P0112		Intake Air Temperature Sensor Circuit Low
33	P0113		Intake Air Temperature Sensor Circuit High / Open
34	P1111		Intake Air Temperature Sensor – Out of Range Diagnostic

Sl. No.	EMS Pcode	COMPONENT	DESCRIPTION
35	P0121	Throttle Position Sensor (TP)	Throttle Position Sensor Circuit Out of Range
36	P0122		Throttle Position Sensor Circuit Low / Open Circuit
37	P0123		Throttle Position Sensor Circuit high
38	P0196	Engine Oil Temperature (TW) Sensor	Engine Oil Temperature Sensor Range / Performance / Plausibility
39	P0197		Engine Oil Temperature Sensor Circuit Low
40	P0198		Engine Oil Temperature Sensor Circuit High/ Open
41	P0298		Coolant Temperature _ Over - Temperature
42	P1196		Engine Oil Temperature Sensor Out Of Range
43	P0500	Vehicle Speed Sensor	Vehicle Speed Sensor Circuit Malfunction Front / Rear Sensor
44	P0219	Crank Sensor	Engine Over-Speed Detection
45	P0335		Crankshaft Position Sensor Error

Sl. No.	EMS Pcode	COMPONENT	DESCRIPTION
46	P0201	Fuel Injector Bank 1 Injector 1 (RH/ Clutch Side)	Cl Side Injector Circuit Open
47	P0261		Cl Side Injector Circuit Low
48	P0262		Cl Side Injector Circuit High
49	P0202	Fuel Injector Bank 2 Injector 1 (LH/ Magneto Side)	Mag Side Injector Circuit Open
50	P0264		Mag Side Injector Circuit Low
51	P0265		Mag Side Injector Circuit High
52	P0444	Canister Purge Solenoid	Canister Purge Valve Circuit Open
53	P0458		Canister Purge Valve Circuit Low
54	P0459		Canister Purge Valve Circuit High
55	P2300	Ignition Coil Bank 1 Coil 1 (RH/ Clutch Side)	Cl Side Ignition Coil Primary Control Circuit Low / Open
56	P2301		Cl Side Ignition Coil Primary Control Circuit High

Sl. No.	EMS Pcode	COMPONENT	DESCRIPTION
57	P2303	Ignition Coil Bank 2 Coil 1 (LH/ Magneto Side)	Mag Side Ignition Coil Primary Control Circuit Low / Open
58	P2304		Mag Side Ignition Coil Primary Control Circuit High
59	P0508	Idle Air Control	Idle Air Control System Circuit Low
60	P0509		Idle Air Control System Circuit High
61	P0562	Battery Voltage	Battery Voltage Low
62	P0563		Battery Voltage High
63	P0641	Sensor Supply 1	Sensor Supply 1 - Circuit Low / Open Circuit
64	P0643		Sensor Supply 1 - Circuit High
65	P0651	Sensor Supply 2	Sensor Supply 2 Circuit Low / Open Circuit
66	P0653		Sensor Supply 2 - Circuit High
67	P0616	Starter relay	Starter Relay Circuit Low
68	P0617		Starter Relay Circuit High

Sl. No.	EMS Pcode	COMPONENT	DESCRIPTION
69	P0627	Fuel Pump relay	Electric Fuel Pump Relay Circuit Open
70	P0628		Electric Fuel Pump Relay Circuit Low
71	P0629		Electric Fuel Pump Relay Circuit High
72	P1630	Roll Over Sensor	Roll Over Sensor Circuit Low
73	P1631		Roll Over Sensor Circuit High / Open
74	P1641	Headlamp relay	Headlight Relay Circuit Open
75	P1642		Headlight Relay Short Circuit To Ground
76	P1643		Headlight Relay Short Circuit To Battery terminal Positive / Control Circuit High
77	P0915	Gear Position Sensor	Gear Position Sensor out of range
78	P0916		Gear Position Sensor Circuit low
79	P0917		Gear Position Sensor Circuit High / Open

Sl. No.	EMS Pcode	COMPONENT	DESCRIPTION
80	P1633	Side Stand Switch	Side Stand Switch Circuit Low
81	P1634		Side Stand Switch Circuit High / Open
82	P1636	Neutral LED	Neutral LED Circuit Low
83	P1637		Neutral LED Circuit High
84	P1638	Accessory Relay	Accessory Relay Circuit Open
85	P1639		Accessory Relay Circuit Low
86	P1640		Accessory Relay Circuit High
87	P0301	Engine Misfire Type A / B4 Cylinder 1 (RH – Clutch side	Cylinder 1 Misfire Detected
88	P0302	Engine Misfire Type A / B4 Cylinder 2 (LH – Generator side	Cylinder 2 Misfire Detected
89	P0650	MIL	"MIL Circuit Malfunction "
90	U0009	CAN bus	"CAN BUS Short Circuit / (CAN Circuit Malfunction)"
91	U0121	CAN Communication	Lost Communication with ABS module

EMS ADAPTATION PROCEDURE

The following procedure to be followed when if any change in the EMS sensors or fuel type

Step 1 - Check for Engine Oil Temperature (EOT) at start is less than **40˚C**.

Step 2 - Start and allow the engine to idle and leave it undisturbed till the Engine Oil Temperature reaches **115˚C**.(Time required for the EOT to reach **115˚C** is **30 minutes** approximately).

Step 3 - Once Engine Oil Temperature reaches **115˚C**, turn "**OFF**" the ignition key and **DO NOT** turn it "**ON**" for 120 seconds.

ELECTRICAL SYSTEM

CONTENTS PAGE

Contents

11. Electrical System..... 659

11.1 Battery Dismantling..... 659

11.1.1 Battery Terminals..... 659
11.1.2 Battery Tray..... 660
11.1.3 RR Unit..... 661
11.1.4 Starter Solenoid..... 662
11.1.5 ECU Module..... 662

11.2 Headlamp Dismantling..... 663

11.2.1 Headlamp Reflector from Housing..... 663
11.2.2 Connectors and Sensors from Headlamp Housing..... 664
11.2.3 Headlamp Housing from Holder LH & RH..... 664
11.2.4 Front Trafficators from Headlamp Holder..... 665
11.2.5 Cluster Unit..... 666
11.2.6 Tripper Unit..... 666
11.2.7 Ignition Switch Cum Steering Lock..... 667

11.3 Tail Lamp Dismantling..... 668

11.3.1 Tail Lamp..... 668
11.3.2 License plate illumination lamp Dismantling..... 669
11.3.3 Direction Trafficators - Rear..... 669
11.3.4 Trafficator bulb - Front..... 670
11.3.5 Roll Over Sensor..... 671

11.4 Horn Dismantling..... 671

11.5 Complete Wiring Harness Removal..... 672

Inspection..... 674

Assembly..... 675

11.6 Complete Wiring Harness Assemble..... 675

11.7 Horn Assembly..... 678

11.8 Tail Lamp Assembly..... 678

11.8.1 Roll Over Sensor..... 678
11.8.2 Trafficator bulb - Front..... 679

CONTENTS PAGE

11.8.3 Direction Trafficators - Rear 679
11.8.4 License plate illumination lamp Assembly 680
11.8.5 Tail Lamp 681
11.9 Headlamp Assembly 682
11.9.1 Ignition Switch Cum Steering Lock 682
11.9.2 Tripper Unit 682
11.9.3 Cluster Unit 683
11.9.4 Front Trafficators into Headlamp Holder 684
11.9.4 Headlamp Housing into Holder LH & RH 684
11.9.6 Connectors and Sensors into Headlamp Housing 685
11.9.7 Headlamp Reflector into Housing 686
11.10 Battery Assembly 687
11.10.1 ECU Module 687
11.10.2 Starter Solenoid 687
11.10.3 RR Unit 688
11.10.4 Battery Tray 688
11.10.5 Battery Terminals 689

11. Electrical System

11.1 Battery Dismantling

11.1.1 Battery Terminals

- Remove the Side panel RH
- Ensure Ignition and stop switch are in OFF position before disconnecting battery cables.
- Refer general information (section 1.5.8) for battery connection and disconnection procedure.

NOTE
• *If battery lead is difficult to disconnect due to rust or corrosion of battery terminals, pour recommended battery terminal cleaning solution on terminals and then try to disconnect.*

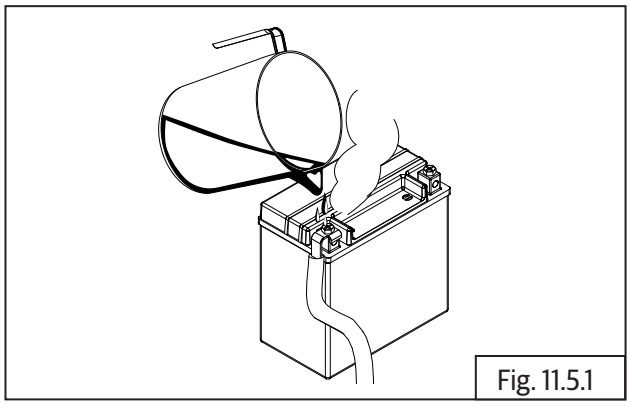

Fig. 11.5.1

- Pull battery strap (belt) **(a)** downwards and release strap lock from battery strap bracket.

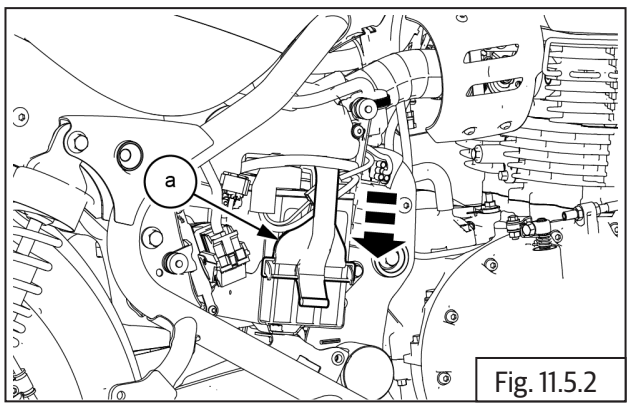

Fig. 11.5.2

- Disconnect the negative (- ve) coupler **(a)**.

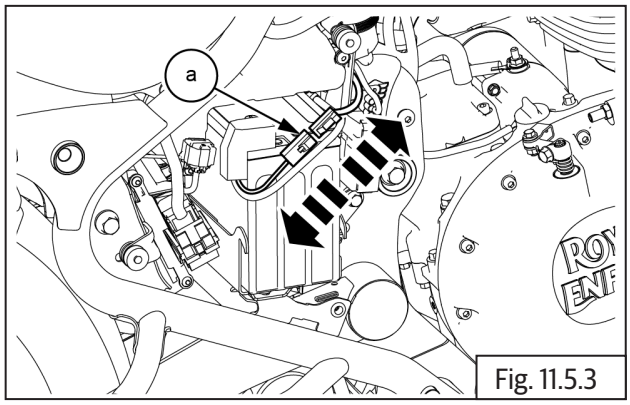

Fig. 11.5.3

	10 mm Double end spanner

- Disconnect battery negative (- ve) terminal bolt **(a)**.

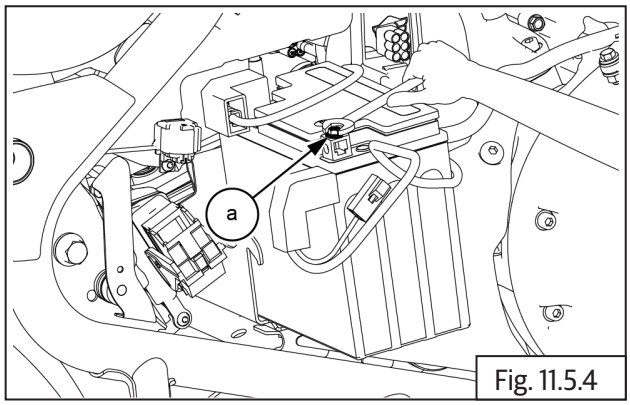

Fig. 11.5.4

	10 mm Double end spanner

- Slightly slide it outward the battery **(a)** for remove (+ ve) terminal bolt.

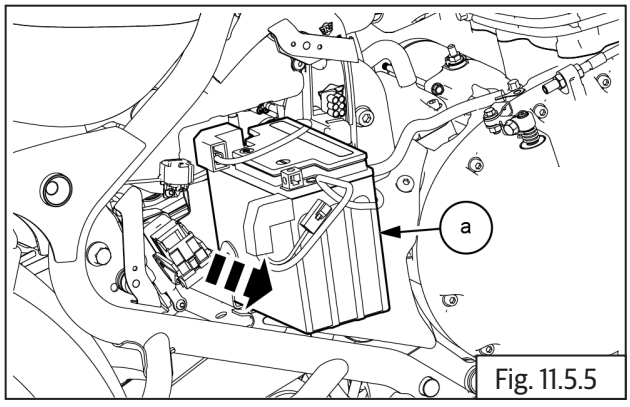

Fig. 11.5.5

- Disconnect battery positive (+ ve) terminal bolt **(a)**.

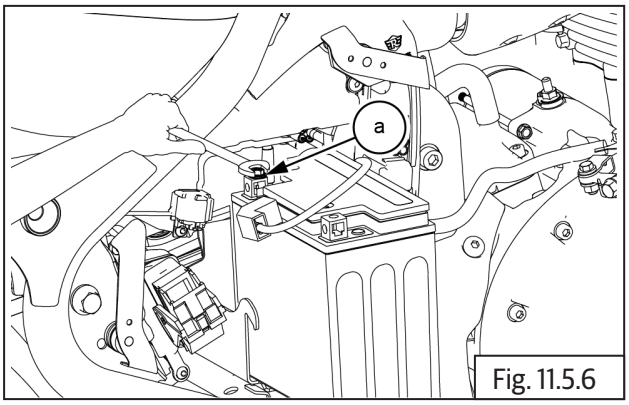

Fig. 11.5.6

	10 mm Double end spanner

- Remove battery **(a)** from tray.

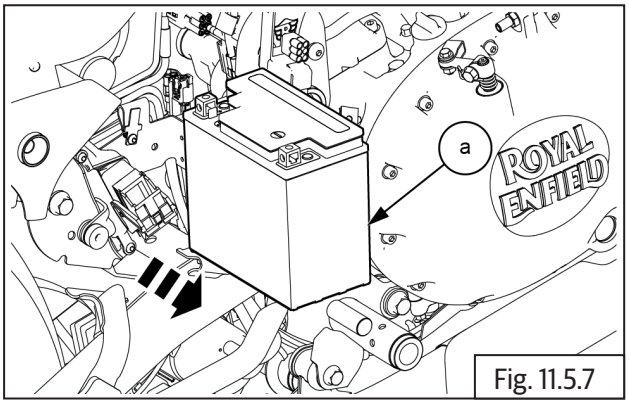

Fig. 11.5.7

11.1.2 Battery Tray

- Remove the Battery.
- Remove the Side panel RH.
- Remove the Side panel LH.
- Loosen and remove 1 Nos. Hex head flange bolt **(M6) (a)** from battery tray **(b)**.

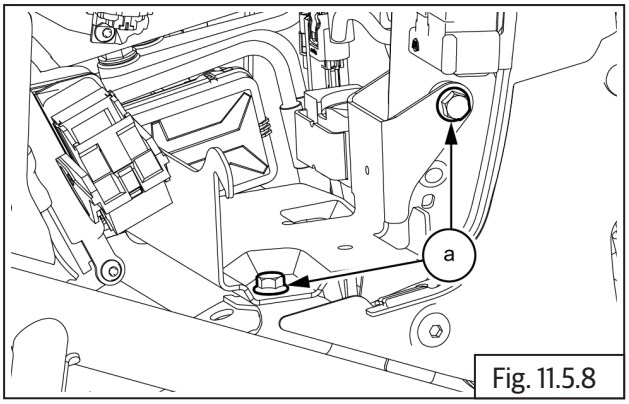

Fig. 11.5.8

	10 mm Socket and Ratchet

- Loosen and remove 2 Nos. Hex head flange bolt **(M6) (a)** from LHS battery tray.

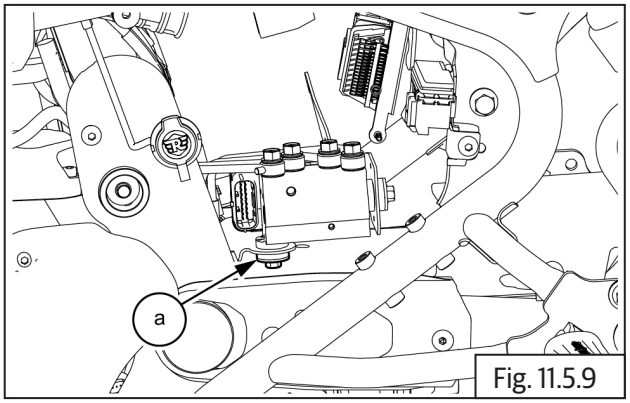

Fig. 11.5.9

	10 mm Socket and Ratchet

- Remove battery tray **(a)** from chassis frame.

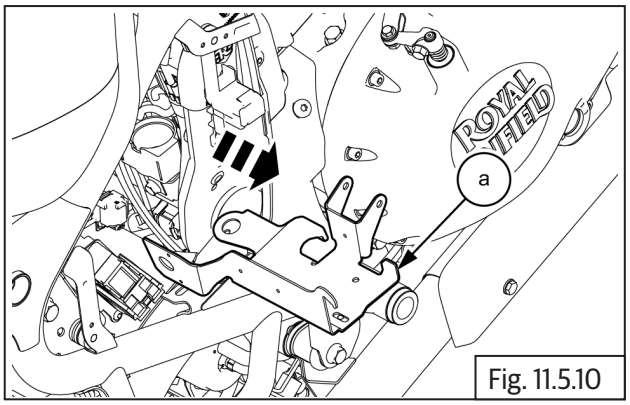

Fig. 11.5.10

11.1.3 RR Unit

- Disconnect electrical connector **(a)** from RR unit .

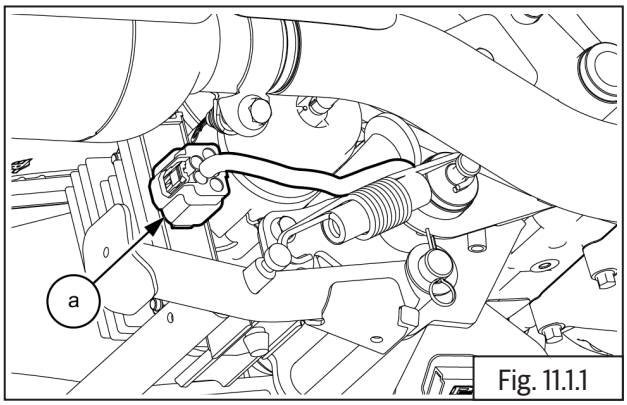

Fig. 11.1.1

- Loosen and remove Hex flange head nuts 2 Nos **(M6) (a)** from RR unit.
- Remove RR unit from canister bracket.

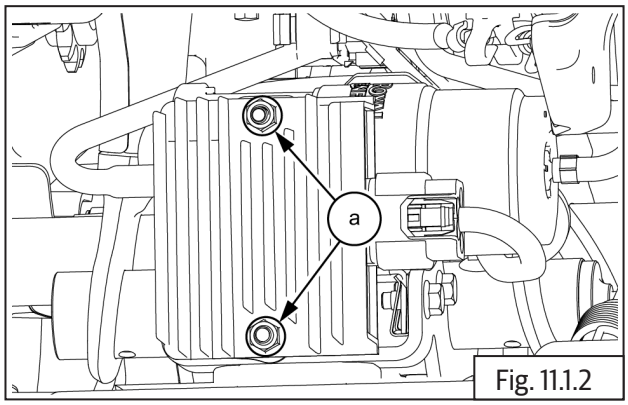

Fig. 11.1.2

	10 mm Socket with Ratchet

11.1.4 Starter Solenoid

- Loosen and remove the nut from self motor solenoid main cable **(a).**

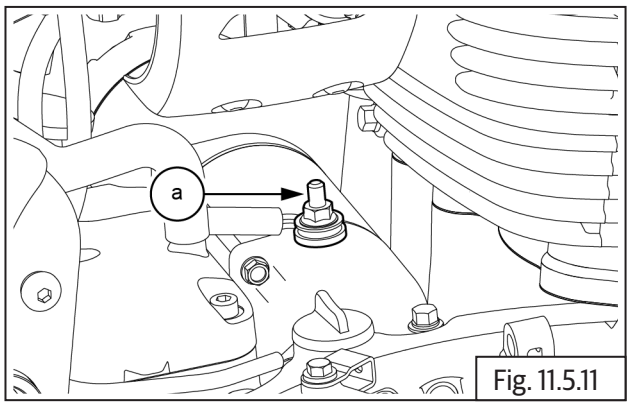

Fig. 11.5.11

	8 mm Socket and Ratchet

- Gently slide out solenoid coil **(a)** from battery bracket along with battery positive (+)cable.

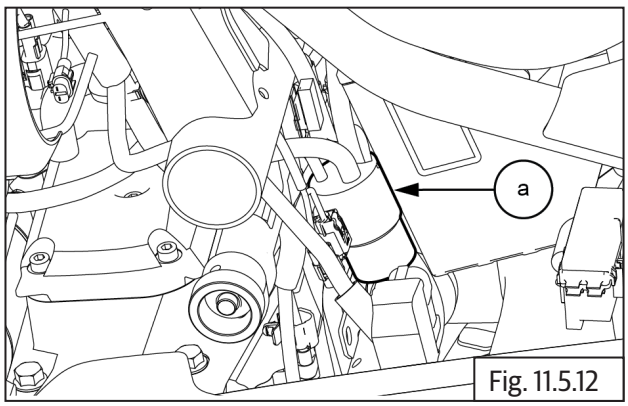

Fig. 11.5.12

11.1.5 ECU Module

- Remove the Side panel RH.
- Disconnect ECU connector **(a)**

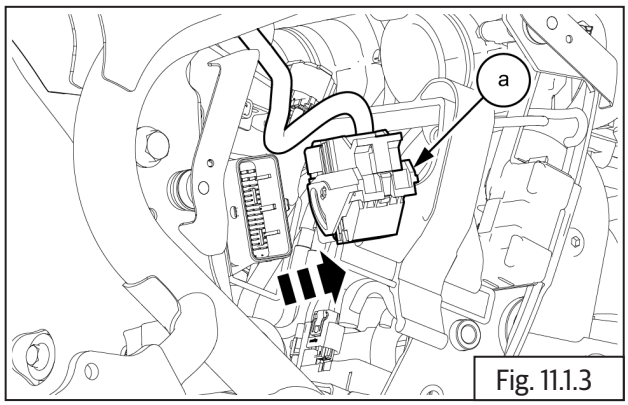

Fig. 11.1.3

- Remove the 2Nos torx screw **(a)** with retaining plate from ECU.

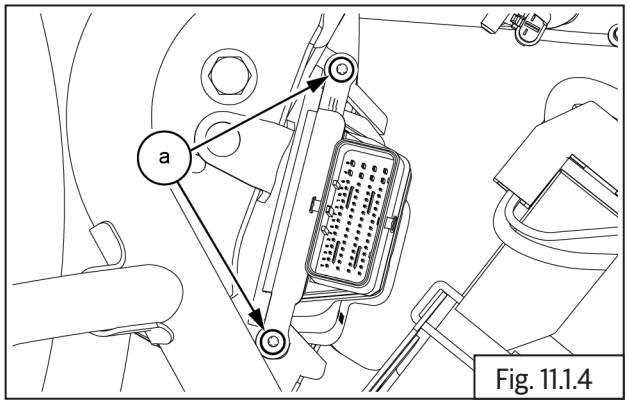

Fig. 11.1.4

	20 mm Torx socket with Ratchet

- Remove the ECU **(a)** from chassis frame.

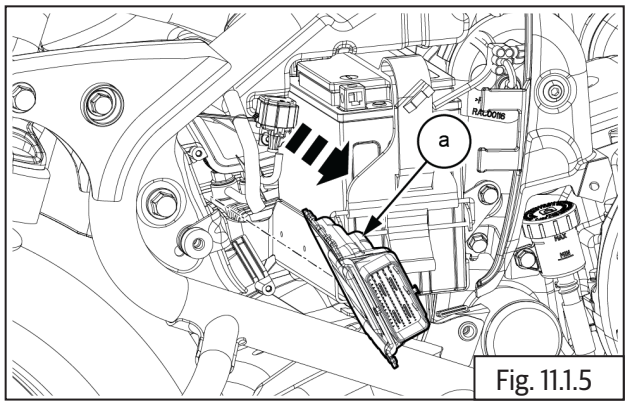

Fig. 11.1.5

11.2 Headlamp Dismantling

11.2.1 Headlamp Reflector from Housing

NOTE
• *Ensure ignition switch and stop switch in off condition*

⚠ CAUTION
Support the Headlamp assembly carefully.

- Loosen and remove 4Nos button head bolts **(a)** washers **(b)** from headlamp cover.

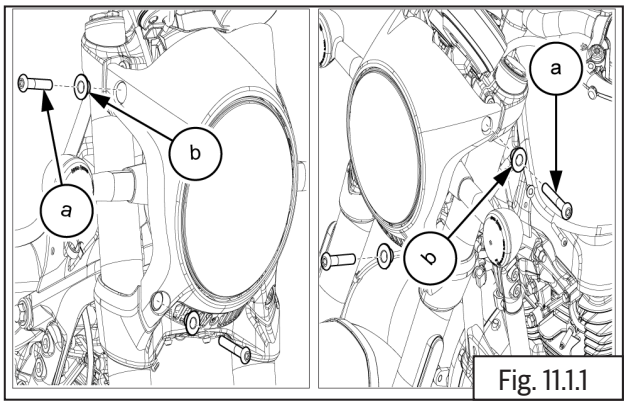

Fig. 11.1.1

	4 mm Allen socket

- Slide out headlamp cover with head lamp assembly **(a)** from headlamp cowl.

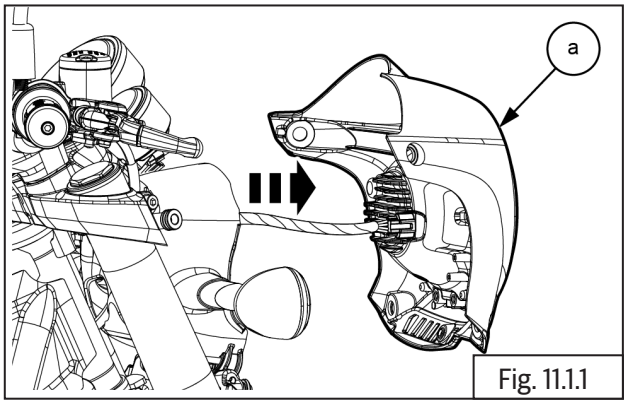

Fig. 11.1.1

- Hold headlamp head carefully and disconnect headlamp connector **(a)** .

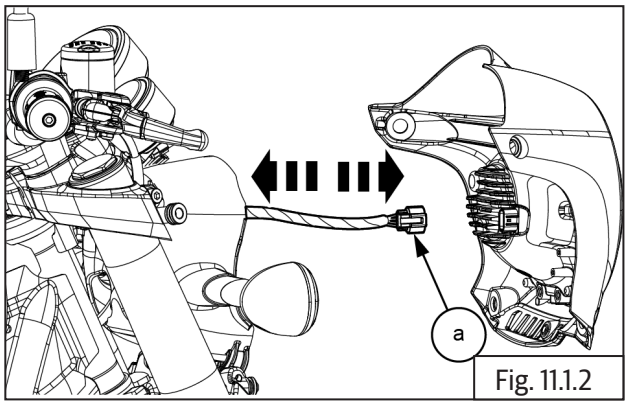

Fig. 11.1.2

- Remove the 4Nos spacers **(a)** from headlamp cover.

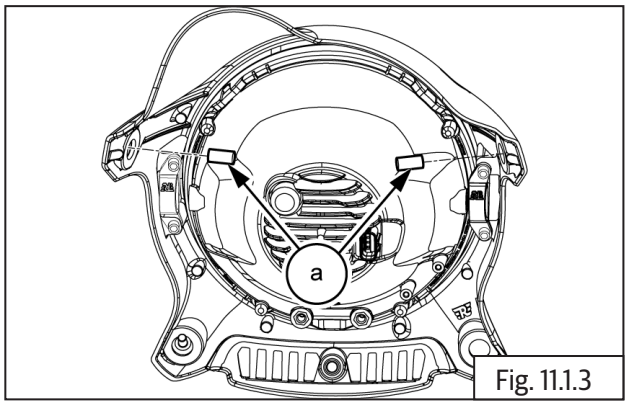

Fig. 11.1.3

- Loosen and remove 2 Nos. Hex head bolts **(a)** from headlamp adjuster bracket.

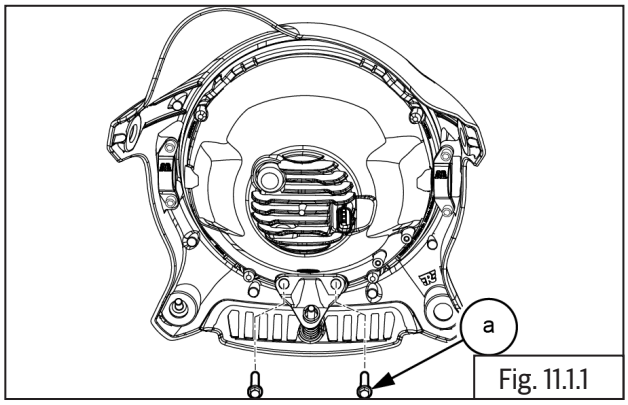

Fig. 11.1.1

	8 mm Socket and Ratchet

- Loosen and remove 4 Nos. cap bolts **(M5) (a)** from headlamp holder.

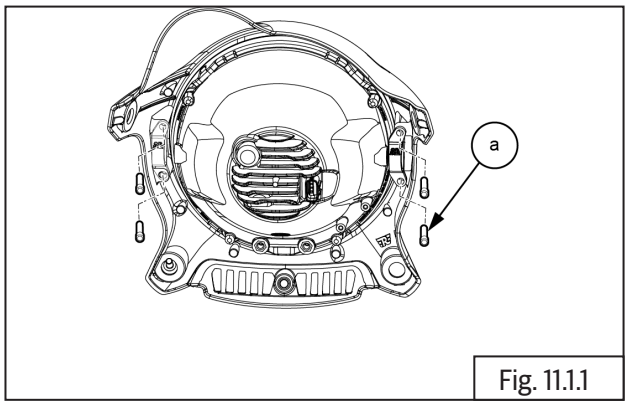

Fig. 11.1.1

	4 mm Allen socket

- Remove the headlamp assembly **(a)** from headlamp cover **(b)**.

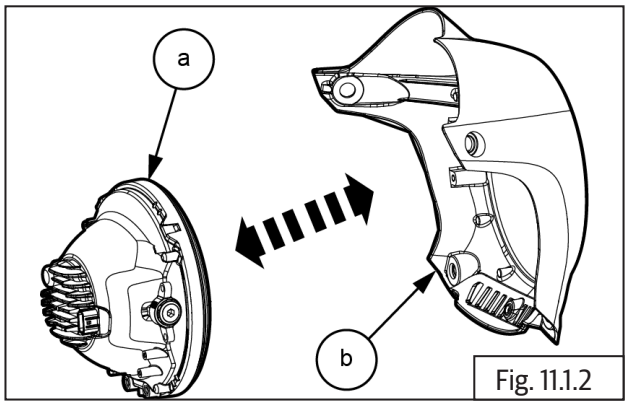

Fig. 11.1.2

⚠ WARNING

The headlamp can be extremely hot. Do not remove while headlamp are hot.

- Remove the LHS and RHS headlamp holder below sequence.

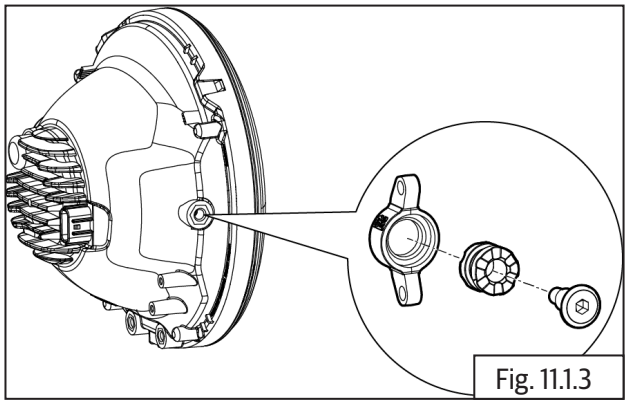
Fig. 11.1.3

	5 mm Allen socket

11.2.2 Connectors and Sensors from Headlamp Housing

- Remove the Headlamp Reflector from Housing :
- Remove the torx screw **(a)** from connector plate.
- Remove connector plate from head lamp housing.

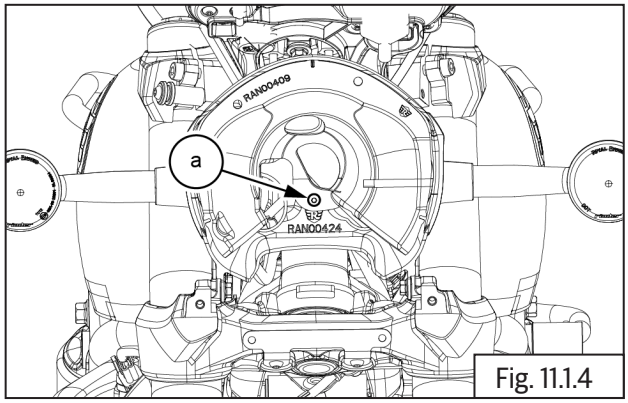

Fig. 11.1.4

	20 mm Torx socket with Ratchet

- Disconnect the below mentioned connector from head lamp housing.
- **(1)** Main Harness **(2)** Accessory Item **(3)** RH Indicator **(4)** RH switch cube **(5)** RH switch cube **(6**) front brake switch **(7)** Clutch switch **(8)** Info switch **(9)** Ignition switch **(10)** LH switch cube **(11)** LH switch cube.
- Mating parts of connectors 1 to 5 to be pulled through Hole **(a)**.
- Mating parts of connectors 6 to 11 to be pulled through Hole **(b)**.

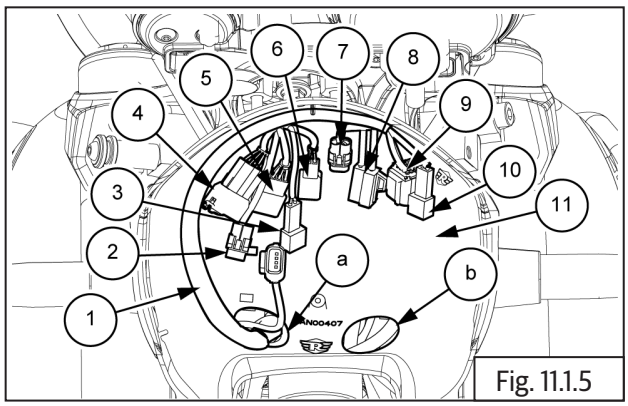

Fig. 11.1.5

11.2.3 Headlamp Housing from Holder LH & RH

- Ensure all electrical connectors are removed.
- Loosen and remove 2 Nos. Hex head flange bolts **(M6) (a)** LHS and RHS bottom of headlamp housing.

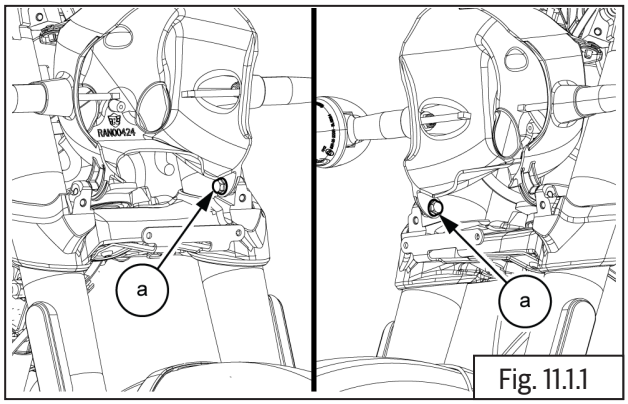

Fig. 11.1.1

	10 mm Socket and Ratchet

- Remove head lamp housing **(a)** from holder.

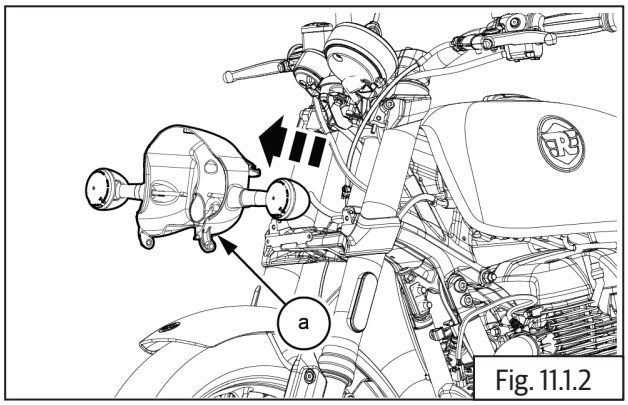

Fig. 11.1.2

11.2.4 Front Trafficators from Headlamp Holder

Dismantling

- Remove the Headlamp Reflector from Housing.
- Loosen and remove flange nut 1 Nos **(M8) (a)** from RHS trafficator.

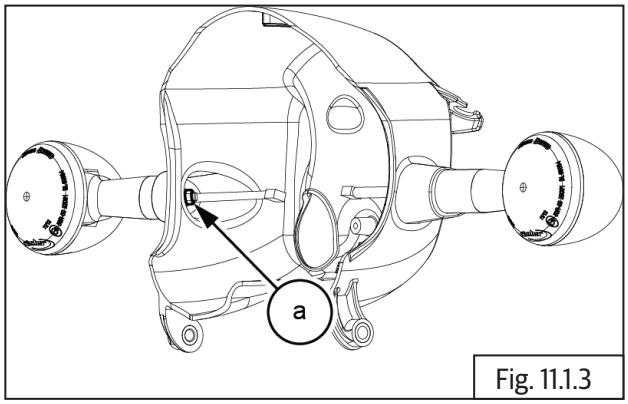

Fig. 11.1.3

	10 mm Socket and Ratchet

- Remove the RHS trafficator **(a)** from headlamp housing.

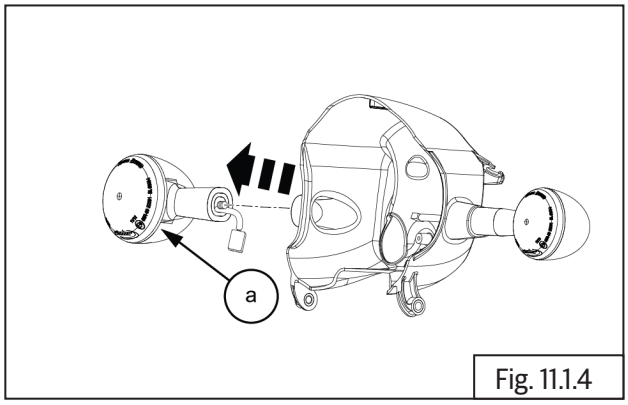

Fig. 11.1.4

- Similarly remove to LHS trafficator.

11.2.5 Cluster Unit

- Disconnect instrument coupler **(a).**

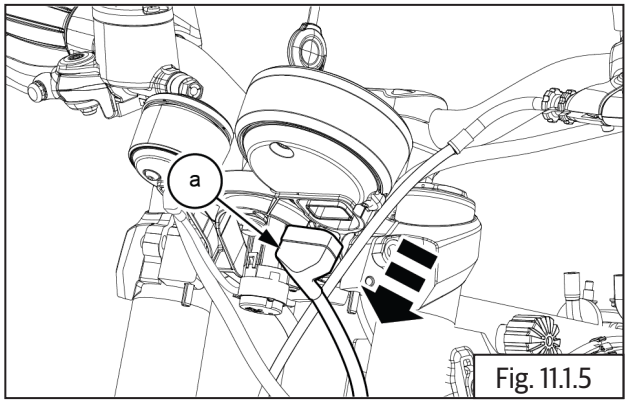

Fig. 11.1.5

- Loosen and remove 3 Nos button bolts with washers **(M5) (a)** and **(b)** from instrument bracket.

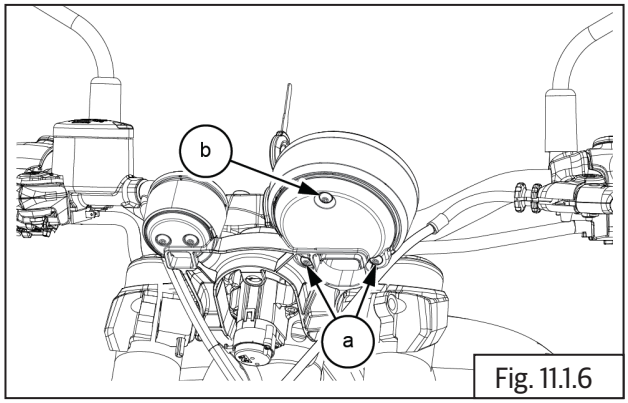

Fig. 11.1.6

	3 mm Allen socket

- Remove cluster **(a)** from bracket.

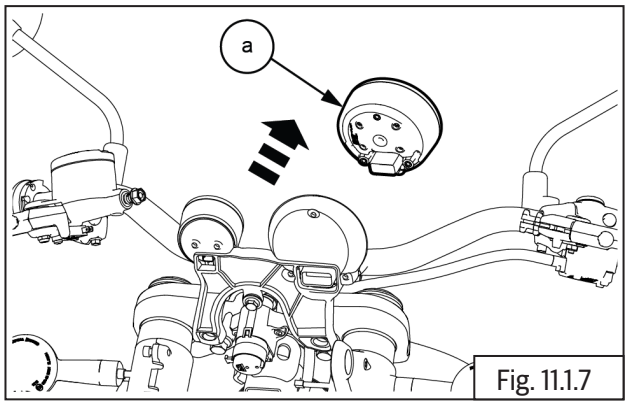

Fig. 11.1.7

11.2.6 Tripper Unit

- Disconnect tripper coupler **(a).**

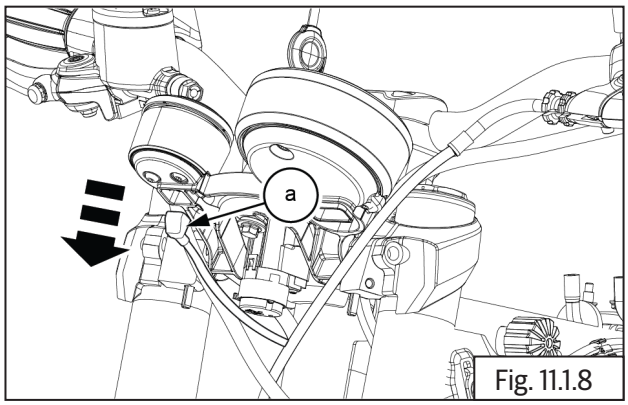

Fig. 11.1.8

- Loosen and remove 2 Nos button bolts **(M5) (a)** from instrument bracket.

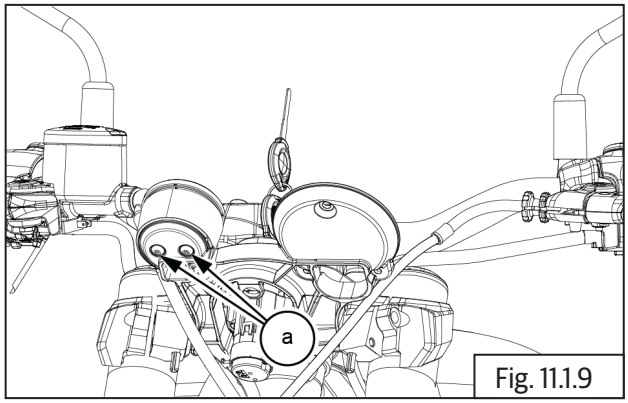

Fig. 11.1.9

	3 mm Allen socket

- Remove tripper **(a)** from bracket.

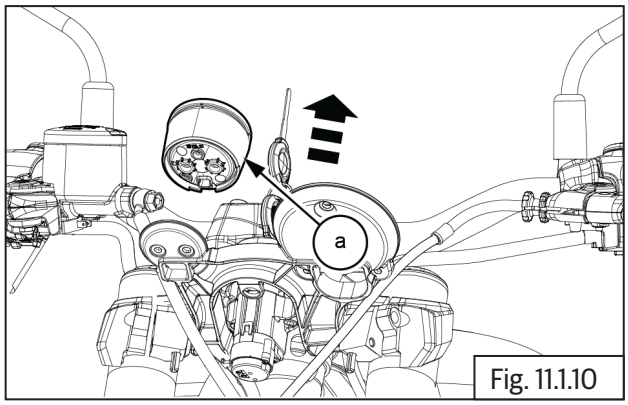

Fig. 11.1.10

- Loosen and remove 3 Nos Hex head flange bolts **(M6) (a)** from instrument bracket.

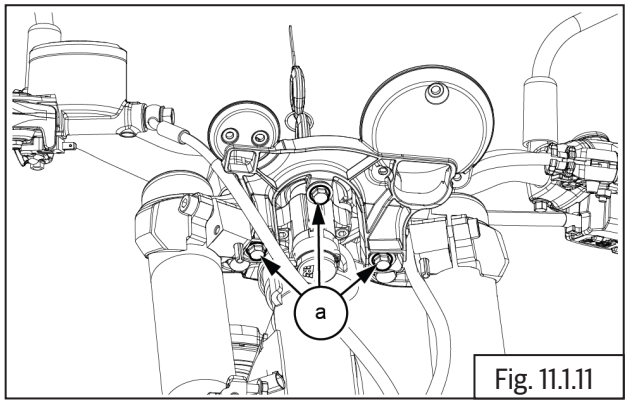

Fig. 11.1.11

	10 mm socket and Ratchet

- Remove washer and grommet with sleeve from instrument bracket

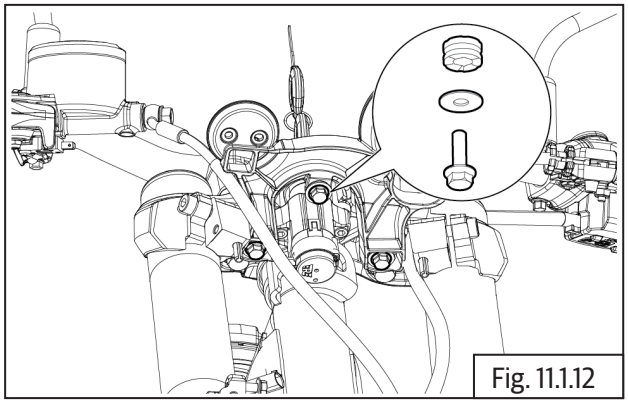

Fig. 11.1.12

- Remove instrument bracket **(a)** from front assembly.

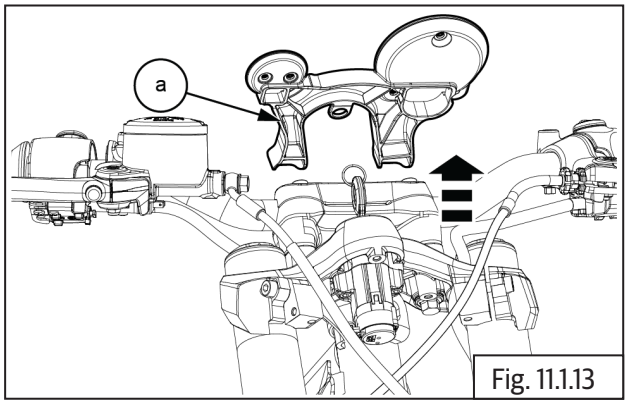

Fig. 11.1.13

11.2.7 Ignition Switch Cum Steering Lock

- Remove 2 Nos. cap bolts **(M6) (a)** located below key set.

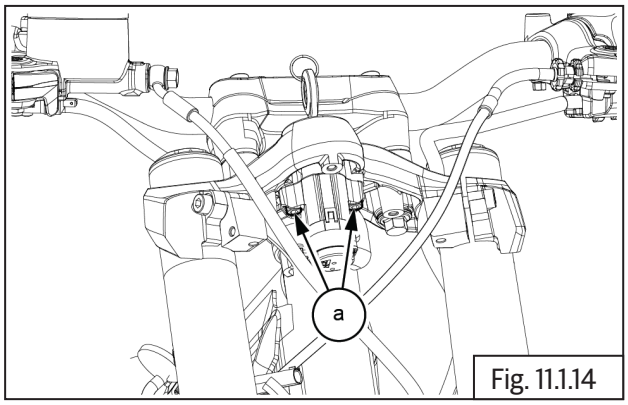

Fig. 11.1.14

	5 mm Allen socket with Ratchet

- Gently remove ignition key set **(a)**.

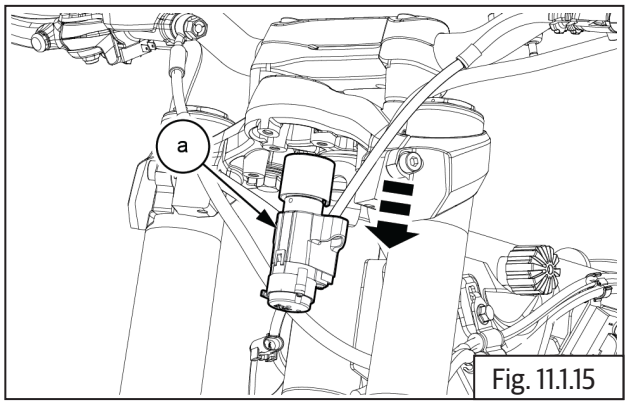

Fig. 11.1.15

11.3 Tail Lamp Dismantling

11.3.1 Tail Lamp

NOTE
• *Handle tail lamp assembly with care. Avoid over tightening of lens screws.*

- Loosen and remove Hex nut 3Nos **(M6) (a)** from mudflap.

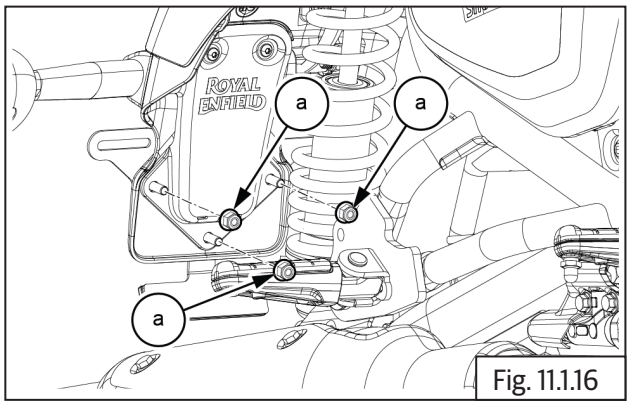

Fig. 11.1.16

	10 mm Socket with Ratchet

- Loosen and remove 2 Nos torx screws **(a)** from connector cover **(b)**.

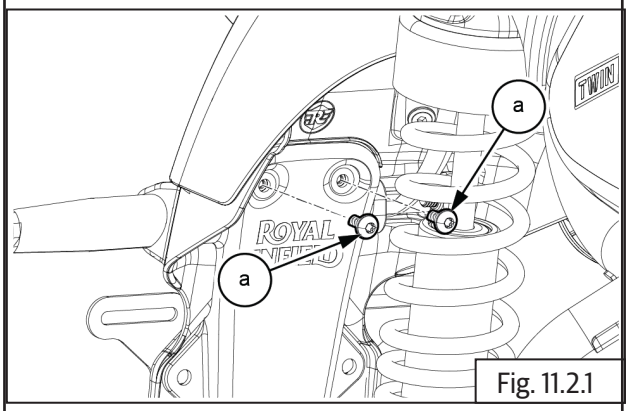

Fig. 11.2.1

	3 mm Torx socket with Ratchet

- Remove the connector cover **(b)** from rear mudflap.

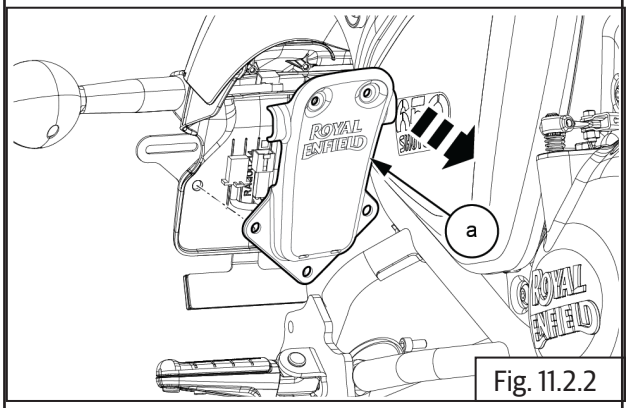

Fig. 11.2.2

- Disconnect the tail lamp connector **(a)**.

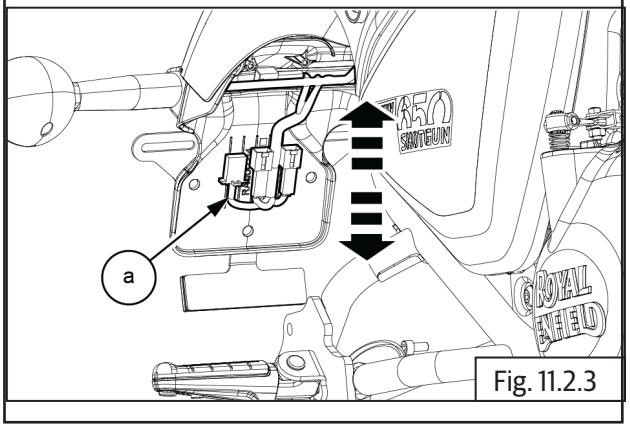

Fig. 11.2.3

- Loosen and remove 3 Nos bolts **(M6) (a)** with top hat sleeves **(b)** from rear tail lamp .

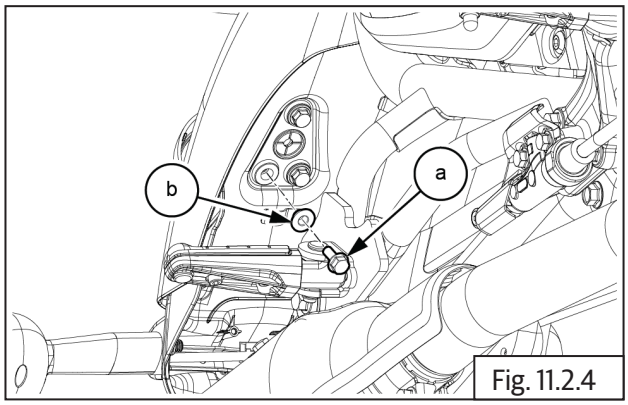

Fig. 11.2.4

	10 mm Hex socket with Ratchet

- Remove the tail lamp **(a)** with rubber boot **(b)** from rear mudguard.

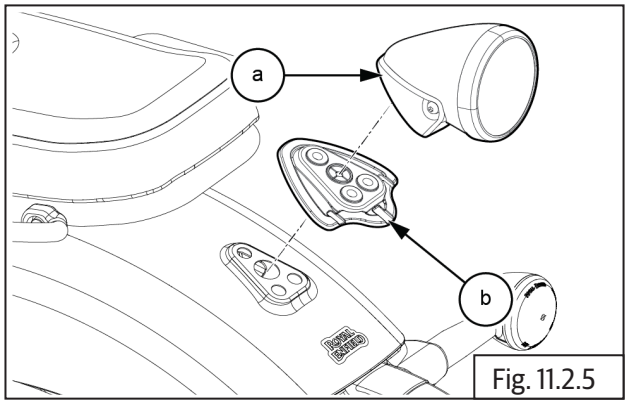

Fig. 11.2.5

11.3.2 License plate illumination lamp Dismantling

- Disconnect the license plate illumination lamp connector **(a)**.

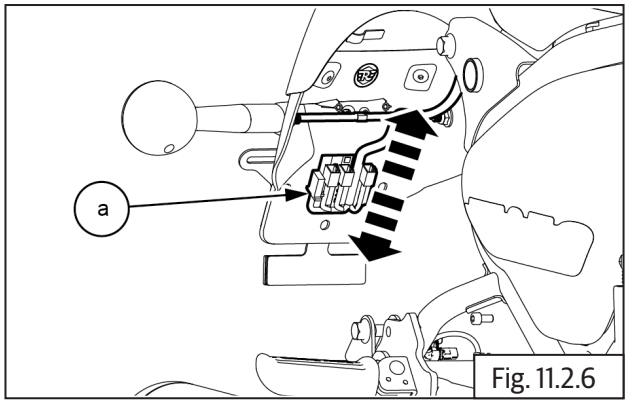

Fig. 11.2.6

- Loosen and remove 2 Nos cap bolts from license plate illumination lamp **(a)** .

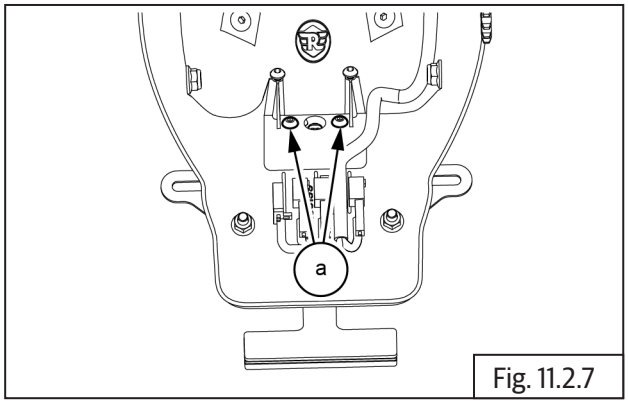

Fig. 11.2.7

	4 mm Allen socket with ratchet

- Remove the license plate illumination lamp **(a)** from rear mudguard.

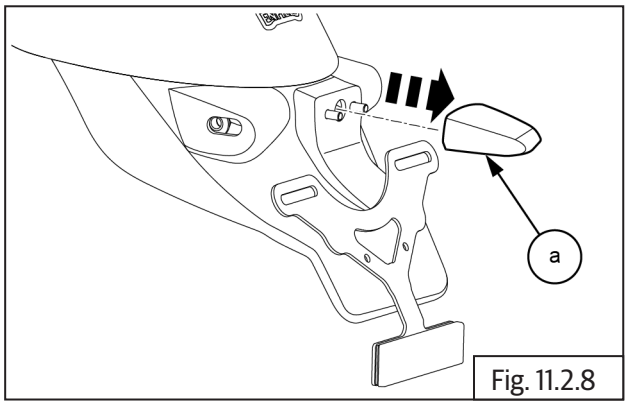

Fig. 11.2.8

11.3.3 Direction Trafficators - Rear

- Loosen and remove Hex nut 3Nos **(M6) (a)** from mudflap.

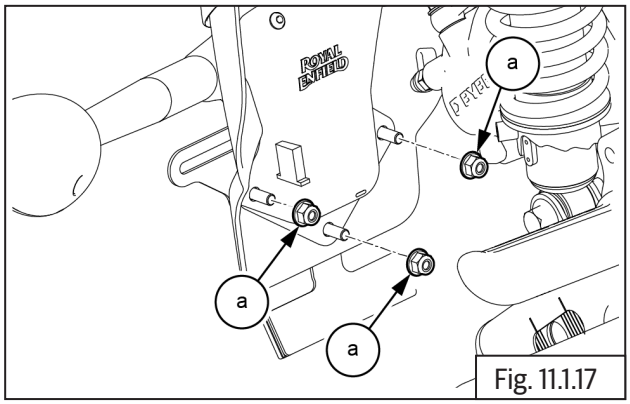

Fig. 11.1.17

	10 mm Socket with Ratchet

- Loosen and remove 2 Nos torx screws **(a)** from connector cover .

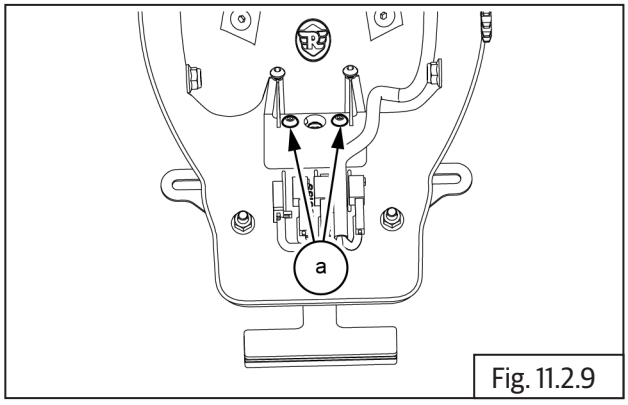

Fig. 11.2.9

	3 mm Torx socket with Ratchet

- Remove the connector cover **(b)** from rear mudflap.

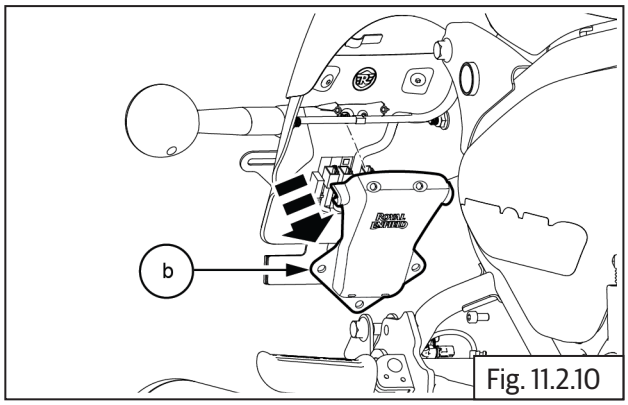

Fig. 11.2.10

- Disconnect the rear trafficator connectors **(a)**.

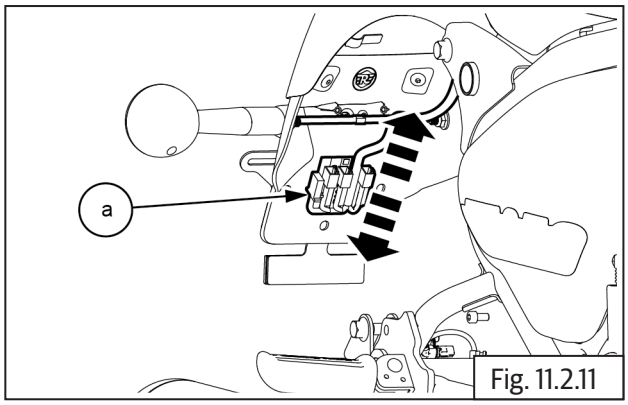

Fig. 11.2.11

- Loosen and remove hex nut **(M8) (a)** from rear trafficator .

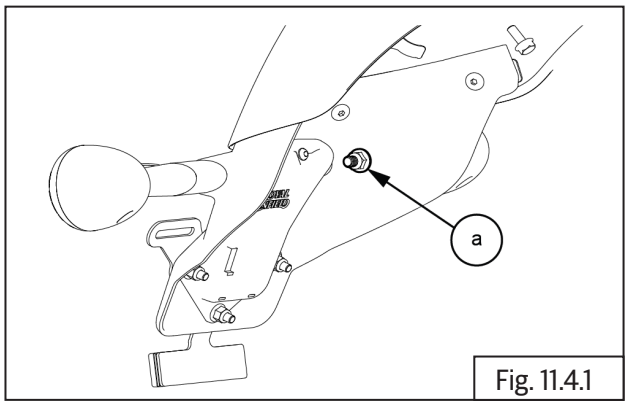

Fig. 11.4.1

	12 mm Ring spanner

- Remove rear trafficator **(a)** from rear mudguard.

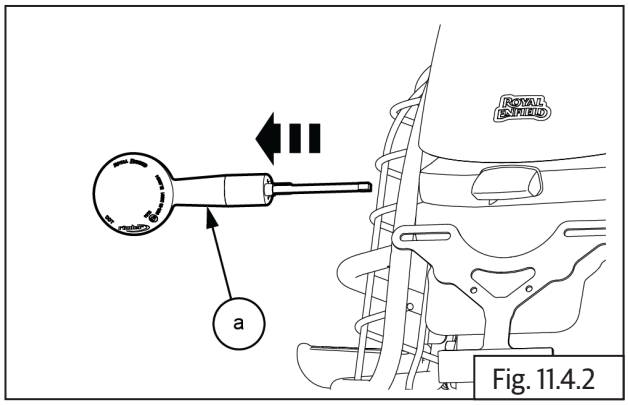

Fig. 11.4.2

- Repeat the same step to rear RH trafficator.

11.3.4 Trafficator bulb - Front

- Loosen and remove screw **(a)** from trafficator assembly.

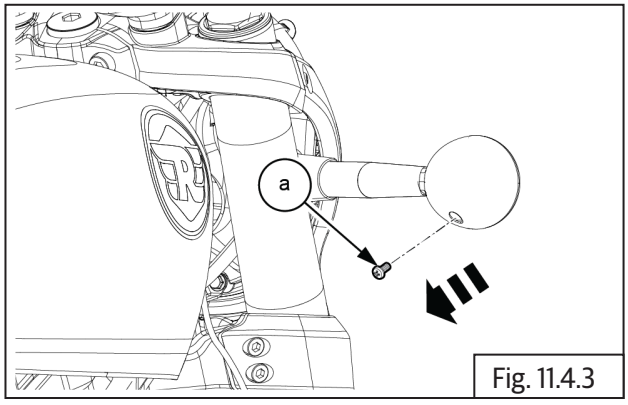

Fig. 11.4.3

	Screw driver

- Remove the lens cover and grommet from trafficator assembly

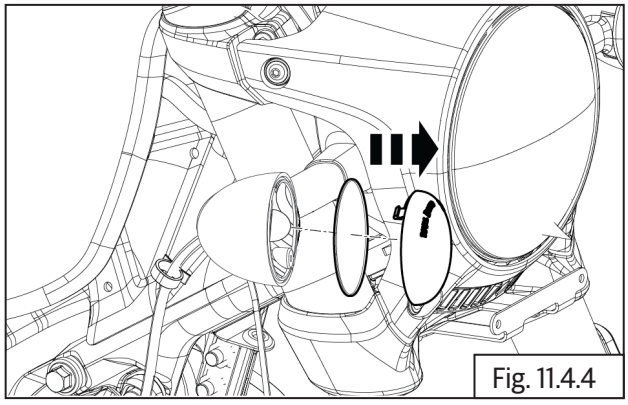
Fig. 11.4.4

- Gently press and turn it anti clockwise to remove bulb from holder.

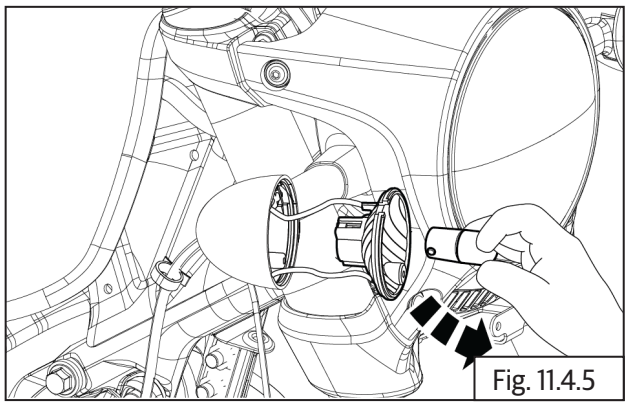
Fig. 11.4.5

- Repeat the same step to other all side.

11.3.5 Roll Over Sensor

- Loosen and remove 3 Nos button head bolts **(M6) (a)** from upper infill panel.
- Remove upper infill panel **(b)** from chassis frame.

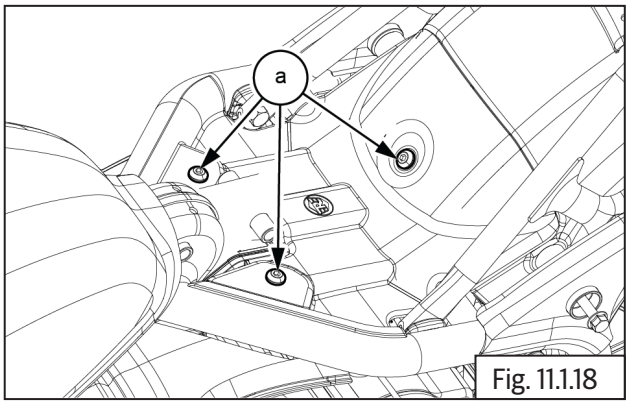

Fig. 11.1.18

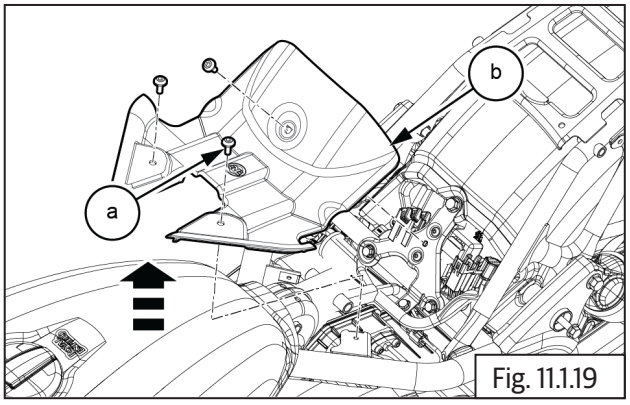

Fig. 11.1.19

	5mm Allen key

- Disconnect roll over sensor connector **(a)**.

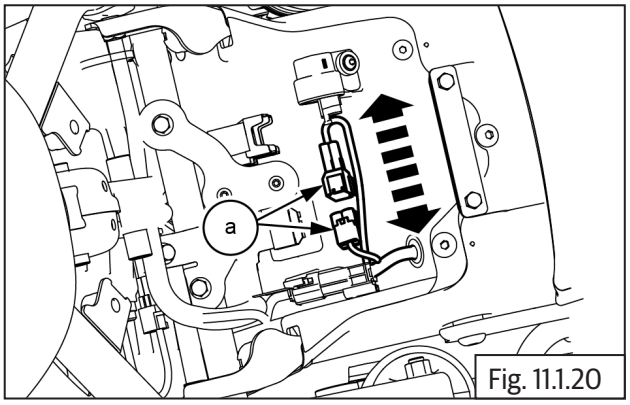

Fig. 11.1.20

- Remove the roll over sensor by removing screw **(a).**

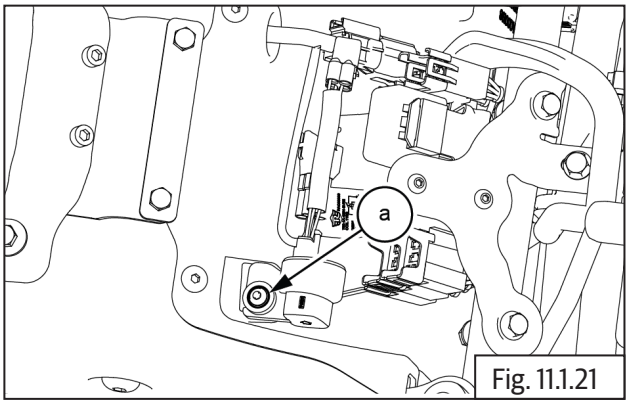

Fig. 11.1.21

	20 mm Torx socket with Ratchet

11.4 Horn Dismantling

- Disconnect coupler **(a)** from horn.

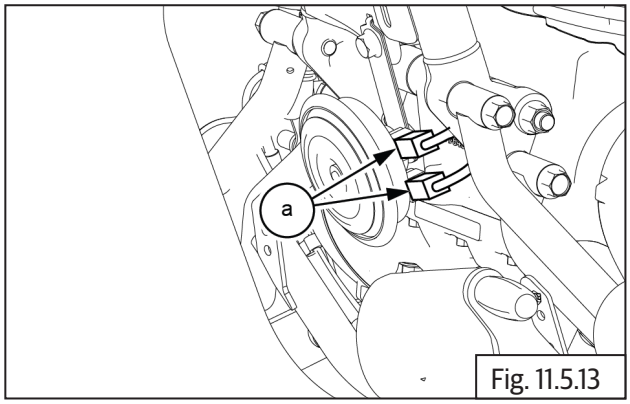

Fig. 11.5.13

- Loosen and remove Hex flange bolt and nut **(M8) (a)** to remove RH horn bracket.

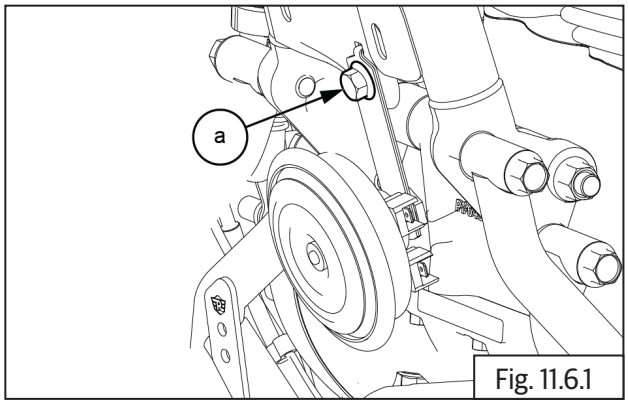

Fig. 11.6.1

	12 mm Socket with Ratchet 12 mm Ring spanner

11.5. Complete Wiring Harness Removal

- Remove the following parts:
  - Remove the Headlamp Reflector from Housing
  - Disconnect Connectors and Sensors from Headlamp Housing .
- Disconnect instrument coupler **(a).**

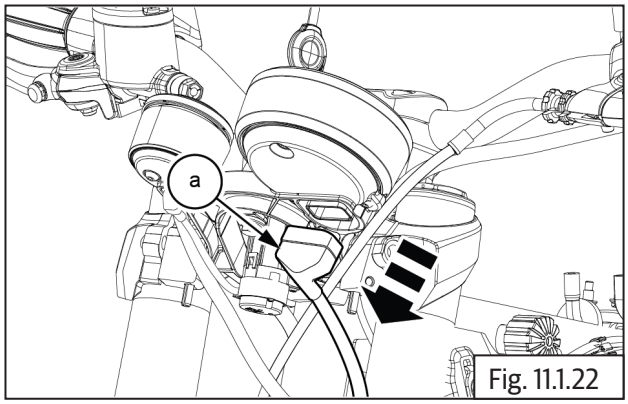

Fig. 11.1.22

- Disconnect tripper coupler **(a).**

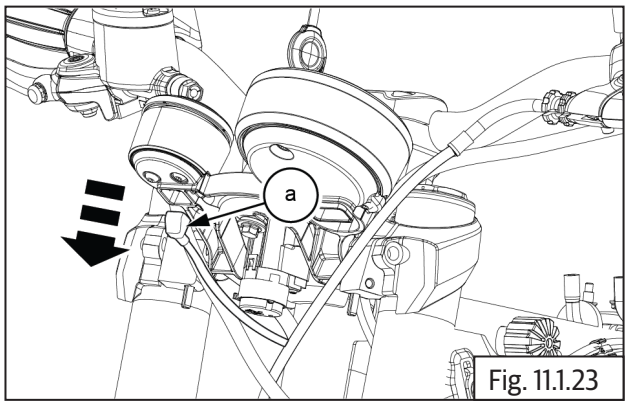

Fig. 11.1.23

- Disconnect the LHS and RHS ignition coil connectors **(a).**

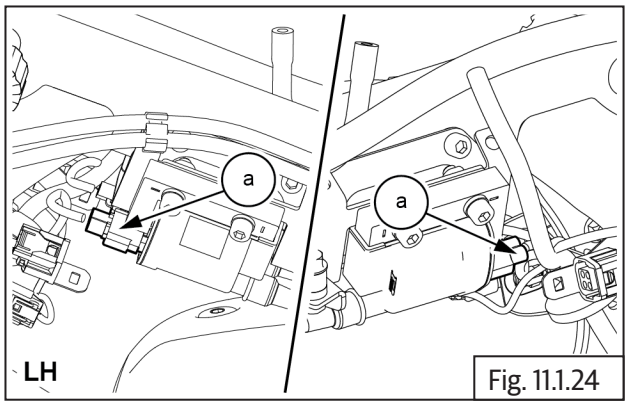

Fig. 11.1.24

- Slide out the wiring harness with coupler **(a)** from LH chassis frame.

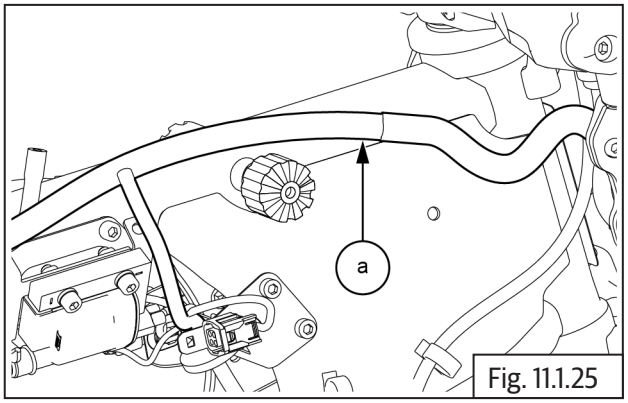

Fig. 11.1.25

- Disconnect front wheel ABS sensor connector **(a)** from LHS frame.

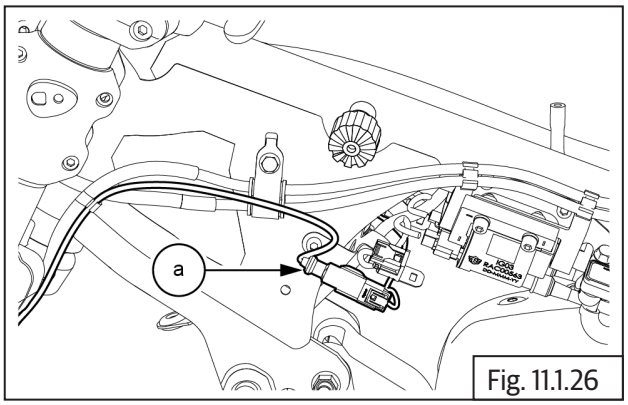

Fig. 11.1.26

- Cut the wire tags **(a)** from wiring harness.

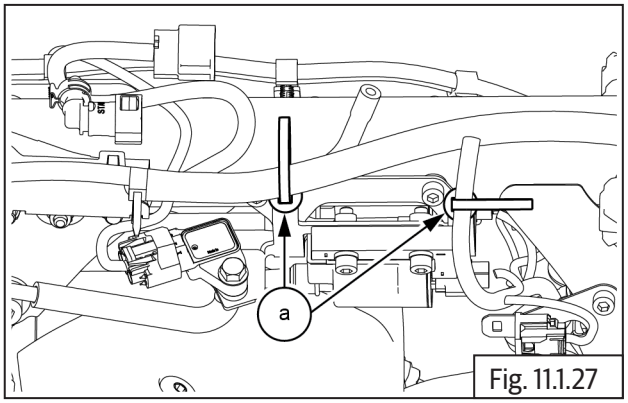

Fig. 11.1.27

- Press the lock to disconnect MAP sensor connector **(a)** from LH and RH frame.

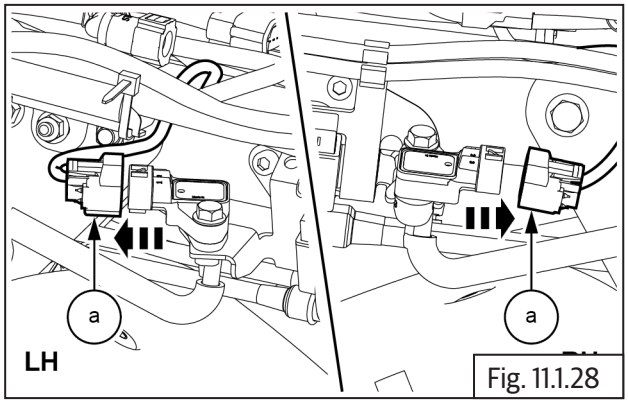

Fig. 11.1.28

- Remove the bolt with washer **(M6) (a)** from wiring harness bracket.

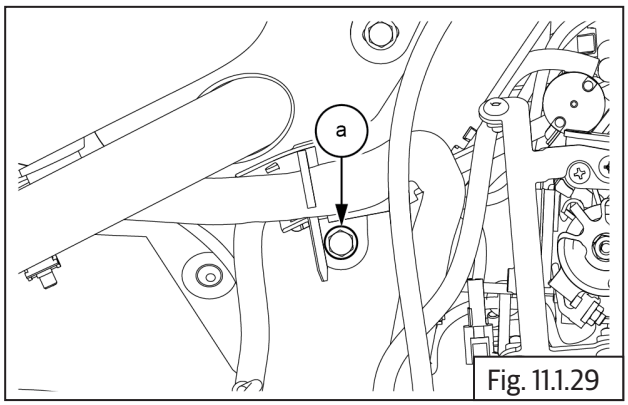

Fig. 11.1.29

	10 mm Socket with Ratchet

- Remove the nut **(a) (M6)** from wiring harness bracket.

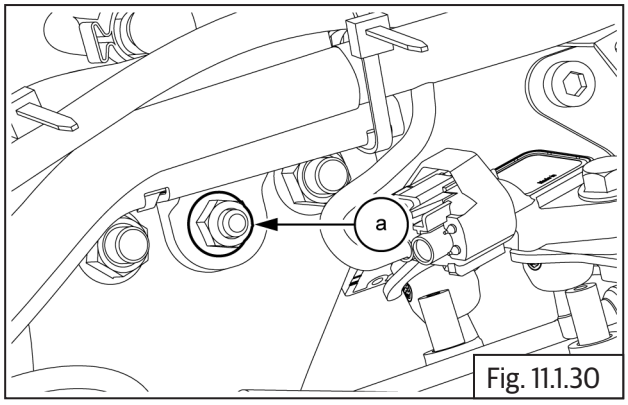

Fig. 11.1.30

	10 mm Socket with Ratchet

- Disconnect rear wheel ABS sensor connector **(a)** located in RHS battery tray.

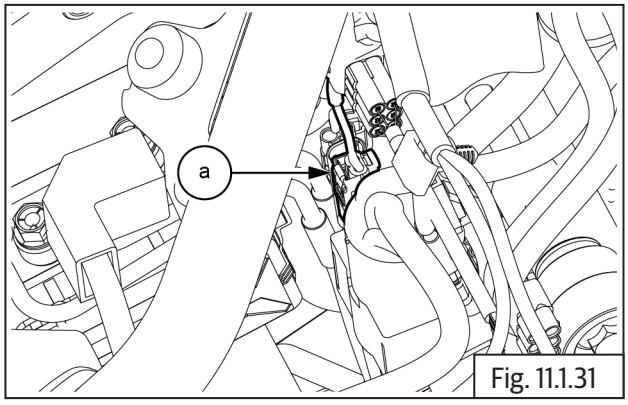

Fig. 11.1.31

- Disconnect ABS modulator connector **(a)** .

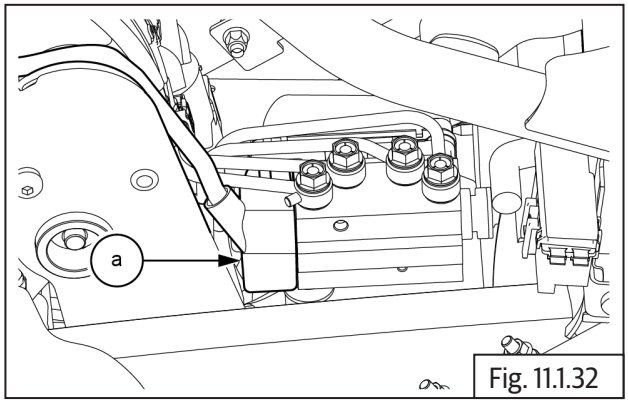

Fig. 11.1.32

- Disconnect side stand switch connector **(a)** .

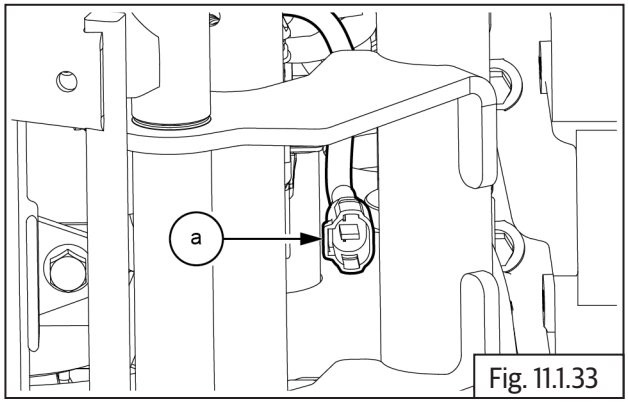

Fig. 11.1.33

- Disconnect ECU connector **(a)**.

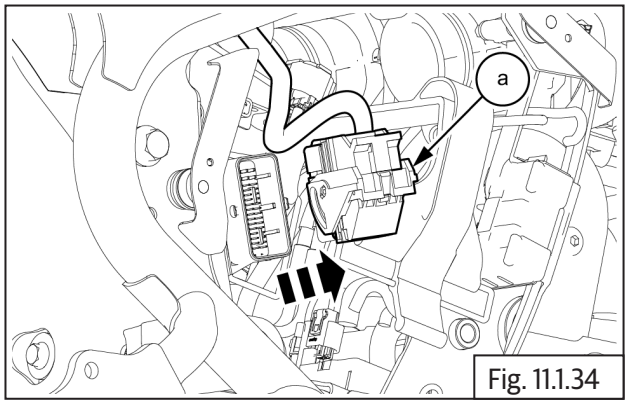

Fig. 11.1.34

- Remove 2Nos bolt with nuts **(a)** from relay bracket.

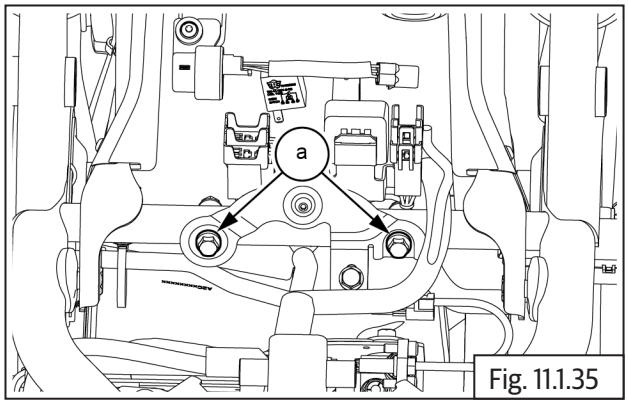

Fig. 11.1.35

	12 mm Socket with Ratchet

- Remove 2Nos button head bolt with nuts **(a)** from relay bracket.

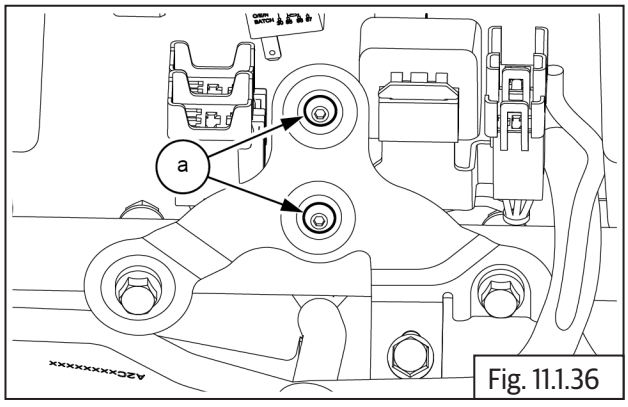

Fig. 11.1.36

	25 mm Torx socket with Ratchet

- Remove complete wiring harness **(a)** from motor cycle.

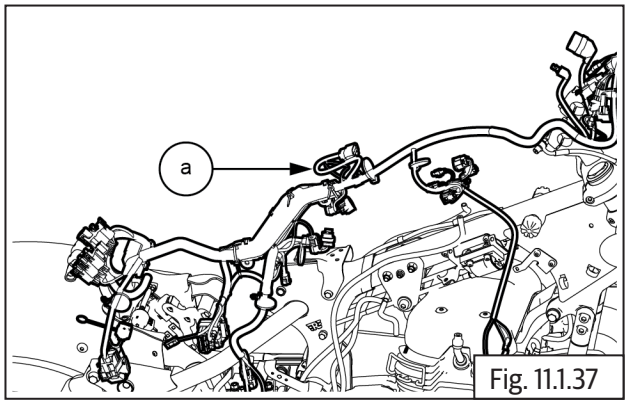

Fig. 11.1.37

Inspection

- Inspect connector pins for any bends, corrosions and damages.
- Inspect headlamp holder for any scratches, rust, cracks and damages. Replace if it is defective.
- Inspect and replace reflector if it has any damages and/or distraction.
- Inspect if wire clips are loosened and tighten appropriately.
- Inspect if headlamp holder bolt is loosened and tighten appropriately.
- Inspect the trafficators bulb filament for any damages and replace.

Battery

- Check battery for any damages.
- Check the battery terminals for sulfating, corrosion or damages.
- Test voltage level. It should be 12.8V to 13.2V approximately.

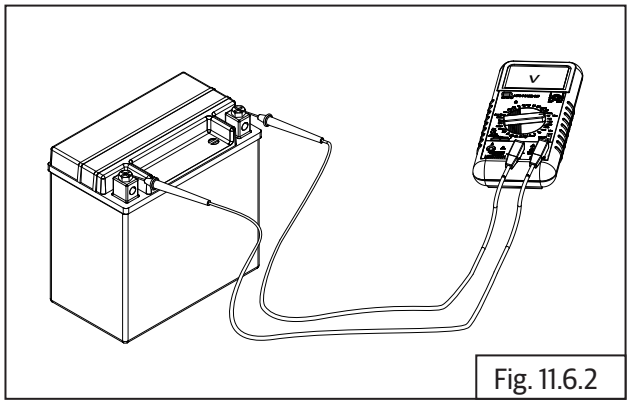
Fig. 11.6.2

Assembly

11.6. Complete Wiring Harness Assemble

- Place complete wiring harness **(a)** on the motor cycle..

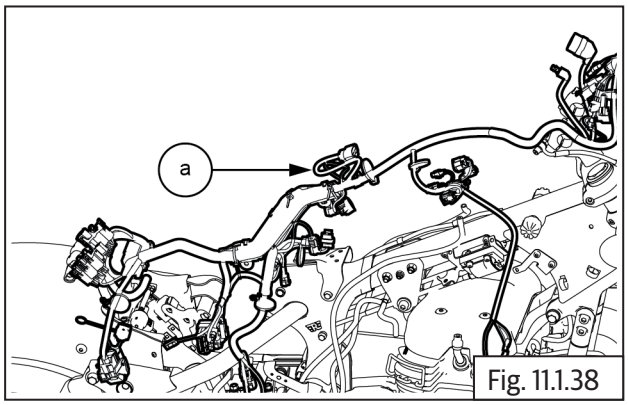

Fig. 11.1.38

- Fit relay bracket to main frame and secure with fixings
- Route relays under the cross tube and secure the sub assembly to bracket
- Locate and tighten 2 Nos button head bolt with nuts **(a)** on relay bracket.

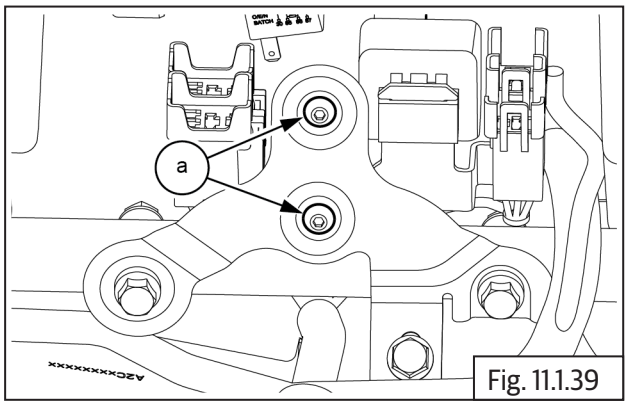

Fig. 11.1.39

	25 mm Torx socket with Ratchet
Torque	7 N-m / 0.7 kgf-m

- Locate and tighten 2Nos hex head flange bolts **(a)** with nuts on relay bracket.

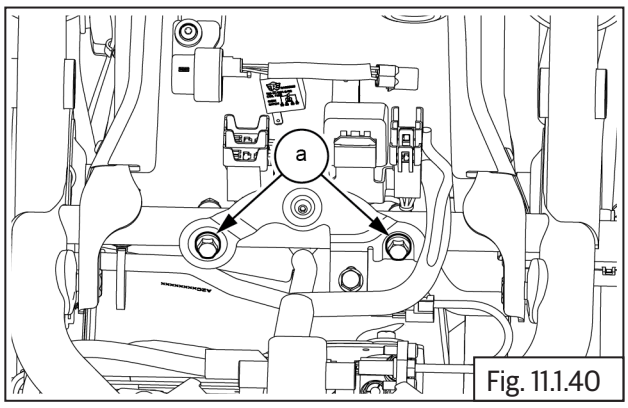

Fig. 11.1.40

	10 mm Socket with Ratchet
Torque	10 N-m / 1.0 kgf-m

- Connect ECU connector **(a)** and ensure it is locked properly.

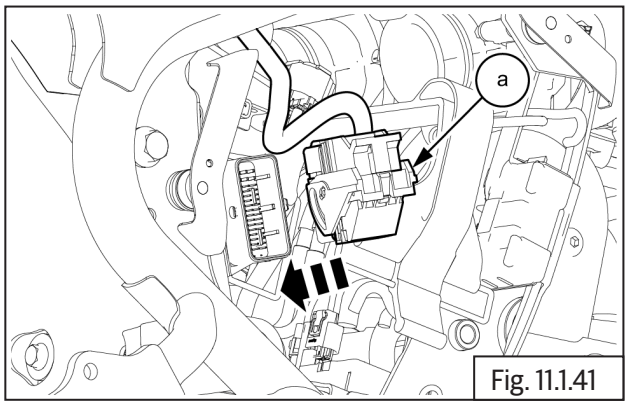

Fig. 11.1.41

- Connect side stand switch connector **(a)** and ensure it is locked properly.

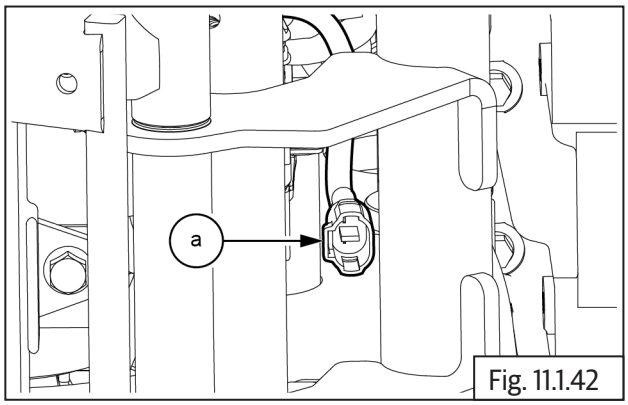

Fig. 11.1.42

- Connect ABS module connector **(a)** and ensure it is locked properly .

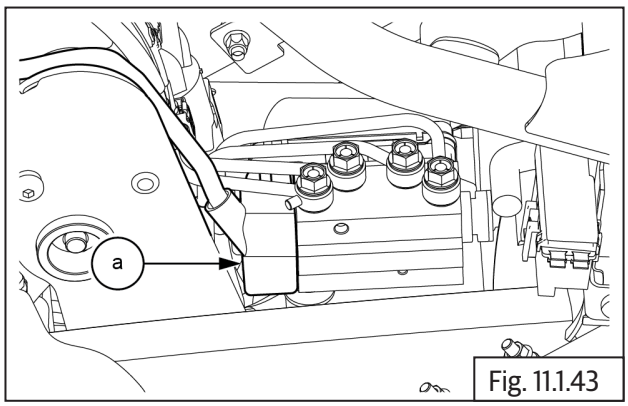

Fig. 11.1.43

- Connect rear wheel ABS sensor connector **(a)** located in RHS battery tray.

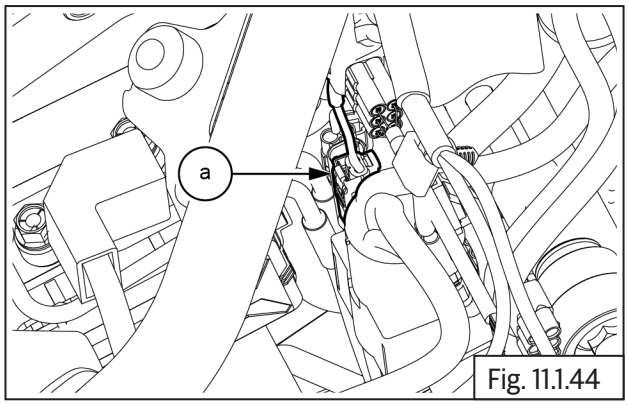

Fig. 11.1.44

- Locate and tighten bolt **(a) (M6)** on wiring harness bracket.

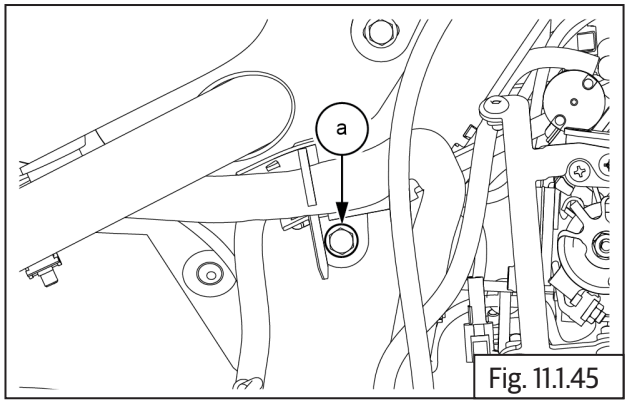

Fig. 11.1.45

	10 mm Socket with Ratchet
Torque	3 N-m / 0.3 kgf-m

- Locate and tighten nut **(a) (M6)** on wiring harness bracket.

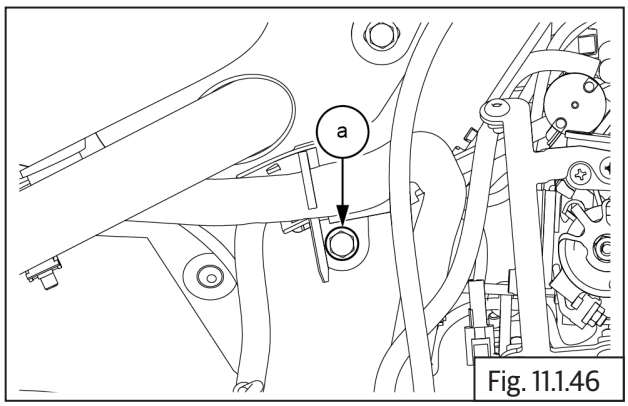

Fig. 11.1.46

	10 mm Socket with Ratchet
Torque	3 N-m / 0.3 kgf-m

- Press the lock to connect MAP sensor connector **(a)** on LH and RH frame.

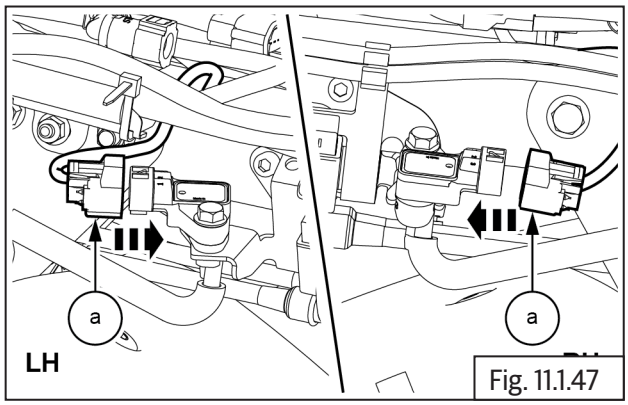

Fig. 11.1.47

- Fix the wire tags **(a)** on wiring harness.

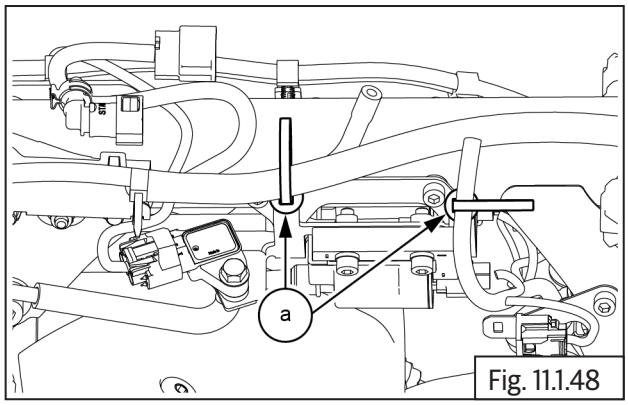

Fig. 11.1.48

- Fix the wire tags **(a)** on ignition coil bracket.

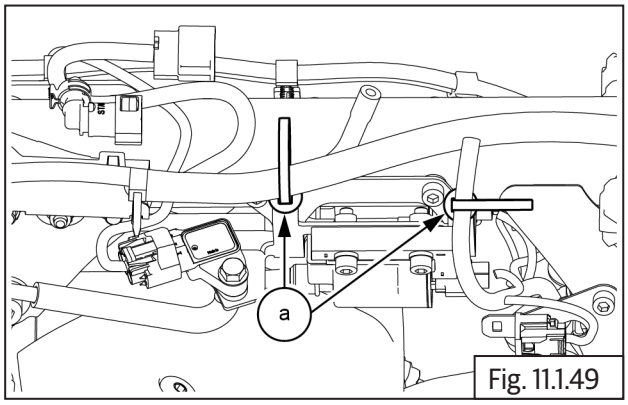

Fig. 11.1.49

- Feed the branch **(a)** by the headstock over the engine mount, between the sides of the headstock.

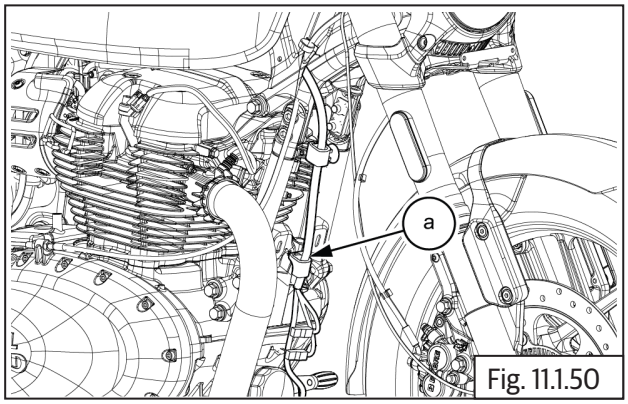

Fig. 11.1.50

- Connect front wheel ABS sensor connector **(a)** on LHS frame and ensure it is locked properly .

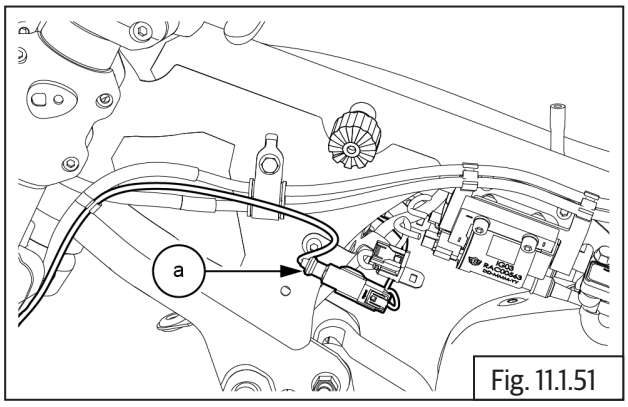

Fig. 11.1.51

- Route the wiring harness with coupler **(a)** into LH chassis frame

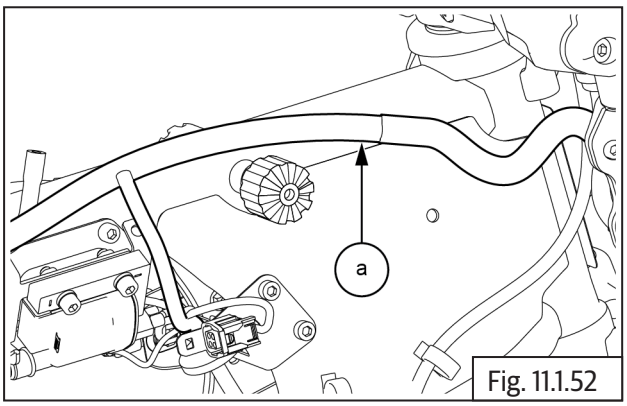

Fig. 11.1.52

- Connect the LHS and RHS ignition coil connectors **(a)** and ensure it is locked properly **.**

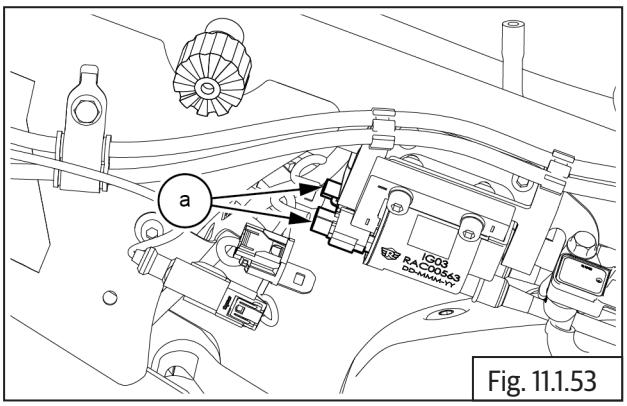

Fig. 11.1.53

- Connect tripper connector **(a)** and ensure it is locked properly .

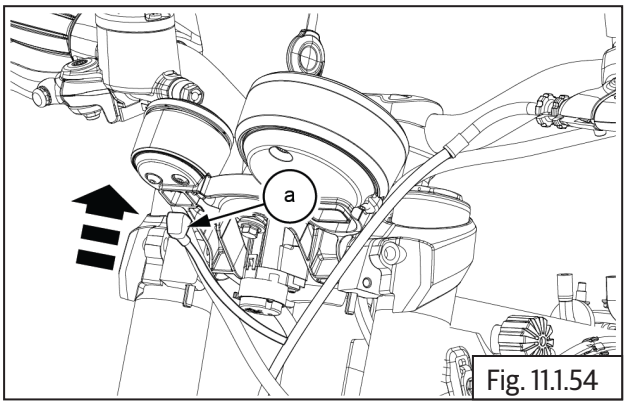

Fig. 11.1.54

- Connect cluster connector **(a)** and ensure it is locked properly .

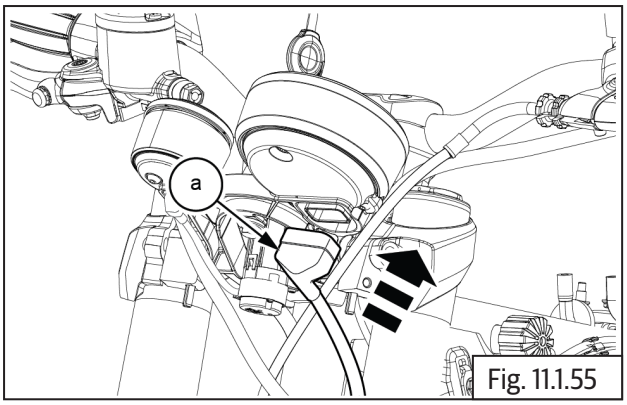

Fig. 11.1.55

- Assemble the Headlamp Reflector.

11.7 Horn Assembly

- Locate and tighten Hex flange bolt and nut **(M8) (a)** into RH horn bracket.

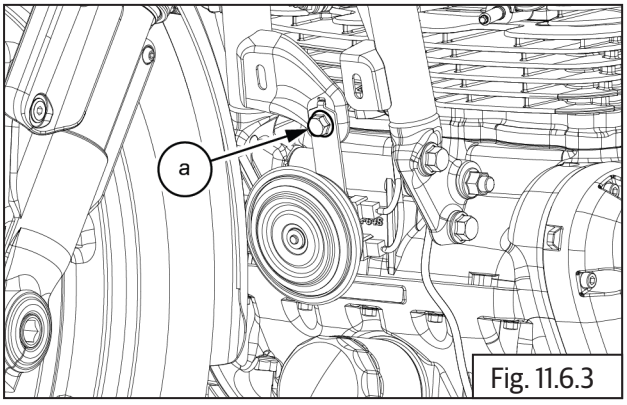

Fig. 11.6.3

	12 mm Socket with Ratchet 12 mm Ring spanner
Torque	25 N-m/2.5 kgf-m

- Connect the horn connectors **(a)**.

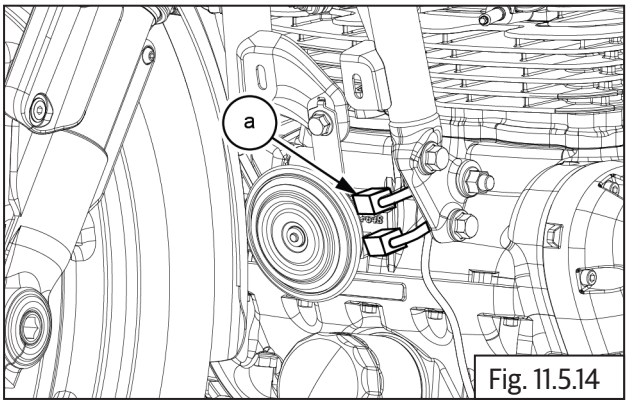

Fig. 11.5.14

11.8 Tail Lamp Assembly

11.8.1 Roll Over Sensor

- Locate and tighten 1 Nos button head screw **(M5) (a)** on roll over sensor

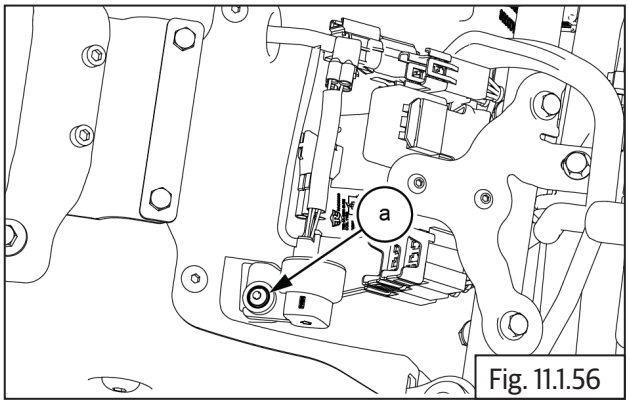

Fig. 11.1.56

	20 mm Torx socket with Ratchet
Torque	7 N-m / 0.7 kgf-m

- Connect roll over sensor connector **(a)**.

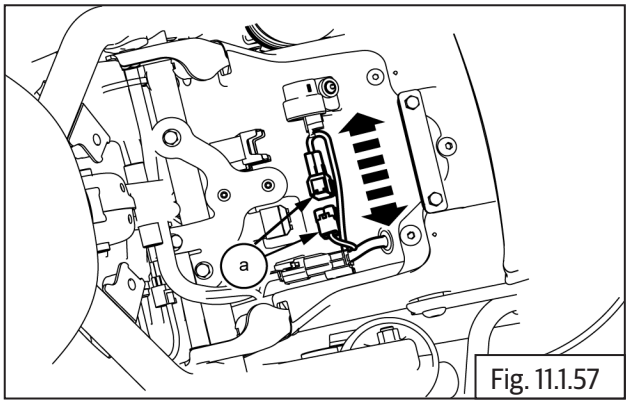

Fig. 11.1.57

11.8.2 Trafficator bulb - Front

- Gently press and turn it clockwise to fix the bulb into holder.

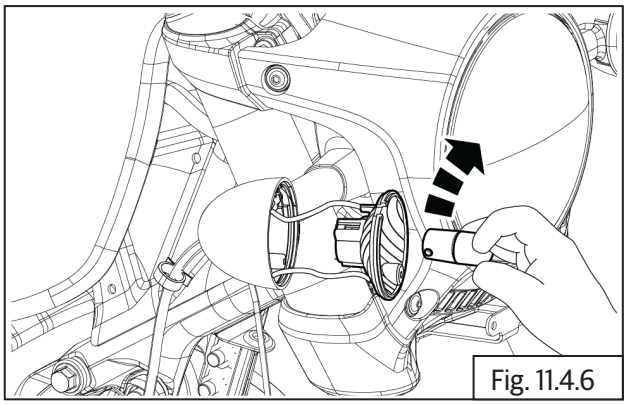
Fig. 11.4.6

- Locate lens cover and grommet into trafficator assembly.

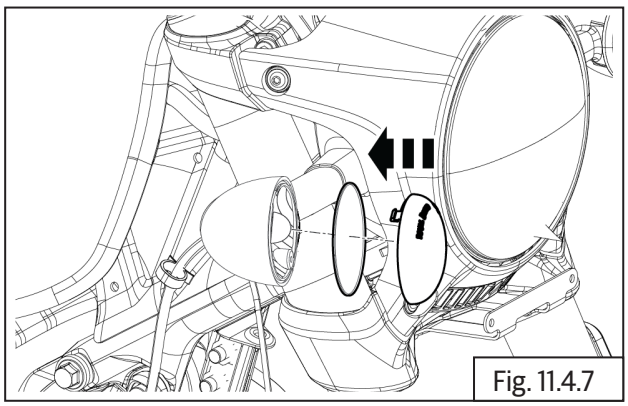
Fig. 11.4.7

- Tighten screw **(a)** into trafficator assembly.

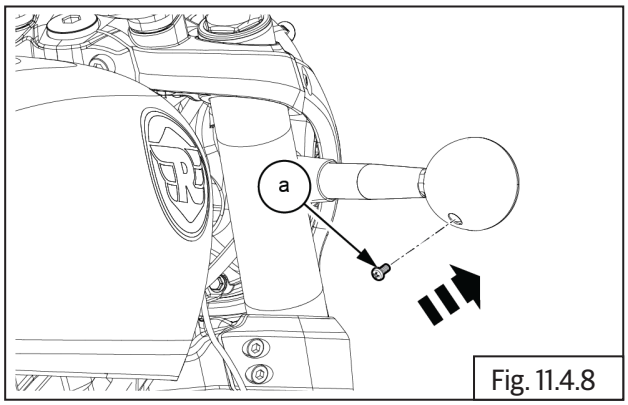

Fig. 11.4.8

	Screw driver

11.8.3 Direction Trafficators - Rear

- Install rear trafficator **(a)** into rear mudguard.

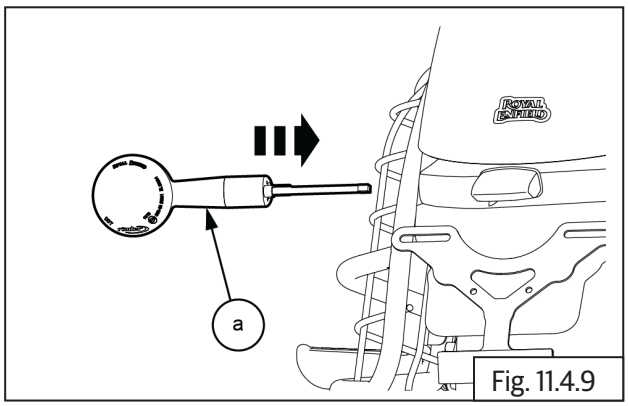

Fig. 11.4.9

- Locate and tighten flange nut **(M8) (a)** into rear trafficator .

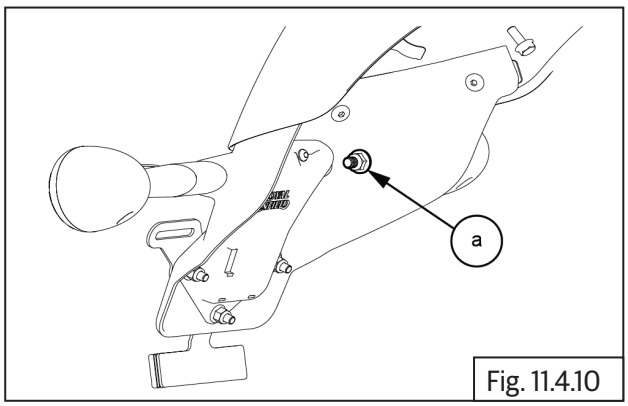

Fig. 11.4.10

	12 mm Ring spanner
Torque	4 - 6 N-m / 0.4 - 0.6 kgf-m

- Connect the rear trafficator connectors **(a)**.

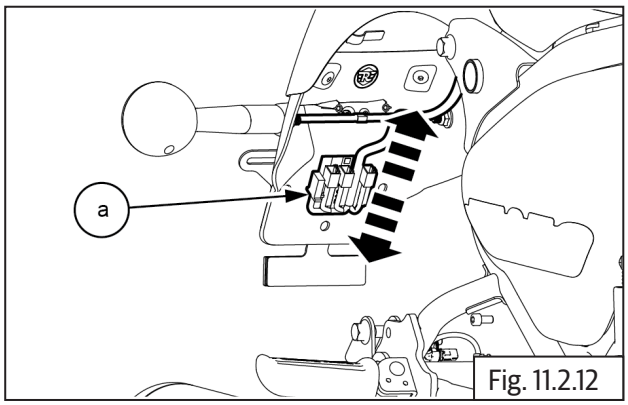

Fig. 11.2.12

- Locate the connector cover **(b)** on the rear mudflap.

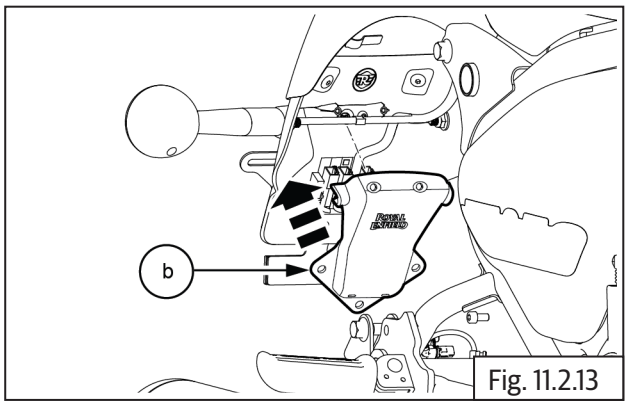

Fig. 11.2.13

- Locate and tighten 2 Nos torx screws **(a)** into connector cover **(b)**.

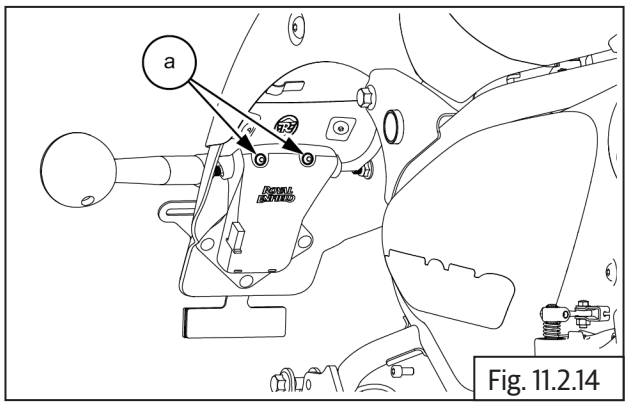

Fig. 11.2.14

	3 mm Torx socket with Ratchet
Torque	1.5 N-m / 0.15 kgf-m

- Locate and tighten Hex nut 3Nos **(M6) (a)** into mudflap.

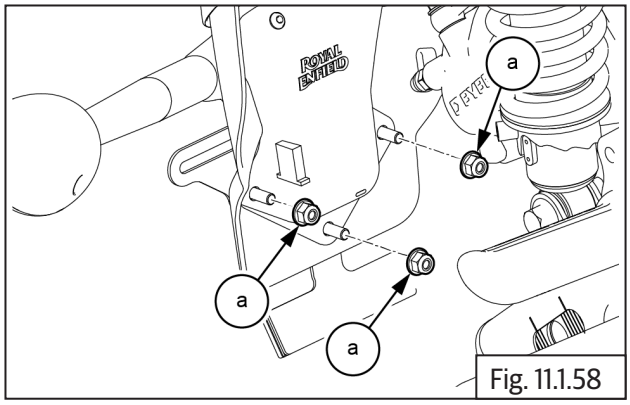

Fig. 11.1.58

	10 mm Socket with Ratchet
Torque	4 N-m / 0.4 kgf-m

11.8.4 License plate illumination lamp Assembly

- Locate the license plate illumination lamp **(a)** on rear mudguard

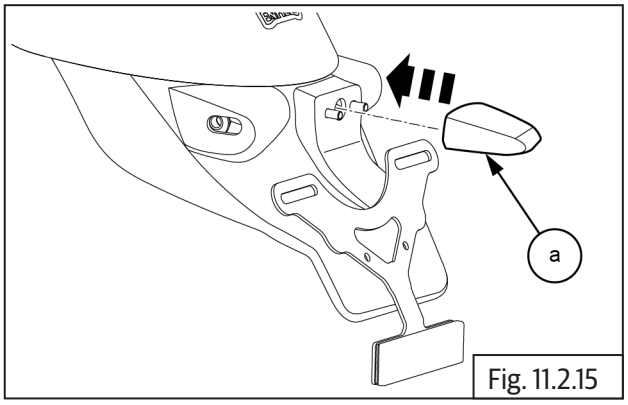

Fig. 11.2.15

- Locate and tighten 2 Nos cap bolts on license plate illumination lamp **(a)** .

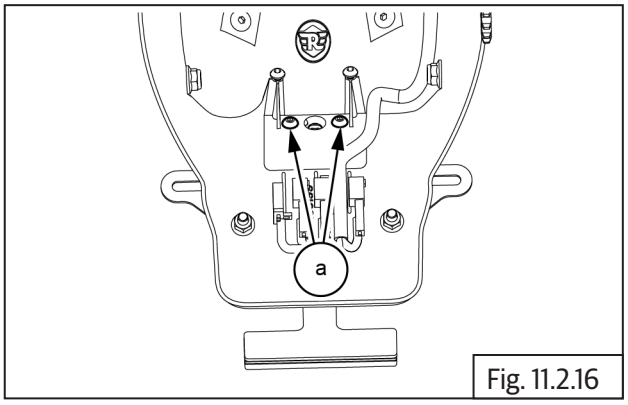

Fig. 11.2.16

	4 mm Allen socket with ratchet
Torque	7 N-m / 0.7 kgf-m

- Connect the license plate illumination lamp connector **(a)**.

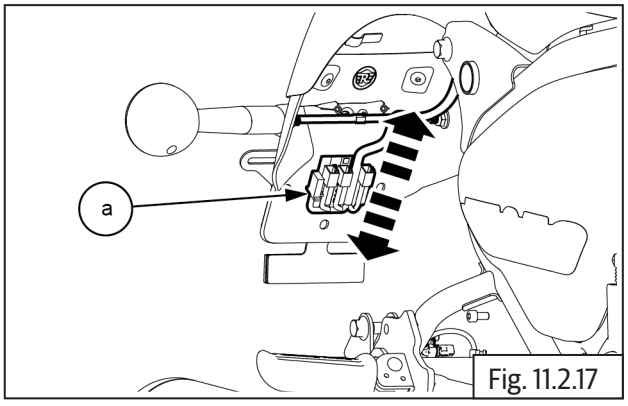

Fig. 11.2.17

11.8.5 Tail Lamp

NOTE
• *Handle tail lamp assembly with care. Avoid over tightening of lens screws.*

- Locate the tail lamp **(a)** with rubber boot **(b)** into rear mudguard.

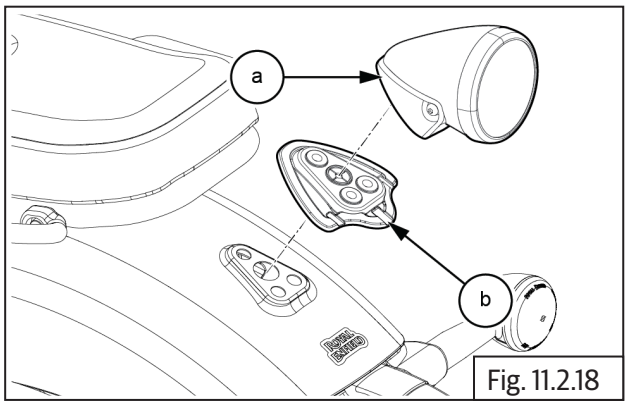

Fig. 11.2.18

- Locate and tighten 3 Nos bolts **(a)** with top hat sleeves **(b)** into rear tail lamp .

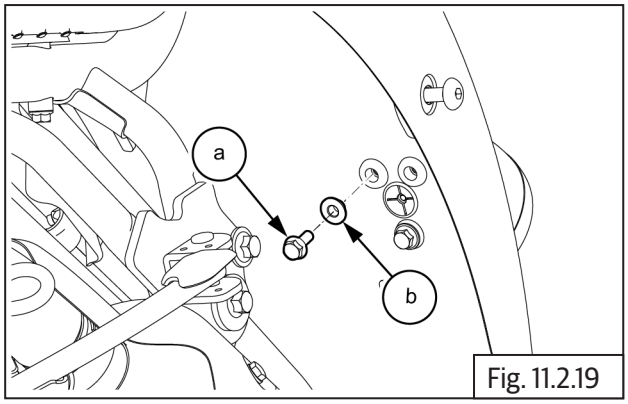

Fig. 11.2.19

	10 mm Hex socket with Ratchet
Torque	10 N-m/1.0 kgf-m

- Connect the tail lamp connector **(a)**.

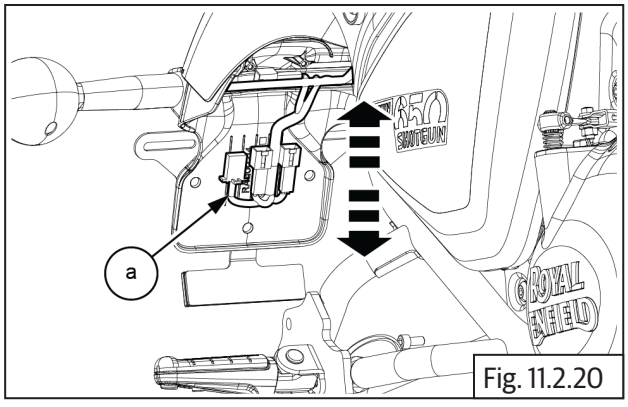

Fig. 11.2.20

- Locate the connector cover **(a)** on the rear mudflap.

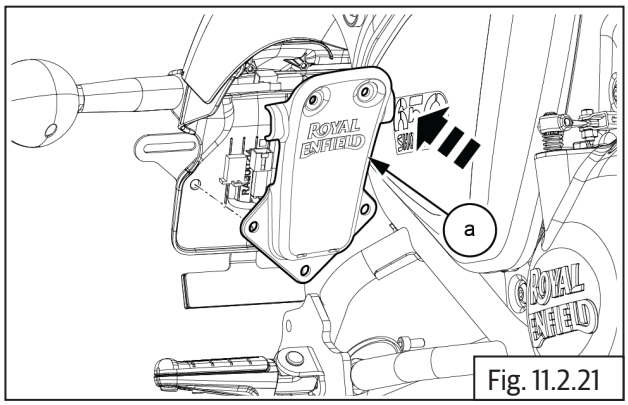

Fig. 11.2.21

- Locate and tighten 2 Nos torx screws **(a)** into connector cover .

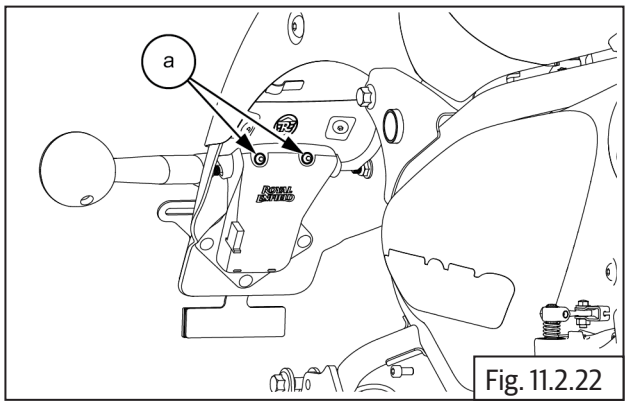

Fig. 11.2.22

	3 mm Torx socket with Ratchet
Torque	1.5 N-m / 0.15 kgf-m

- Locate and tighten Hex nut 3Nos **(M6) (a)** into mudflap.

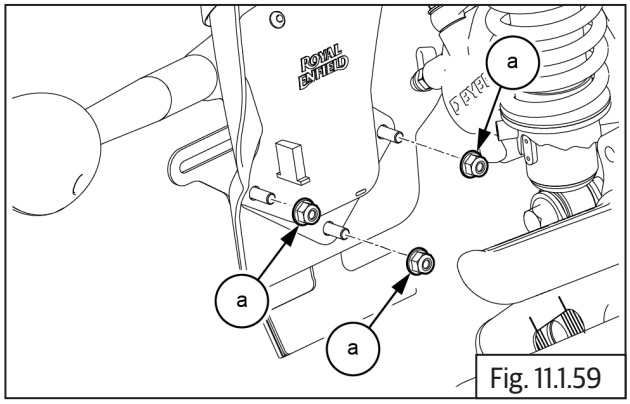

Fig. 11.1.59

	10 mm Socket with Ratchet
Torque	4 N-m / 0.4 kgf-m

11.9 Headlamp Assembly

11.9.1 Ignition Switch Cum Steering Lock

- Locate ignition key set **(a)** into cluster bracket.

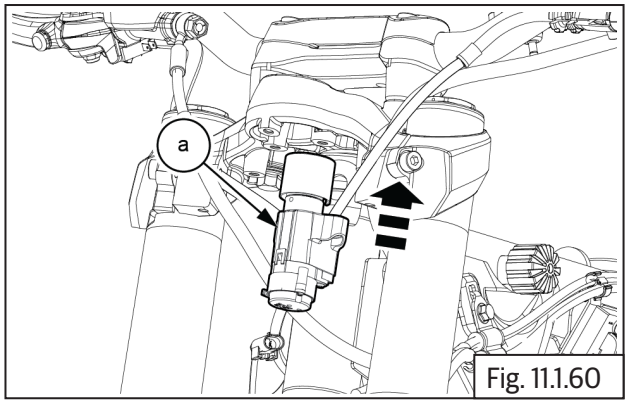

Fig. 11.1.60

- Locate and tighten 2 Nos. cap bolts **(M6) (a)** on below key set.

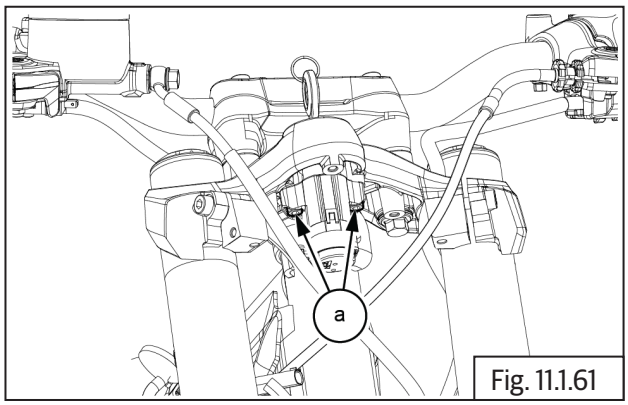

Fig. 11.1.61

	5 mm Allen socket with Ratchet
Torque	5 N-m / 0.5 kgf-m

11.9.2 Tripper Unit

- Locate instrument bracket **(a)** into front assembly.

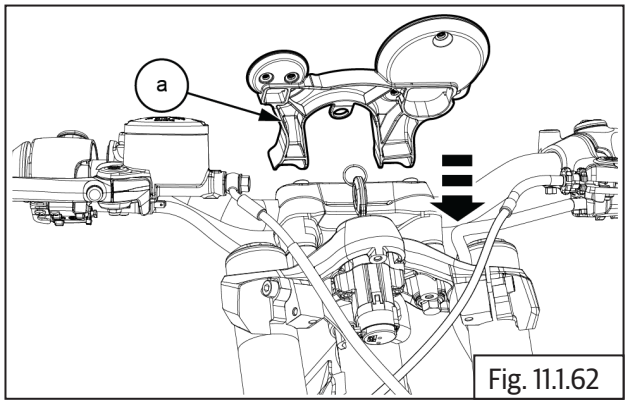

Fig. 11.1.62

- Install washer and grommet with sleeve into instrument bracket.

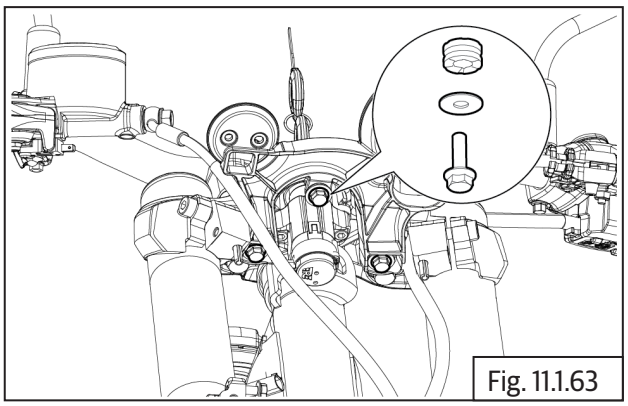
Fig. 11.1.63

- Locate and tighten 3 Nos Hex head flange bolts **(M6) (a)** into instrument bracket.

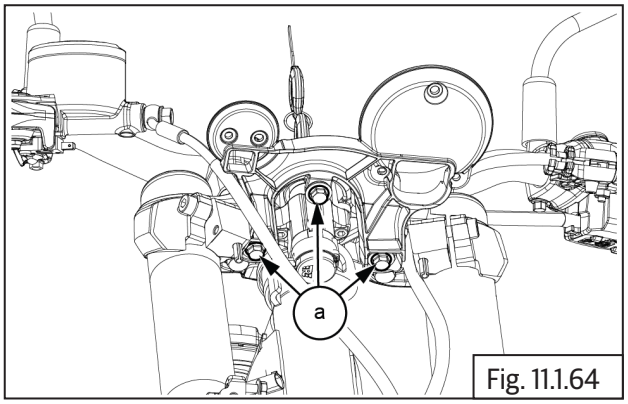

Fig. 11.1.64

	10 mm socket and Ratchet
Torque	10 N-m/1.0 kgf-m

- Locate tripper **(a)** into instrument bracket.

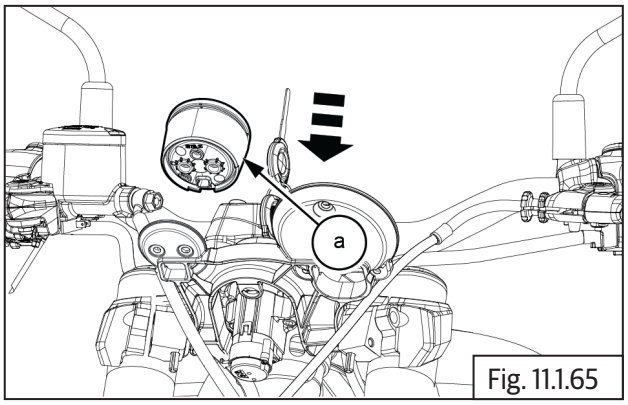

Fig. 11.1.65

- Locate and tighten 2 Nos button bolts **(M5) (a)** into instrument bracket.

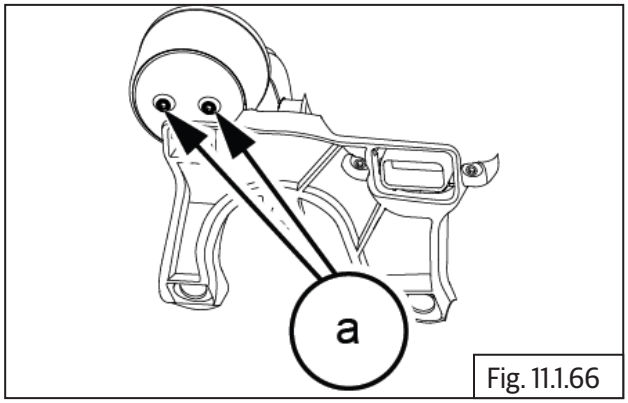

Fig. 11.1.66

	3 mm Allen socket
Torque	3 N-m / 0.3 kgf-m

- Connect tripper connector **(a)** and ensure it is locked properly .

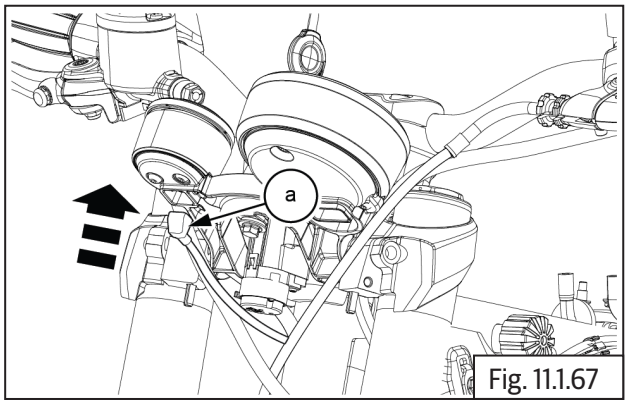

Fig. 11.1.67

11.9.3 Cluster Unit

- Locate cluster **(a)** into instrument bracket.

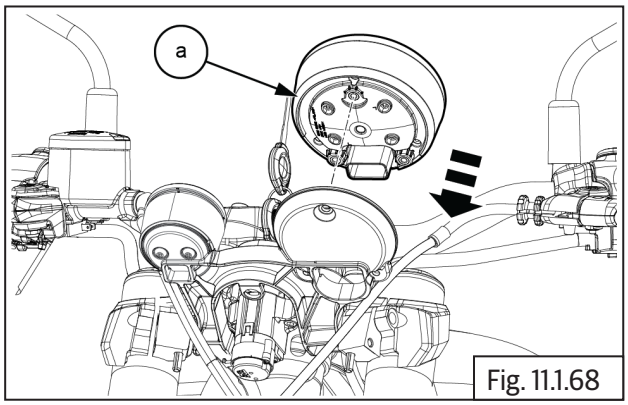

Fig. 11.1.68

- Locate and tighten 3 Nos button bolts **(M5) (a)** into instrument bracket.

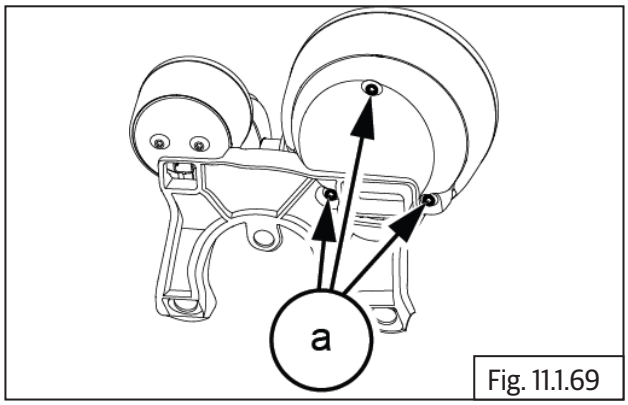

Fig. 11.1.69

	3 mm Allen socket
Torque	3 N-m / 0.3 kgf-m

- Connect cluster connector **(a)** and ensure it is locked properly .

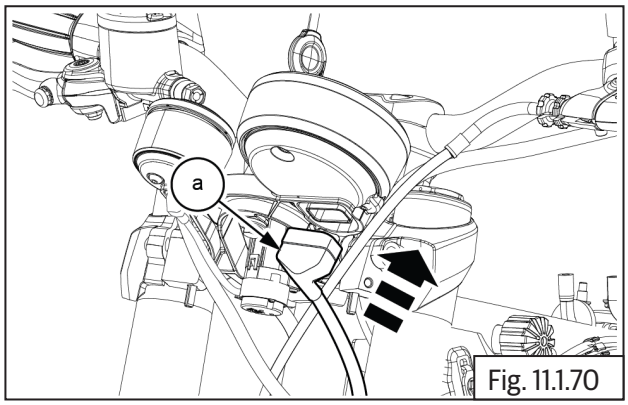

Fig. 11.1.70

- Similarly install RHS trafficator.

11.2.4 Front Trafficators into Headlamp Holder

- Locate the RHS trafficator **(a)** into headlamp housing.

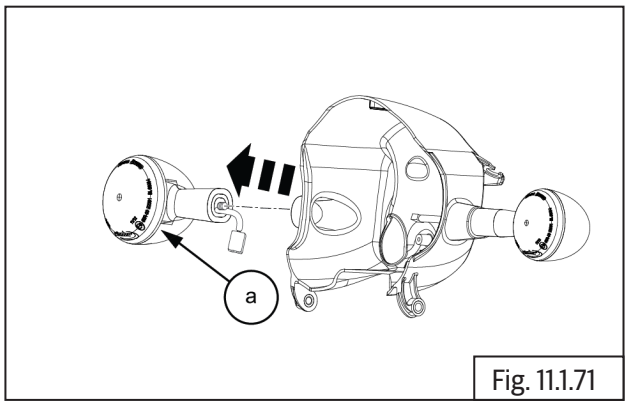

Fig. 11.1.71

- Locate and tighten flange nut 1 Nos **(M8) (a)** into RHS trafficator.

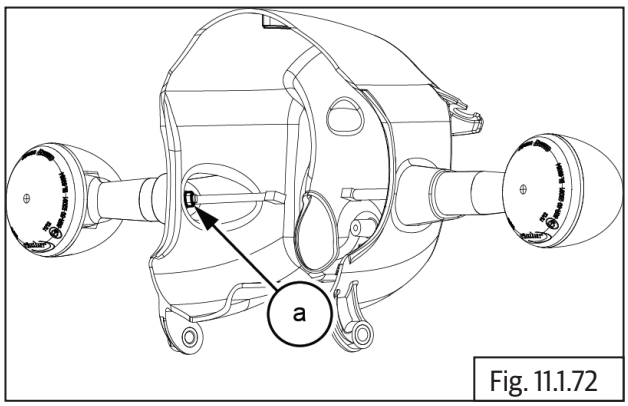

Fig. 11.1.72

	12 mm Socket and Ratchet
Torque	5-6 N-m / 0.5-0.6 kgf-m

- Similarly install to LHS trafficator.

11.2.3 Headlamp Housing into Holder

- Locate head lamp housing **(a)** into holder.

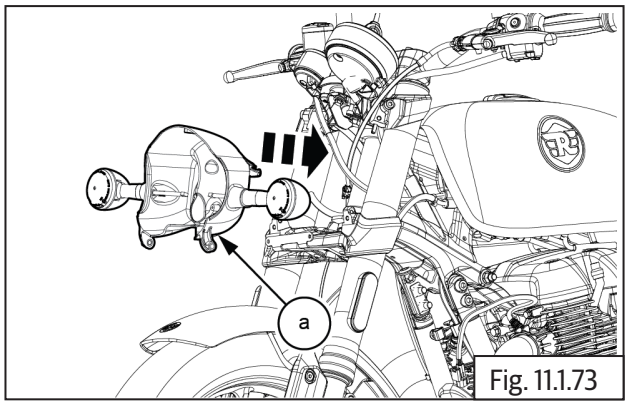

Fig. 11.1.73

- Ensure both LH and RH pins **(a)** properly seated.

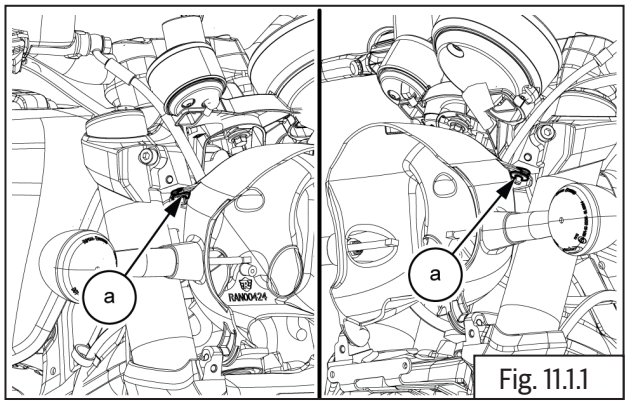

Fig. 11.1.1

- Locate and tighten 2 Nos. Hex head flange bolts **(M6) (a)** LHS and RHS bottom of headlamp housing.

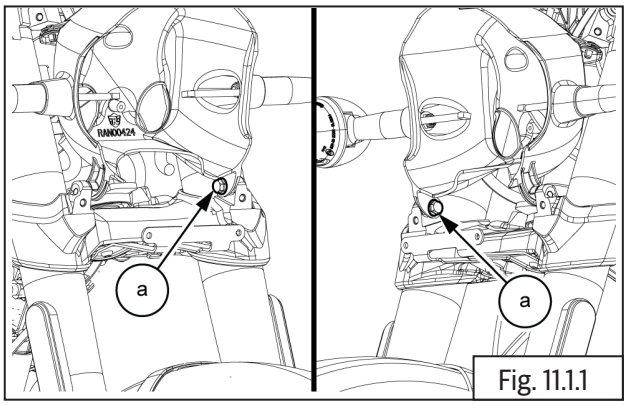

Fig. 11.1.1

	10 mm Socket and Ratchet
Torque	10 N-m / 1.0 kgf-m

11.2.2 Connectors and Sensors into Headlamp Housing

- Connect the below mentioned connector from head lamp housing.
- **(1)** Main Harness **(2)** Accessory Item **(3)** RH Indicator **(4)** RH switch cube **(5)** RH switch cube **(6)** front brake switch **(7)** Clutch switch **(8)** Info switch **(9)** Ignition switch **(10)** LH switch cube **(11)** LH switch cube.
- Mating parts of connectors 1 to 5 to be pulled through Hole **(a)**.
- Mating parts of connectors 6 to 11 to be pulled through Hole **(b)**.

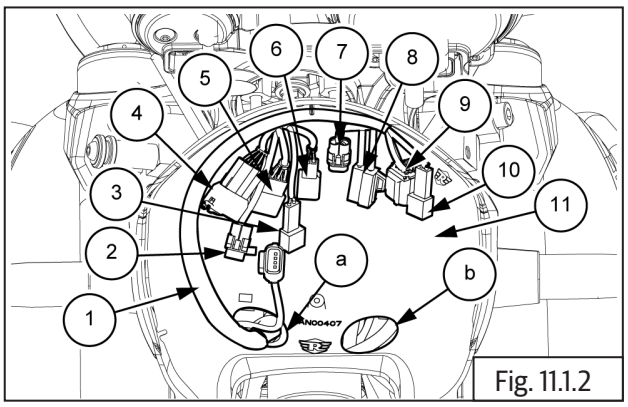

Fig. 11.1.2

- Locate connector plate into head lamp housing.
- Locate and tighten torx screw **(a)** into connector plate.

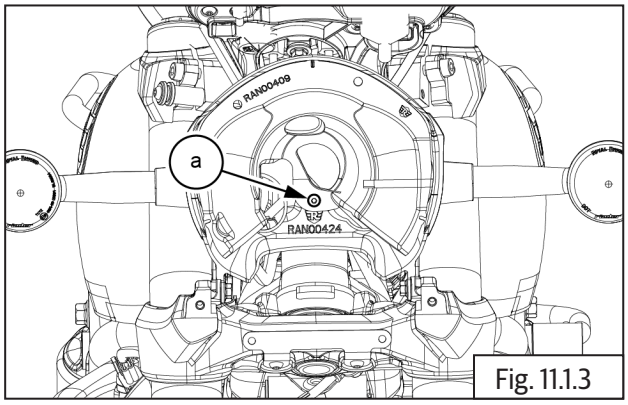

Fig. 11.1.3

	20 mm Torx socket with Ratchet
Torque	1.5 N-m / 0.1 kgf-m

11.9.5 Headlamp Reflector into Housing

- Locate the LHS and RHS headlamp holder below sequence.

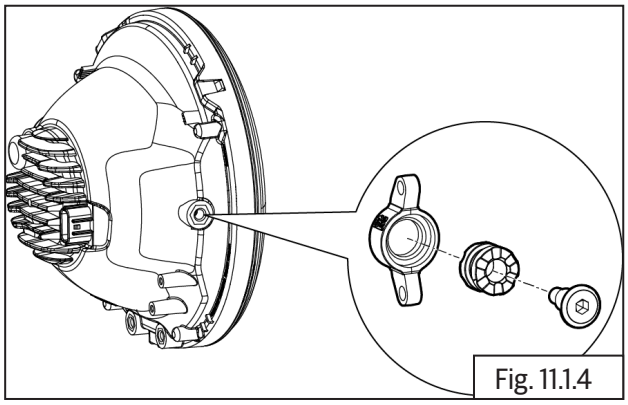
Fig. 11.1.4

	5 mm Allen socket

- Locate the headlamp reflector **(a)** into headlamp cover **(b)**.

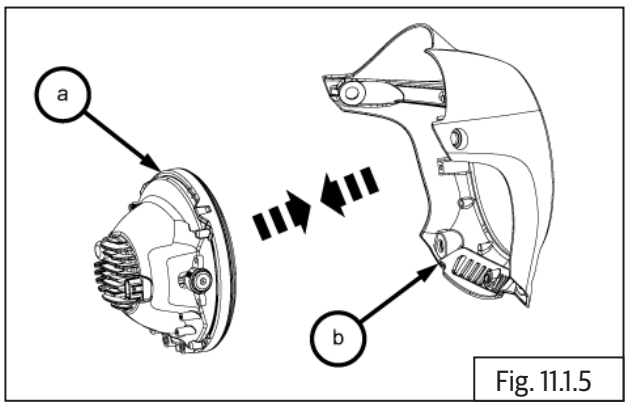

Fig. 11.1.5

- Locate and tighten 4 Nos. cap bolts **(M5) (a)** into headlamp holder.

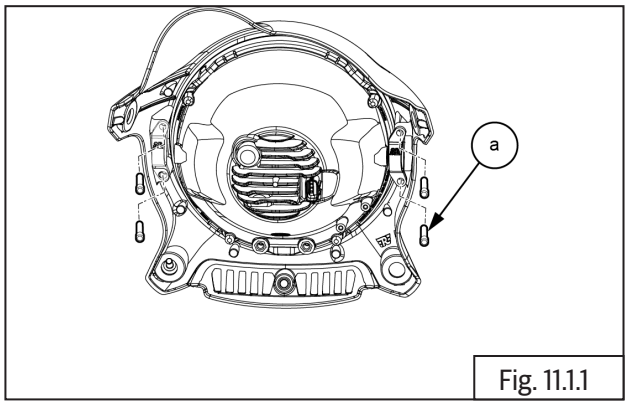

Fig. 11.1.1

	4 mm Allen socket

- Locate and tighten 2 Nos. Hex head bolts **(a)** into headlamp adjuster bracket.

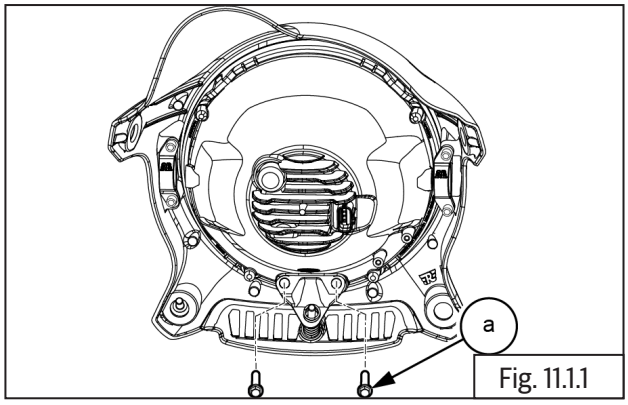

Fig. 11.1.1

	8 mm Socket and Ratchet

- Locate the 4Nos spacers **(a)** on headlamp cover.

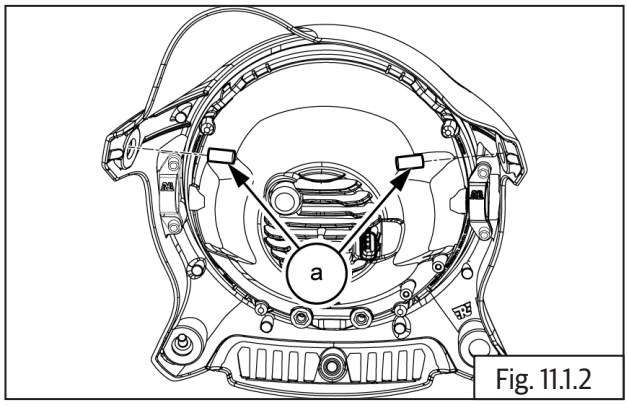

Fig. 11.1.2

- Hold headlamp head carefully and connect headlamp connector .

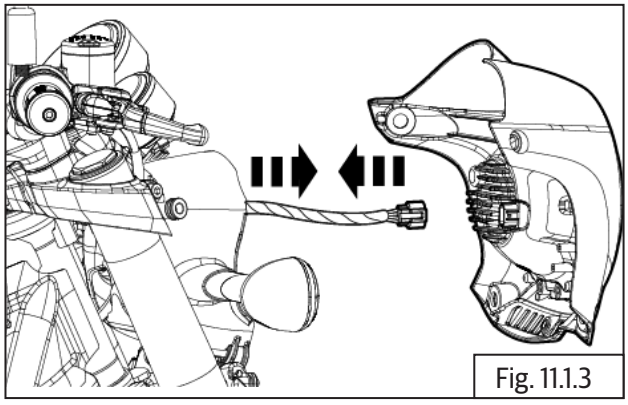
Fig. 11.1.3

- Locate headlamp cover with head lamp assembly **(a)** into headlamp cowl.

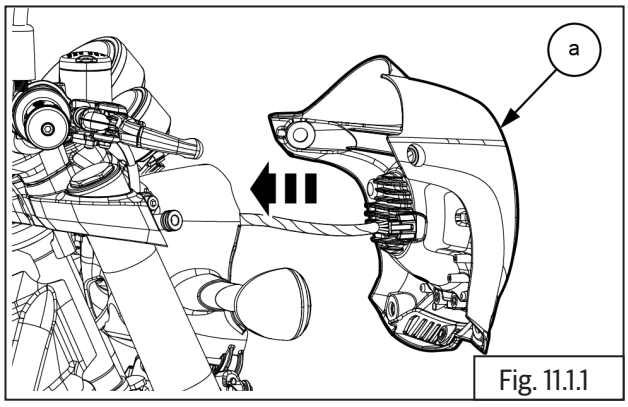

Fig. 11.1.1

- Locate and tighten 4Nos button head bolts **(a)** washers **(b)** into headlamp cover.

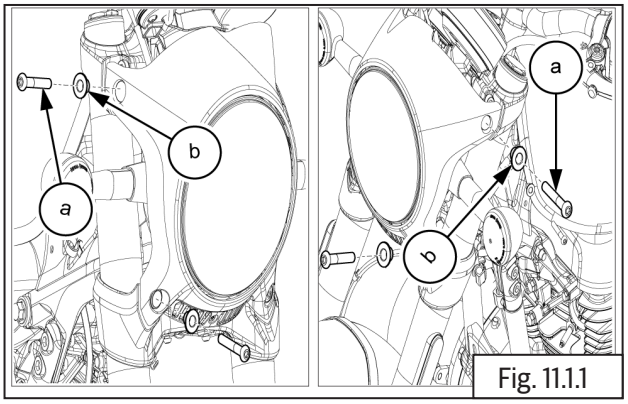

Fig. 11.1.1

	4 mm Allen socket

11.10 Battery Assembly

11.10.1 ECU Module

- Locate the ECU **(a)** into RHS chassis frame.

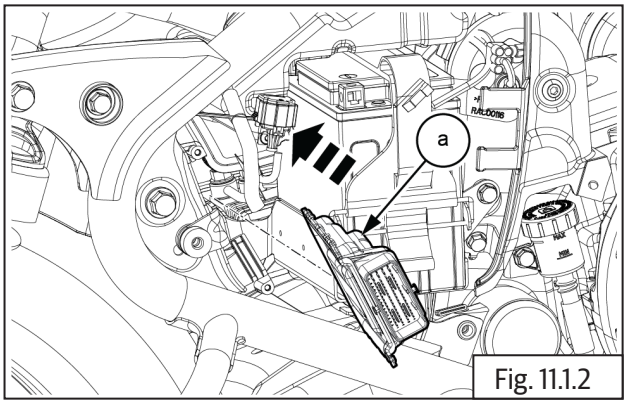

Fig. 11.1.2

- Locate and tighten 2Nos torx screw **(a)** with retaining plate on ECU.

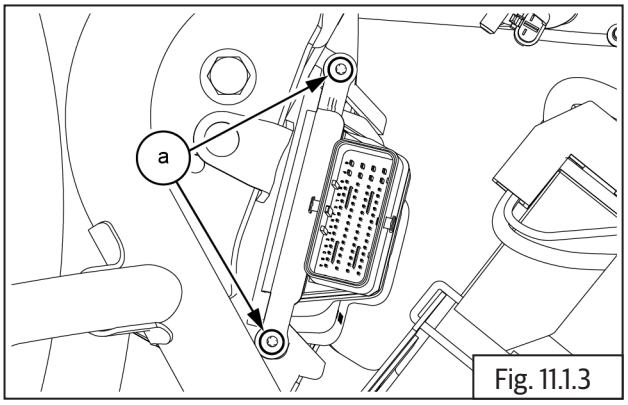

Fig. 11.1.3

	20 mm Torx socket with Ratchet
Torque	1.5 N-m/0.15 kgf-m

- Connect the ECU connector **(a)**.

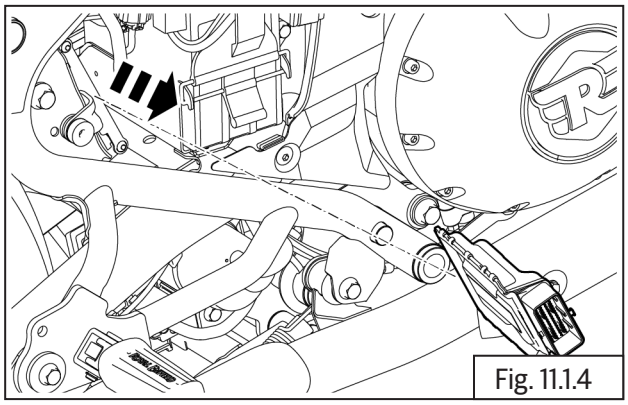
Fig. 11.1.4

- Install the Side panel RH.

11.10.2 Starter Solenoid

- Gently locate solenoid coil on battery bracket along with battery positive (+)cable.

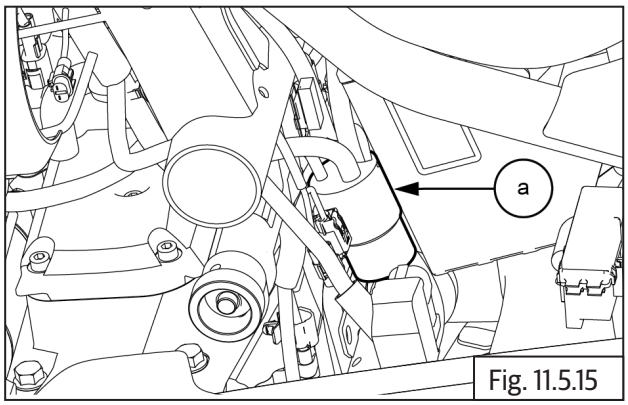

Fig. 11.5.15

- Locate and tighten the nut into self motor solenoid main cable **(a).**

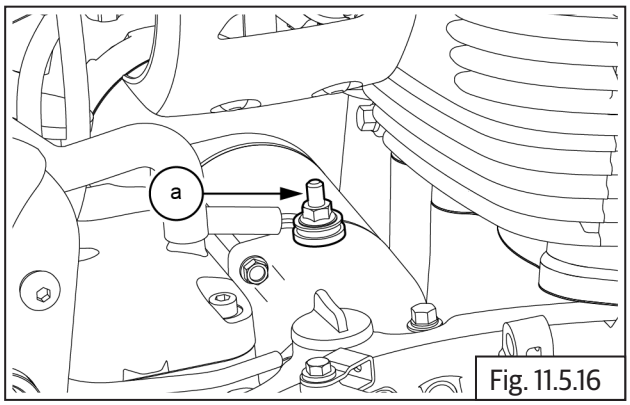

Fig. 11.5.16

	8 mm Socket and Ratchet

11.10.3 RR Unit

- Locate RR unit into canister bracket.
- Locate and tighten Hex flange head nuts 2 Nos **(M6) (a)** into RR unit.

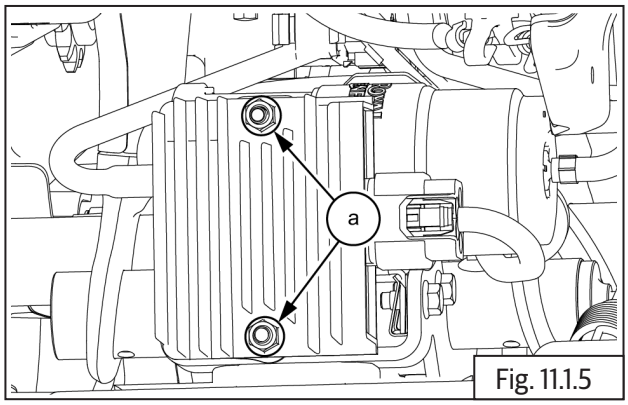

Fig. 11.1.5

	10 mm Socket and Ratchet
Torque	10 N-m / 1.0 kgf-m

- Connect electrical connector **(a)** into RR unit.

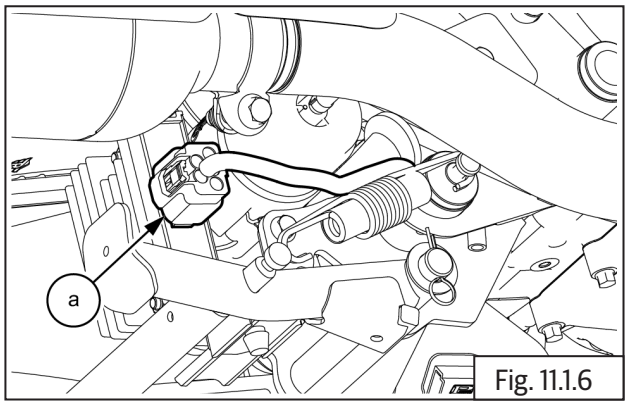

Fig. 11.1.6

11.10.4 Battery Tray

- Locate battery tray **(a)** into chassis frame.

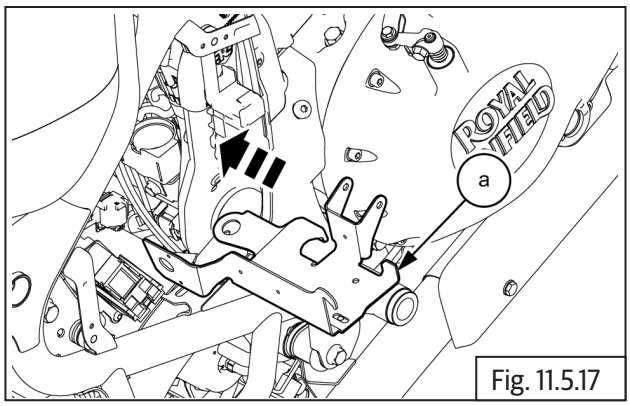

Fig. 11.5.17

- Locate and tighten 2 Nos. Hex head flange bolt **(M6) (a)** to LHS battery tray .

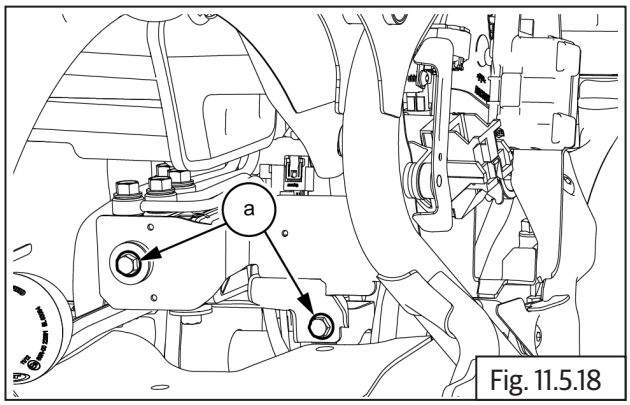

Fig. 11.5.18

	10 mm Socket and Ratchet
Torque	10 N-m / 1.0 kgf-m

- Locate and tighten 1 Nos. Hex head flange bolt **(M6) (a)** into battery tray .

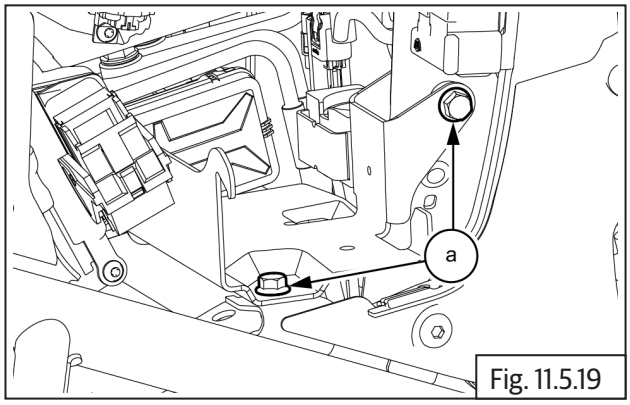

Fig. 11.5.19

	10 mm Socket and Ratchet
Torque	10 N-m / 1.0 kgf-m

- Locate and tighten 1 Nos. Hex head flange bolt **(M6) (a)** into battery tray .

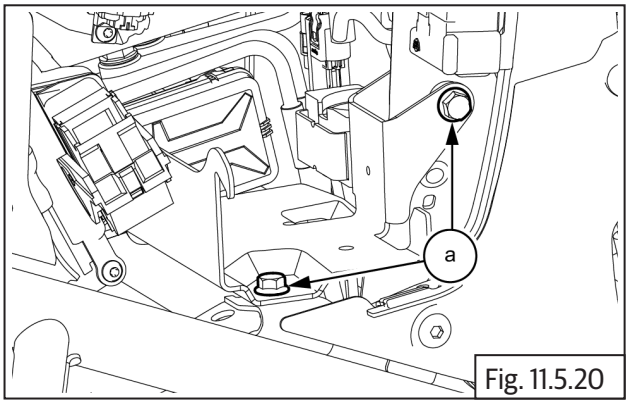

Fig. 11.5.20

	10 mm Socket and Ratchet
Torque	10 N-m / 1.0 kgf-m

- Assemble the Side panel RH.
- Assemble the Side panel LH.

11.10.4 Battery Terminals

- Locate the battery **(a)** into tray.

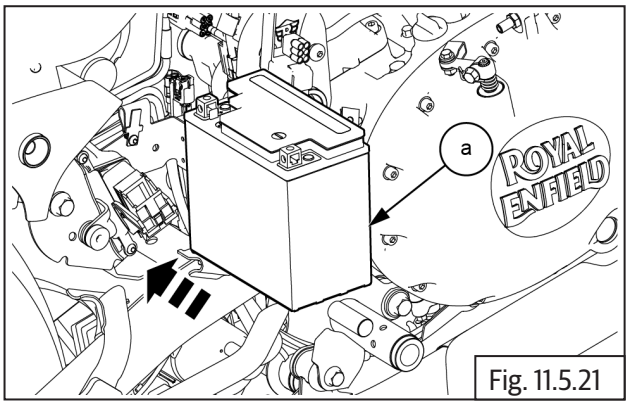

Fig. 11.5.21

- Locate and tighten battery positive (+ ve) terminal bolt **(a)**.

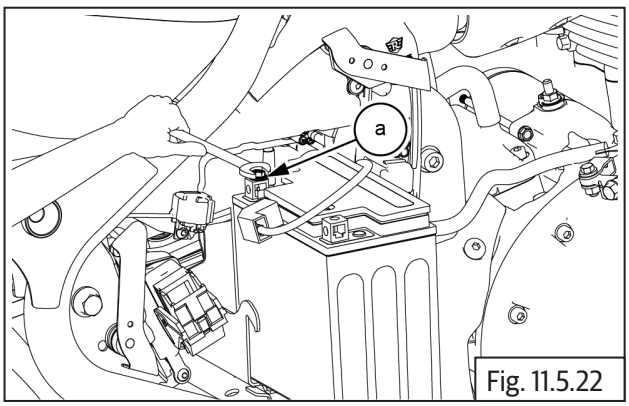

Fig. 11.5.22

	10 mm Double end spanner

- Slightly slide it inward the battery **(a)** for connect (+ ve) terminal bolt.

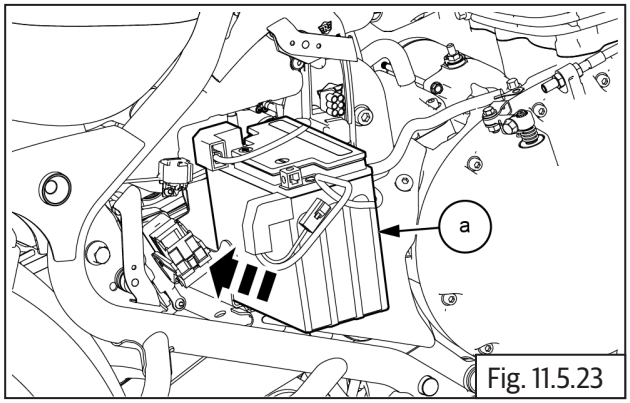

Fig. 11.5.23

- Connect battery negative (- ve) terminal bolt **(a)**.

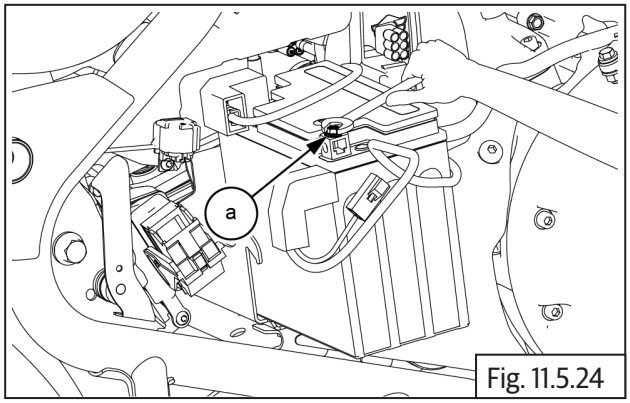

Fig. 11.5.24

	10 mm Double end spanner

- Connect the negative (- ve) coupler **(a)**.

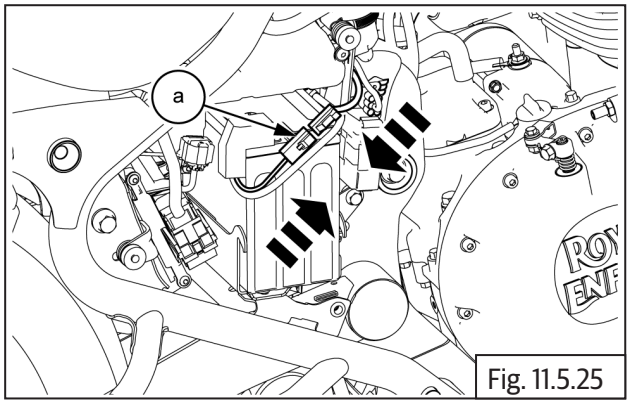

Fig. 11.5.25

- Pull battery strap (belt) **(a)** downwards and lock battery strap bracket.

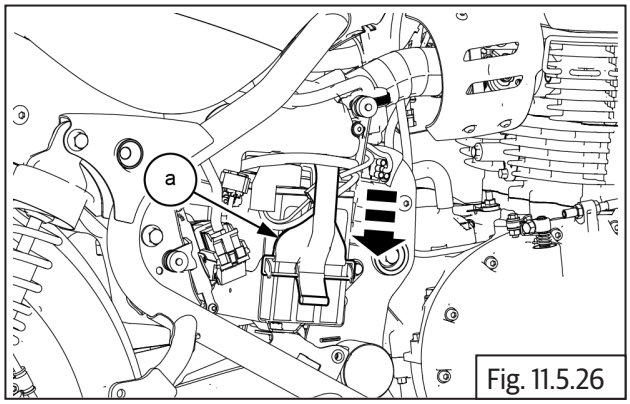

Fig. 11.5.26

- Assemble the Side panel RH.

WIRING DIAGRAMS

CONTENTS PAGE

11.1.1.WIRING DIAGRAMS

11.1 ABS System 694
11.2 Accessory Circuit 695
11.3 Charging Circuit 696
11.4 Ground Circuit 697
11.5 Horn Circuit 698
11.6 Ignition Circuit 699
11.7 Lighting Circuit 700
11.8 Complete Schematic 701
11.9 Signaling Circuit 702
11.10 Starting Circuit 703

SHOTGUN 650 - WIRING HARNESS - ABS SYSTEM

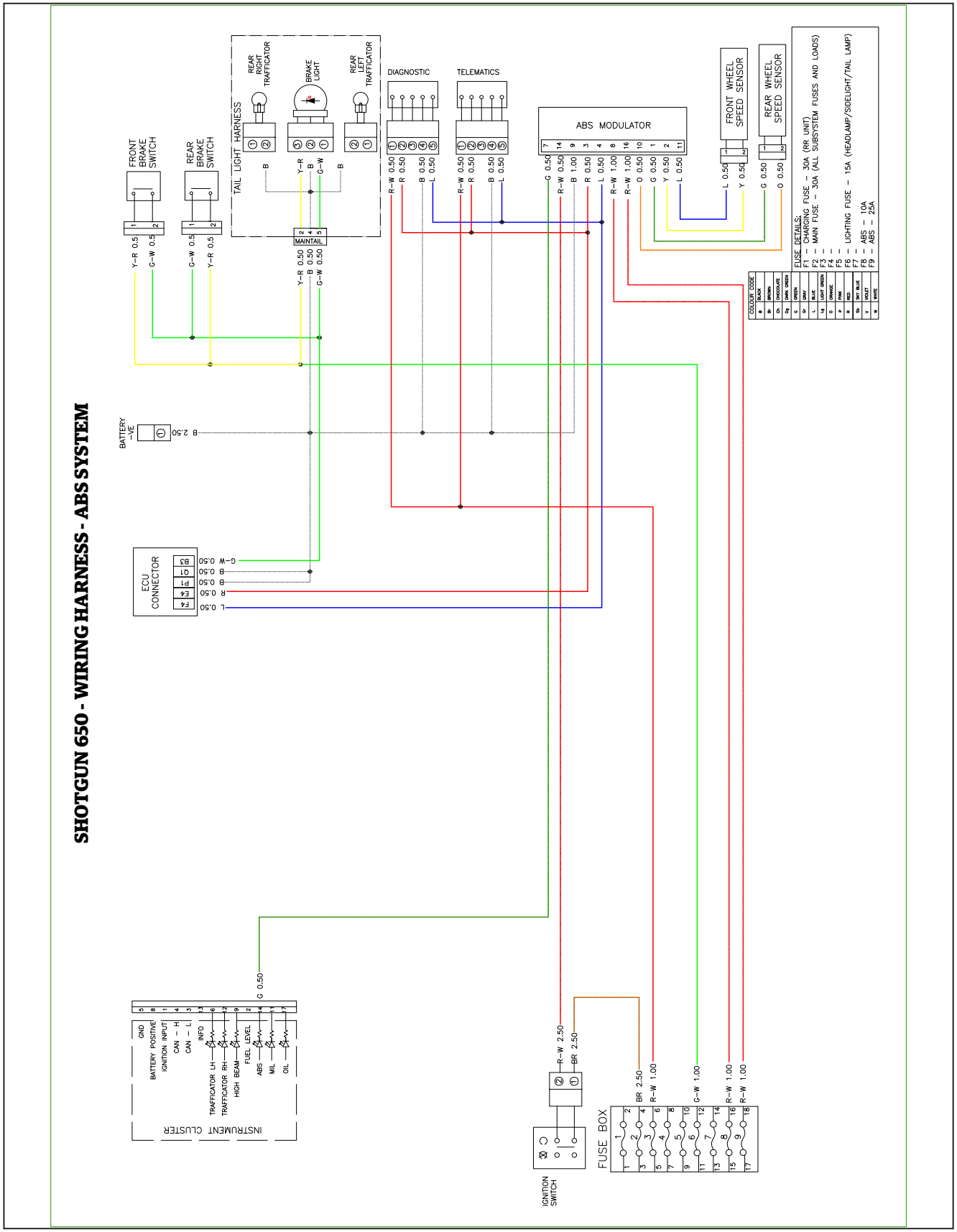

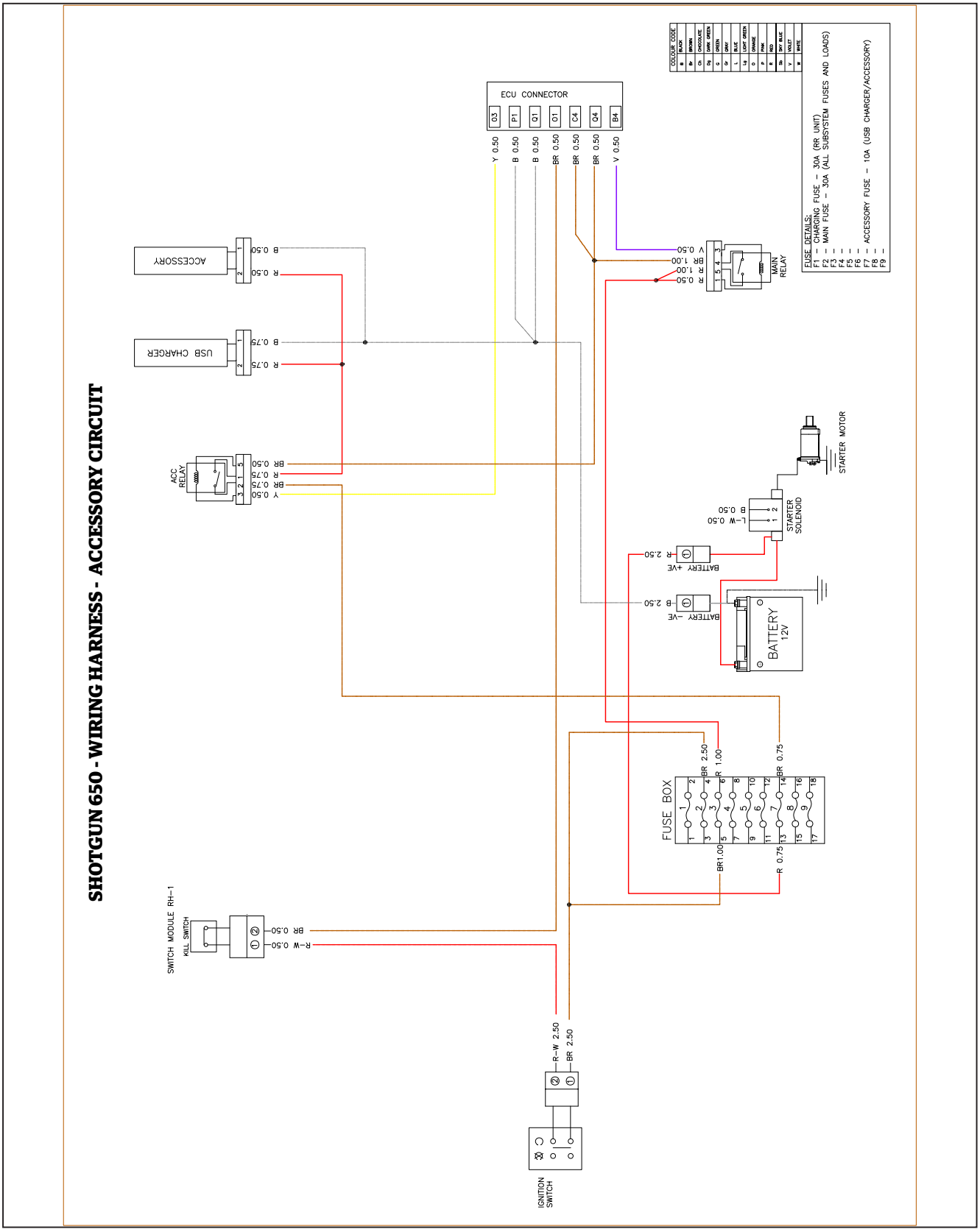
SHOTGUN 650 - WIRING HARNESS - ACCESSORY CIRCUIT
ECU CONNECTOR
03
P1
Q1
O1
C4
Q4
B4
Y 0.50
B 0.50
B 0.50
BR 0.50
BR 0.50
BR 0.50
V 0.50
COLOUR CODE
BLACK
BROWN
CHOCOLATE
DARK GREEN
GREY
LT BLUE
LIGHT GREEN
ORANGE
PINK
RED
SKY BLUE
VIOLET
WHITE
FUSE DETAILS:
F1 – CHARGING FUSE – 30A (RR UNIT)
F2 – MAIN FUSE – 30A (ALL SUBSYSTEM FUSES AND LOADS)
F3 –
F4 –
F5 –
F6 –
F7 – ACCESSORY FUSE – 10A (USB CHARGER/ACCESSORY)
F8 –
F9 –
MAIN RELAY
ACCESSORY
B 0.50
R 0.50
USB CHARGER
B 0.75
R 0.75
ACC RELAY
BR 0.50
R 0.75
BR 0.75
Y 0.50
STARTER MOTOR
STARTER SOLENOID
L-W 0.50
B 0.50
BATTERY +VE
R 2.50
BATTERY -VE
B 2.50
BATTERY 12V
FUSE BOX
BR 2.50
R 1.00
BR 0.75
BR1.00
R 0.75
SWITCH MODULE RH-1
KILL SWITCH
BR 0.50
R-W 0.50
R-W 2.50
BR 2.50
IGNITION SWITCH

SHOTGUN 650 - WIRING HARNESS - CHARGING CIRCUIT

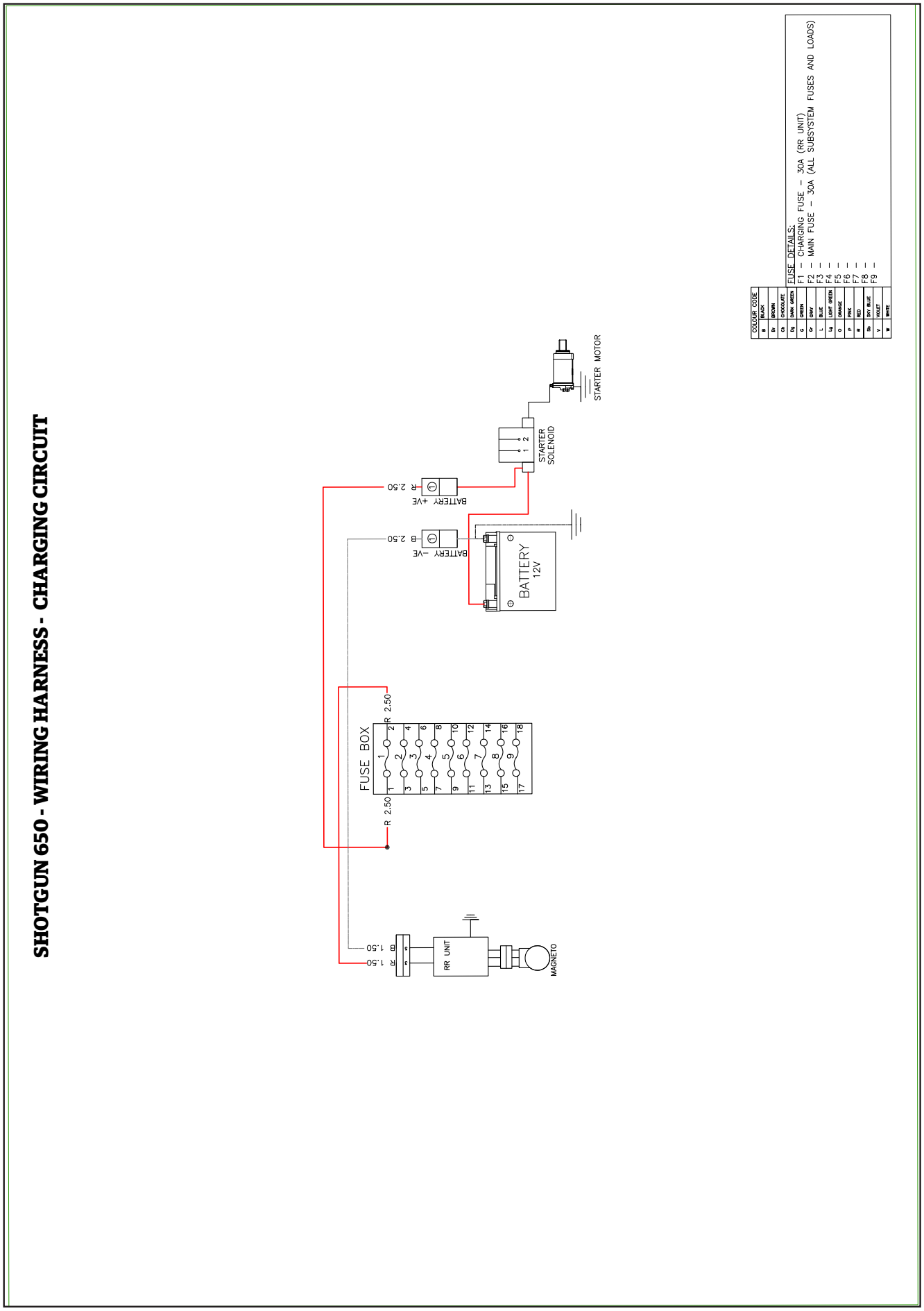

11.4 GROUND CIRCUIT

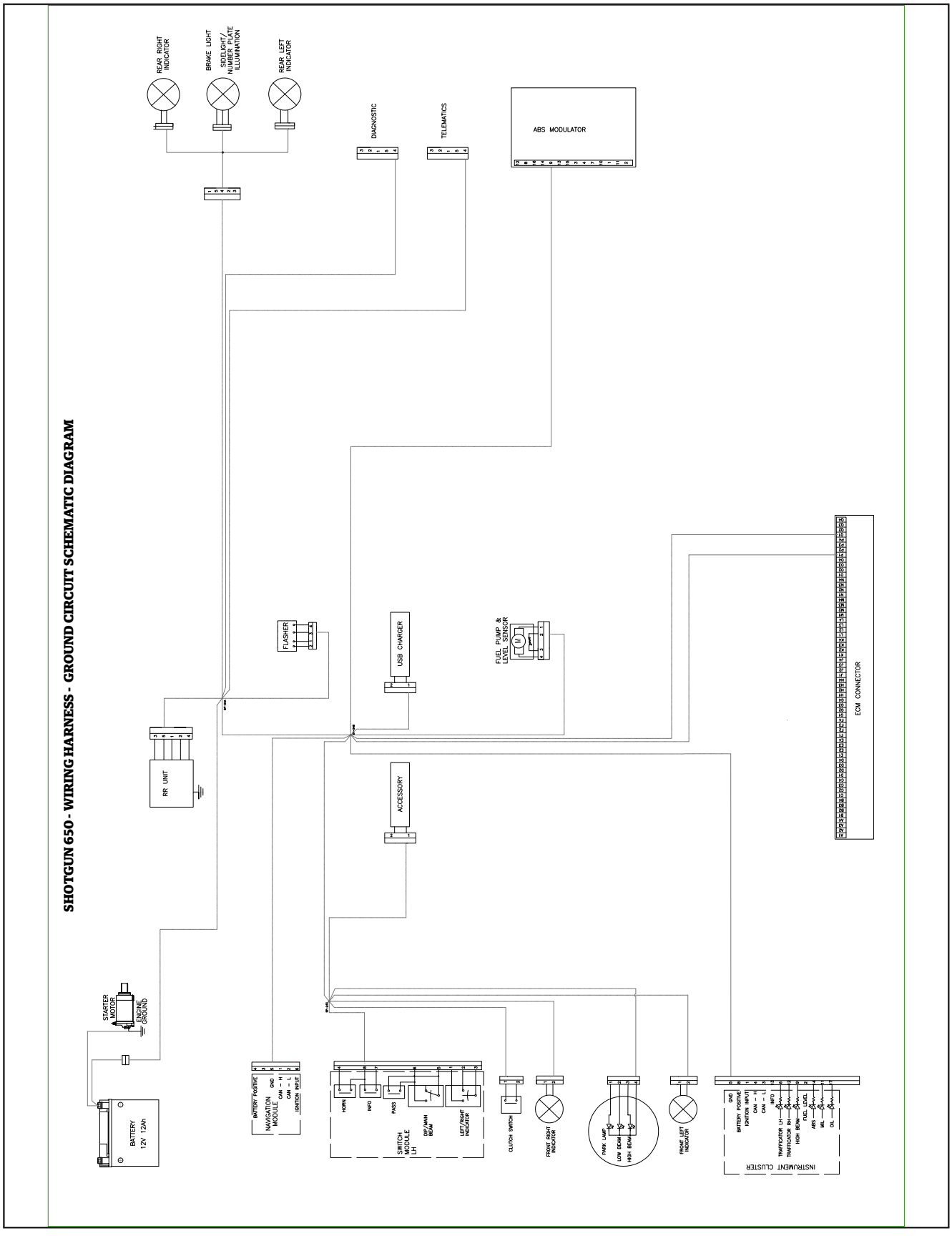

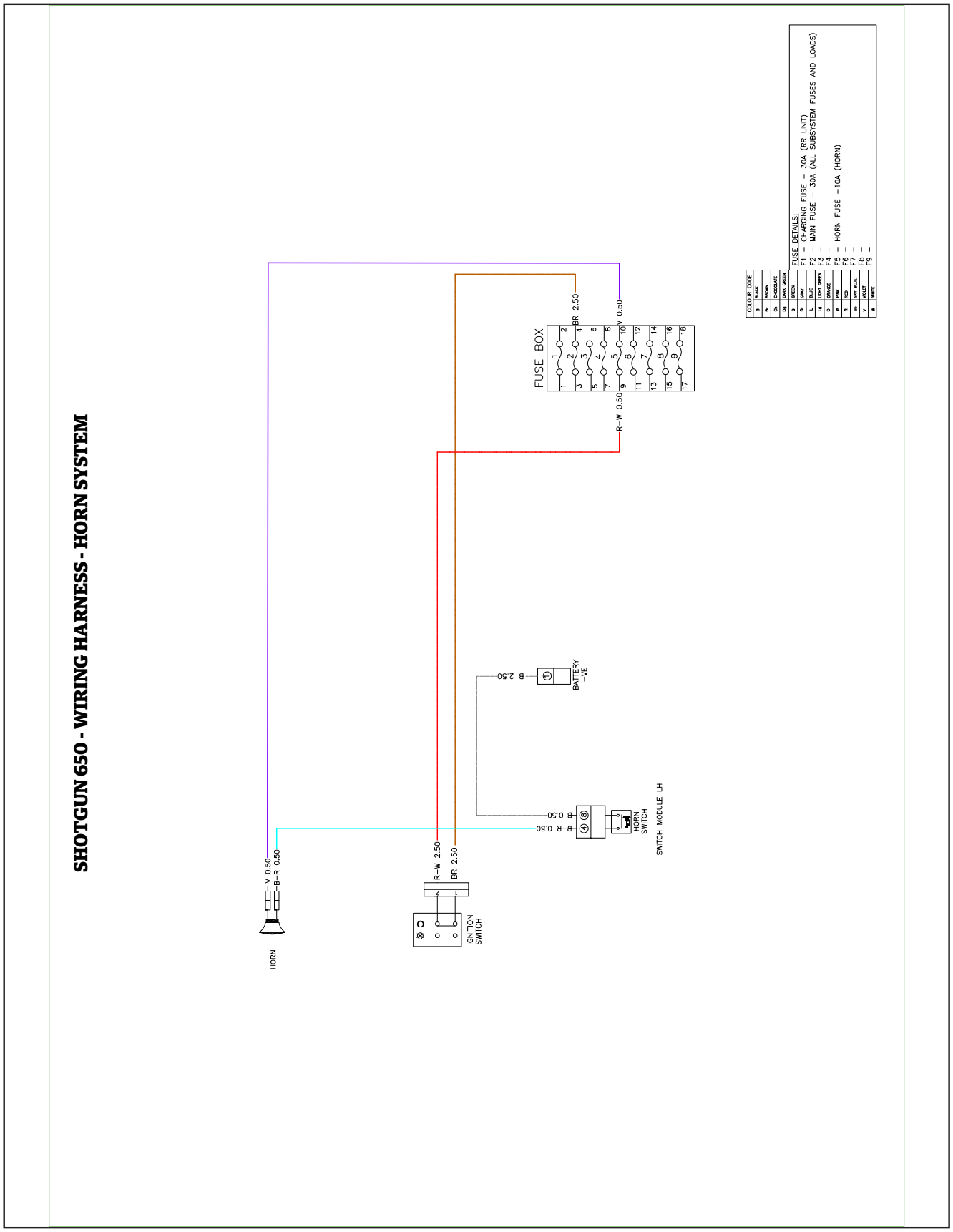
SHOTGUN 650 - WIRING HARNESS - HORN SYSTEM
FUSE DETAILS:
F1 – CHARGING FUSE – 30A (RR UNIT)
F2 – MAIN FUSE – 30A (ALL SUBSYSTEM FUSES AND LOADS)
F3 –
F4 –
F5 – HORN FUSE –10A (HORN)
F6 –
F7 –
F8 –
F9 –
COLOUR CODE
B BLACK
Br BROWN
Ch DARK GREEN
G GREEN
Gr GREY
L BLUE
Lg LIGHT GREEN
O ORANGE
P PINK
R RED
Sb SKY BLUE
V VIOLET
W WHITE
FUSE BOX
BR 2.50
V 0.50
R–W 0.50
B 2.50
BATTERY –VE
B 0.50
R 0.50
HORN SWITCH
SWITCH MODULE LH
R–W 2.50
BR 2.50
IGNITION SWITCH
V 0.50
B–R 0.50
HORN

11.6 IGNITION CIRCUIT

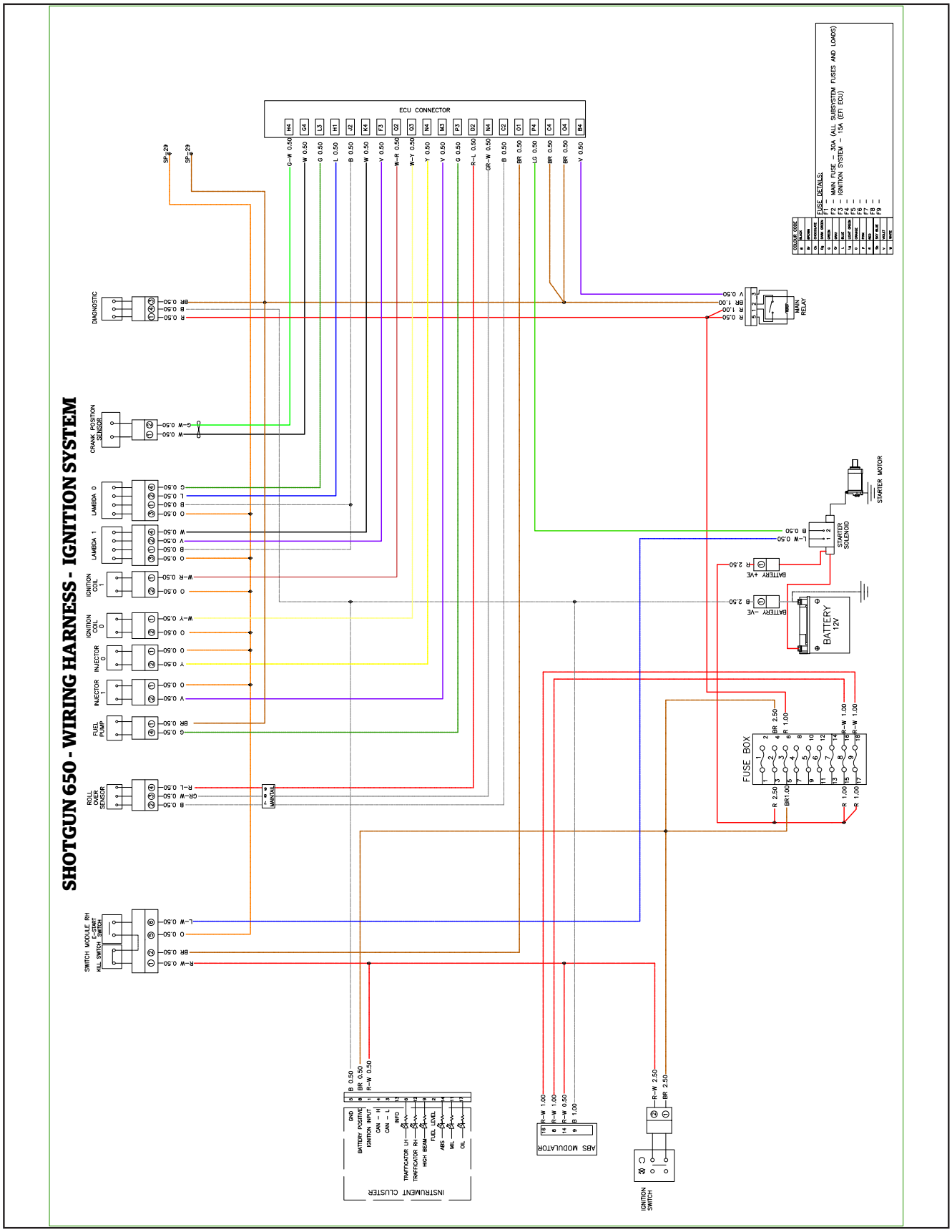

11.7 LIGHTING CIRCUIT

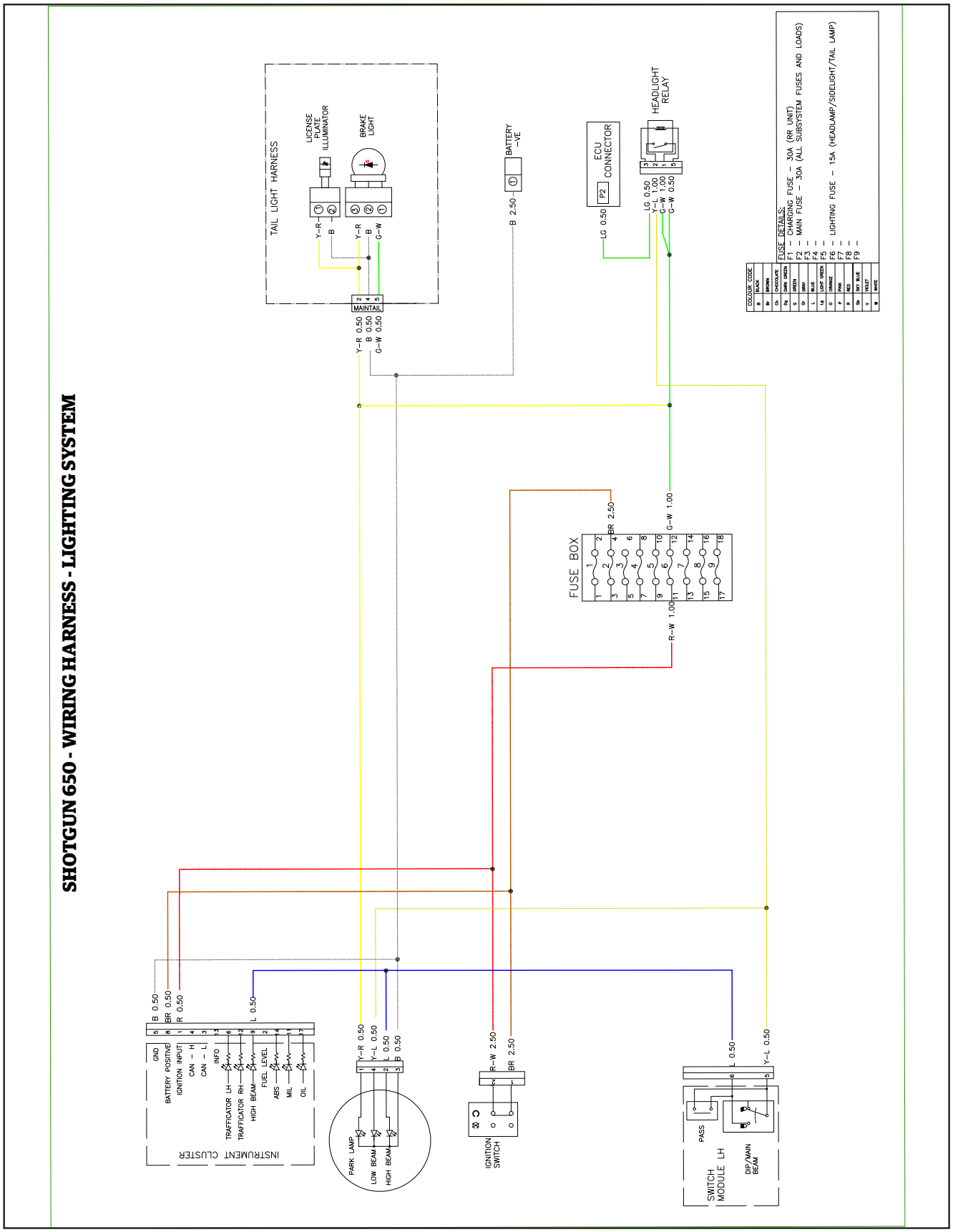

11.8 COMPLETE SCHEMATIC

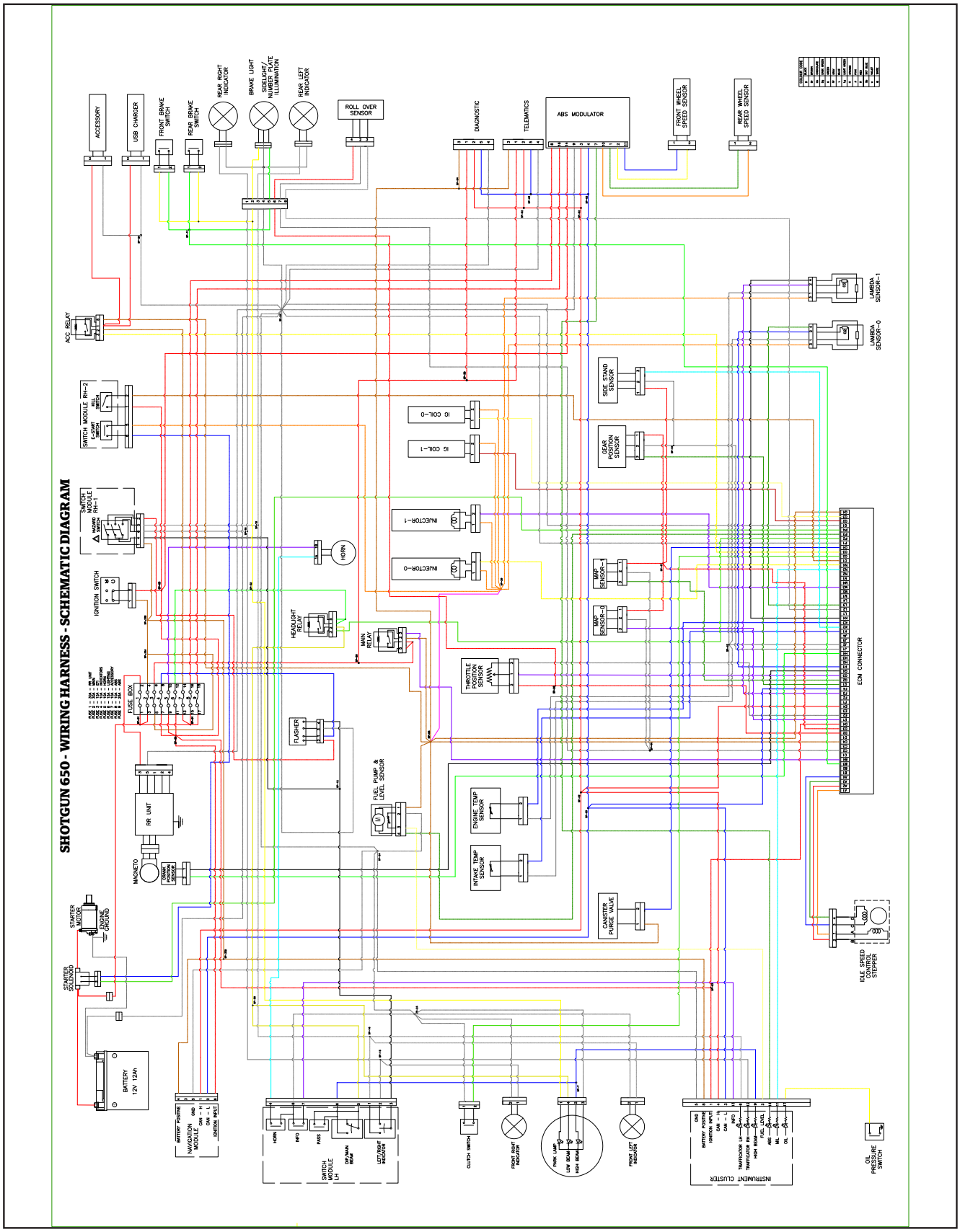

11.9 SIGNALING CIRCUIT

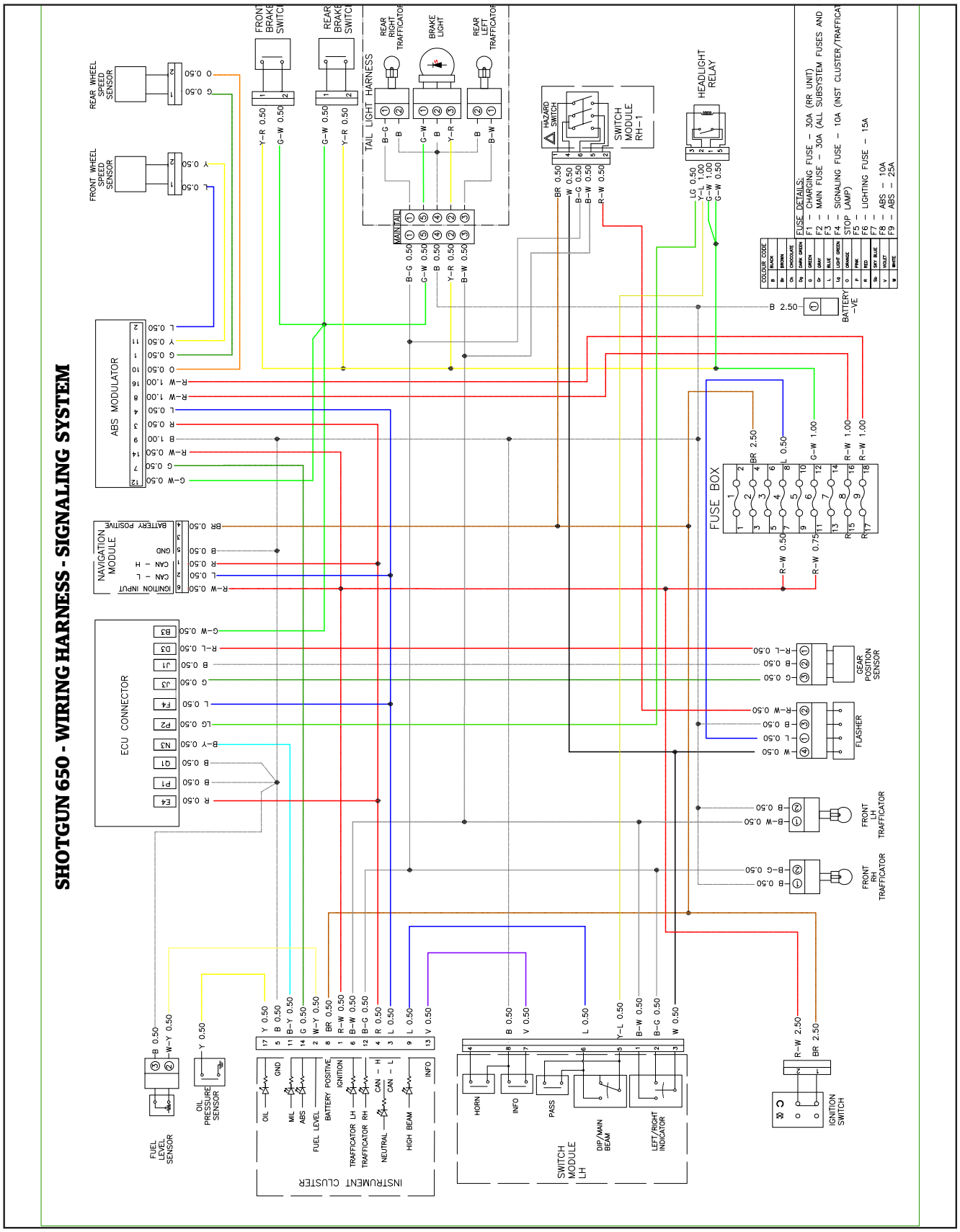

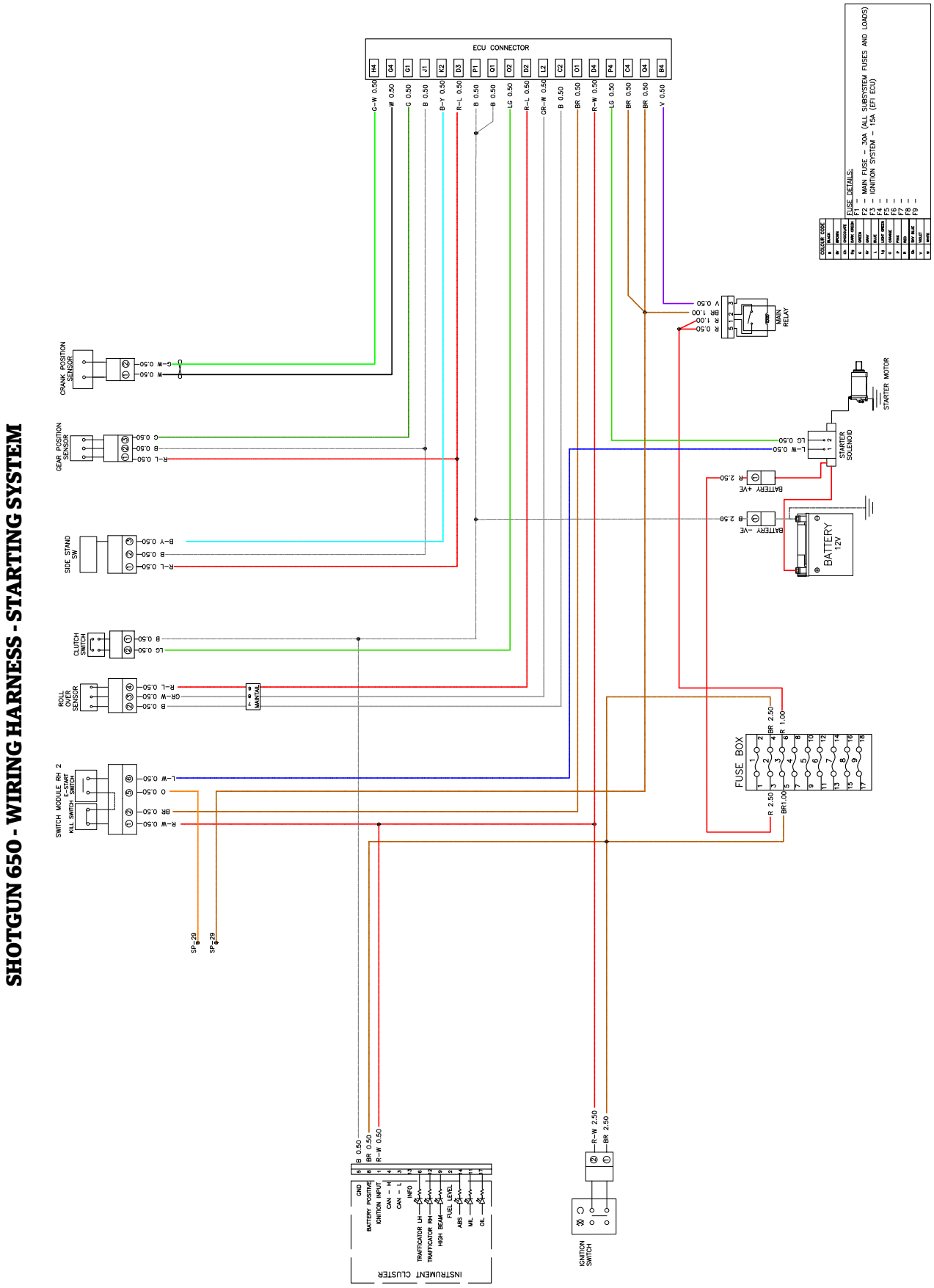
SHOTGUN 650 - WIRING HARNESS - STARTING SYSTEM
ECU CONNECTOR
FUSE DETAILS:
F1 –
F2 – MAIN FUSE – 30A (ALL SUBSYSTEM FUSES AND LOADS)
F3 – IGNITION SYSTEM – 15A (EFI ECU)
F4 –
F5 –
F6 –
F7 –
F8 –
F9 –
MAIN RELAY
STARTER MOTOR
STARTER SOLENOID
BATTERY +VE
BATTERY -VE
BATTERY 12V
FUSE BOX
CRANK POSITION SENSOR
GEAR POSITION SENSOR
SIDE STAND SW
CLUTCH SWITCH
ROLL OVER SENSOR
SWITCH MODULE RH 2
KILL SWITCH
START SWITCH
IGNITION SWITCH
INSTRUMENT CLUSTER
GND
BATTERY POSITIVE
IGNITION INPUT
CAN – H
CAN – L
INFO
TRAFFICATOR LH
TRAFFICATOR RH
HIGH BEAM
FUEL LEVEL
ABS
MIL
OIL

SHOWA - USD SUSPENSION DISASSEMBLY AND ASSEMBLY PROCEDURE

CONTENTS **PAGE**

12 Suspension 707

Dismantling.....707

12.1. Front fork LH..... 707

12.2. Front fork RH 711

Inspection 715

12.3. Front Fork Leg.....715

Assembly 715

12.4. Front Fork RH.....715

12.5. Front Fork LH 719

12. Suspension

Dismantling

12.1. Front Fork LH

- Loosen and remove the fork bolt **(a)** using special tool.

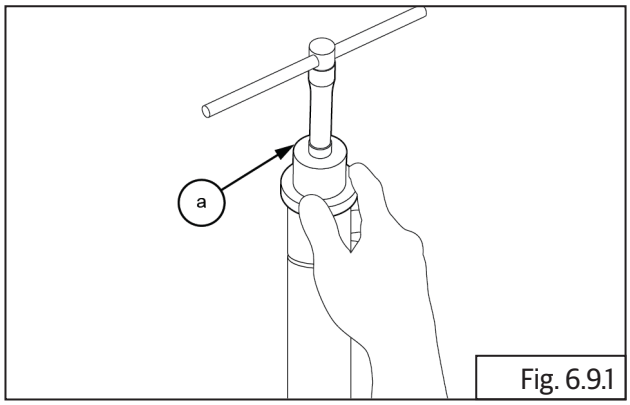

Fig. 6.9.1

SPL 	Part No: ST-31884-a
	Part Name: USD Fork Nut Remover And Installer

- Gently lift the fork bolt.
- Hold and loosen the bottom lock nut and remove fork bolt **(a)** .

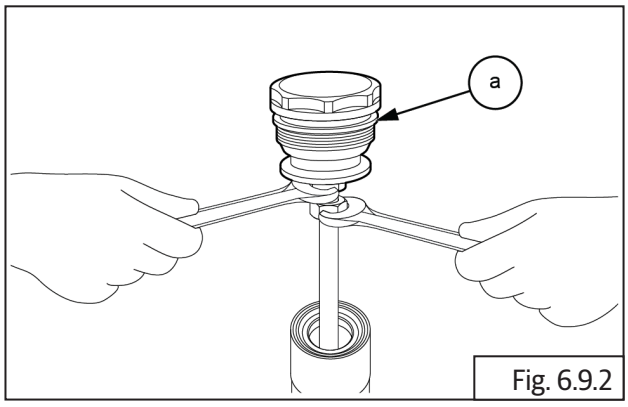

Fig. 6.9.2

	17 mm Double end spanner 14 mm Double end spanner

- Gently invert fork assembly into a clean tray to collect the fork oil coming out of main tube.
- Hold fork (a) inverted and pump main tube into fork end several times till oil in the fork end drains out completely.

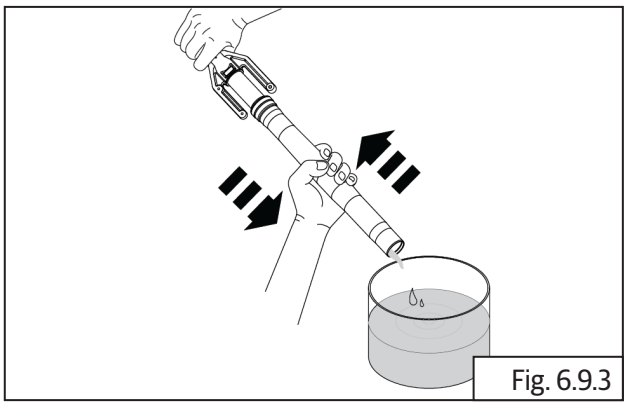
Fig. 6.9.3

- Remove the dust seal **(a)** from fork.

⚠ CAUTION

When using sharp edge tools, be careful not to damage the seals and fork tube surface..

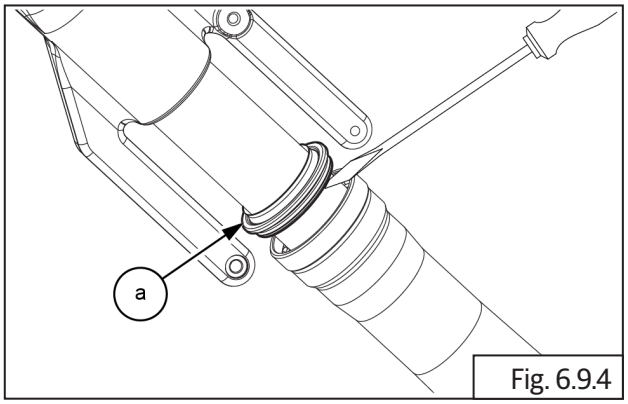

Fig. 6.9.4

	Flat head screw driver

- Remove the Oil seal stopper **(a)** from fork.

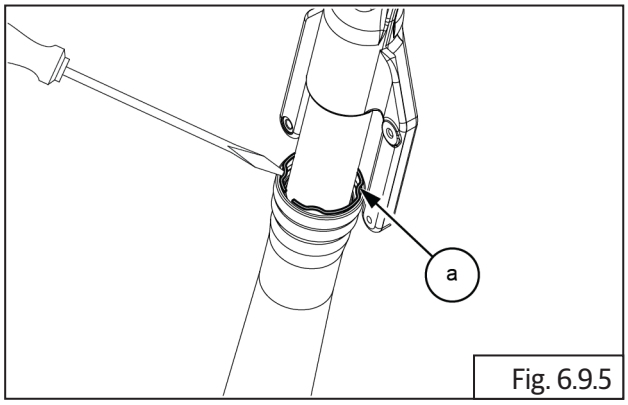

Fig. 6.9.5

	Small flate screw driver

- Hold bottom tube firmly and move outer tube quickly up and down to remove slide pipe **(a)**.

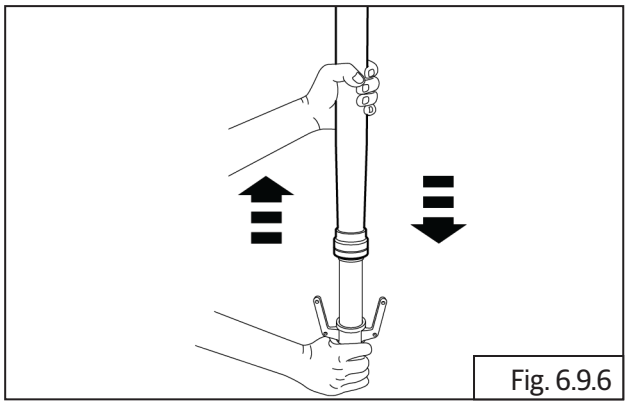
Fig. 6.9.6

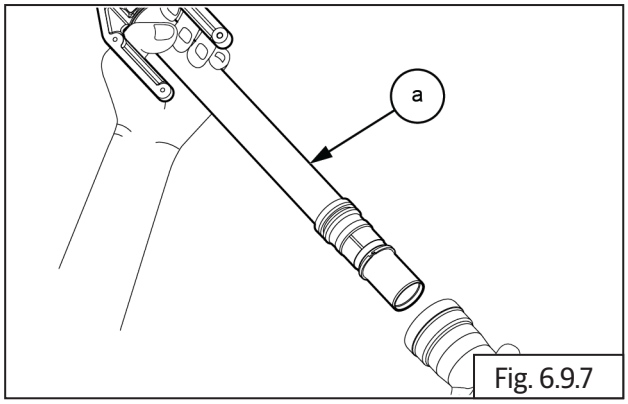

Fig. 6.9.7

- Remove the slide bush **(a)** from slide pipe.

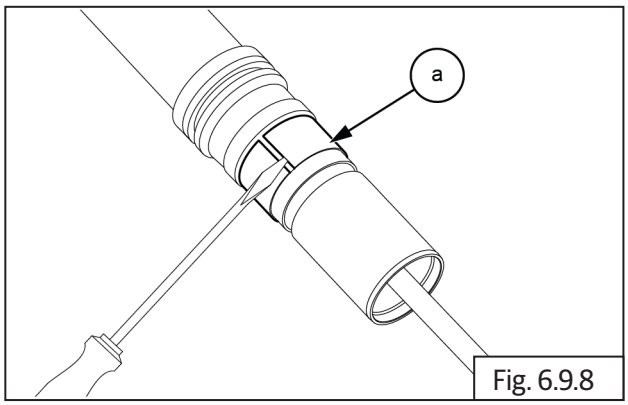

Fig. 6.9.8

	Flat head screw driver

- Remove the Guide bush **(a)** from slide pipe.

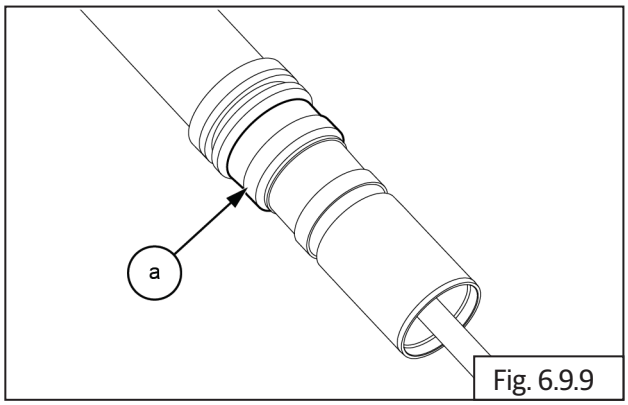

Fig. 6.9.9

- Remove the Seal spacer **(a)** from slide pipe.

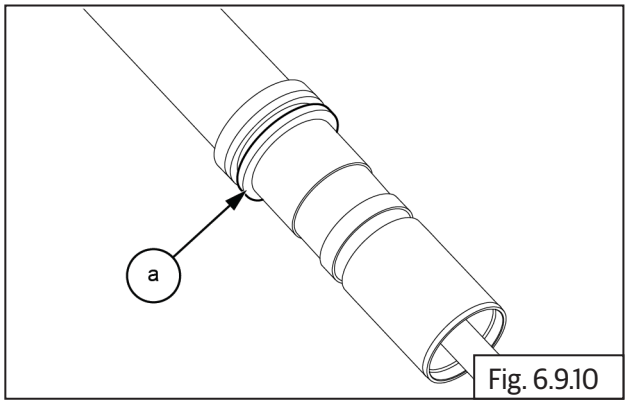

Fig. 6.9.10

- Remove the Oil seal **(a)** from slide pipe.

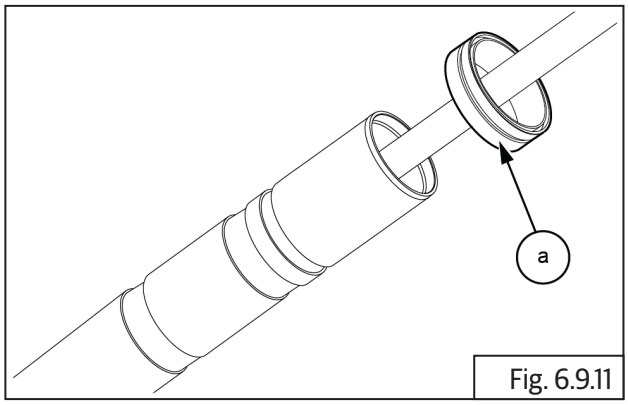

Fig. 6.9.11

- Remove the Oil seal stopper **(a)** from slide pipe.

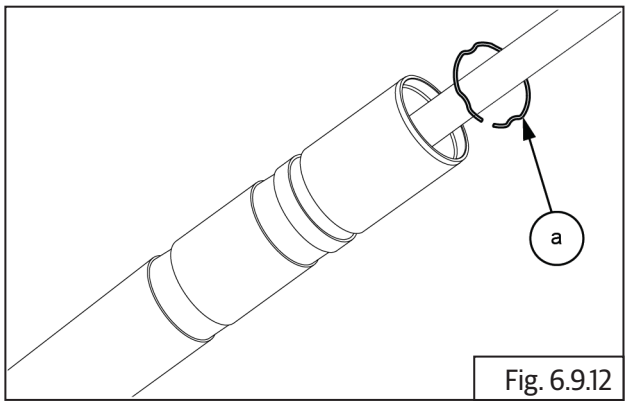

Fig. 6.9.12

- Remove the dust seal **(a)** from frok.

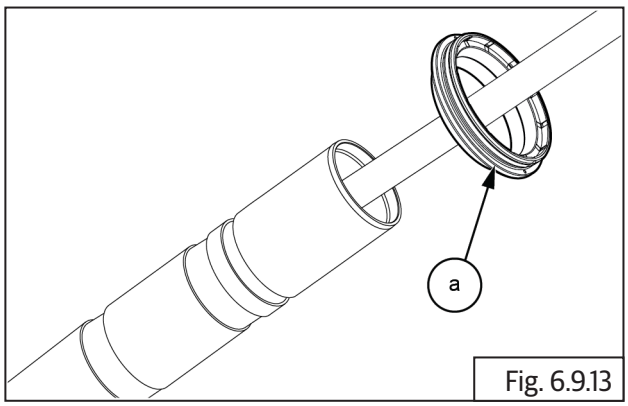

Fig. 6.9.13

- insert the gauge **(a)** on the fork top

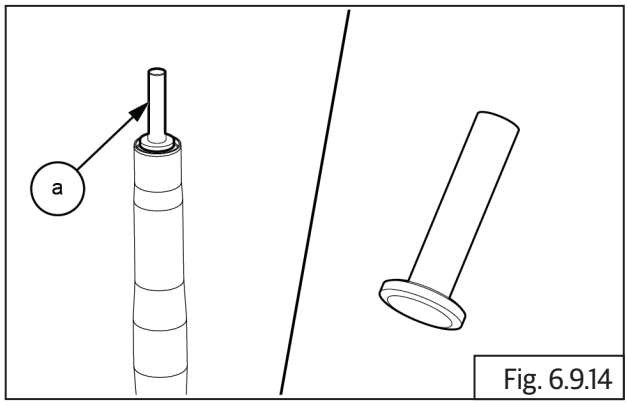

Fig. 6.9.14

SPL	Part No: ST-31895-a
	Part Name: Swing Arm NRB Bearing Remover Tool

- Locate the fork assembly with gauge **(a)** into USD Stopper Ring Removal Jig.
- Tighten the top bolt to push down stopper until stopper ring comes out.

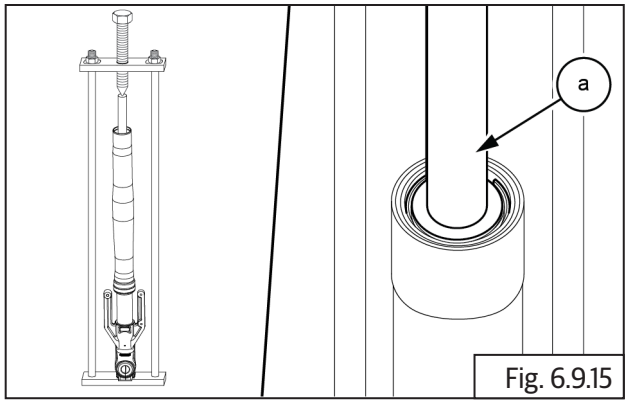

Fig. 6.9.15

SPL	Part No: ST-31886-a
	Part Name: USD Stopper Ring Removal Jig

	24mm Double end Spanner 17mm Double end Spanner

- Remove the stopper ring **(a)** from fork tube using special tool.

⚠ CAUTION

Take care when removing the stopper ring from the fork tube.

Use special tools to avoid damaging the stopper ring curve.

Ensure that the stopper ring is removed safely and without damage.

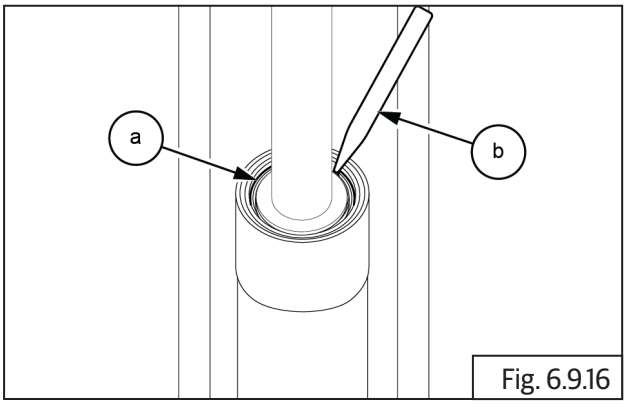

Fig. 6.9.16

SPL	Part No: ST-31887-a
	Part Name: USD Stopper Ring Remover

- Remove fork assembly **(a)** from special tool jig.

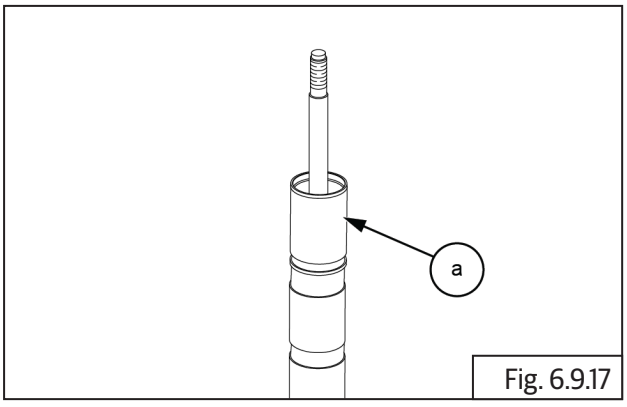

Fig. 6.9.17

- insert the piston removal tool **(a).**
- Install the adptor on the piston rod **(b)** and tighten the nut.
- Slide up and down to remove piston from fork assembly.

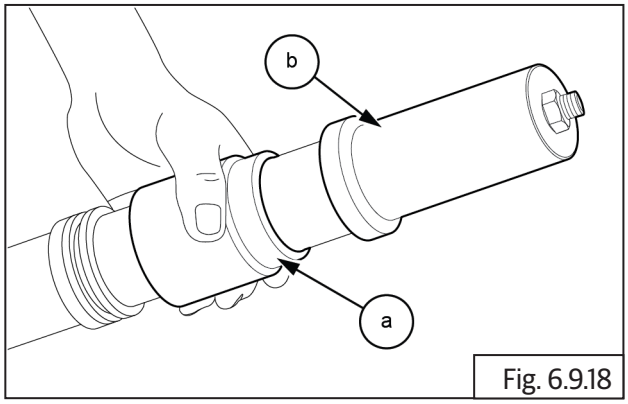

Fig. 6.9.18

SPL 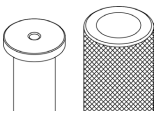	Part No: ST-31888-a
	Part Name: USD Piston Comp. Remover

	14mm Double end Spanner

- Remove the spring **(a)** from fork body.

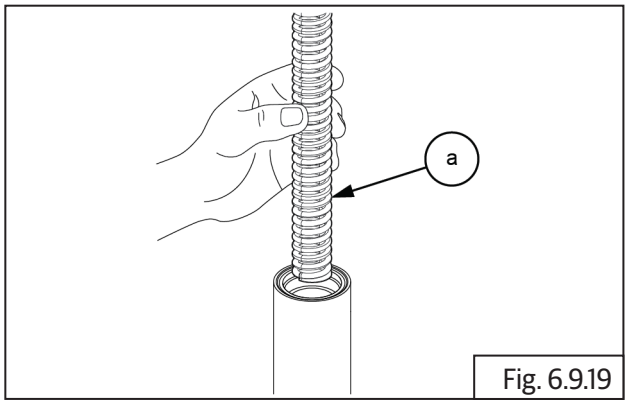

Fig. 6.9.19

- Remove the special **(a)** from piston assembly.

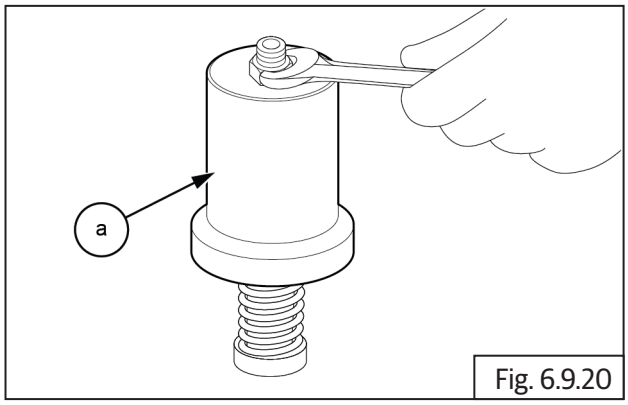

Fig. 6.9.20

	14mm Double end Spanner.

- Remove the piston rod **(a)** spring **(b)** and washer **(c)**

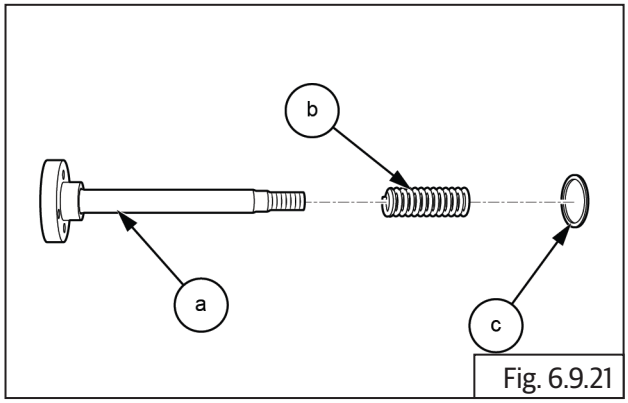

Fig. 6.9.21

12.2. Front Fork RH

- Loosen and remove the fork bolt **(a)** using special tool.

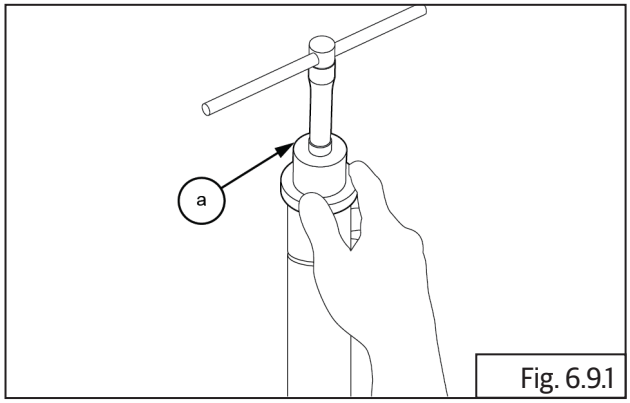

Fig. 6.9.1

SPL	Part No: ST-31884-a
	Part Name: USD Fork Nut Remover And Installer

- Gently lift the fork bolt.
- Hold and loosen the bottom lock nut and remove fork bolt **(a)** .

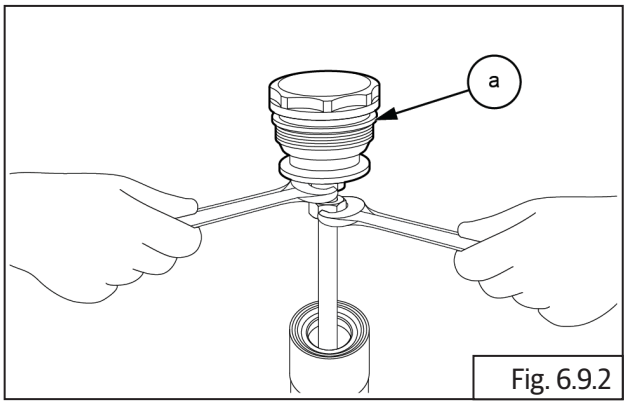

Fig. 6.9.2

	17 mm Double end spanner 14 mm Double end spanner

- Gently invert fork assembly into a clean tray to collect the fork oil coming out of main tube.
- Hold fork (a) inverted and pump main tube into fork end several times till oil in the fork end drains out completely.

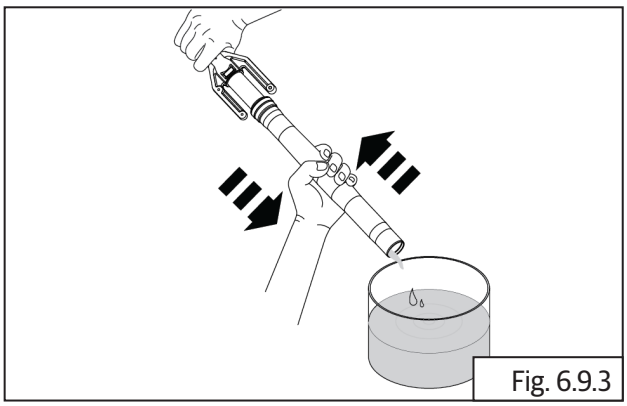
Fig. 6.9.3

- Remove the dust seal **(a)** from fork.

⚠ CAUTION

When using sharp edge tools, be careful not to damage the seals and fork tube surface..

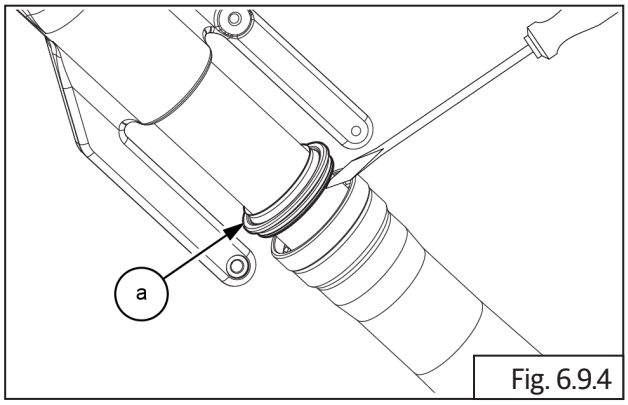

Fig. 6.9.4

	Flat head screw driver

- Remove the Oil seal stopper **(a)** from fork.

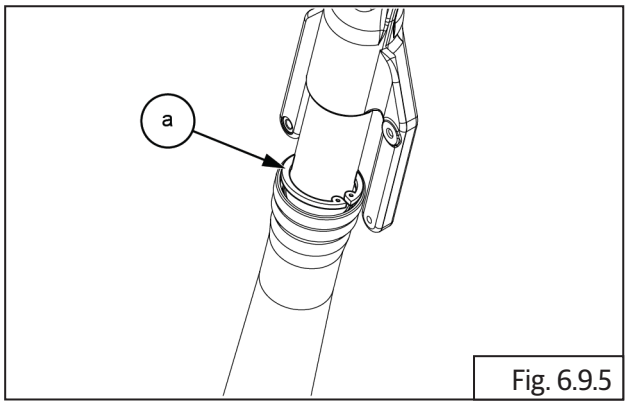

Fig. 6.9.5

	circlip plier

- Hold bottom tube firmly and move outer tube quickly up and down to remove slide pipe **(a)**.

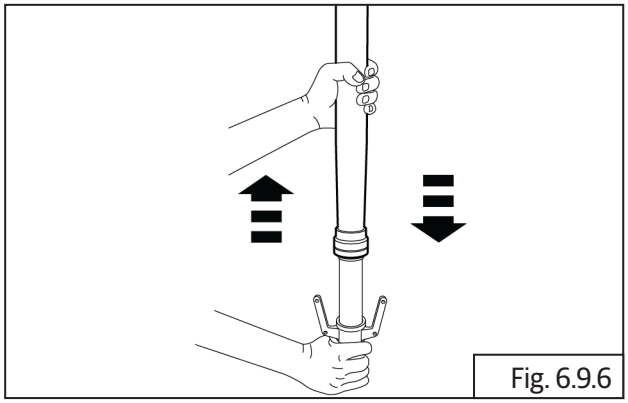
Fig. 6.9.6

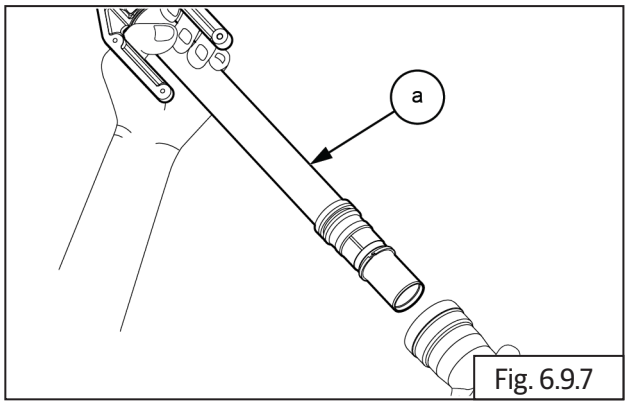

Fig. 6.9.7

- Remove the slide bush **(a)** from slide pipe.

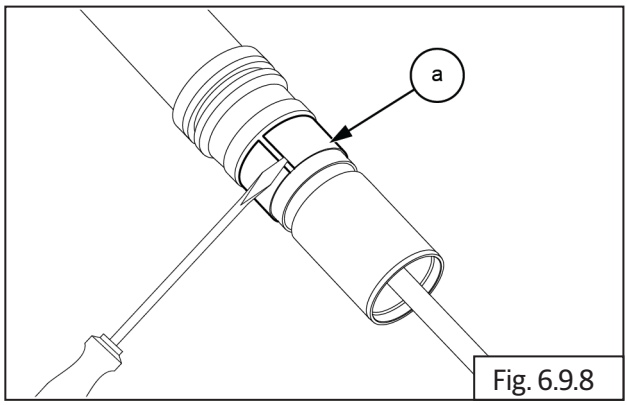

Fig. 6.9.8

- Remove the Guide bush **(a)** from slide pipe.

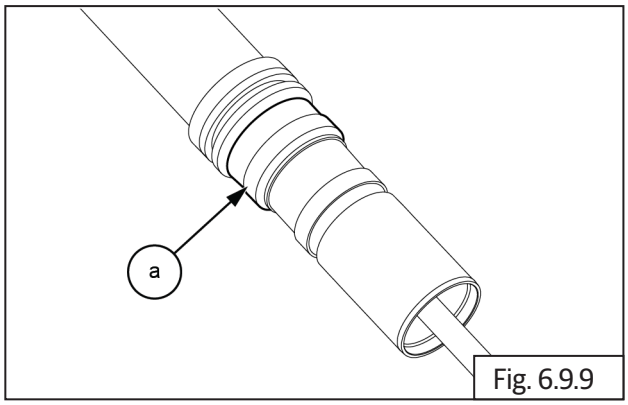

Fig. 6.9.9

- Remove the Seal spacer **(a)** from slide pipe.

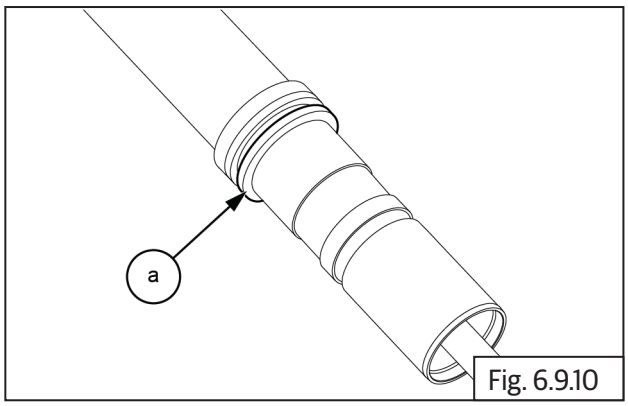

Fig. 6.9.10

- Remove the Oil seal **(a)** from slide pipe.

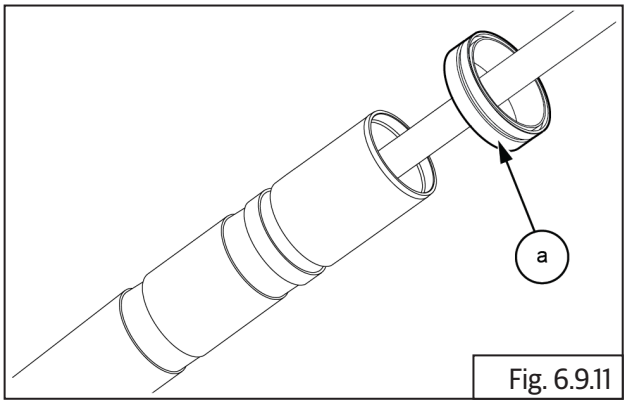

Fig. 6.9.11

- Remove the snap ring. **(a)** from slide pipe.

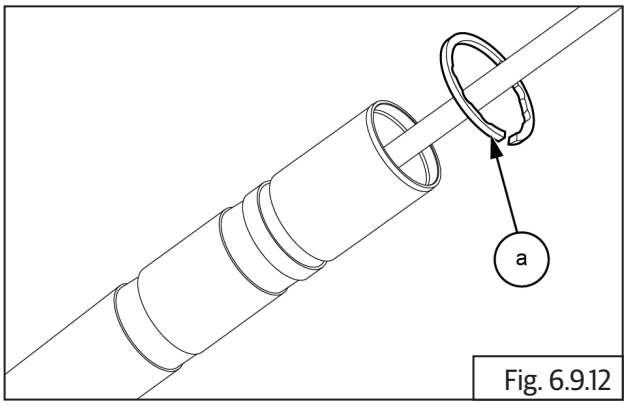

Fig. 6.9.12

- Remove the dust seal **(a)** from frok body.

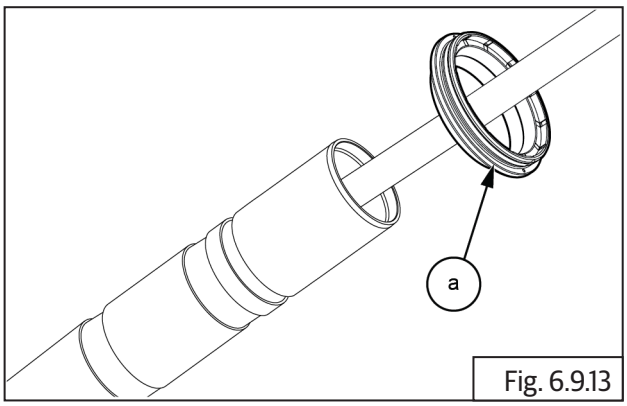

Fig. 6.9.13

- insert the gauge **(a)** on the fork top

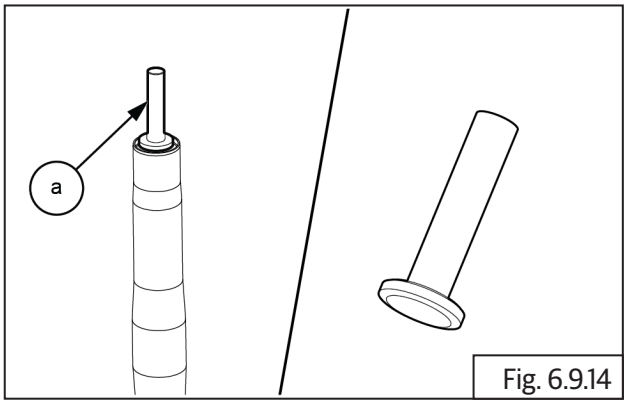

Fig. 6.9.14

SPL	Part No: ST-31895-a
	Part Name: Swing Arm NRB Bearing Remover Tool

- Locate the fork assembly with gauge **(a)** into USD Stopper Ring Removal Jig.
- Tighten the top bolt to push down stopper until stopper ring comes out.

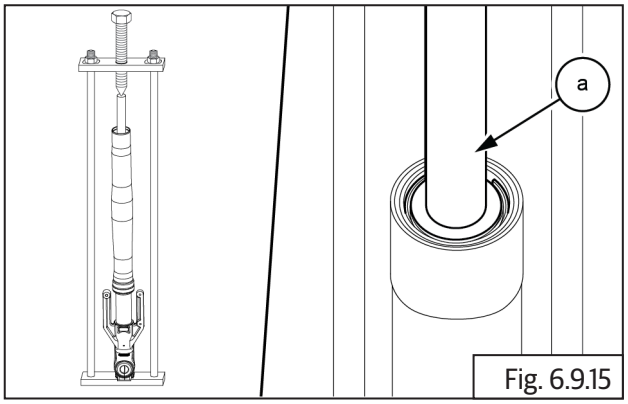

Fig. 6.9.15

SPL	Part No: ST-31886-a
	Part Name: USD Stopper Ring Removal Jig

	24mm Double end Spanner 17mm Double end Spanner

- Remove the stopper ring **(a)** from fork tube using special tool.

⚠ CAUTION

Take care when removing the stopper ring from the fork tube.

Use special tools to avoid damaging the stopper ring curve.

Ensure that the stopper ring is removed safely and without damage.

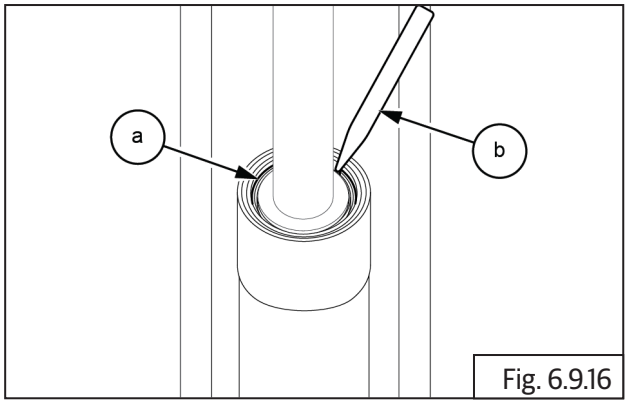

Fig. 6.9.16

SPL	Part No: ST-31887-a
	Part Name: USD Stopper Ring Remover

- Remove fork assembly **(a)** from special tool jig.

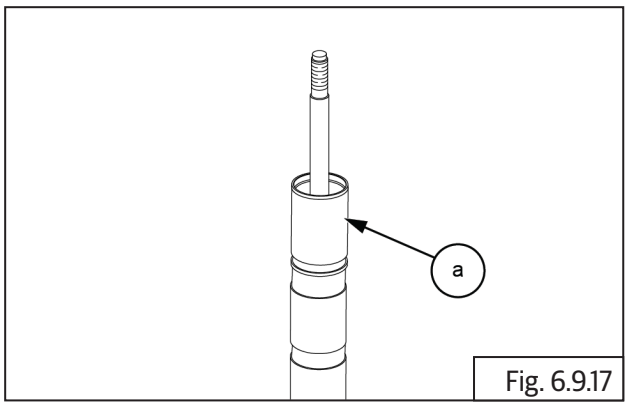

Fig. 6.9.17

- insert the piston removal tool **(a).**
- Install the adptor on the piston rod **(b)** and tighten the nut.
- Slide up and down to remove piston from fork assembly.

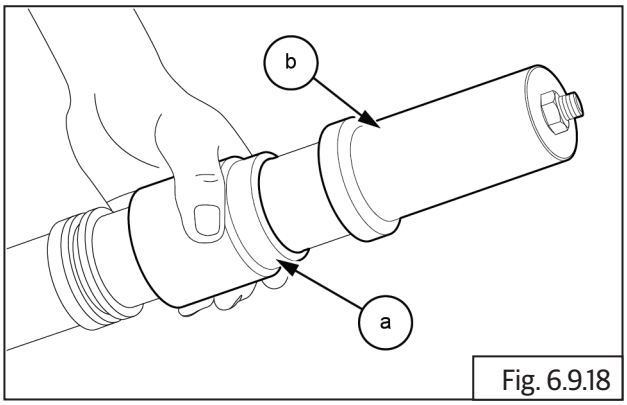

Fig. 6.9.18

SPL 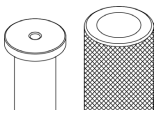	Part No: ST-31888-a
	Part Name: USD Piston Comp. Remover

	14mm Double end Spanner

- Remove the spring **(a)** from fork body.

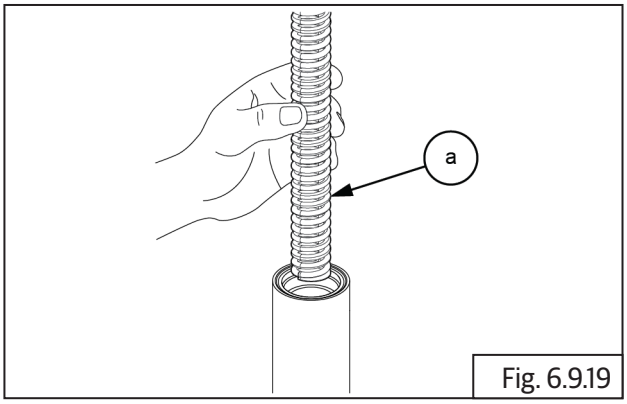

Fig. 6.9.19

- Remove the spring **(a)** from fork body.

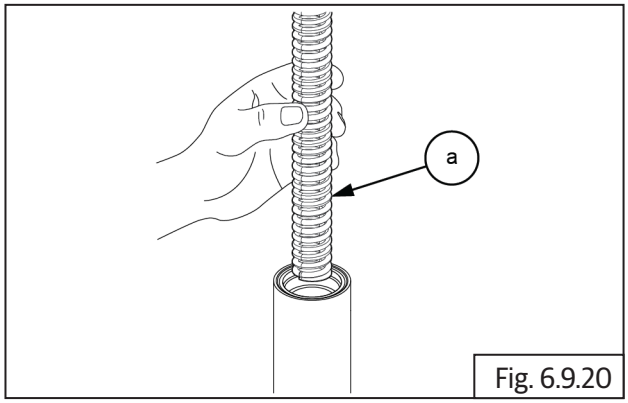

Fig. 6.9.20

- Remove the piston assembly **(a)** from adaptor.

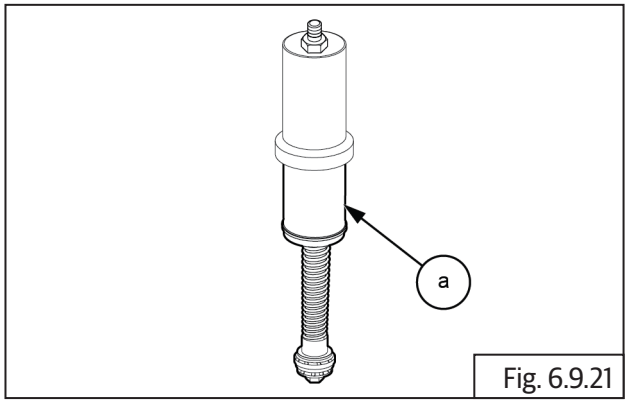

Fig. 6.9.21

	14mm Double end Spanner.

Inspection

12.3. Front Fork Leg

- Inspect main tube for any scratches are bend if found replace the main tube..

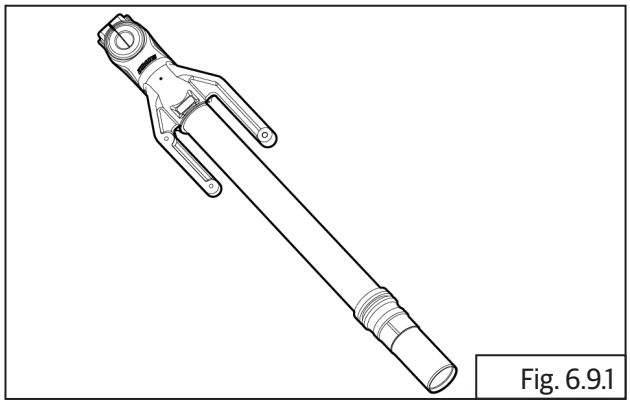
Fig. 6.9.1

- Inspect main tubes for any bends using dial gauge.
- Inspect fork ends inner side for any damages and scratches. Replace if found damaged.
- Inspect fork ends for any cracks- especially at oil seated area. Replace if cracked.
- Inspect piston for any damages/scratches. Replace if damaged.

Assembly

12.4. Front Fork RH

NOTE
• *Apply grease to seal and bush press-fit area of outer tube and oil seal lip part.*

- Locate and install the dust seal **(a)** into slide pipe.

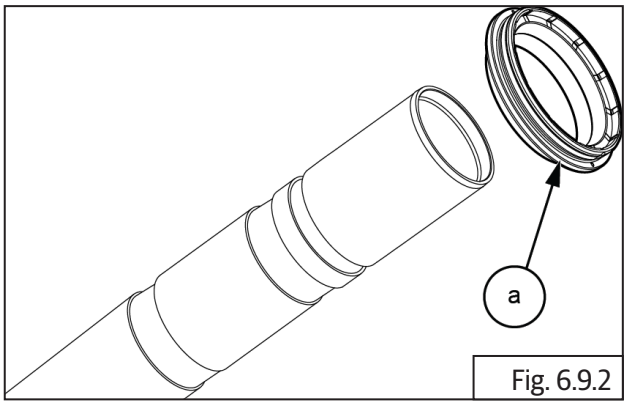

Fig. 6.9.2

- Locate and install the snap ring **(a)** into slide pipe.

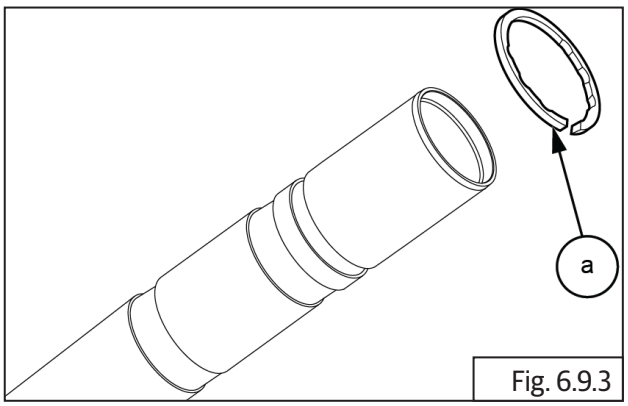

Fig. 6.9.3

NOTE
• Oil seal has a direction. Insert engraved side (surface) to axle holder side.

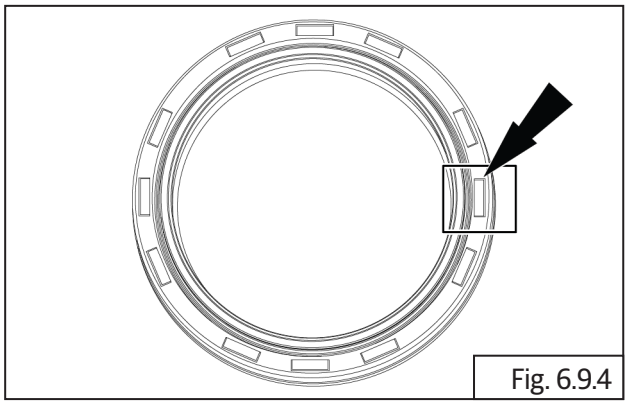

Fig. 6.9.4

- Locate and install the oil seal **(a)** into slide pipe.

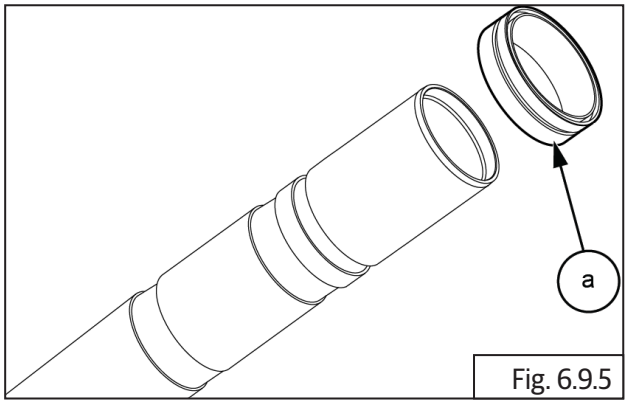

Fig. 6.9.5

- Locate and install the seal spacer **(a)** into slide pipe.

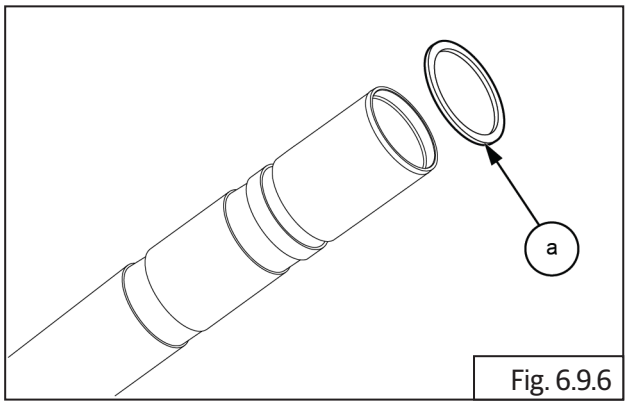

Fig. 6.9.6

- Locate and install the Guide bush **(a)** into slide pipe.

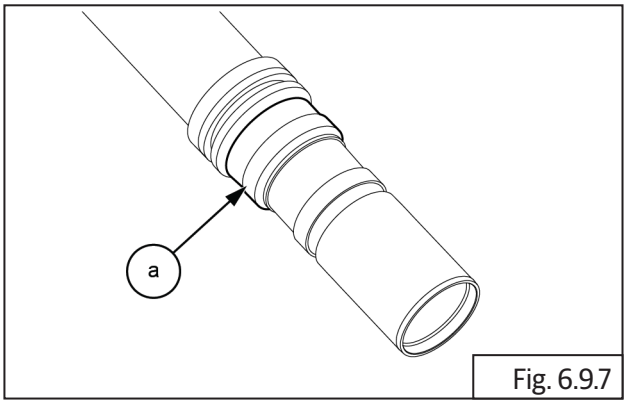

Fig. 6.9.7

- Locate and install the slide bush **(a)** into slide pipe.

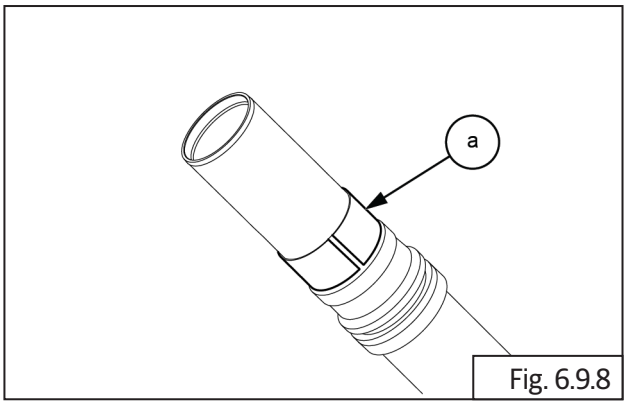

Fig. 6.9.8

- Apply grease thinly to the outer side of guide bush oil seal.

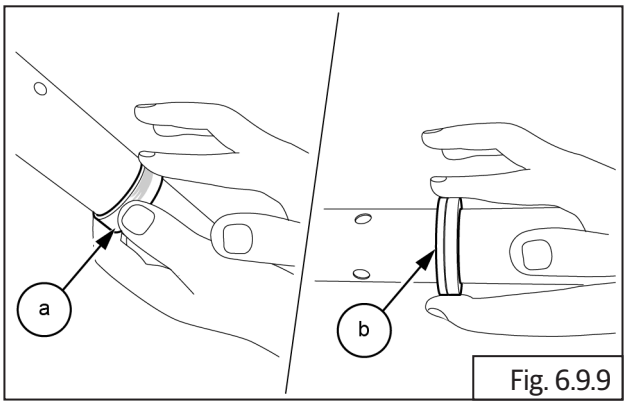

Fig. 6.9.9

- Install the slide pipe **(a)** into fork body.

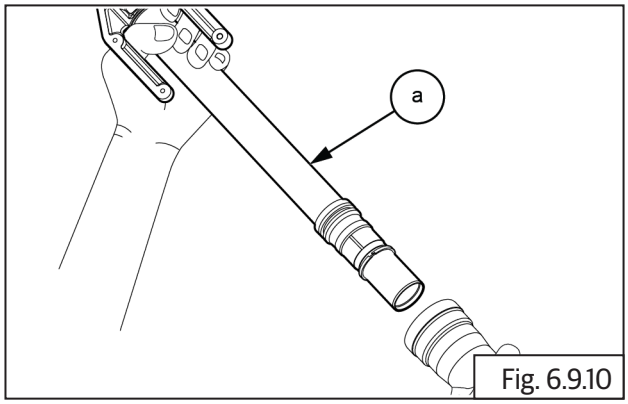

Fig. 6.9.10

- Locate and install the oil seal **(a)** into fork body using special tool.

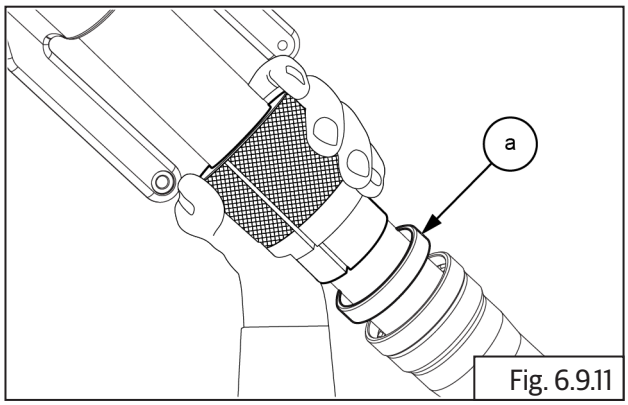

Fig. 6.9.11

SPL	Part No: ST-31885-a
	Part Name: USD Dust Seal And Oil Seal Installer

- Install the snap ring **(a)** into fork body.

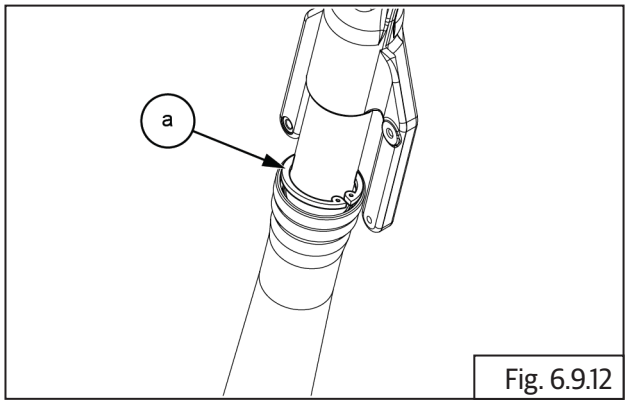

Fig. 6.9.12

	circlip plier

- Press the dust seal **(a)** into fork body using special tool.

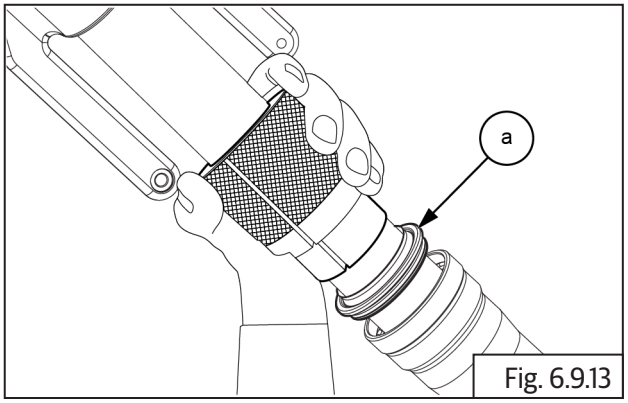

Fig. 6.9.13

SPL	Part No: ST-31885-a
	Part Name: USD Dust Seal And Oil Seal Installer

- Install the spring **(a)** inside the fork body.

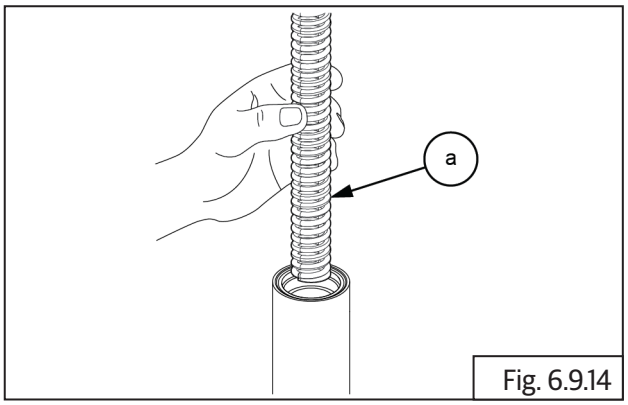

Fig. 6.9.14

- Fill recommended fork oil into main tube.

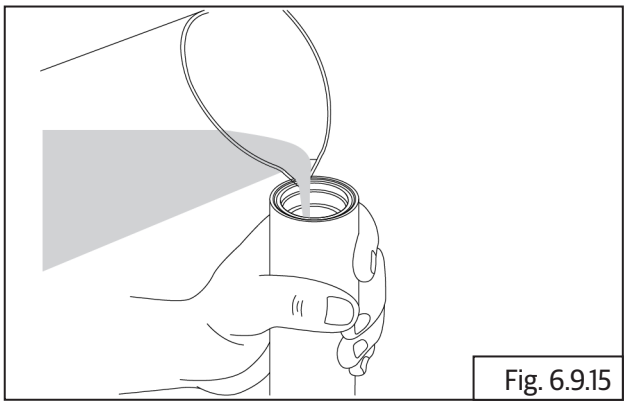
Fig. 6.9.15

Quantity:	578ml
Oil grade:	SS- 47G

- Locate the piston assembly **(a)** into fork body.

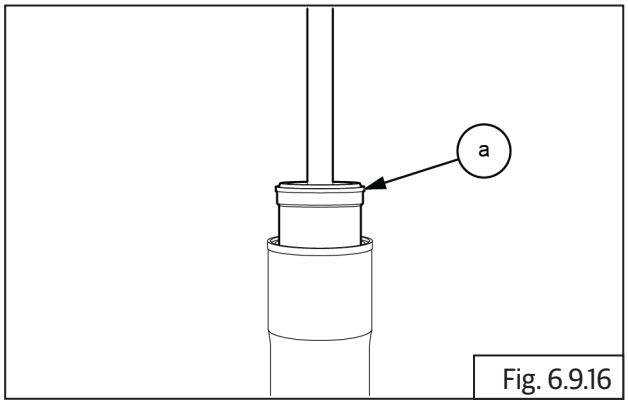

Fig. 6.9.16

- using special tool **(a)** and assembly fork into USD Stopper Ring jig.

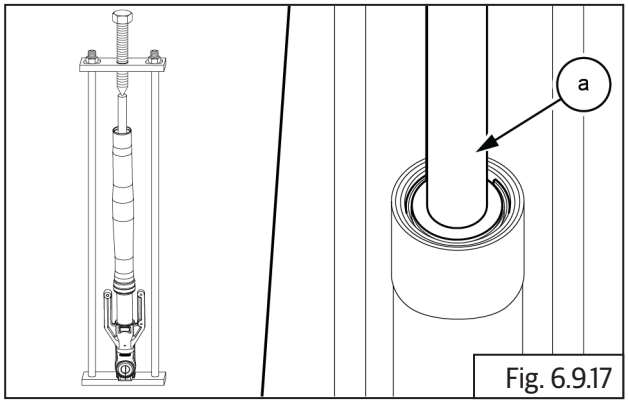

Fig. 6.9.17

SPL	Part No: ST-31886-a
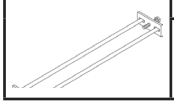	Part Name: USD Stopper Ring Removal Jig

	24mm Double end Spanner 17mm Double end Spanner

- Assemble the snap ring **(a)** into fork tube.

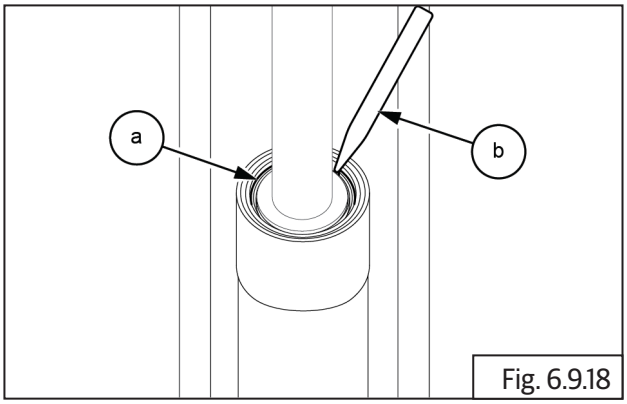

Fig. 6.9.18

SPL	Part No: ST-31887-a
	Part Name: USD Stopper Ring Remover

- Remove fork assembly **(a)** from SPG jack.

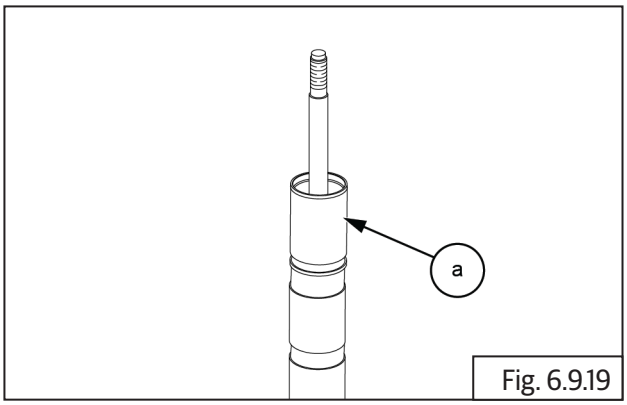

Fig. 6.9.19

- Assembly the fork nut **(a)** and fork cap nut **(b)** hand tighten just sufficiently.

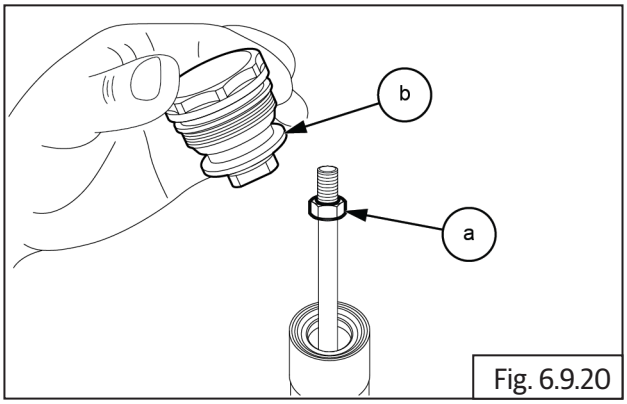

Fig. 6.9.20

- Lock the fork cap nut **(a)** and tighten fork nut **(b)**.

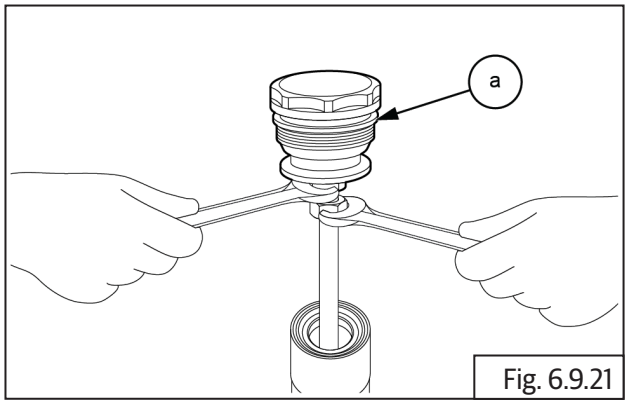

Fig. 6.9.21

	17 mm Double end spanner 14 mm Double end spanner

- Press and tighten fork cap nut **(a)** on fork assembly.

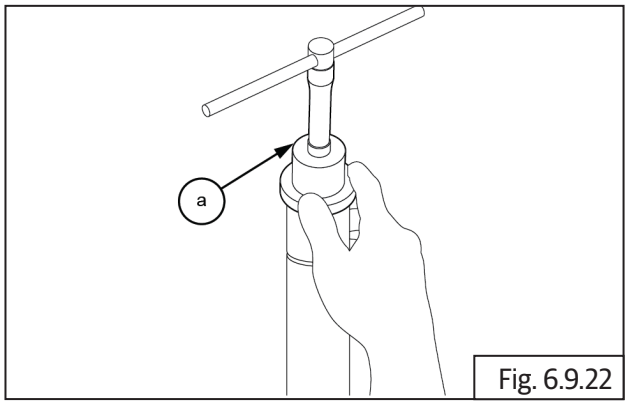

Fig. 6.9.22

SPL	Part No: ST-31884-a
	Part Name: USD Fork Nut Remover And Installer

	USD Fork Nut
Torque	20 N-m/2.0 kgf-m

12.5. Front Fork LH

NOTE
• *Apply grease to seal and bush press-fit area of outer tube and oil seal lip part.*

- Locate and install the dust seal **(a)** into slide pipe.

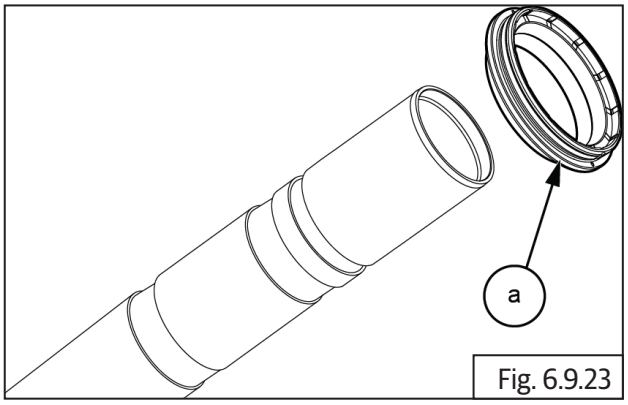

Fig. 6.9.23

- Locate and install the oil seal stopper ring **(a)** into slide pipe.

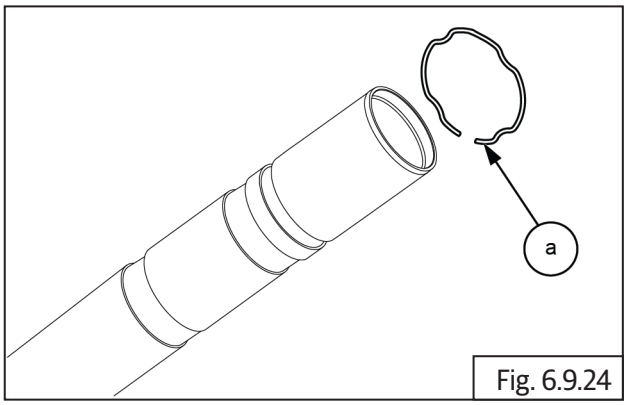

Fig. 6.9.24

NOTE
• Oil seal has a direction. Insert engraved side (surface) to axle holder side.

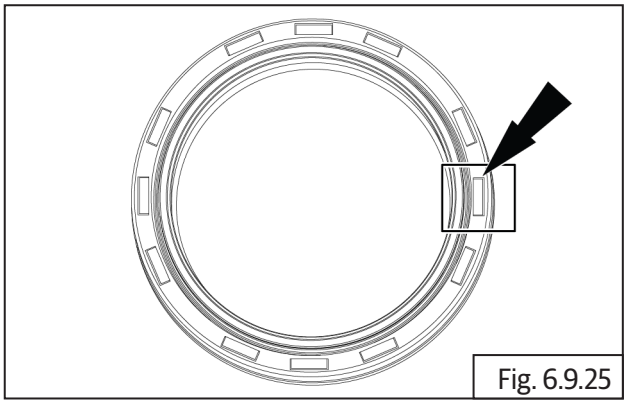
Fig. 6.9.25

- Locate and install the oil seal **(a)** into slide pipe.

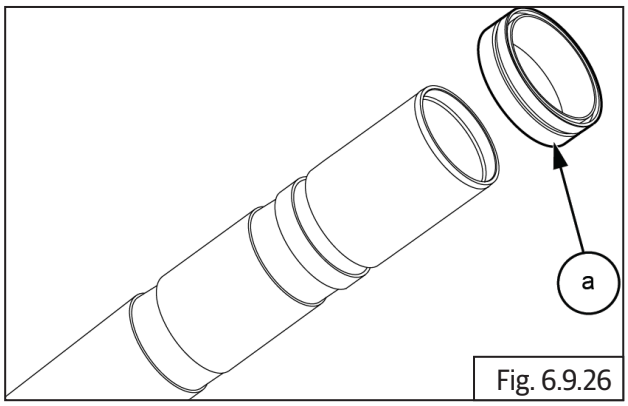

Fig. 6.9.26

- Locate and install the seal spacer **(a)** into slide pipe.

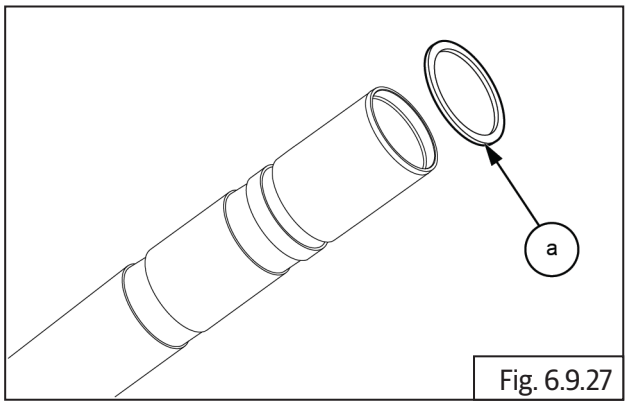

Fig. 6.9.27

- Locate and install the Guide bush **(a)** into slide pipe.

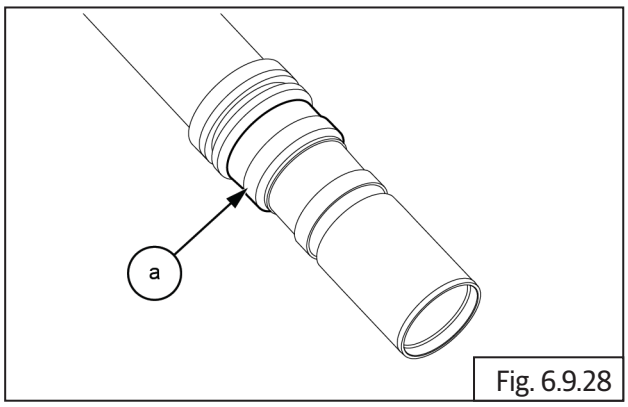

Fig. 6.9.28

- Locate and install the slide bush **(a)** into slide pipe.

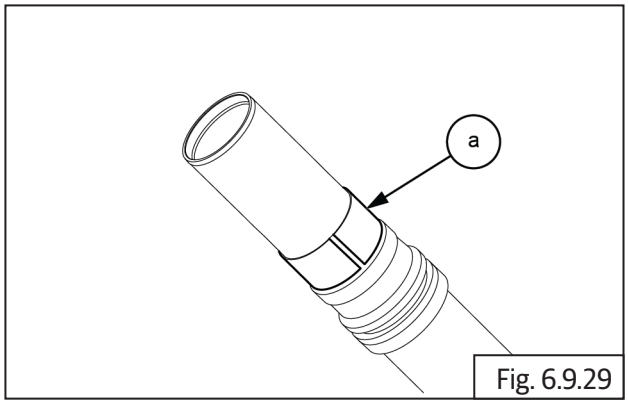

Fig. 6.9.29

- Apply grease thinly to the outer side of guide bush oil seal.

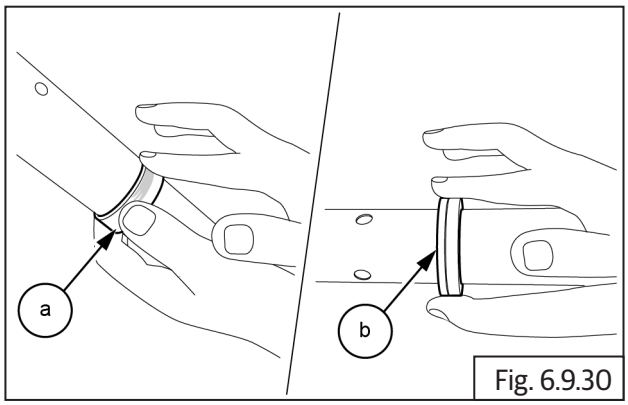

Fig. 6.9.30

- Install the slide pipe **(a)** into fork body.

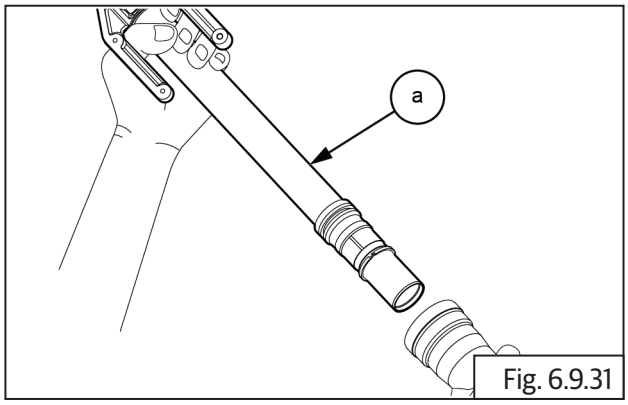

Fig. 6.9.31

- Locate and install the oil seal **(a)** into fork body using special tool.

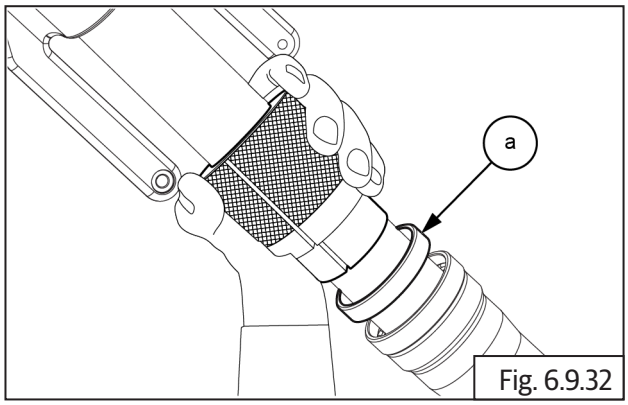

Fig. 6.9.32

SPL 	Part No: Part No:
	Part Name:

- Install the Oil seal stopper ring **(a)** into fork body.

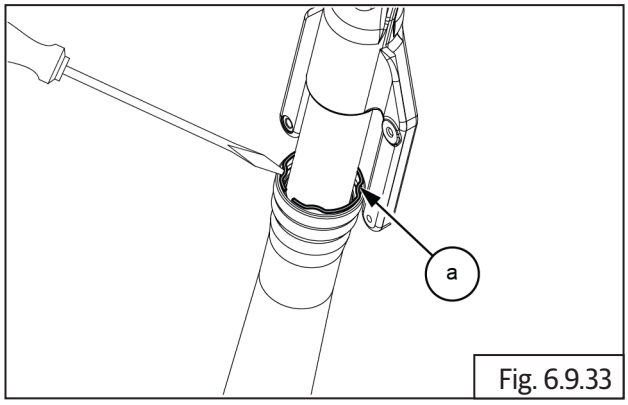

Fig. 6.9.33

	circlip plier

- Press the dust seal **(a)** into fork body using special tool.

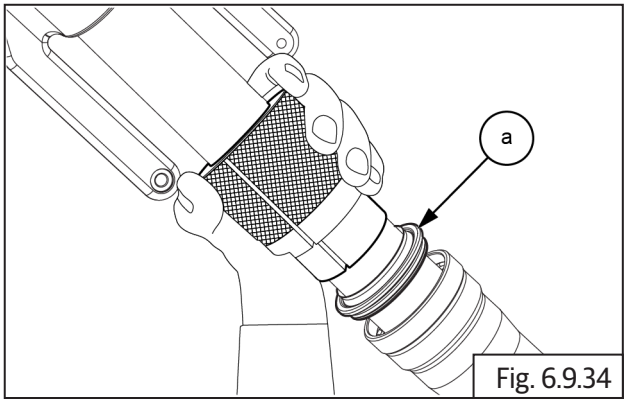

Fig. 6.9.34

SPL 	Part No: ST-31885-a
	Part Name: USD Dust Seal And Oil Seal Installer

- Install the spring **(a)** inside fork body.

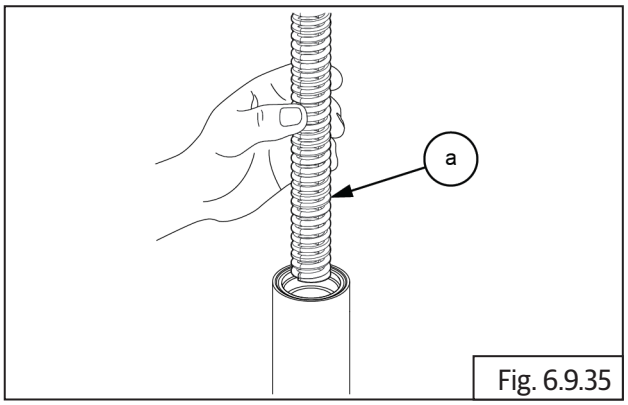

Fig. 6.9.35

- Fill up front fork with recommended oil from a
- Fill recommended fork oil into main tube.

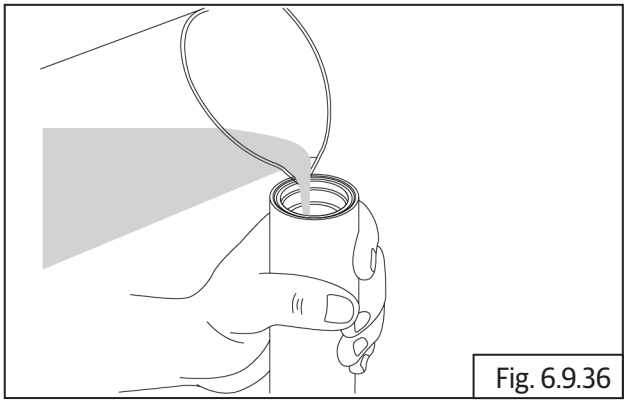
Fig. 6.9.36

Quantity:	583ml
Oil grade:	SS- 47G

- Assemble the piston rod **(a)** spring **(b)** and washer **(c)**

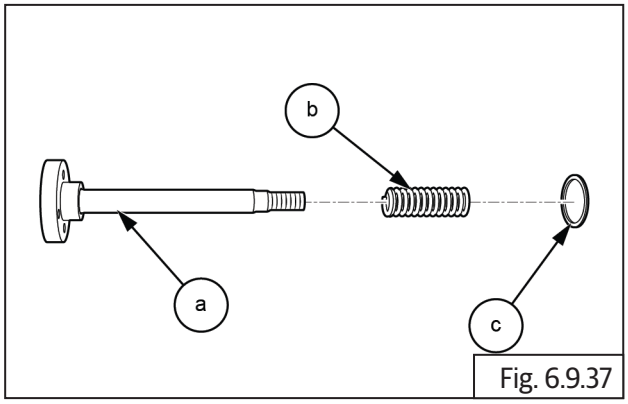

Fig. 6.9.37

- Locate the piston assembly **(a)** into fork body.

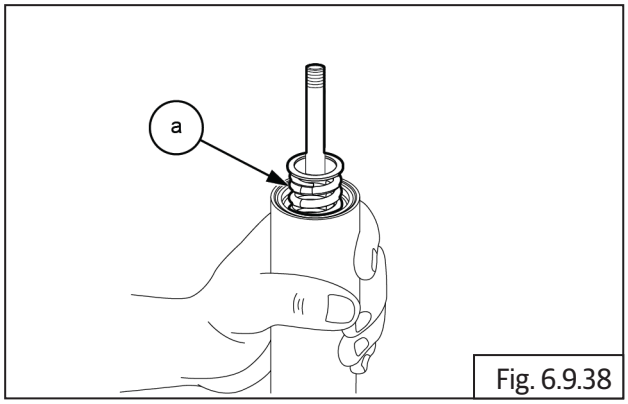

Fig. 6.9.38

- using special tool **(a)** and assembly fork into SPG jack.

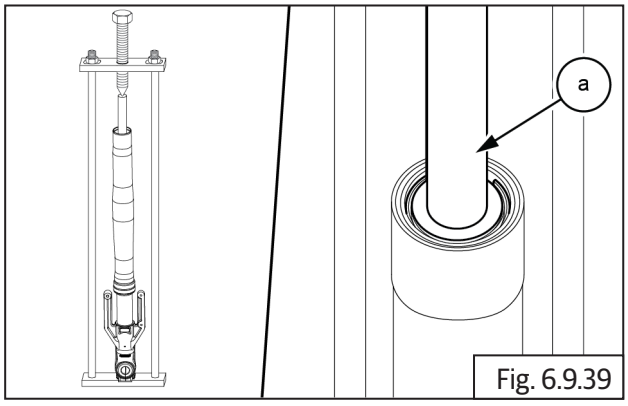

Fig. 6.9.39

SPL	Part No: ST-31886-a
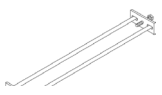	Part Name: USD Stopper Ring Removal Jig

	24mm Double end Spanner 17mm Double end Spanner

- Assemble the snap ring **(a)** into fork tube.

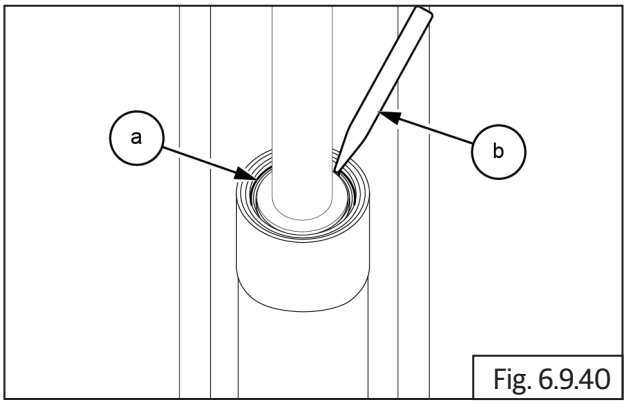

Fig. 6.9.40

SPL	Part No: ST-31887-a
	Part Name: USD Stopper Ring Remover

- Remove fork assembly **(a)** from SPG jack.

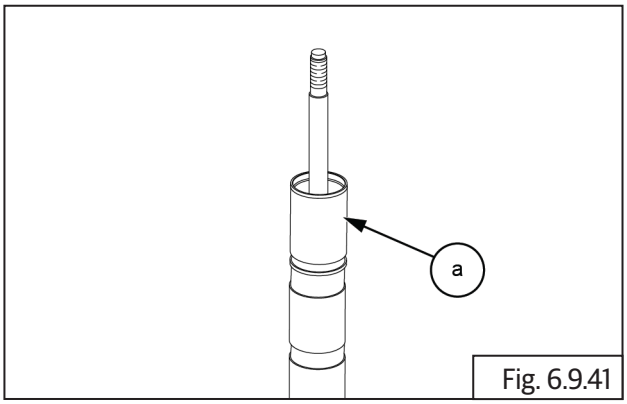

Fig. 6.9.41

- Assembly the fork nut **(a)** and fork cap nut **(b)** hand tighten just sufficiently.

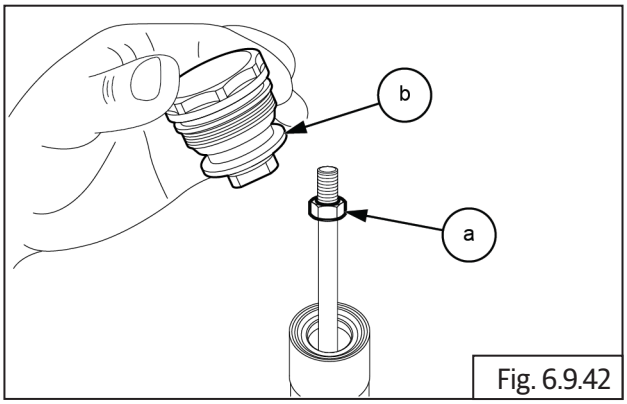

Fig. 6.9.42

- Lock the fork cap nut **(a)** and tighten fork nut **(b)**.

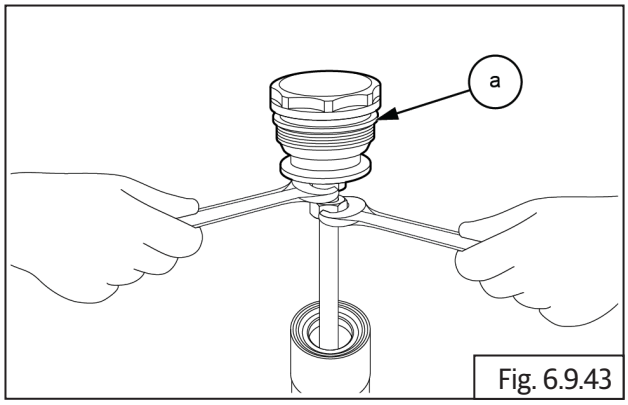

Fig. 6.9.43

	17 mm Double end spanner 14 mm Double end spanner

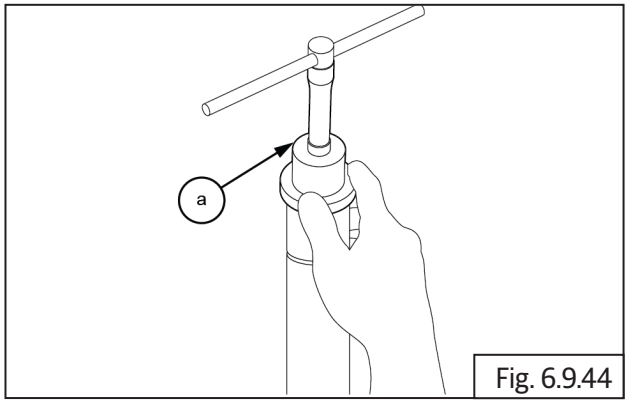

Fig. 6.9.44

SPL 	Part No: ST-31884-a
	Part Name: USD Fork Nut Remover And Installer

	USD Fork Nut
Torque	20 N-m/2.0 kgf-m

INDEX

A

ABS toner wheel

Adjuster nut

Air cut valve (ACV)

Air Filter Box Assembly

Air Filter Element

B

Balancer Shaft

Battery

Bearing

Brake lamp switch

Brake pedal

Breather Hose

C

Camshaft

Center Stand

Chain adjusters

Chain drive sprocket

Clevis pin

Clutch

Clutch Cable

Clutch Cable

Clutch Cover

Connecting Rod

Control Cables

Countershaft

Cradle Assembly LH

Cradle Assembly RH

Crankshaft

Cylinder Barrel

Cylinder Head

Cylinder Head Cover

D

Drain Hose

Drain Plug

Drive chain

Drive chain

Driveshaft

E

E-clip

Engine

Engine Oil

Engine Troubleshooting

EVAP

Exhaust Pipes and Silencers

F

FD Sprocket

Footrests

Fork Assembly

Frame Adjuster

Front Brake Disc

Front Mudguard

Front Number Plate

Front Wheel

Fuel Filter

Fuel Float

Fuel Tank

G

Gear Position Indicator Sensor

Gear Shift Linkage

Grab Handle

H

Handlebar

Handlebar brace

Handlebar riser

Headlamp

Heel guard

I

IAT sensor

Idle Speed Controller (ISC)

Ignition switch

Injector

Inlet Manifold Rubber Flange

J

Journal Bearing

L

Lever Eyelet

LH Cylinder Rocker Carrier

Limiter pad

Lower Crankcase

Lubrication

M

Magneto Cover

Magneto Rotor

Manifold Absolute Pressure (MAP) Sensor

Master cylinder assembly

Mudflap

O

Oil Cooler Inlet and Outlet Pipes

Oil Filter

Oil Jet

Oil Pan

Oil Pressure Switch

Oil Pump

P

Piston

Piston Ring

R

Rear Brake Disc

Rear Mudguard

Rear Mudguard Infill Cover

Rear Number Plate

Rear view mirror

Rear Wheel

Reed Valves

RH Cylinder Rocker Carrier

Rider Seat

S

Seat Assembly

Sensors

Shifter Drum

Shifter fork

Shifter Shaft

Shock absorber

Side Panels

Side Stand

Spark Plug

Spark Plug Suppressor Caps

Starter Motor

Steering Stem

Swing Arm

Switch module

T

Tappet Adjusters

Throttle Body

Throttle Cable

Throttle Position Sensor (TPS)

Throttle rotor housing

Timing Chain Tensioner

Toner wheel

Top Yoke - Continental GT

U

Upper Crankcase

V

Valve

W

Wheel hub

Wheel speed sensor assembly

Wheels

GLOSSARY

13.2 Glossary

Aggregates	Description
ACV	Air Cut Valve
ABS	Anti-lock braking system
B+	Battery positive
BDC	Bottom dead center
BRG	Bearing
°C	Celsius (Centigrade)
CAL	Calibration
CC	Cubic centimeters
Cm	Centimeters
CKP	Crankshaft position
DTC	Diagnostic trouble code
DOT	Department of Transportation
DMS	Dealer management system
ECM	Engine control module
ET	Engine temperature
ECU	Electronic Control Unit
EMS	Engine Management System
EFI	Electronic fuel injection
EVAP	Evaporative emissions
FI	Fuel injection
ft-lbs	Foot pounds
FD	Final Drive
gal	gallon

Aggregates	Description
GPS	Gear Position Sensor
HO2S	Heated oxygen sensor
hp	Horsepower
Hego	Heated Exhaut Gas Oxygen
HT cable	High tension cable
hr	Hour
IAC	Idle air control
IAT	Intake air temperature
IC	Instrument cluster
ID	Inside diameter
IGN	Ignition
in-lbs	Inch pounds
kg	Kilogram
km	Kilometer
km/h	Kilometers per hour
kW	Kilowatt
L	Litre
lbs	Pounds
LCD	Liquid crystal display
LH	Lefthand
MAP	Manifold absolute pressure
max	Maximum
mi	Miles

Aggregates	Description
min	Minimum
mm	Millimeter
mph	Miles per hour
Nm	Newton-meter
N/A	Not applicable
NRB	Needle Roller Bearing
O2	Oxygen
OD	Outside diameter
OEM	Original equipment manufacturer
P&A	Parts and Accessories
PAV	Pulse Air Valve
psi	Pounds per square inch
PWM signal	Pulse width modulated
qt	Quart
R	Resistence
RR	Regulator and Rectifier
RLY	Relay (Electrical)
RES	Reserve mark on fuel supply
RH	Righthand
RPM	Revolutions per minute
S	seconds
SPL	Special Tool

Aggregates	Description
SOHC	Single Over Head Cam
TB	Throttle Body
TDC	Top dead center
TWI	Tyre wear indicator
TPS	Throttle position sensor
TS	Turn signal
VAC	Volts of alternating current
VDC	Volts of direct current
VIN	Vehicle identification number
VSS	Vehicle speed sensor
W	Watt
WSS	Wheel speed sensor



Edition: V1 - DEC 2023

ROYALENFIELD.COM