ROYAL ENFIELD SERVICE MANUAL





This page is intentionally left blank

Foreword

The Royal Enfield Interceptor 650 Twin and the Continental GT 650 Twin are heritage-inspired machines built for the modern, intrepid traveller.

The Royal Enfield Interceptor 650 Twin marks the return of one of Royal Enfield's most loved classic motorcycles - the Interceptor. Harking back to a time when all that mattered was that the California sun was out and the surf was up, this motorcycle retains the charm that made it legendary.

An evolution of the Royal Enfield Continental GT 535, which, in turn, was an evolution of the Continental GT 250 - the original Royal Enfield British café racer - the Continental GT 650 Twin is every bit like its predecessor, only much better.

Designed to be simple and robust with solid and precise engineering, the Interceptor and Continental GT have been built to be your faithful companion on rides and adventures, big and small. Powered by our brand-new air-cooled 648cc twin cylinder engine and robust twin cradle chassis developed at our state-of-the-art technology centre in the United Kingdom, we hope you enjoy riding your motorcycle as much as we enjoyed building it for you.

This manual is your friend, philosopher, and guide when it comes to taking care of your motorcycle.

To know more about Royal Enfield, our products, and other news, visit www.royalenfield.com

"© Copyright 2018 Royal Enfield (a unit Eicher Motors limited). All rights reserved. No part of this service manual shall be copied, distributed or otherwise dealt without the express permission in written from the Royal Enfield who remains the sole owner of this manual."

This page is intentionally left blank

TABLE OF CONTENTS

GENERAL INFORMATION 1

TECHNICAL SPECIFICATION 2

MAINTENANCE 3

GENERAL AND SPECIAL TOOLS 4

ENGINE 5

CHASSIS 6

FUEL SYSTEM 7

EVAPORATIVE EMISSION CONTROL SYSTEM (EVAP) 8

BRAKES AND ABS 9

ENGINE MANAGEMENT SYSTEM (EMS) 10

ELECTRICAL SYSTEM 11

INDEX AND GLOSSARY 12

CONTENTS **PAGE**

1. General Information 11

1.1 About this Manual 11

1.2 How to Use this Manual 12

1.3 Important Information 13

1.4 General Precautions 13

1.5 Prior to Service 14

2. Technical Specifications 24

2.1 Engine 24

2.2 Ignition System 24

2.3 Transmission 24

2.4 Chassis 25

2.5 Electrical System 25

2.6 Dimensions 26

2.7 Weights 26

2.8 Recommended Lubricants 26

3. Periodical Maintenance Schedule (PMS) 30

4. General and Special Tools 34

4.1 General Tools 34

4.2 Measurement Tools 37

4.3 Special Tools 39

5. ENGINE 51

5.1 Components Removal from Engine 51

5.2 Components Assembly on Engine 81

5.3 Engine Removal from Main Frame 135

5.4 Engine Assembly to Frame 166

5.5 Engine Dismantling 200

5.6 Engine Inspection 237

5.7 Journal Bearings Selection Chart 250

CONTENTS **PAGE**

5.8 Engine Assembly 259

5.9 Engine Troubleshooting 321

6. CHASSIS 342

6.1 Air Filter Box Assembly 346

6.2 Control Cables 357

6.3 Handlebar 374

6.4 Exhaust Pipes and Silencers 389

6.5 Footrests/Stands/Saree Guard 403

6.6 Mudguards/Number Plates/Grab Handle 421

6.7 Side Panels and Rider Seat 433

6.8 Wheels 440

6.9 Suspension 473

6.10. Troubleshooting 509

7. Fuel System 523

7.1. Fuel System Components 526

8. Evaporative (EVAP) Emission Control System 537

8.1. Evaporative (EVAP) Emission Control System 538

9. Brakes and ABS 552

9.1. Brake - Front 552

9.2. Brake - Rear 556

9.3 Anti-lock Braking System (ABS) 577

9.4. Preparation (Front Disc Brake) 597

9.5. Reassembly 599

9.6. Preparation (Rear Disc Brake) 600

9.7. Reassembly 601

9.8. Brake Bleeding 603

CONTENTS **PAGE**

10. Engine Management System (EMS) 615

10.1 Engine Management System (EMS) 624

10.2 EMS DTC Codes 658

11. Electrical System 671

11.1 Headlamp and Cluster Dismantling 671

11.2 Tail Lamp Dismantling 676

11.3 Brake Lamp Connectors Dismantling 676

11.4 Trafficators Dismantling 677

11.5 Battery Dismantling 679

11.6 Horn Dismantling 682

11.7 Horn Assembly 684

11.8 Battery Assembly 684

11.9 Trafficators Assembly 687

11.10 Brake Lamp Connectors Assembly 689

11.11 Tail Lamp Assembly 690

11.12 Headlamp and Cluster Assembly 690

11.13. Wiring Diagram 702

12.1 Index 711

12.2 Glossary 714

GENERAL INFORMATION

CONTENTS PAGE

1.1 About this Manual 11

1.2 How to Use this Manual 12

1.3 Important Information 13

1.4 General Precautions 13

1.5 Prior to Service 14

1. General Information

1.1 About this Manual

This service manual has been created primarily for use by a technically competent and trained service personnel to

- Get familiarized and understand the construction of various aggregates of motorcycles.
- Assist in carrying out the correct and factory-approved service and overhauling procedures of the motorcycles.

While it is not possible to comprehensively capture all the service practices in this manual, it is expected that the technically competent person would have a basic knowledge and understanding of carrying out systematic service and overhauling procedures.

We strongly recommend that personnel without basic understanding of repair techniques and procedures DO NOT attempt to service or overhaul any part of the motorcycle using this manual, as it might result in wrong diagnosis and repair and ultimately render the motorcycle unsafe for use and result in expensive repair costs for the customer.

We also STRONGLY recommend that any technician who wishes to service Royal Enfield motorcycles, undergo systematic technical trainings at our Royal Enfield training academies, where the correct servicing and overhauling procedures are imparted by experienced and competent trainers, providing hands on practical sessions.

Lastly, we would recommend and insist that the periodic maintenance and overhauling of the Royal Enfield motorcycles be carried out ONLY through authorized Royal Enfield service stations where factory trained and experienced service technicians are always available.

1.2 How to Use this Manual

This service manual is divided into several chapters as detailed below. This will help the technical personnel to easily refer to the particular section of interest, for carrying out the correct maintenance and repair procedure as recommended by Royal Enfield. **Click and explore on the blue icons to refer individual chapters.**

Chapter No.	Chapters
1	General Information
2	Technical Specifications
3	Periodic Maintenance Schedule
4	General Tools and Special Tools
5	Engine
6	Chassis
7	Fuel System
8	EVAP (Evaporative Emission Control System)
9	Brakes and ABS (Anti-Lock Braking System)
10	EMS (Engine Management System)
11	Electrical System
12	Index and Glossary

There are elaborate details of CAUTIONS, WARNINGS provided in this service manual in each of the individual chapters to highlight details of information and/or precautions that need to be taken while servicing the motorcycle aggregates.

1.3 Important Information

To enhance customer satisfaction and to improve the performance of the motorcycle, Royal Enfield will carrying out modifications and changes in the motorcycles in the years to come. Such changes will be intimated periodically and continuously through service bulletins and notifications to the authorized Royal Enfield dealers and service stations and will also be included in the future editions of this service manual.

1.4 General Precautions

Important information and points that need special focus and attention while servicing the motorcycles are highlighted in this service manual as follows:

NOTE	*Indicates points of particular interest for more efficient and convenient operation.*
WARNING	**Indicates points of particular interest for more efficient and convenient operation.**
CAUTION	**Alerts the technician about potential personal injury hazards.**

⚠ WARNING

Stop the engine when servicing the fuel system. Do not smoke or allow any open flame or sparks near gasoline. Gasoline is extremely flammable and highly explosive, which could result in serious injury or fatal accidents.

Do not use after-market parts which can adversely affect the performance. Removing or altering factory-installed parts can adversely affect performance and could result in serious injury or fatal accidents.

⚠ CAUTION

Do not tamper or attempt any modifications to any part of the engine management, fuel injection, ABS brakes, exhaust and evaporative emission systems of the motorcycle as it is against the law and will render the motorcycle unfit and illegal for road use.

1.5 Prior to Service

Proper preparation is very important before commencing any maintenance or repair on a motorcycle. This will not only result in an efficient and accurate repair job but will also save time and result in "FIRST TIME RIGHT" and help the customer gain confidence in the technician's capability.

The following points are essential for carrying out maintenance or repairs on a motorcycle correctly:

1. **Understand and record customer concerns accurately.**
2. **Test-ride the motorcycle wherever required to understand the customer concerns accurately.**
3. **Refer to the past history of maintenance and repairs carried out on the motorcycle.**
4. **Water-wash and clean the motorcycle.**
5. **Maintain the work area – cleanliness, lighting, ventilation, etc.**
6. **Store appropriate general purpose and special tools for carrying out the maintenance.**
7. **Perform systematic dismantling and reassembly of the aggregates in the motorcycle.**
8. **Store required spares and consumables for the maintenance.**
9. **Perform correct inspection and diagnosis of the motorcycle.**
10. **Test-ride after repairs to ensure that motorcycle is performing correctly.**
11. **Explain the repairs and maintenance carried out to the customer.**
12. **Encourage customer to take a test-ride so as to gain confidence that the repairs have been carried out correctly and to his satisfaction.**

1.5.1. Customer Complaints

Discuss with customer to clearly understand their concerns and issues on the motorcycle. Create a job card detailing all the complaints mentioned.

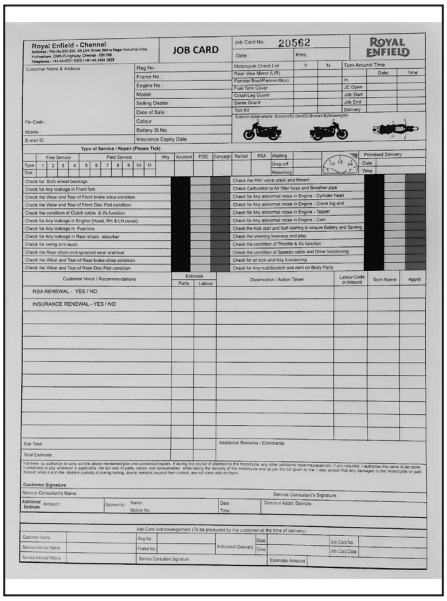

1.5.2. Test-Ride

Do a test ride wherever required to reconfirm issues mentioned by customer. This will also help to identify other issues if any.

1.5.3. Service Records

Check the service records.

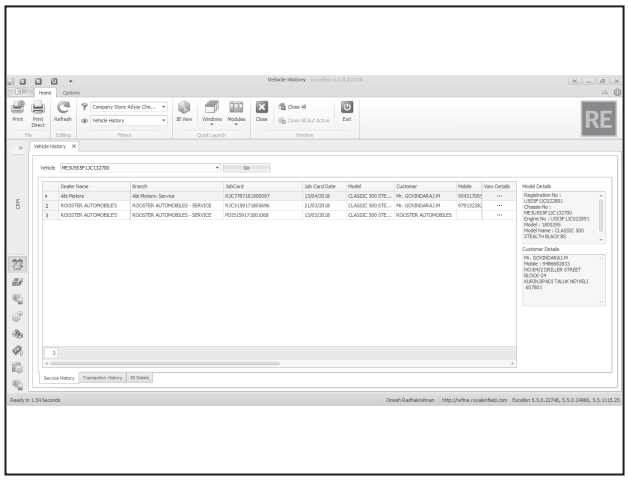

1.5.4. Clean Work Area

Ensure the work space is clean and adequately ventilated fresh air.

1.5.5. Cleaning

Cleaning before Dismantling and Inspection

Water-wash and clean the motorcycle for a thorough inspection to uncover any visual damages such as breakages, leaks, misalignments, etc., and to clearly understand the issues raised by the customer.

Clean the motorcycle thoroughly before disassembly to avoid dirt or other foreign materials entering into sealed areas as it can cause excessive wear and damage to the parts.

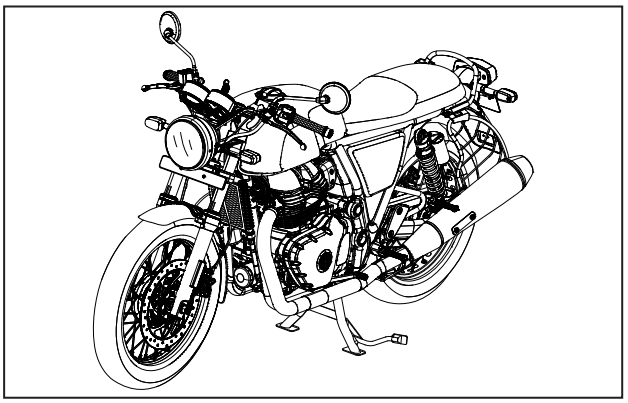

1.5.6. General and Special Tools

All general and special tools required for servicing are listed in the respective section of this service manual. Ensure that you have all the required tools for servicing. Place tools handy before beginning the service or maintenance.

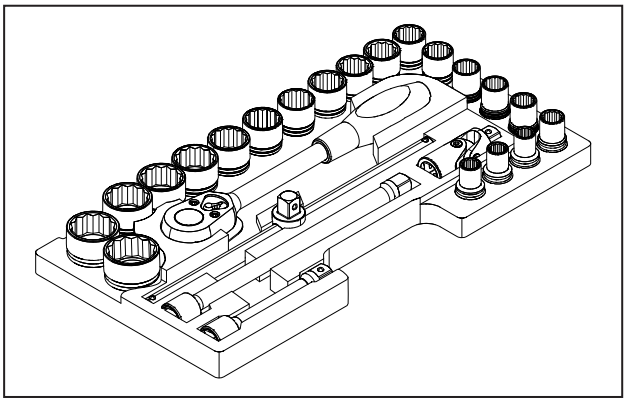

Special Tools

A list of special tools required for the dismantling and assembling of parts has been provided in each section.

Ensure that only Royal Enfield recommended special tools are used wherever mentioned. Dismantling or assembling without the use of special tools may cause severe, irreparable damage to parts.

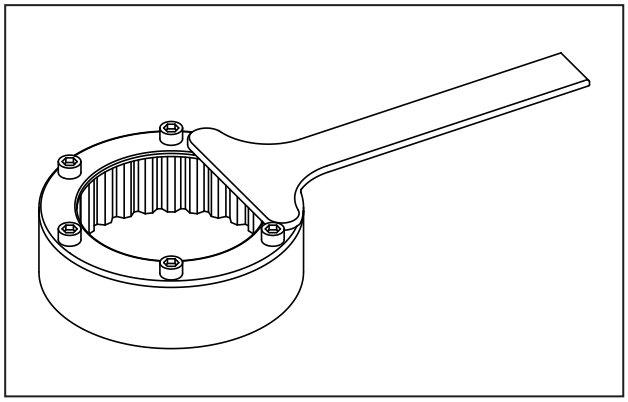

SPL	Part No: ST30266/a
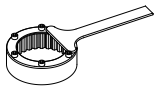	Part Name: Clutch holder

Storing Tools

After completing the job, ensure that all tools are cleaned and kept back in their designated place, so that they do not rust and can be easily found the next time.

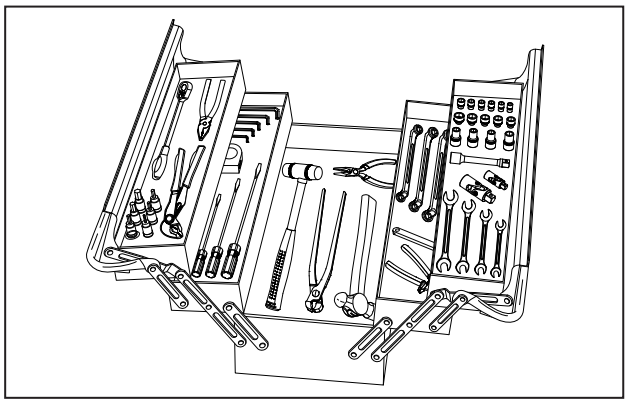

Tool Usage and Safety

Use eye protection equipment when performing any task using air-operated tools.

Pneumatic tools should be used only for removal, and not for tightening.

Ratchets and Extension

Use an extension on a ratchet's handle or power handle at suitable places.

Torque wrenches should always be used only for tightening fasteners to their recommended torque.

Once you hear the click sound, stop tightening and remove the torque wrench from the fastener. Do not tighten further as it will cause damage to torque wrench and fastener.

Hammers and Mallets

Use eye protection equipment and gloves while using a hammer.

Use a hammer or mallet that is suitable for the job.

Use only a plastic mallet to remove or assemble delicate parts like Oil seals/dowels/bushes, especially in the engine. DO NOT use a metal hammer as it will cause damage to the parts.

Screwdrivers

Use the right type and size of screwdriver at the right places.

Do not use a screwdriver for punching, chiseling or scraping, or as a lever to lift another object.

Use Ramp

Royal Enfield recommends the use of a suitable ramp to hold the motorcycle vertically in a convenient position for easy repairs.

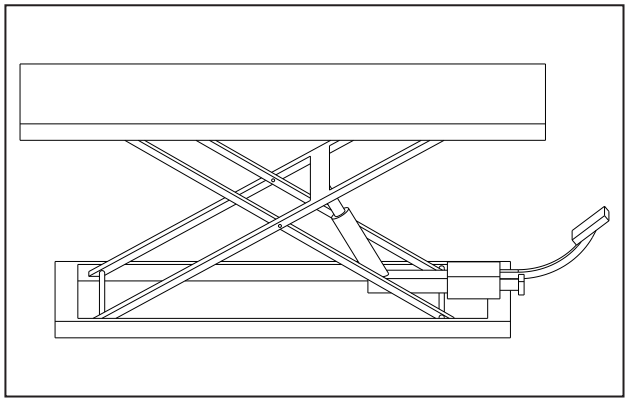

1.5.7. Prior to Disassembly

Always ensure ignition switch and stop switch are in OFF position before dismantling any aggregate on the motorcycle.

Always drain engine oil (in warm condition) whenever servicing any part of the engine/oil cooler.

Always drain fuel from the fuel tank whenever it is removed from the frame.

Always disconnect battery terminals whenever servicing the engine management system, ABS and/or any electrical wiring.

1.5.8. Disassembly/Assembly Sequence

Follow the disassembling and assembling sequence as given in the respective sections of this manual. In most cases assembly order is the reverse of disassembly. However, please follow the sequence provided in this service manual. If correct sequence is not followed, parts can be damaged.

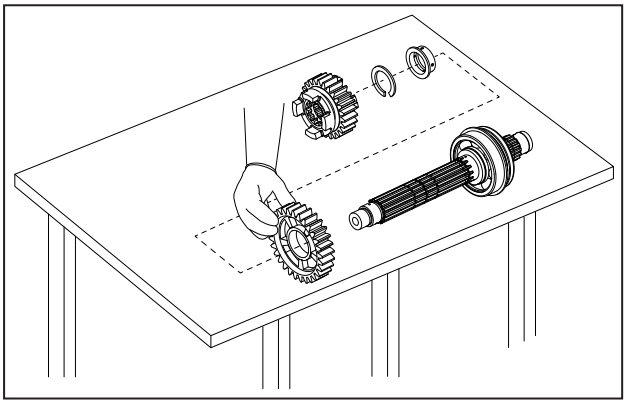

Removal of Bearings and Seals and fitting them in place

While removing bearings and seals, use correct tools mentioned in the relevant sections. Do not use excess force as it may damage parts. Similarly, while pressing bearings and seals in place lubricate them, use correct tools and visually examine if they are fitted in proper place. Bearings or seals should not be loose in the casing. Use of wrong tools, too much hammering or application of extra force may lead to damage of the bearings and seals.

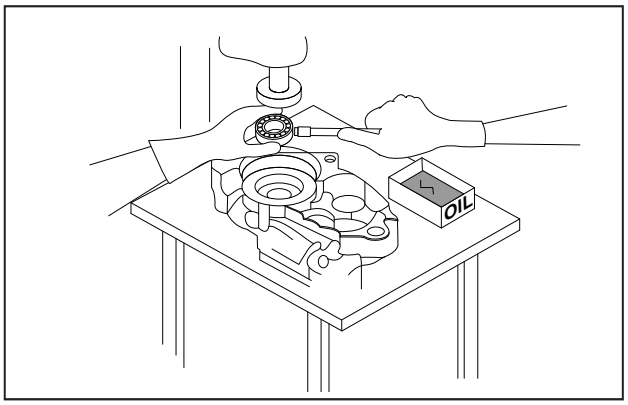

Lubrication

During assembly, ensure that all rotating and/or sliding parts are lubricated to minimize wear and tear during initial operation. Use Royal Enfield recommended oil and lubricants only. All brake system parts should be cleaned and lubricated with recommended brake fluid only (e.g., piston, MC, etc.).

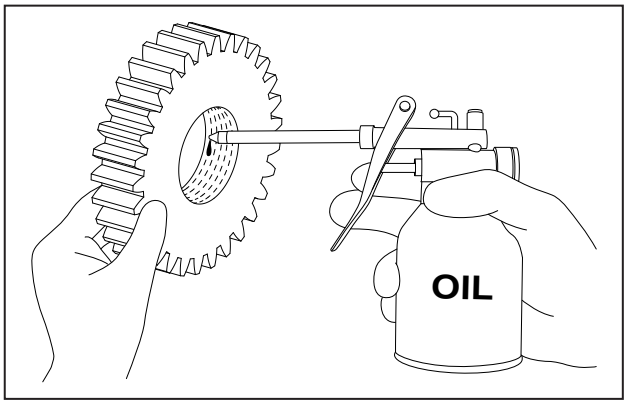

Tightening Sequence and Torque

The correct tightening sequence and torque has been provided in various sections of this service manual. Incorrect sequence or wrong torque will cause serious damage to parts.

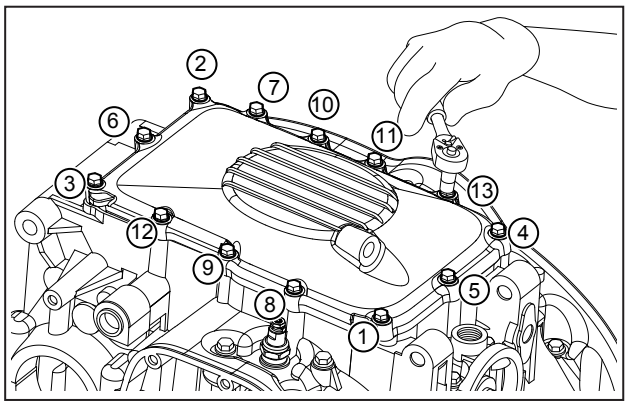

Battery Disconnection and Connection

When required, disconnect the battery cables from the battery. Disconnect the ground negative (−) terminal first and then positive (+) terminal to avoid short circuit. While connecting, first connect the positive (+) and then the negative (−) terminals.

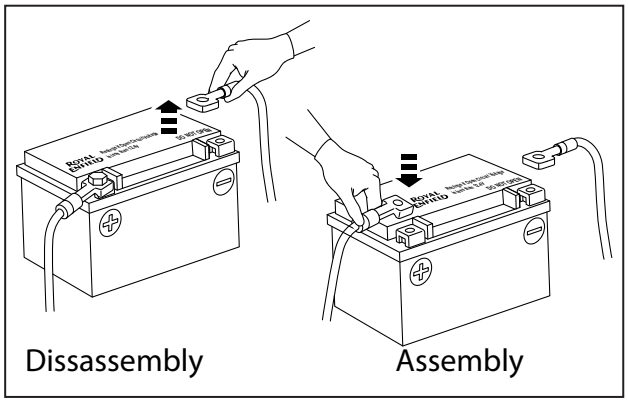

Electrical Connectors

Ensure that lock is released in the connectors before disconnecting or connecting electrical connectors. Excessive force to pull out connectors without releasing the lock may damage the connector.

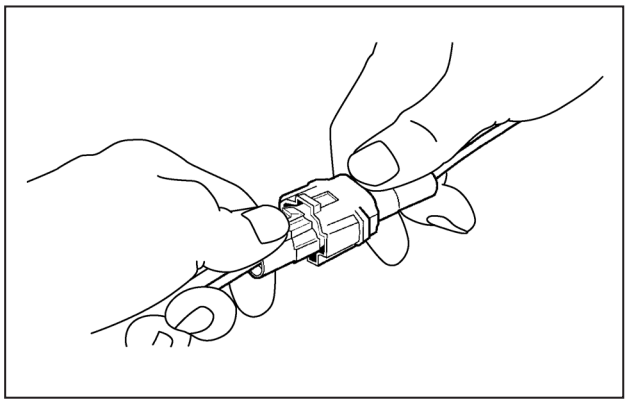

1.5.9. Safety

Ignition System

Ignition system produces high voltage. When working on any ignition system with the engine running, always keep your hands away from the spark plug wires.

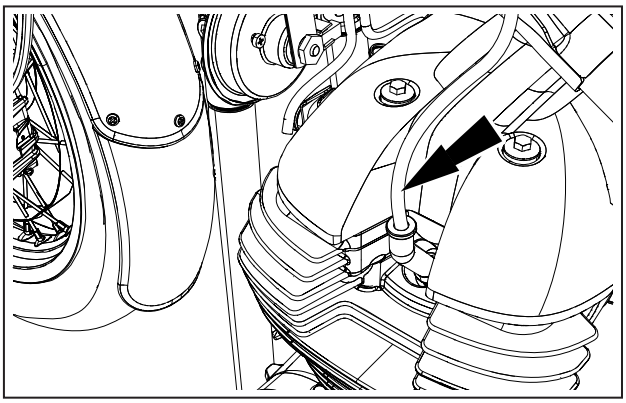

Handling Sharp-edged Parts

Wear hand gloves to prevent injury from possible sharp edges on the parts.

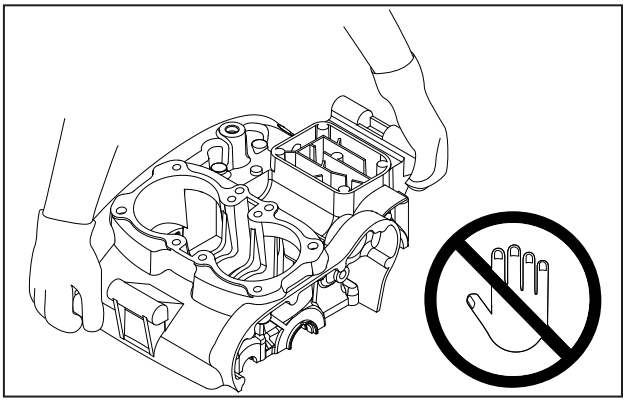

Handling Fragile Parts

Be careful while handling fragile parts like headlamp, indicator, bulb, etc. Use proper tools and do not apply undue force. After removing, store the parts in a safe place.

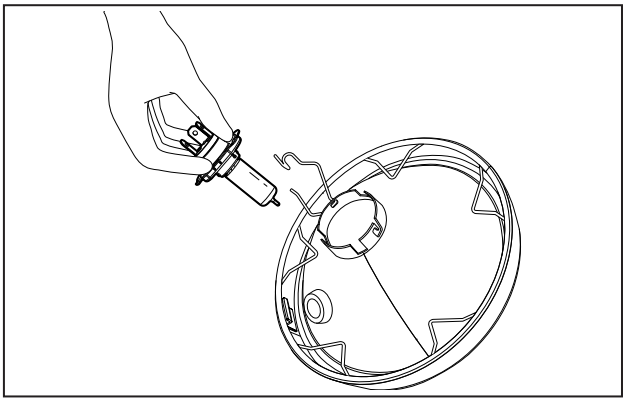

Welding

Royal Enfield does not recommend welding on the frame or any other parts of the motorcycle. Welding will make the frame weak and can also affect the balance of the motorcycle.

In motorcycles equipped with electronic control modules like EMS and ABS, welding will cause irreparable damage to the EMS/ABS system.

This will also void motorcycle warranty.

Tampering

It is illegal to tamper with the following:

a) Exhaust system
b) Fuel systems
c) Engine Number and/or VIN Information Plate
d) Wiring harness
e) Frame

This will lead to NON CONFORMANCE to the noise and emission regulations in force, causing serious performance issues besides irreparable damage to the motorcycle.

This will also void warranty of the motorcycle.

1.5.10. Storage of Removed Parts

After disassembly of all parts including sub-assemblies, clean and store them in a separate storage bin to prevent from dust and place the parts near the working area.

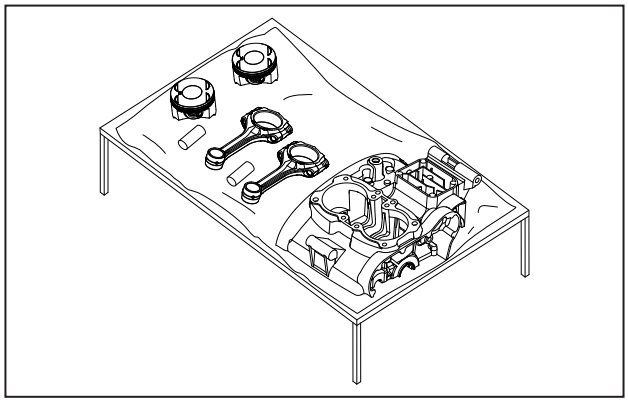

Protective Covers

Use proper covers on the motorcycle to avoid scratching/damaging paint during service.

1.5.11. Inspection

Reuse of worn or damaged parts may lead to serious malfunction and/or unsafe operation of the motorcycle. All removed parts should be cleaned and visually inspected for wear-out, corrosion, discoloration, damage, etc. Refer to the appropriate sections of this manual for service limits on individual parts. If any wear or tear has been found or if the part is beyond its service limit, replace the parts with Royal Enfield Genuine parts.

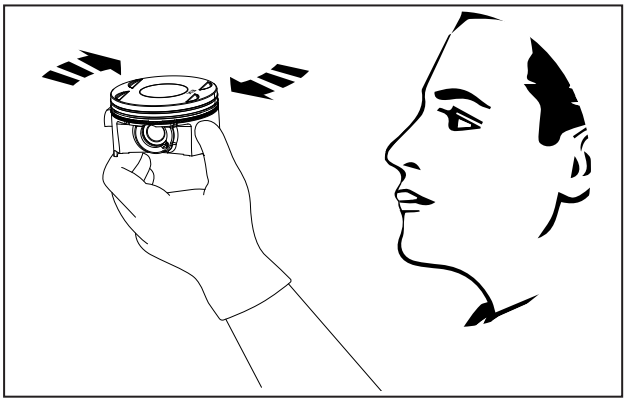

1.5.12. General

One-time Parts/Consumables

In the service manual, we have listed parts that are for one-time use only. Replace and do not reuse parts such as:

a) Oil seals
b) Filters
c) Gaskets
d) Rubber washers
e) Cylinder head bolts
f) Connecting rod bolts
g) Crankcase bolts

Spares/Lubricants/Consumables

Ensure that you have all the spares/lubricants/consumables required for the servicing of a particular section stored near you for easy access. Use only Royal Enfield Genuine parts.

ROYAL ENFIELD

Genuine Parts

Rust or Corrosion Removal

In case a rusted or corroded part cannot be removed, apply recommended/reputed rust removal agents, wait for the removal agent to free up the rust/corrosion and then remove the part. Clean and inspect the part carefully to confirm it can be reused.

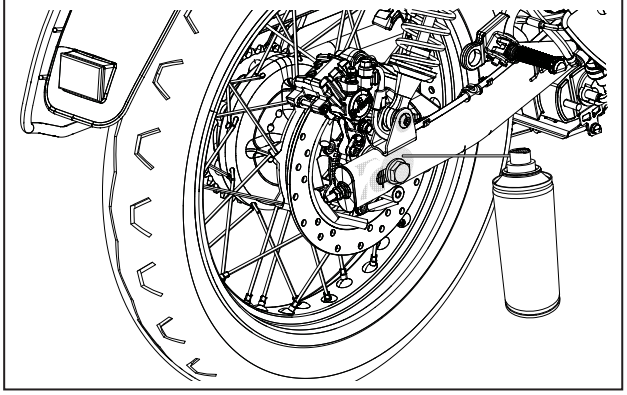

Solvents/Oils for Cleaning

Use correct solvents for cleaning to reduce fire hazards.

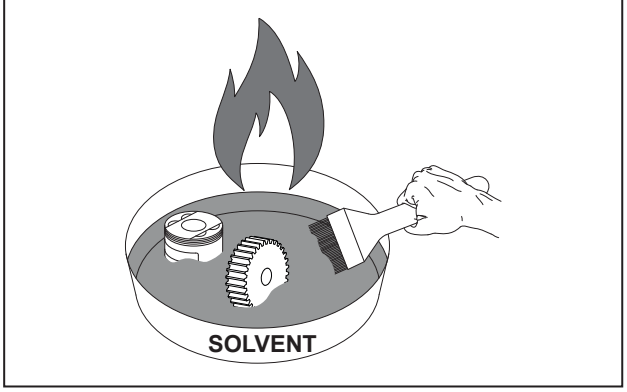

Hazardous Substances

Many liquids and other substances like fuel, lubricants, brake oil, adhesives, etc., used in automobiles are poisonous. Keep the fluids out of reach of children. Do not bring in contact with eyes and skin. Wash exposed skin thoroughly with soap and water. If any irritation persists, consult a doctor immediately.

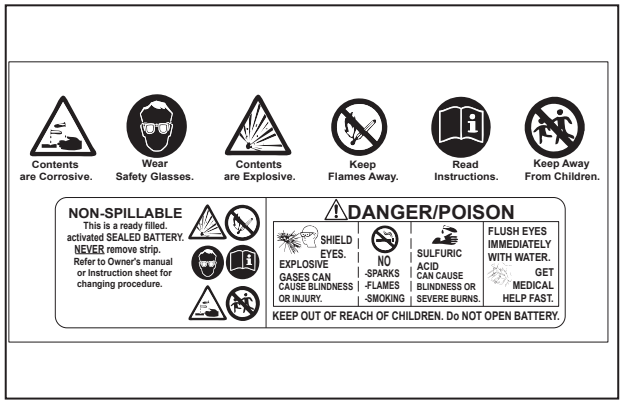

Environmental Protection

Dispose used oil and other consumables like gaskets, O-rings, oil filters through authorized waste-disposal agencies.

Do not spill brake oil on painted parts. It will damage the paint.

Do not use mineral-based grease in brake parts as it will damage the hydraulic seals.

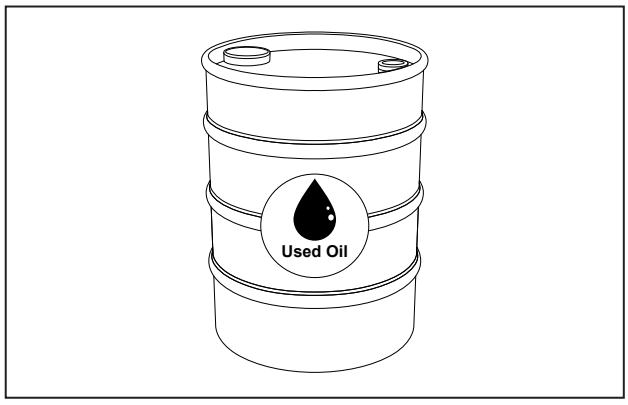

Battery Acid

Avoid spilling battery acid on any part of the motorcycle or your body. Wash spillage immediately with water to avoid acid marks on the motorcycle or burns/injury to yourself.

Gasoline/Petrol

Gasoline/Petrol is highly flammable. Be careful while removing the fuel tank and handling Gasoline/Petrol. Store it in a safe place and ensure it is stored in a well ventilated area, away from the work area and fire.

After-market Parts and Accessories

Royal Enfield strongly recommends use of Royal Enfield genuine parts and accessories only.

A list of all accessories available from Royal Enfield can be obtained from Royal Enfield dealers.

Yet, if you are using any after-market part that is not supplied by Royal Enfield, do ensure that it does not interfere with the functioning of any of the motorcycle parts.

Gasket and O-ring

If the gaskets and O-rings are hardened, shrunk or damaged after disassembly, their sealing performance will be reduced.

Remove used gaskets and O-rings. Clean the sealing surfaces thoroughly. Make sure no gasket or other material waste remains on the surface.

Always replace recommended gaskets and O-rings with Royal Enfield genuine parts once they are removed.

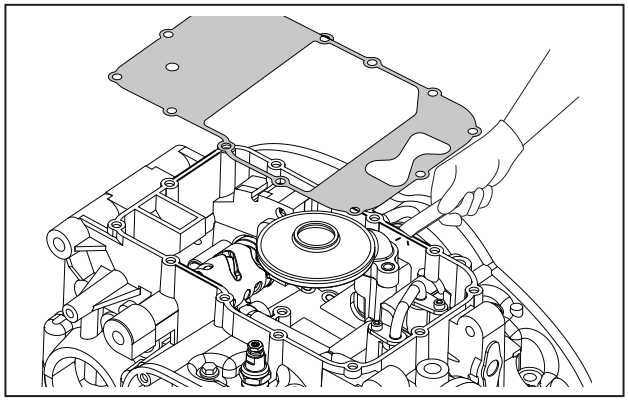

1.5.13. Final Inspection

Once the repairs/servicing is done, check and confirm that all tasks mentioned on the job card have been performed. Do a proper testing to ensure that all critical functions are working properly, all reported issues have been resolved and no new problem has been introduced.

Follow the final inspection checklist and sign out through the final inspector.

1.5.14. Delivery to the Customer

Ensure that the customer is informed about all the repairs that have been carried out. Also let he/she know about the parts that have been replaced and consumed during the repairs. Demonstrate to the customer that all his/her reported issues have been resolved. Insist on a test ride if required.

Please preserve the parts. Show it to the customer and dispose it with the customer's permission.

TECHNICAL SPECIFICATIONS

CONTENTS PAGE

2. Technical Specifications 24

2.1 Engine 24

2.2 Ignition System 24

2.3 Transmission 24

2.4 Chassis 25

2.5 Electrical System 25

2.6 Dimensions 26

2.7 Weights 26

2.8 Recommended Lubricants 26

2. Technical Specifications

2.1 Engine	
Engine Type	**Parallel Twin Cylinder, 4 Stroke, SOHC**
Bore	**78 mm**
Stroke	**67.8 mm**
Swept Volume	**648cc**
Compression Ratio	**9.5:1**
Max Power	**34.9 kw @ 7250 RPM**
Max Torque	**52.3 N m @ 5150 RPM**
Idle RPM	**1200 ± 80 RPM**
Starting	**E-Start**
Air Filter Element	**Paper element**
Lubrication	**Forced lubrication, Wet sump with pump driver oil delivery**
Gear Box	**6 Speed Constant Mesh**
Engine Oil Tank Capacity	**Dry Fill:3.9 Liters / 1.03 Imperial gallon**
	Refill: 3.1 Liters / 0.82 Imperial gallon
Engine oil grade	**TOTAL ELF MOTO 4 TECH SAE 10W50 APISL, JASO MA2, SYNTHETIC**
Fuel Supply	**Fuel Injection**
Cooling	**Air cooling**

2.2 Ignition System	
Ignition	**Digital Spark ignition**
Ignition Advanced	**11.25˚ BTDC**
Spark Plug	**BOSCH UR5CC**
Spark Plug Gap	**0.7 mm to 0.8 mm**

2.3 Transmission	
Clutch	**Wet multiplate**
Primary Drive	**Gear**
Primary Ratio	**2.051:1**
Gear Box	**6 Speed Constant Mesh**
Gear Ratio	**2.615 :1** **1.813 :1** **1.429:1** **1.190 :1** **1.040:1** **0.962:1**
Secondary Drive	**Sprockets and Closed Chain (5/8" Pitch)**
Secondary Ratio	**2.533:1**

2.4 Chassis

Frame	**Steel Tubular, Double Cradle Frame**		
Suspension	**Front**	**41 mm Front Fork, 110 mm Travel**	
	Rear	**Single Coil-over Shocks, 88 mm Travel**	
Hydraulic Disc Brakes	**Front and Rear with ABS System**		
	Front	**320 mm disc, ABS**	
	Rear	**240 mm disc, ABS**	
	ABS	**BOSCH 9.1**	
Brake Fluid	**Grade**	**DOT 4**	
	Capacity	**Front: 50 ml**	**Rear: 100 ml**
Tyre size	**Front**	**100/90-18, M/C 56H Pirelli Phantom Sports Comp**	
	Rear	**130/70-18, M/C 63H Pirelli Phantom Sports Comp**	
Tyre Pressure		**Solo**	**With Pillion**
	Front	**32 psi/2.20 kg/cm²**	**32 psi/2.20 kg/cm²**
	Rear	**36 psi/2.53 kg/cm²**	**39 psi/2.74 kg/cm²**
Steering Lock	**Combination Lock**		
Fuel	**Unleaded Gasoline**		
Induction	**Fuel Injected**		
Fuel tank capacity	**Continental GT 650 Twin**	**12.5* Liters/2.74* Imperial Gallons**	
	Interceptor 650 Twin	**13.7* Liters/3* Imperial Gallons**	
Low Fuel Warning	**Continental GT 650 Twin**	**3.1* Liters/0.68* Imperial Gallons**	
	Interceptor 650 Twin	**2.9* Liters/0.63* Imperial Gallons**	
Dead Stock	**Continental GT 650 Twin**	**1.5* Liters /0.33* Imperial Gallons**	
	Interceptor 650 Twin	**0.75* Liters/0.16* Imperial Gallons**	
The above values are approximate and the actual fuel filling capacity will vary from the values mentioned.			

2.5 Electrical System

System	**12V - DC**
Generation	**Alternator**
Alternator Output	**156 Watts @ 1100 RPM**
Battery	**12V, 12 Ah VRLA**
Headlamp	**12V, H4 60/55W**
Brake/Tail Lamp	**12V, P21/5W (Halogen)**
Turn Signal	**12V, R10W**
Instrument Cluster	**Digital instrument cluster with LCD**
Horn	**320 Hz Low and 420 Hz High Tone**
Starter Motor	**12V, 0.8 kW**

⚠ WARNING

Using bulbs/other electrical gadgets other than specified rating may lead to over loading/erratic behavior/premature failure of electrical system. Modifications on the motorcycle which are not approved by Royal Enfield may not only disqualify for warranty, but will also affects the performance of the motorcycle.

2.6 Dimensions

Rake	**24˚(degrees)**	
Front Wheel Rim	**18 M/C x MT 2.50**	
Rear Wheel Rim	**18 M/C x MT 3.50**	
Length	**2119 mm**	
Width	**Continental GT 650**	**833 mm (with mirrors)**
	Interceptor INT 650	**857 mm (with mirrors)**
Height	**Continental GT 650**	**1067 mm**
	Interceptor 650	**1120 mm**
Wheel base	**1398 mm**	
Ground Clearance	**174 mm**	

2.7 Weights

Kerb weight (90% fuel & Oil)	**Continental GT 650**	**208 Kg (Euro IV) / 211 Kg (BS IV)**
	Interceptor INT 650	**213 Kg**
Max. pay load (Inclusive of rider mass)	**Continental GT 650**	**200kg (Euro IV) / 197 KG (BS IV)**
	Interceptor INT 650	

- Values/Dimensions given above are for your guidance only.
- In view of continuous improvements being done on our products, the specifications could change without prior notice.

2.8 Recommended Lubricants

Engine Oil	Grade	**SAE 10W - 50**	
	Capacity	**1st Dry fill**	**3.9 Liters/0.86 Imperial Gallons/1.03 US Gallons**
		Routine Oil Change	**3.1 Liters/0.68 Imperial Gallons/0.82 US Gallons**
Front Fork Oil	Grade	**Royal Enfield Front Fork Oil (or Gabriel Fork Oil 2W 25 HPCL)**	
	Capacity	**473 ml/fork**	
Brake Fluid	Grade	**DOT 4**	
	Capacity	**Front 50 ml Rear 100 ml**	

⚠ CAUTION

Use of wrong grade oil will reduce the life of the moving parts and seriously affect performance.

NOTE

- *DO NOT Mix DOT 4 or other brake fluids together.*
- *Recommendation is subject to change without notice.*

Engine Oil Lubrication Flow

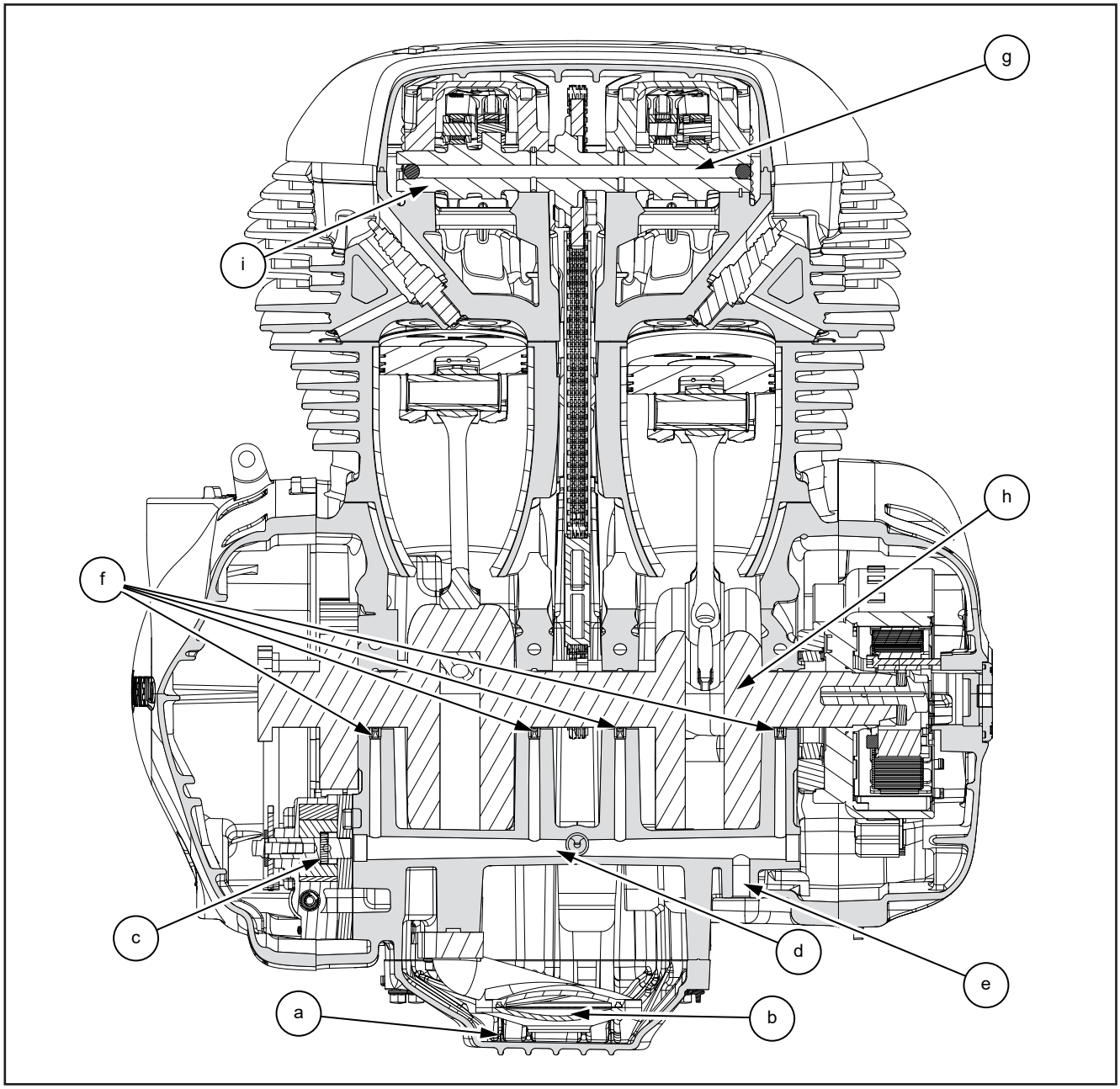

Item No.	Description	Quantity
a	Oil Sump	1
b	Oil Strainer	1
c	Oil Pump	1
d	Crank Shaft Oil Passage	-
e	Oil Pressure Switch Passage	1
f	Oil Jets (Crankcase Lower)	4
g	Camshaft Oil Passage	1
h	Crankshaft	1
i	Camshaft	1

Engine Oil Lubrication Flow

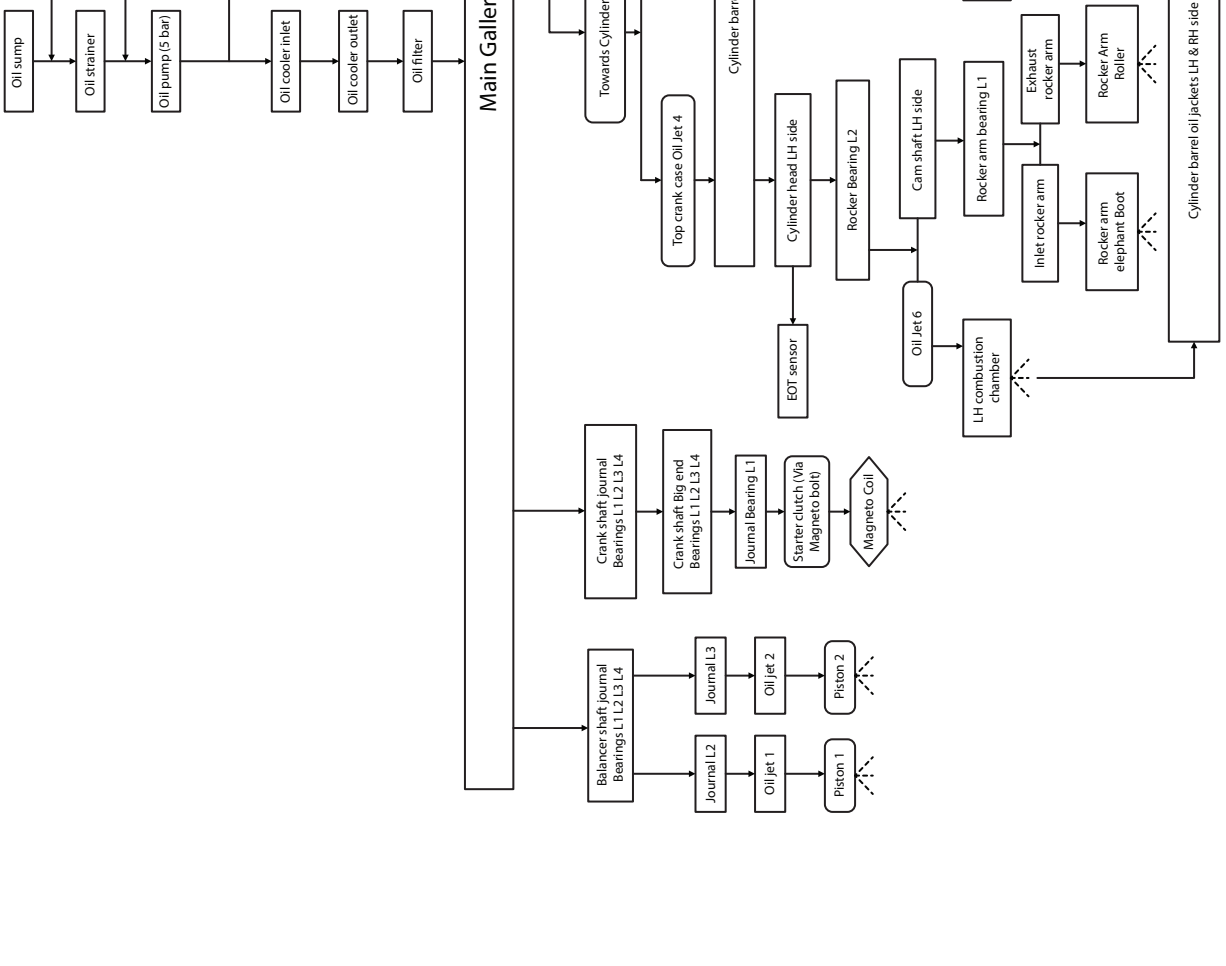

PERIODIC MAINTENANCE SCHEDULE (PMS)

3. Periodical Maintenance Schedule (PMS)

The maintenance schedule detailed here will help you maintain your Continental GT / Interceptor motorcycle meticulously and to get a long trouble free service. The schedule provided herein is based upon average Twin 650CC riding conditions and indicates at which regular inspections, adjustments, replacements and lubrications frequency are to be carried out. The frequency of the maintenance must be shortened depending upon the severity of the driving condition or if the motorcycle is used in a very dusty environment. Contact the nearest Royal Enfield Authorized Dealer/Service Center for expert advice and to carry out the required maintenance.

Sl. No.	Description	Periodic Maintenance										
	km (x 1000)	**0.5**	**5**	**10**	**15**	**20**	**25**	**30**	**35**	**40**	**45**	**50**
	Miles (x 1000)	**0.3**	**3**	**6**	**9**	**12**	**15**	**18**	**21**	**24**	**27**	**30**
	Months (Euro IV)	**1.5**	**6**	**12**	**18**	**24**	**30**	**36**	**42**	**48**	**54**	**60**
	Months (BS IV)	**1.5**	**6**	**6**	**12**	**12**	**18**	**18**	**24**	**24**	**30**	**30**
1	Engine oil (#)	R		R		R		R		R		R
		Check level at every 1000 kms or earlier and top up as required										
2	Engine oil filter element (#)	R		R		R		R		R		R
3	Inlet and Exhaust valve clearance(**)	I		I		I		I		I		I
4	Spark plug	I	I	I	I	R	I	I	I	R	I	I
5	HT lead for crack	I	I	I	I	I	I	I	I	I	I	I
6	Rubber hose, Air filter to throttle body	I	I	I	I	I	I	I	I	I	I	I
7	Rubber hose, Inlet manifold/ Adapter	I	I	I	I	I	I	I	I	I	I	I
8	Evaporative Emission Equipment rubber hoses	I	I	I	I	I	I	I	I	I	I	I
9	Fuel filter - External					R				R		
10	Air filter element	C	C	R	C	R	C	R	C	R	C	R
		Clean/replace more frequently if operated in dusty condition										
11	Vent Pipe under air filter box	I	I	I	I	I	I	I	I	I	I	I
12	Hose - Secondary Air	I	I	I	I	I	I	I	I	I	I	I
13	Accelerator and Throttle pulley cables free play	A	A	A	A	A	A	A	A	A	A	A
14	Clutch Cable / lever free play	Adjust every 1000 kms or earlier as required										

I - Inspect (Clean, Adjust, lubricate or replace if necessary) L - Lubricate R - Replace C - Clean

(#) - After First service, Engine oil and Engine oil filter replacement is a mandatory at every 12 months even the vehicle has not covered the specified kms.

(**)- After First service, Valve clearnace adjustment is a mandatory at every 12 months even the vehicle has not covered the specified kms.

Sl. No.	Description	Periodic Maintenance										
	km (x 1000)	**0.5**	**5**	**10**	**15**	**20**	**25**	**30**	**35**	**40**	**45**	**50**
	Miles (x 1000)	**0.3**	**3**	**6**	**9**	**12**	**15**	**18**	**21**	**24**	**27**	**30**
	Months (Euro IV)	**1.5**	**6**	**12**	**18**	**24**	**30**	**36**	**42**	**48**	**54**	**60**
	Months (BS IV)	**1.5**	**6**	**6**	**12**	**12**	**18**	**18**	**24**	**24**	**30**	**30**
15	Hand levers pivot point	Lubricate every 1000 kms or earlier as required										
16	Brake pads - Front and Rear	I	I	I	I	I	I	I	I	I	I	I
17	Disc Brake fluid level - Front and Rear	I	I	I	I	R	I	I	I	R	I	I
18	Rear brake pedal and Gear change pedal pivot	L	L	L	L	L	L	L	L	L	L	L
19	Brake hose and Banjo Bolt - Front and Rear	I	I	I	I	I	I	I	I	I	I	I
20	Front Fork oil / leak	I	I	I	I	I	I	I	I	I	I	I
		Replace oil at every 60000 kms or any work carried out whichever is earlier										
21	Steering tapper roller bearing Play	I	I	I	I	I	I	I	I	I	I	I
22	Rear Wheel Drive Chain	Lubricate and Adjust every 1000 kms / Clean, Lubricate and Adjust every service or earlier as required										
23	Rear Wheel Cush rubbers				I				I			
24	Spokes tightness / Wheel rim run out Rront and Rear	I	I	I	I	I	I	I	I	I	I	I
25	Battery terminals (apply petroleum jelly)	C	C	C	C	C	C	C	C	C	C	C
26	Battery electrolyte levels (Not applicable for sealed battery)	I	I	I	I	I	I	I	I	I	I	I
27	Earth wire eyelet tightness			I		I		I		I		I
28	Tyre wear pattern Front and Rear	I	I	I	I	I	I	I	I	I	I	I
29	Pivot - Side Stand, Center Stand	L	L	L	L	L	L	L	L	L	L	L
30	Rider and Pillion Foot rest pivot	L	L	L	L	L	L	L	L	L	L	L
31	All mounting fasteners in vehicle for tightness	I	I	I	I	I	I	I	I	I	I	I

I - Inspect (Clean, Adjust, lubricate or replace if necessary) L - Lubricate R - Replace C - Clean

(#) - After First service, Engine oil and Engine oil filter replacement is a mandatory at every 12 months even the vehicle has not covered the specified kms.

(**)- After First service, Valve clearnace adjustment is a mandatory at every 12 months even the vehicle has not covered the specified kms.

NOTE

- *For Maintenance after 50,000 kms, Please repeat the same frequency specified above, in consultation with a Royal Enfield Authorized Dealer/Service Center.*

GENERAL AND SPECIAL TOOLS

CONTENTS PAGE

4. General and Special Tools 34

4.1 General Tools 34

4.2 Measurement Tools 37

4.3 Special Tools 39

4.3.1. Engine 39

4.3.2. Vehicle 41

4. General and Special Tools

4.1 General Tools

Sl. No.	Size	Part Description	Illustration
1	100 - 225mm	Screw Driver	
2	100 - 225mm	Screw Driver Phillips	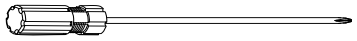
3	T20	Screw Driver (Torx)	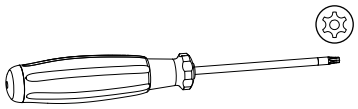
4	-	Chisel Flat	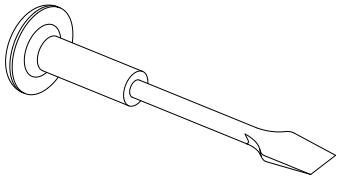
5	-	Chisel Pointed	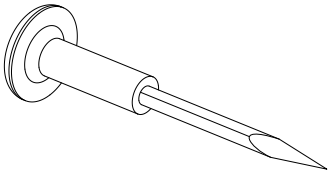
6	6-7 to 26-27mm	Spanner (Double End/Open End)	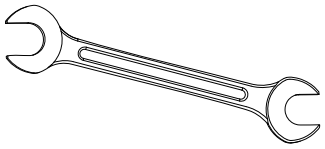
7	8-9 to 24-25mm	Spanner (Ring)	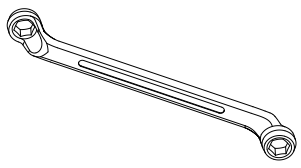
8	-	Hammer	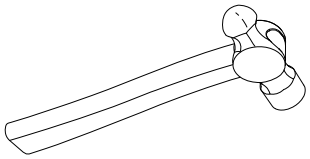

Sl. No.	Size	Part Description	Illustration
9	-	Plastic Hammer	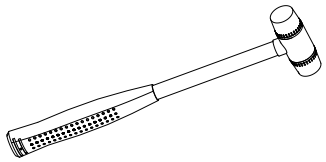
10	-	Mallet	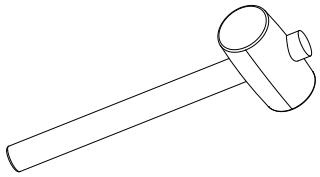
11	-	Tommy Bar	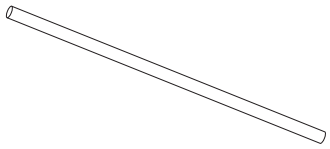
12	-	Spring Puller	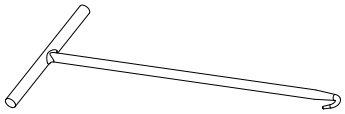
13	4 - 14mm	Allen Key	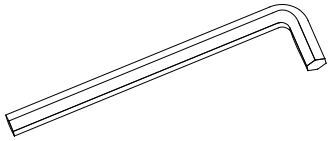
14	4 - 14mm	Allen Socket	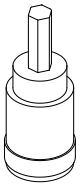
15	8 to 30mm	Hex Socket	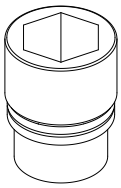
16	12mm	Bi-hexagonal	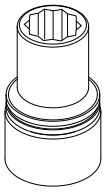
17	5" & 10"	Extension	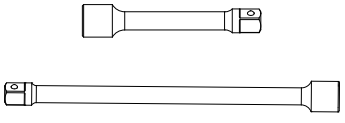

Sl. No.	Size	Part Description	Illustration
1	-	Ratchet	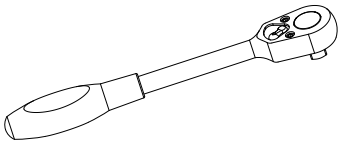
2	-	T-handle	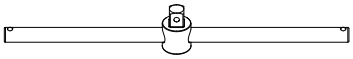
3	10 - 50N-m & 22 - 100N-m	Torque Wrench	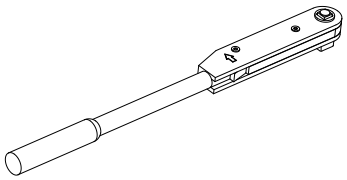
4	-	Cutting Plier	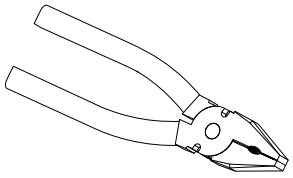
5	-	Nose Plier	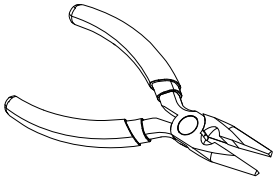
6	-	Circlip Plier	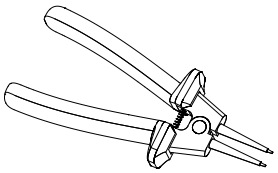
7	-	Adjustable Plier	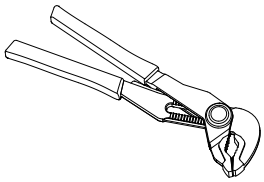
8	-	Pinch Plier	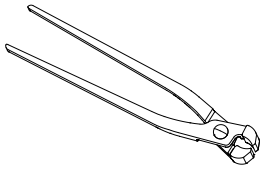
9	-	Spoke Adjuster	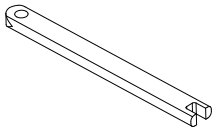

Sl. No.	Size	Part Description	Illustration
10	-	Scissor Jack	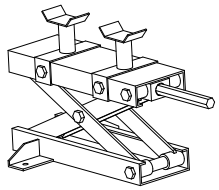
11	-	V-block	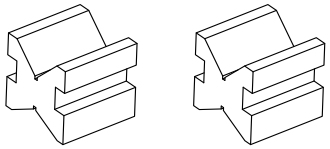

4.2 Measurement Tools

1	-	Vernier Caliper	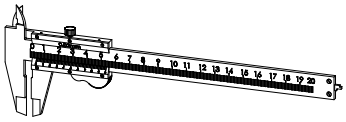
2	0 - 25mm, 25 - 50mm, 50 - 75mm, 75 - 100mm	Micrometer	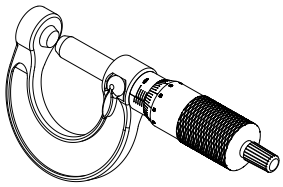
3	-	Bore Gauge	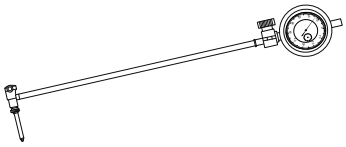
4	-	Dial Gauge with Magnetic Stand	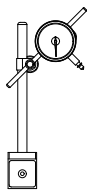
5	-	Tyre Depth Gauge	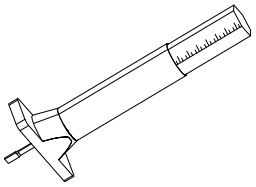
6	-	Steel Ruler	

SPECIAL TOOLS

4.3 Special Tools

4.3.1. Engine

Sl. No.	Part Number	Part Description	Illustration
1	ST30274/a	Magneto Puller Assembly	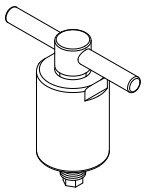
2	ST30260/a	Cam Aligning Plate Top Dead Center (TDC)	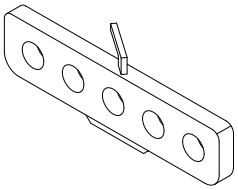
3	ST30300/a	Lock Tool - Crank Top Dead Center (TDC)	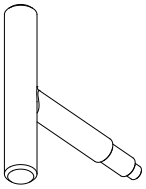
4	ST30259/a	Adapter - Compression Checking	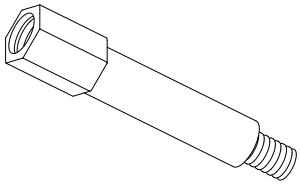
5	ST30266/a	Clutch Holder	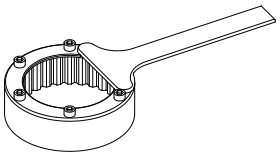
6	ST30271/a	Gear Shifter Shaft NRB and Oil Seal Installer	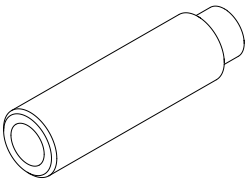
7	ST30296/a	Piston Ring Compressor	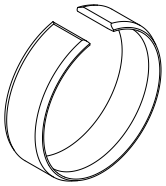
8	ST30294/a	Oil Filter Wrench	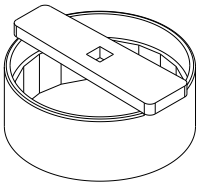

Sl. No.	Part Number	Part Description	Illustration
9	ST-27562-1	Angular Torque Wrench	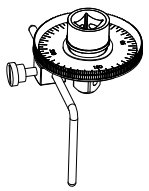
10	ST30264/a	Clutch Activating Shaft Oil Seal Installer	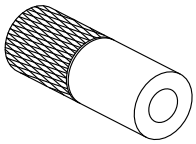
11	ST30262/a	Clutch Activating Lever Top Bearing Installer	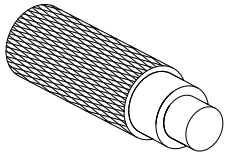
12	ST-27540-1	Clutch Activating Shaft Top Bearing Puller	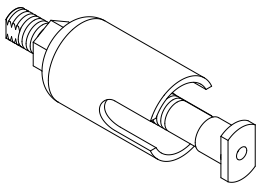
13	ST30261/a	Clutch Activating Lever Bottom Bearing Installer	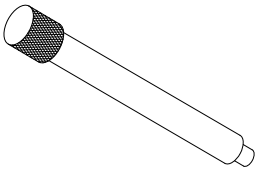
14	ST30263/a	Clutch Act Shaft Bottom Bearing Puller	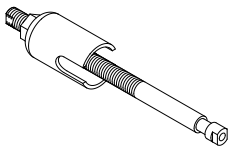
15	ST30270/a	Gear Shifter Drum NRB Installer	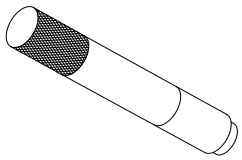
16	ST30293/a	Oil Filter Union Wrench	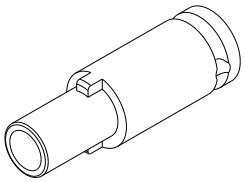

SL. No.	Part Number	Part Description	Illustration
17	ST-27527-2	Tappet Adjusting Tool	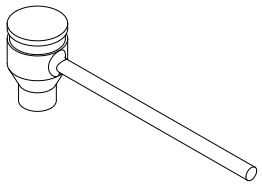
18	ST-27534-2	FD Sprocket Holding Tool	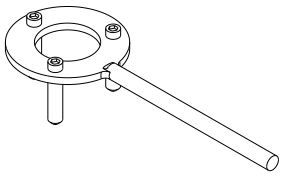
19	ST-27528-2	Valve Spring Compressor	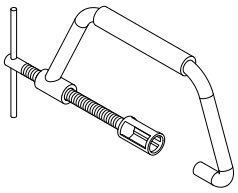

4.3.2. Vehicle

Sl. No.	Part Number	Part Description	Illustration
1	ST30267/a	Frame Adjuster OD 14.8/ ID 10.8 mm-Engine	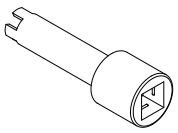
2	ST30268/a	Frame Adjuster OD 16.7/ ID 13 mm-Engine	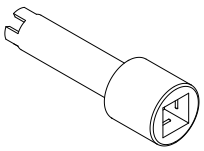
3	ST30269/a	Frame Adjuster OD 21.5/ ID 18 mm-Swingarm	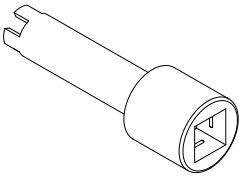
4	ST30272/a	Headstock Bearing Puller-Assembly	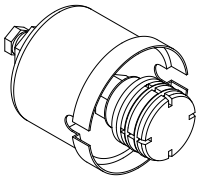
5	ST30273/a	Headstock - Frame Cone Installer	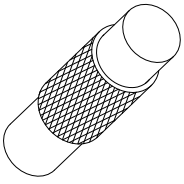

6	ST30298/a	Bearing Puller, T -Stem	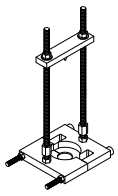
7	ST30299/a	T Stem Taper Roller Bearing Installer	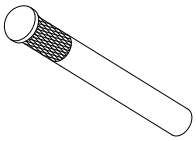
8	ST30297/a	Swing Arm NRB Installer	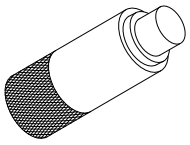
9	ST26461-2	Fork Damper Tube Holder	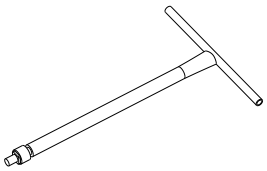
10	ST26485-3	Fork Oil Seal Installer	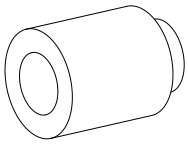

ENGINE

CONTENTS PAGE

5.1. COMPONENTS REMOVAL FROM ENGINE 48

5.2. COMPONENTS ASSEMBLY ONTO ENGINE 78

5.3. ENGINE REMOVAL FROM FRAME 123

5.4. ENGINE ASSEMBLY TO FRAME 154

5.5. ENGINE DISMANTLING..... 188

5.6. ENGINE INSPECTION 235

5.7. CRANKSHAFT JOURNAL BEARING SELECTION 248

5.8. ENGINE ASSEMBLY..... 256

5.9. ENGINE TROUBLESHOOTING 320

COMPONENTS THAT CAN BE DISMANTLED FROM ENGINE WITHOUT REMOVING FROM FRAME

CONTENTS PAGE

5. ENGINE 51

5.1 Components Removal from Engine 51

5.1.1. Drain Plug 51

5.1.2. Oil Filter 52

5.1.3. Starter Motor 52

5.1.4. Breather Hose Connections 53

5.1.5. Breather Box 53

5.1.6. Gear Shift Linkage 53

5.1.7. Throttle Body Covers on LH and RH 54

5.1.8. Throttle Cable 54

5.1.9. Injector, TPS, MAPS, ISC Connections 54

5.1.10. Air Filter Hoses to Throttle Body 55

5.1.11. Throttle Body 55

5.1.12. Inlet Manifold Rubber Flanges 55

5.1.13. Spark Plug Suppressor Caps on LH and RH 56

5.1.14. Spark Plugs 56

5.1.15. Clutch Cable on Clutch Cover 56

5.1.16. Clutch Actuating Lever Assembly 56

5.1.17. Clutch Cover 57

5.1.18. Clutch Actuating Shaft 58

5.1.19. Oil Level Window 58

5.1.20. Clutch Plates 59

5.1.21. Oil Pump 61

5.1.22. Gear Shifter Shaft 61

5.1.23. Stator and GPS Wiring Connectors 63

CONTENTS PAGE

5.1.24. FD Sprocket Cover 63
5.1.25. Gear Position Sensor (GPS) 63
5.1.26. FD Sprocket 64
5.1.27. Reed Valves 65
5.1.28. Cylinder Head Cover 66
5.1.29. Crankshaft Plug On Magneto Cover 67
5.1.30. Rocker Carrier LH from Cylinder Head 67
5.1.31. Rocker Carrier RH from Cylinder Head 68
5.1.32. Auto Chain Tensioner 68
5.1.33. Camshaft Sub Assembly 69
5.1.34. Magneto Cover 70
5.1.35. Stator Assembly with CPS 71
5.1.36. Magneto Rotor Bolt 72
5.1.37. Starter Clutch from Magneto Rotor 73
5.1.38. Cylinder Head 74
5.1.39. Components from Cylinder Head 74
5.1.40. Floating Chain Pad 76
5.1.41. Cylinder Barrel 76
5.1.42. Pistons 76
5.1.43. Oil Pressure Switch 76
5.1.44. Oil Pan 77
5.1.45. Oil Strainer 77
5.1.46. Oil Bypass 77

5. ENGINE

5.1 Components Removal from Engine

⚠ WARNING

The engine and exhaust system get extremely hot during normal operation and direct contact with skin can cause serious burns. Make sure engine is in normal temperature (OR) cooled before starting operation.

NOTE

- *Ensure the motorcycle is upright on a firm and flat surface.*
- *Start the engine and allow the engine and oil to warm up for a few minutes and then turn it OFF to facilitate easy draining of oil.*

5.1.1. Drain Plug

- Loosen and remove oil filler cap **(a)** from the crankcase top on the RH side.
- Use an adjustable plier with soft jaws to unscrew filler cap if necessary.

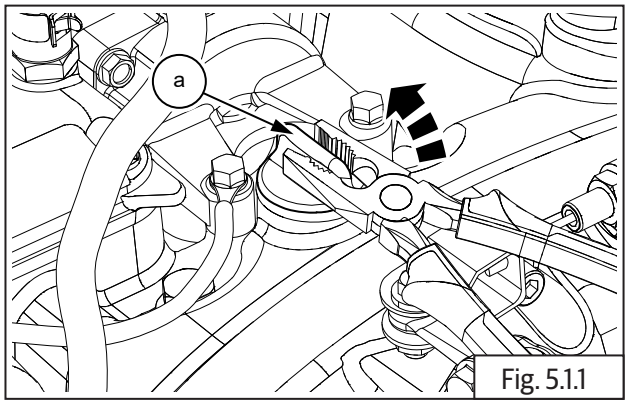

Fig. 5.1.1

	Adjustable plier with soft jaws

- Place a tray under the engine, loosen and remove magnetic drain plug **(M14) (a)** along with washer **(b)** from the front end of the oil sump.
- Allow the engine oil to drain out completely from the engine.

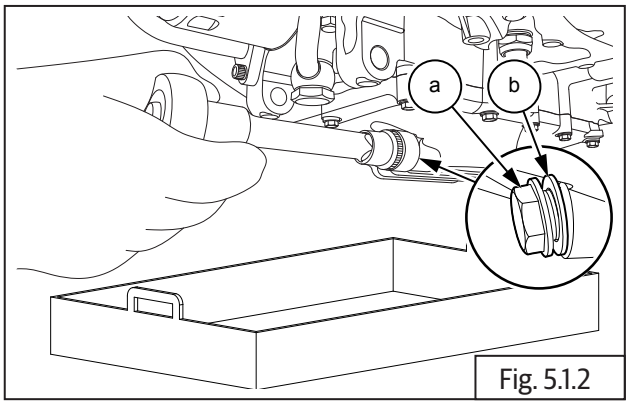

Fig. 5.1.2

	19 mm Socket with Ratchet

⚠ WARNING

DO NOT spill oil. Collect used oil in a separate container and dispose it through authorized disposal agencies in your locality. Avoid skin OR body contact with the oil. Promptly wash affected area with soap and water.

NOTE

- *Ensure the engine oil is drained completely.*
- *Tilt the motorcycle on both LH and RH sides to drain the oil completely.*
- *After draining the oil suitably cover the oil filler cap hole to prevent debris and/OR small components falling into the crankcase.*

5.1.2. Oil Filter

- Place a tray under the engine oil filter.
- Loosen and remove oil filter **(a)** located on front bottom of engine **(b)** using special tool.

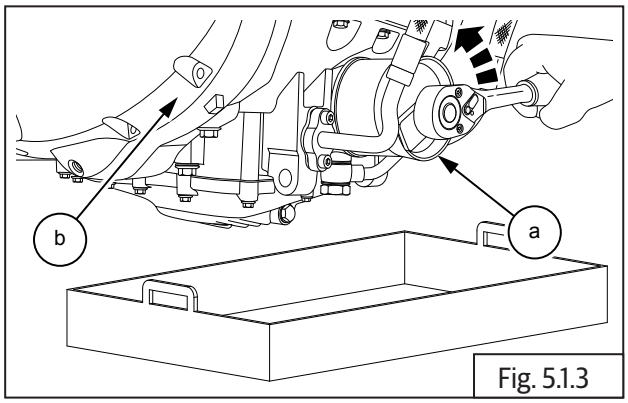

Fig. 5.1.3

SPL 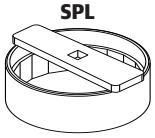	Part No: ST30294/a
	Part Name: Oil filter wrench with Ratchet

5.1.3. Starter Motor

⚠ CAUTION

Ensure battery cables are disconnected.

Ensure that the ignition and kill switch are in OFF position.

- Lift the rubber cover slowly, loosen and remove Hex nut **(M6) (a)** from starter motor **(b)** and disconnect positive (+) terminal.

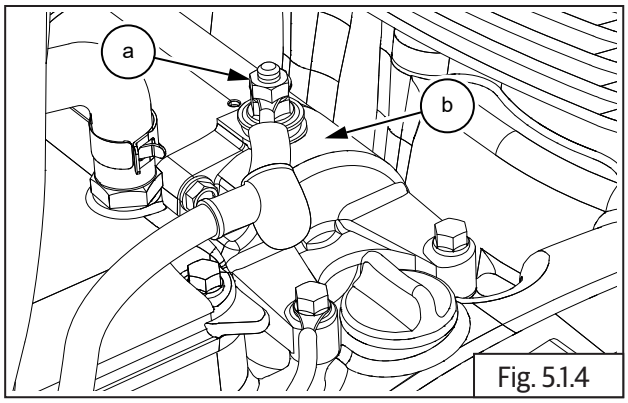

Fig. 5.1.4

	10 mm Double end spanner

- Loosen and remove 2 Nos. Hex flange head mounting bolts **(M5) (a)** holding starter motor **(b)** to crankcase **(c)**.
- Remove negative (-ve) cable from the mounting bolt.

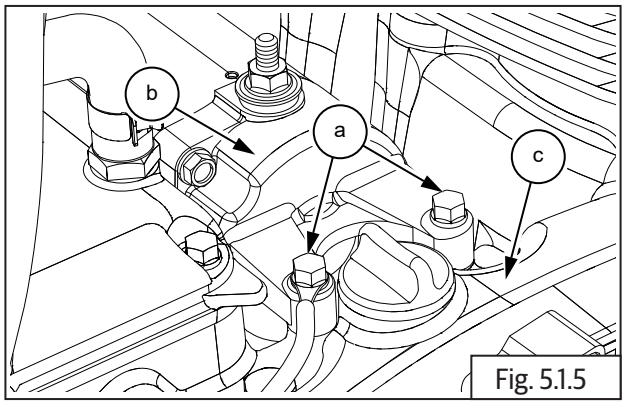

Fig. 5.1.5

	8 mm Socket with Ratchet

- Gently pull out and lift starter motor **(a)** from engine.

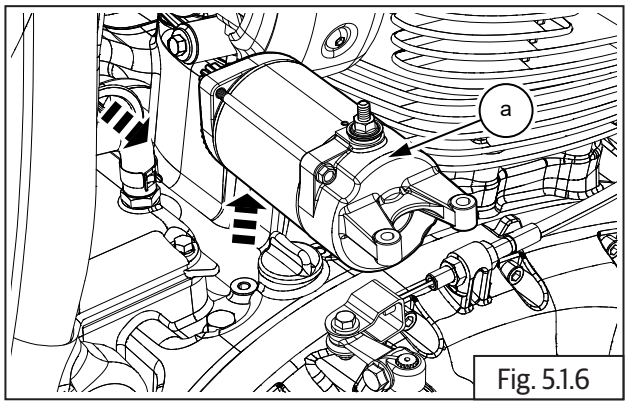

Fig. 5.1.6

NOTE

- *Do not tap on the starter motor while removing it. Tapping may damage the internal components.*

5.1.4. Breather Hose Connections

- Release the clamp **(a)** to disconnect breather hose **(b)** from air filter box **(c)**.

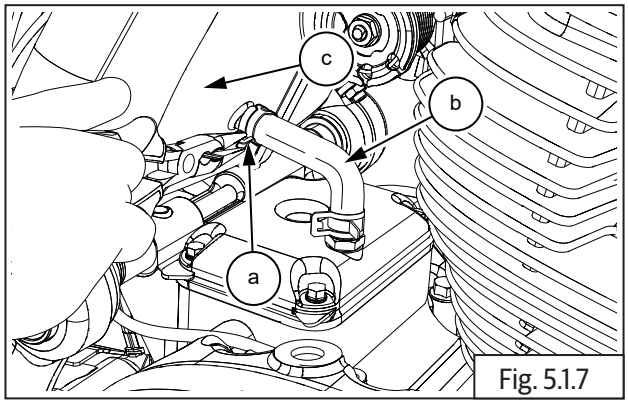

Fig. 5.1.7

	Nose plier

- Release the clamp **(a)** to disconnect breather hose **(b)** from breather box **(c)**.

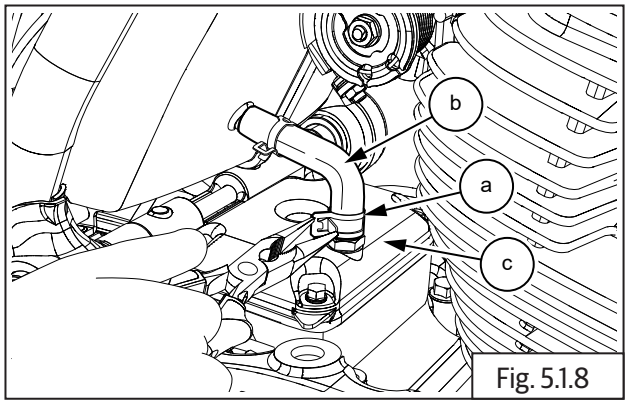

Fig. 5.1.8

	Nose plier

- Remove breather hose **(a)**.

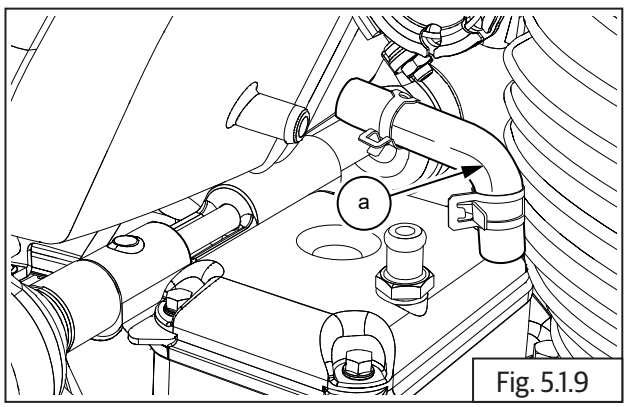

Fig. 5.1.9

5.1.5. Breather Box

- Loosen and remove the 5 Nos. Hex flange head bolts **(M6) (a)**.

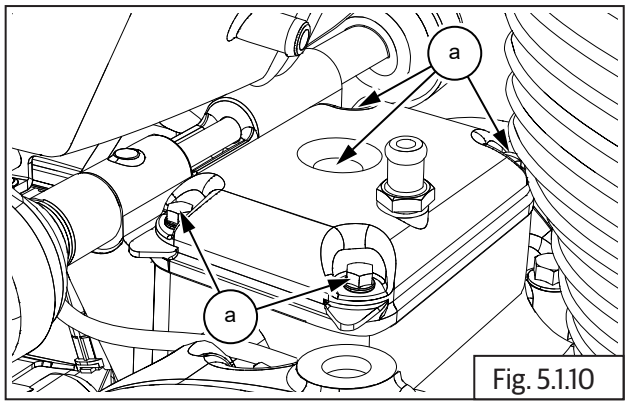

Fig. 5.1.10

	10 mm Socket with Ratchet

- Gently remove breather box cover **(a)** along with gasket **(b)**.

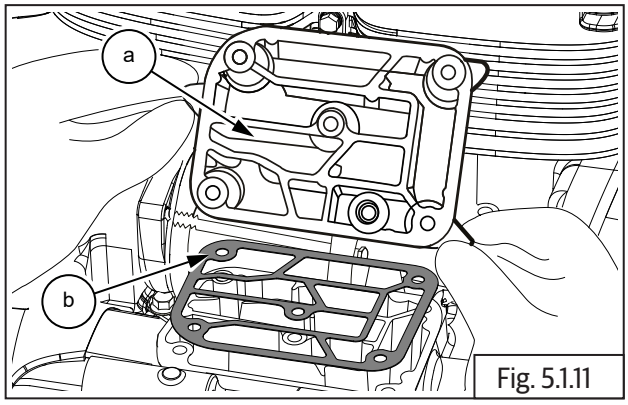

Fig. 5.1.11

5.1.6. Gear Shift Linkage

- Loosen Hex flange bolt **(M6) (a)** to remove gear shift lever **(b)** from gear shaft.

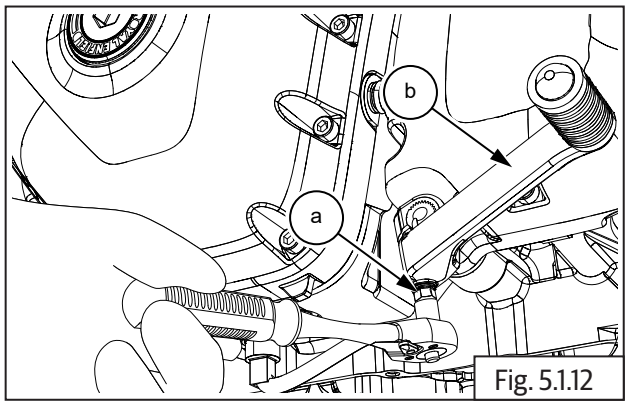

Fig. 5.1.12

	10 mm Socket with Ratchet

5.1.7. Throttle Body Covers on LH and RH

- Loosen and remove 2 Nos. Hex socket button head screws **(M5) (a)** on the throttle body cover **(b)** RH.
- Repeat the above process to remove cover LH.

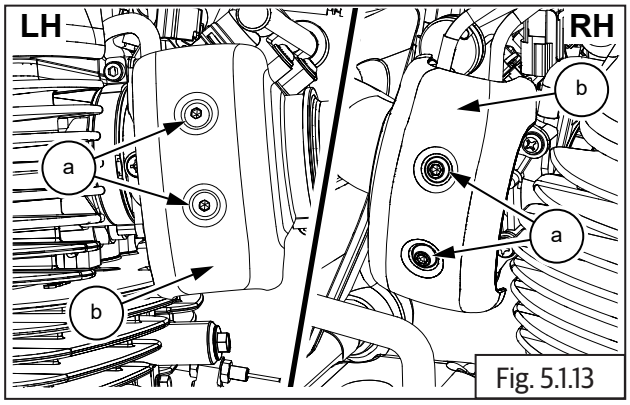

Fig. 5.1.13

	4 mm Allen key

5.1.8. Throttle Cable

- Disconnect throttle cables from throttle body. Refer (Section 5.3.15).

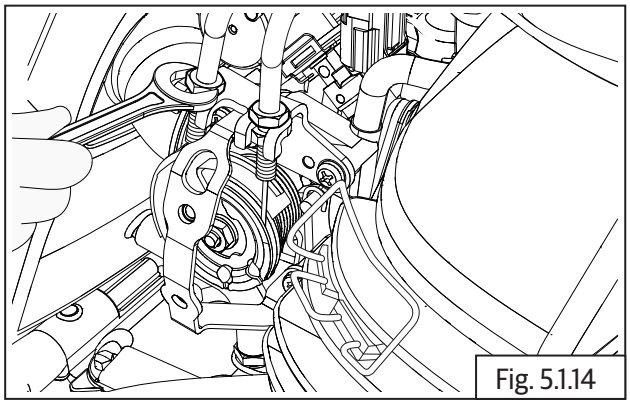
Fig. 5.1.14

5.1.9. Injector, TPS, MAPS, ISC Connections

Injector, Throttle Position Sensor (TPS), Manifold Absolute Pressure (MAP) Sensor and Idle Speed Controller (ISC) Connections

- Ensure ignition and stop switch are in OFF position.
- Disconnect throttle position sensor connector **(a)** from LH throttle body **(b)**.

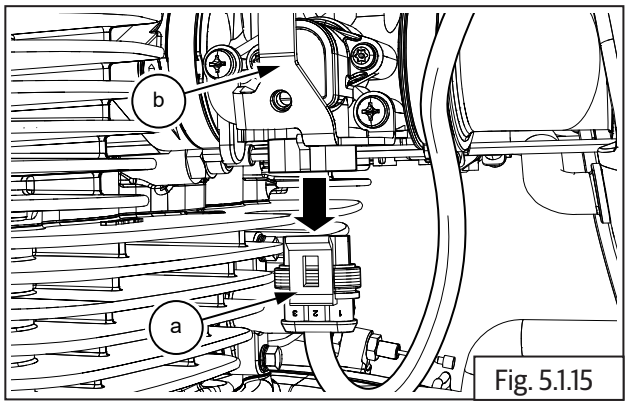

Fig. 5.1.15

- Gently press connector lock to disconnect fuel injector connectors **(a)** from LH and RH of throttle body **(b)**.

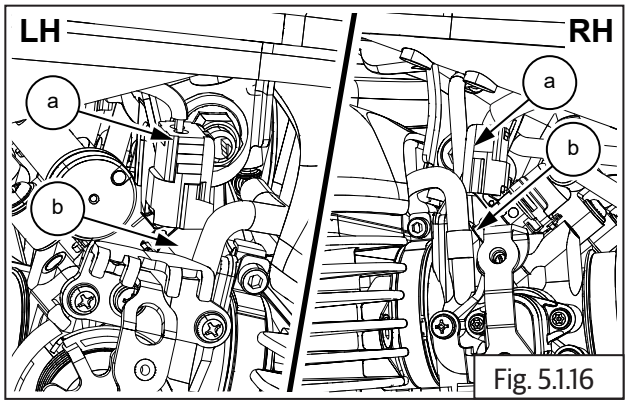

Fig. 5.1.16

- Disconnect idle speed control sensor (ISC) connector **(a)** from throttle body **(b)**.

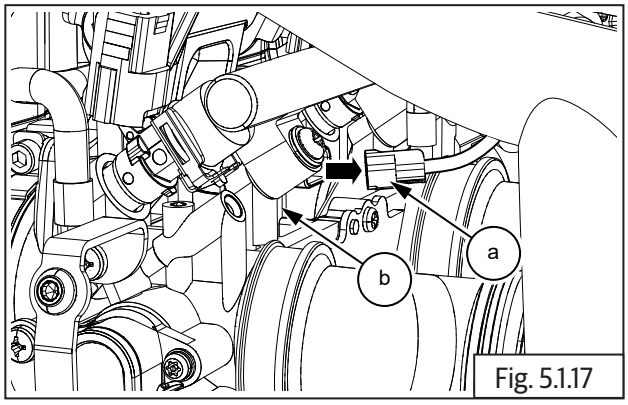

Fig. 5.1.17

5.1.10. Air Filter Hoses to Throttle Body

- Loosen both LH and RH worm clip screws **(M5) (a)** and separate the hose from air filter housing **(b)** to throttle body **(c)**.

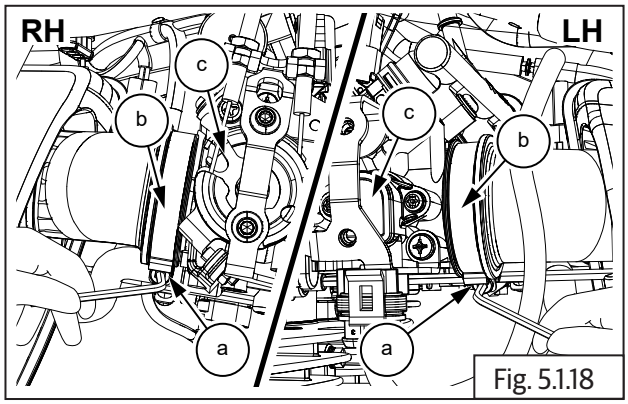

Fig. 5.1.18

	4 mm Allen key

5.1.11. Throttle Body

- Ensure TPS, MAP and ISC wiring connectors are disconnected (section 5.3.16).
- Ensure the air filter housing is disconnected (section 6.1.2).
- Ensure the throttle cables are disconnected (section 5.3.15).
- Disconnect hoses **(a)** from canister purge valve.

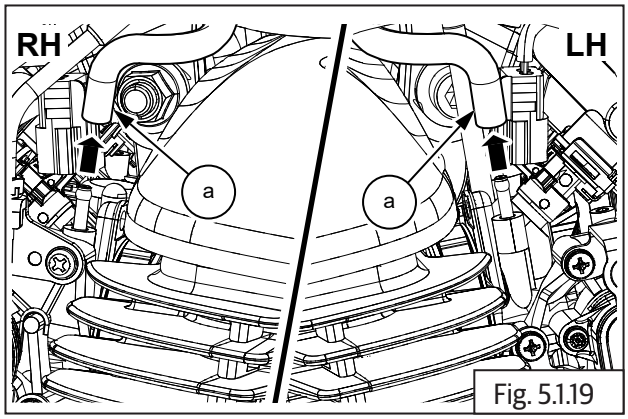

Fig. 5.1.19

- Loosen LH and RH worm clip screws **(M5) (a)** to disconnect throttle body from inlet manifolds.

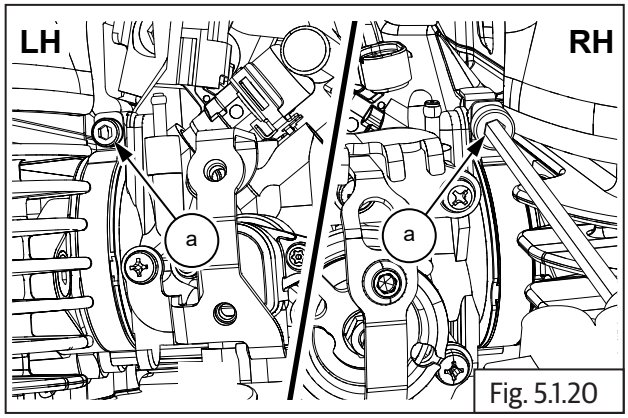

Fig. 5.1.20

	4 mm Allen key

5.1.12. Inlet Manifold Rubber Flanges

- Loosen and remove 4 Nos. Countersunk socket head bolts **(M5) (a)** located on inlet manifold of engine.

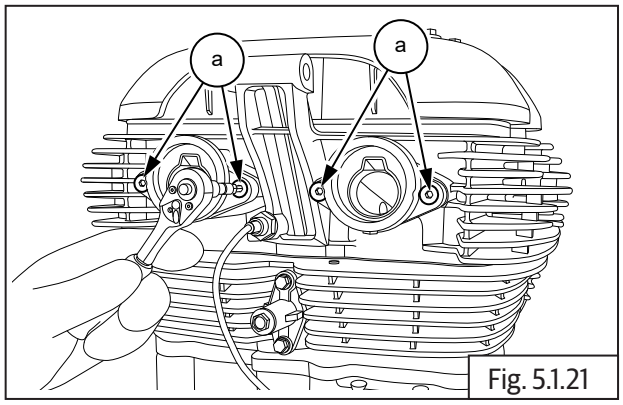

Fig. 5.1.21

	4 mm Allen socket with Ratchet

- Remove 2 Nos. inlet manifold rubber flange **(a)** from engine.

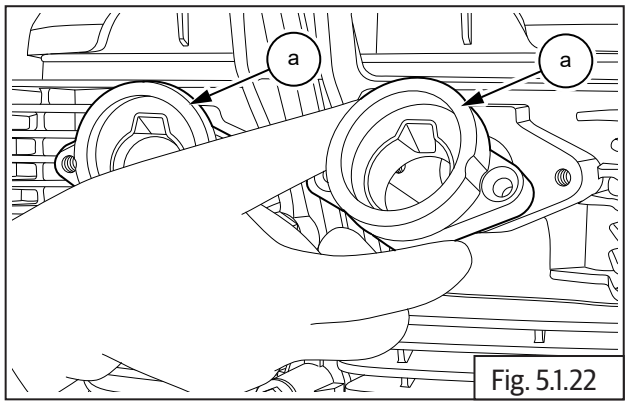

Fig. 5.1.22

5.1.13. Spark Plug Suppressor Caps on LH and RH

- Gently pull out the spark plug suppressor caps from the spark plugs LH & RH.

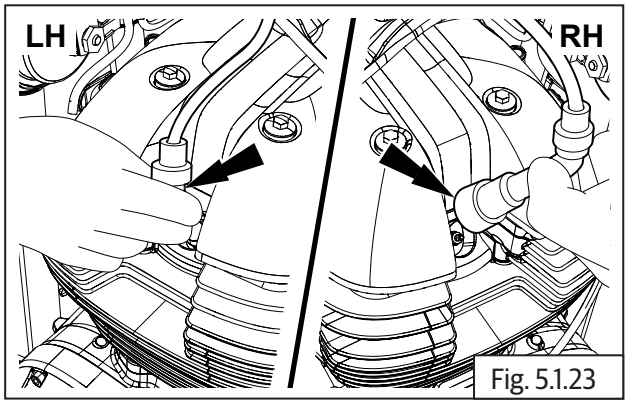

Fig. 5.1.23

5.1.14. Spark Plugs

⚠ CAUTION

Ensure that the ignition and kill switch are in OFF position.

Before removing the spark plugs, blow away any dirt accumulated in the spark plug area with compressed air to prevent it from falling into cylinder head.

- Loosen and remove spark plug **(a)** from RH cylinder head.

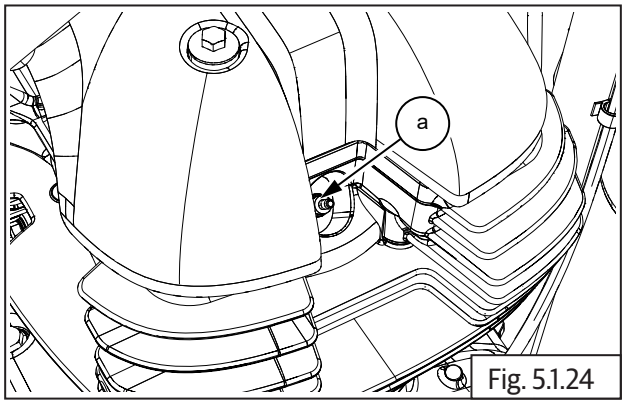

Fig. 5.1.24

	16 mm Socket with Ratchet

- Repeat the procedure to remove LH spark plug.

5.1.15. Clutch Cable on Clutch Cover

- Disconnect clutch cable assembly **(a)** from clutch cover **(b)**. Refer clutch cable dismantling procedure (section 6.2.1).

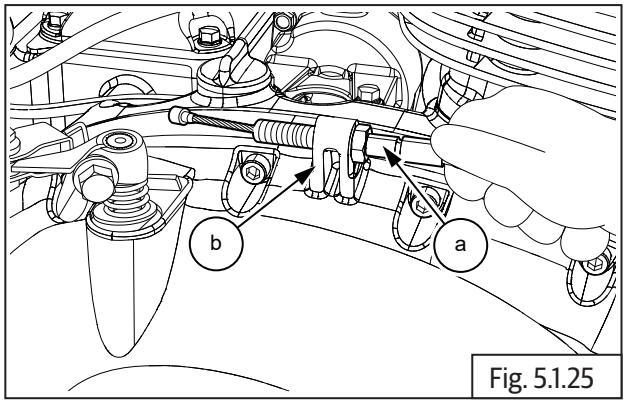

Fig. 5.1.25

5.1.16. Clutch Actuating Lever Assembly

- Loosen and remove Hex head bolt **(M6) (a)** from clutch actuating lever assembly **(b)**.

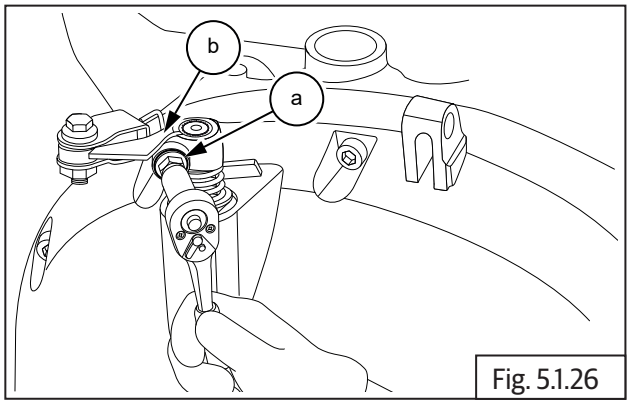

Fig. 5.1.26

	10 mm Socket with Ratchet

- Rotate clutch actuating lever **(a)** in clockwise direction to release tension in spring **(b)**.

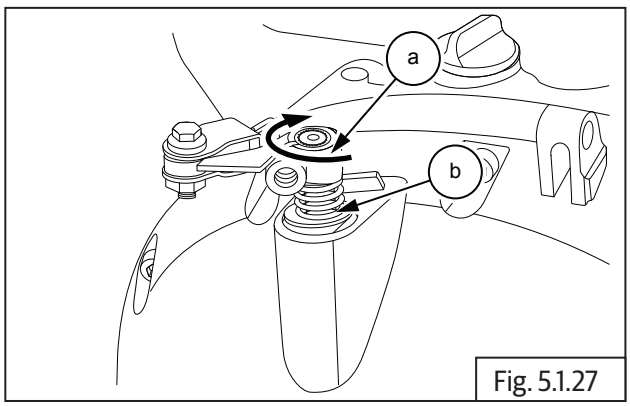

Fig. 5.1.27

- Remove clutch actuating lever **(a)** from clutch shaft **(b)** on cover.

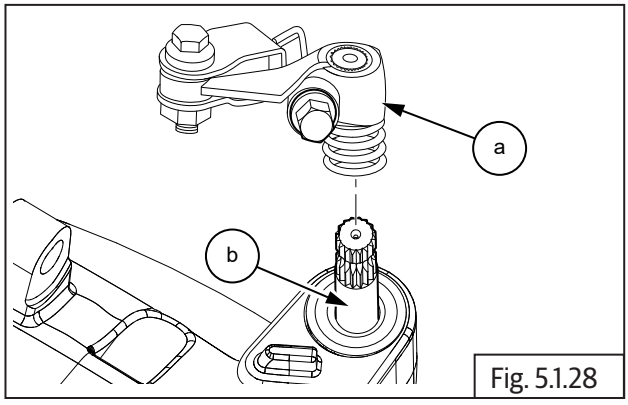

Fig. 5.1.28

	Wedge

NOTE
• *Use a suitable wedge to slightly expand the slot in the clutch actuating arm and gently lift from the shaft.*

5.1.17. Clutch Cover

- Loosen and remove 14 Nos. Hex socket screws **(M6) (a)** in a crisscross pattern to remove clutch cover **(b)** from motorcycle RH.

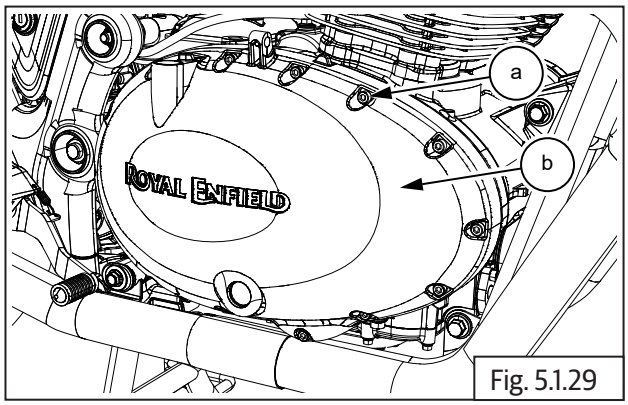

Fig. 5.1.29

	5 mm Allen socket with Ratchet

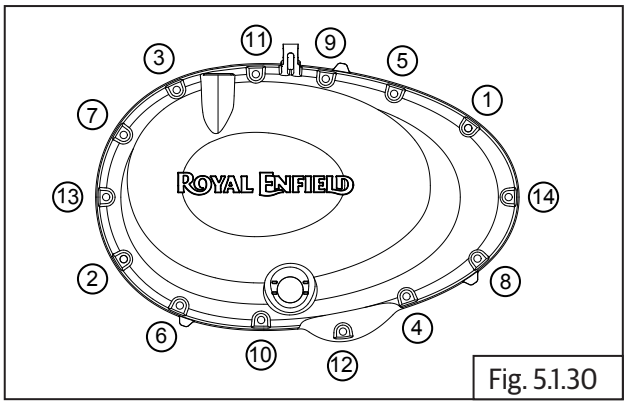

Fig. 5.1.30

- If the cover is jammed in the engine, gently tap on the tabs **(a)** provided on the cover using a plastic/ rubber mallet.

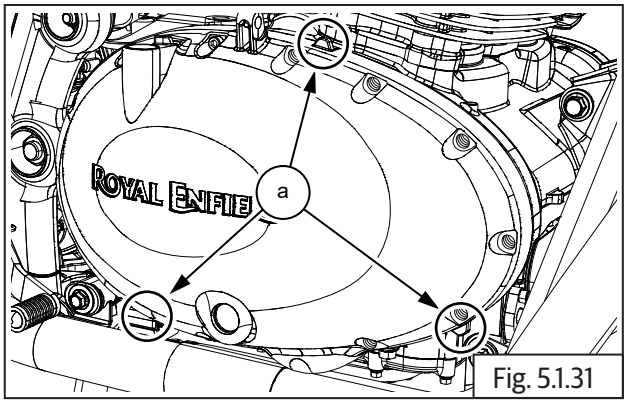

Fig. 5.1.31

	Plastic/Rubber mallet

- Remove gasket **(a)** and dowel pins **(b)** from clutch cover/engine.

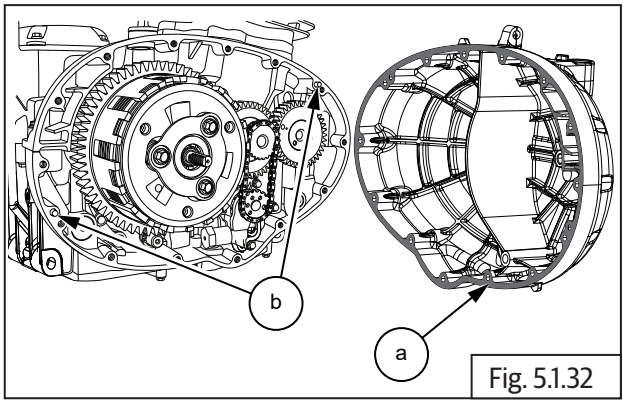

Fig. 5.1.32

⚠ CAUTION
Do not use a sharp tool to scrap the gasket material from the joint faces. **If required scrap only with a soft and blunt tool.**

5.1.18. Clutch Actuating Shaft

- Gently remove the E clip **(a)** and washer **(b)** from the bottom of the clutch actuating shaft inside clutch cover.

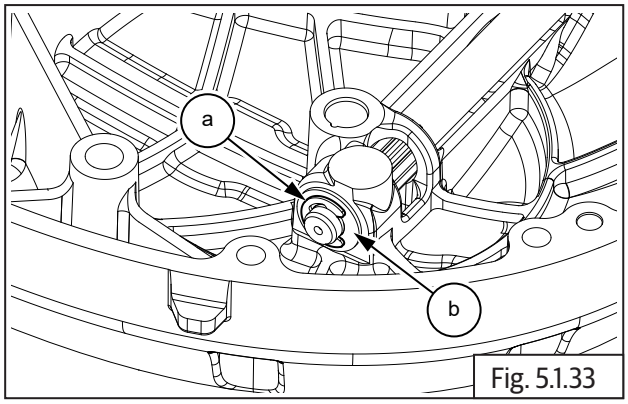

Fig. 5.1.33

	Nose plier

- Remove oil seal **(a)** along with washer **(b)** from outer clutch case.

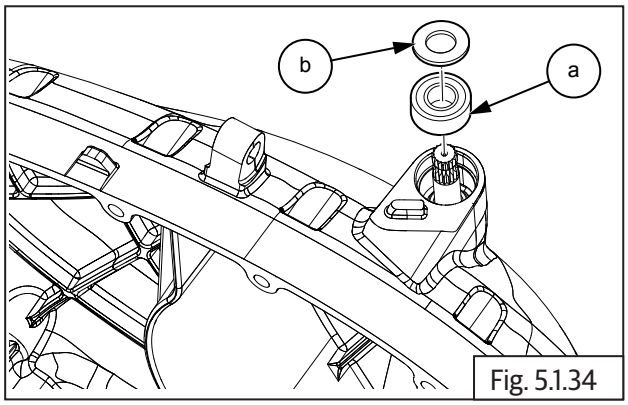

Fig. 5.1.34

- Gently pull out clutch actuating shaft **(a)** from clutch cover **(b)**.

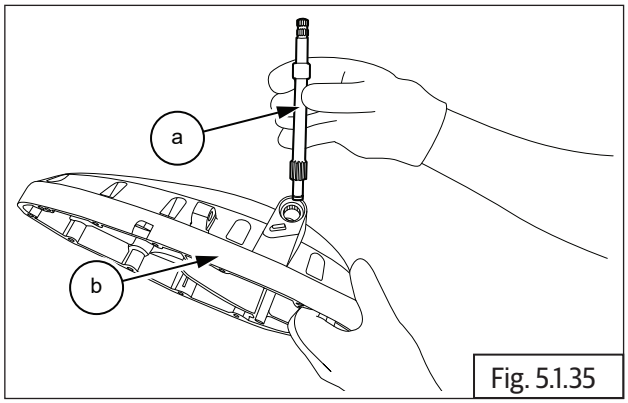

Fig. 5.1.35

- Remove needle roller bearings **(a)** from clutch cover with special tool.

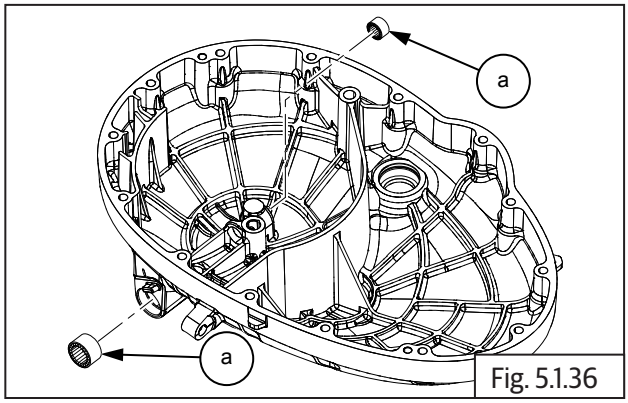

Fig. 5.1.36

SPL 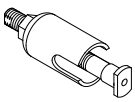	Part No: ST30265/a
	Part Name: Clutch Actuating Shaft Top Bearing Puller

SPL 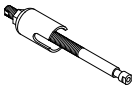	Part No: ST30263/a
	Part Name: Clutch Actuating Shaft Bottom Bearing Puller

5.1.19. Oil Level Window

- Remove the circlip **(a)** on the oil level window inside clutch cover.

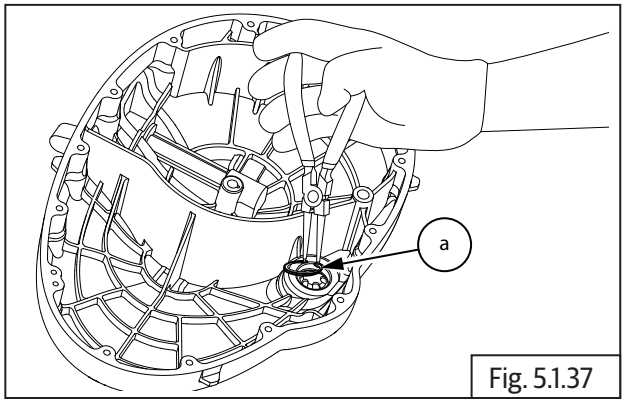

Fig. 5.1.37

	Circlip plier

- Gently press oil window **(a)** from outer side to remove from clutch cover.

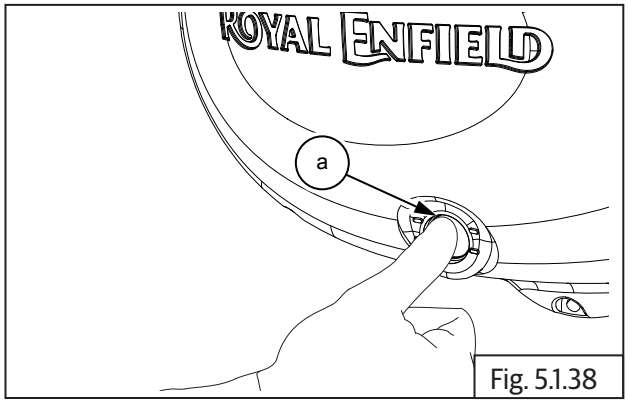

Fig. 5.1.38

5.1.20. Clutch Plates

⚠ CAUTION

Bolts are under spring tension. Loosen bolts progressively and slowly until spring tension is completely released.

- Loosen 3 Nos. Hex flange head bolts **(M6) (a)** on the pressure plate evenly and slowly until tension is released completely.

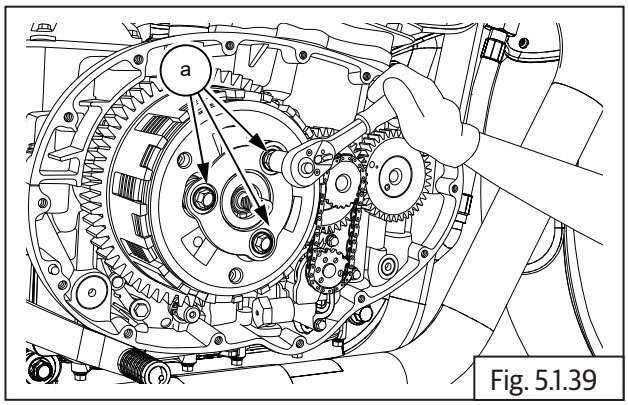

Fig. 5.1.39

	10 mm Socket with Ratchet

- Hold pressure plate **(a)** and remove the bolts **(b)**.
- Remove pressure plate and spring **(c)** from clutch hub.

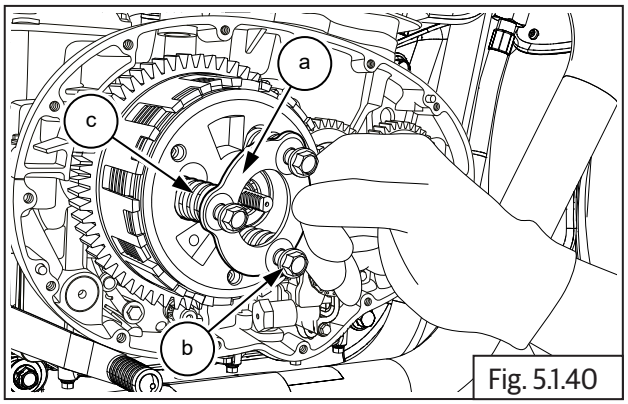

Fig. 5.1.40

- Remove clutch hub **(b)** along with 2 friction plates, 1 steel plate and pull rod **(a)** from the clutch bell.

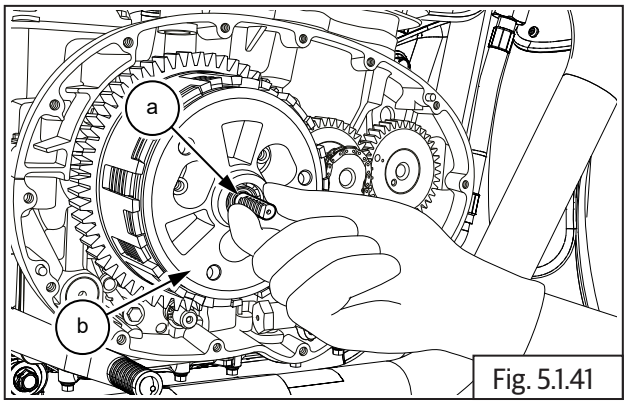

Fig. 5.1.41

- Remove the pull rod from the inner side of clutch bell.
- Remove 1st friction plate **(a)**, steel plate **(b)** and 2nd friction plate **(c)** from clutch hub **(d)**.

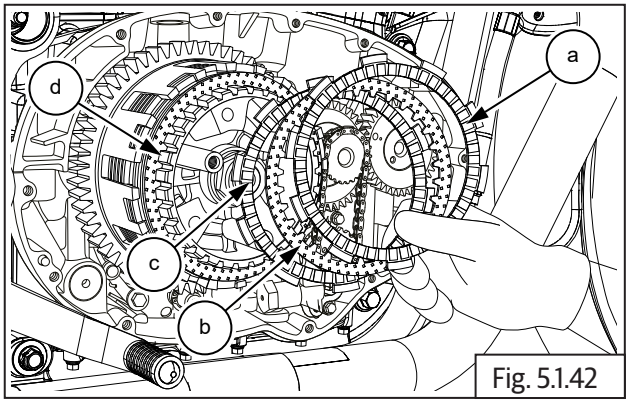

Fig. 5.1.42

- Locate special tool **(a)** on clutch center **(b)** and ensure it is seated fully on the splines.
- Hold the clutch center firmly and remove Hex "U" nut **(M17) (b)** by rotating clockwise.

⚠ CAUTION
Hex "U" nut is a left hand thread. Wrong rotation may damage the threads.

- Remove Hex U nut and washer from countershaft.

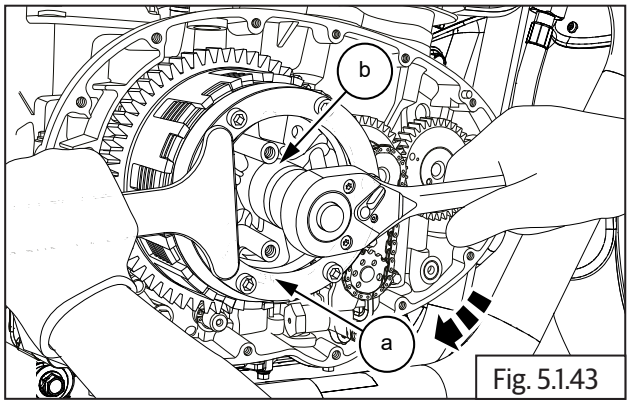

Fig. 5.1.43

SPL 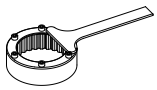	Part No: ST30266/a
	Part Name: Clutch holder

	24 mm Socket with Ratchet

- Remove special tool and pull out clutch bell assembly **(a)** from the counter shaft along with the remaining 6 plates **(b)** (3 each friction and steel plates) from the clutch housing.

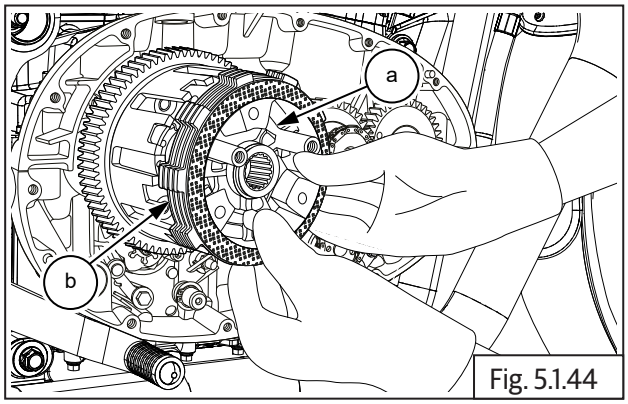

Fig. 5.1.44

NOTE
• *If the plates are to be reused, suitably mark the plates so that they can be reassembled in the same sequence as it was before dismantling.*

- Remove thrust washer **(a)** from counter shaft.

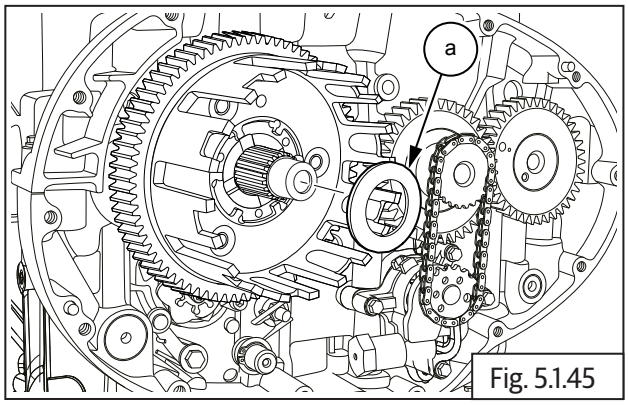

Fig. 5.1.45

- Remove clutch housing **(a)** from counter shaft.

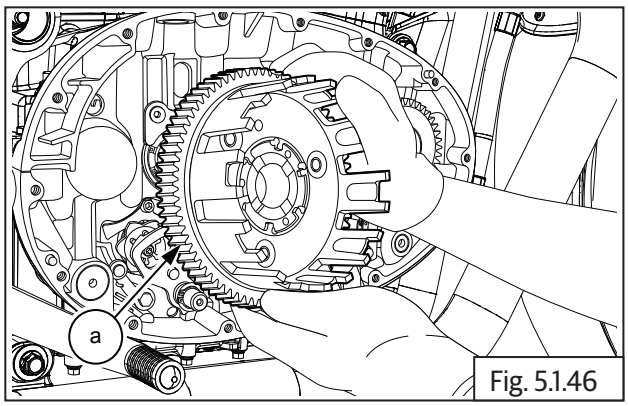

Fig. 5.1.46

- Remove the needle bearing **(a)**.

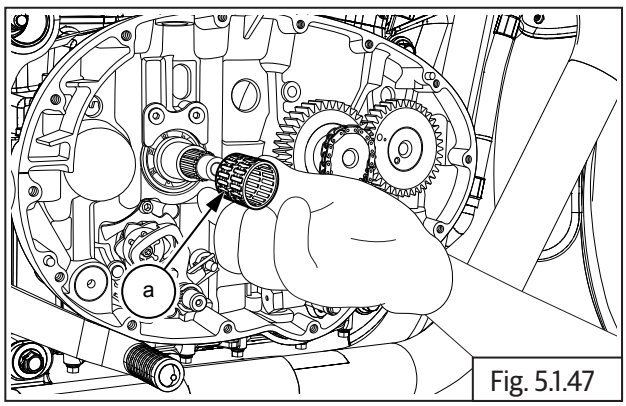

Fig. 5.1.47

- Remove collar bush **(a)** from counter shaft.

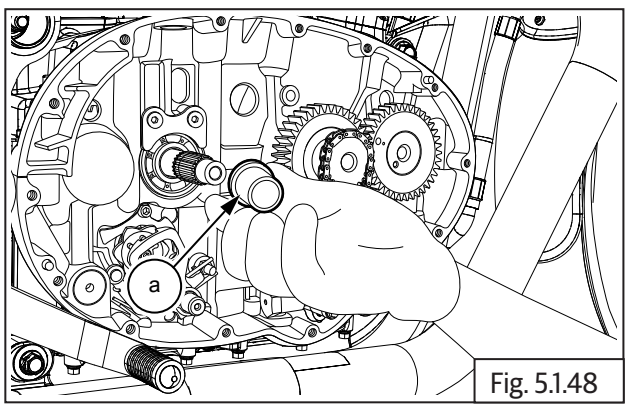

Fig. 5.1.48

5.1.21. Oil Pump

- Loosen and remove Hex flange bolt **(M5) (a)** on oil pump sprocket.

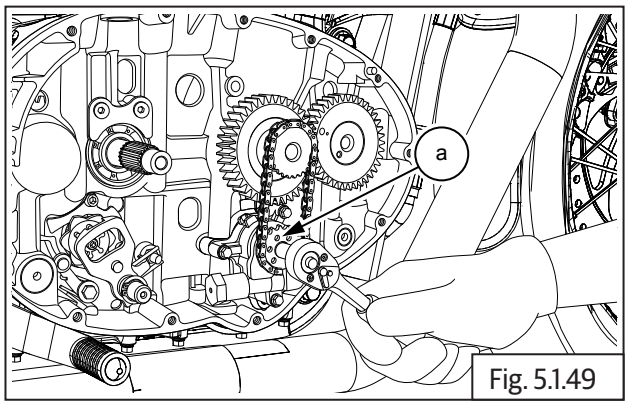

Fig. 5.1.49

	8 mm Socket with Ratchet

- Gently pull out the sprocket **(a)** from oil pump shaft.
- Release and remove chain **(b)** from the teeth on crankshaft sprocket **(c)**.

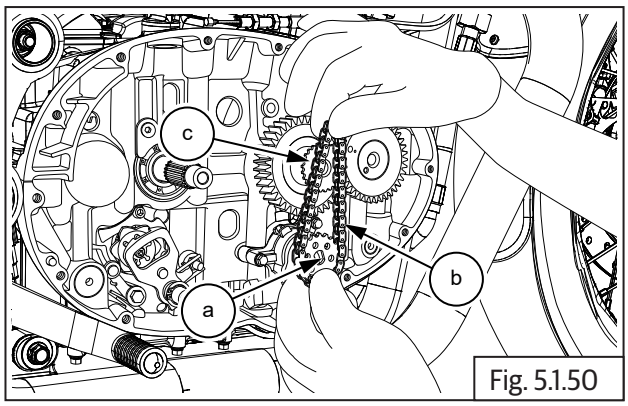

Fig. 5.1.50

- Loosen and remove 4 Nos. Hex flange head bolts **(M5) (a)** to separate oil pump from crankcase.

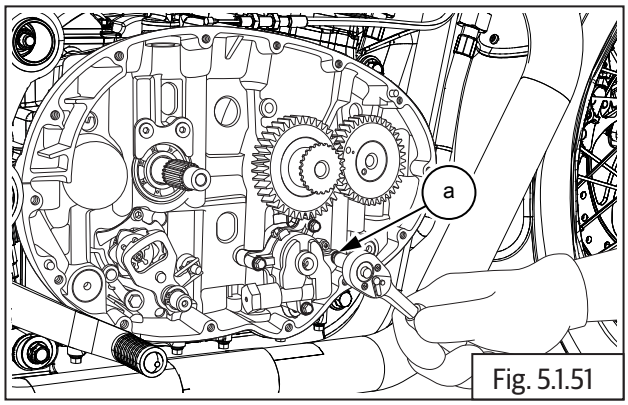

Fig. 5.1.51

	8 mm Socket with Ratchet

- Remove the oil pump **(a)** along with O-ring **(b)**.

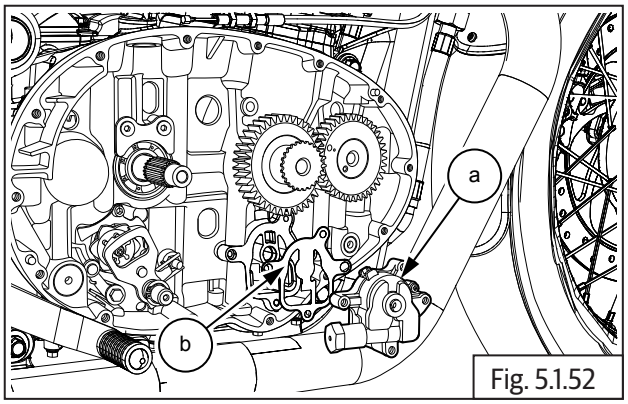

Fig. 5.1.52

NOTE

- *Inspect O-ring for any deformation OR damage and replace if required.*
- *The oil pump does not have any serviceable parts, hence as to be replaced only as a complete assembly.*

5.1.22. Gear Shifter Shaft

- Remove the circlip **(a)** from shifter shaft **(b)** on engine LH side.

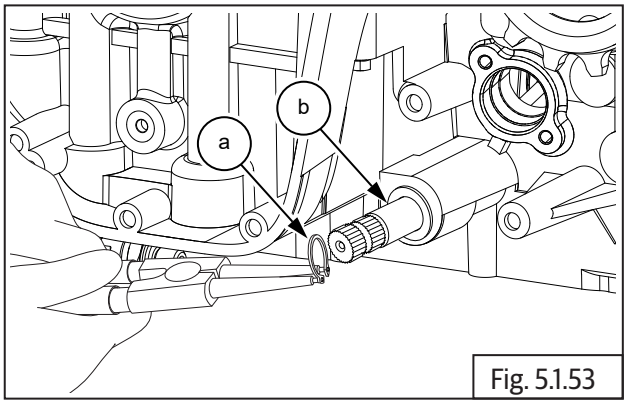

Fig. 5.1.53

	Circlip plier

- Remove the washer **(a)** from shifter shaft.

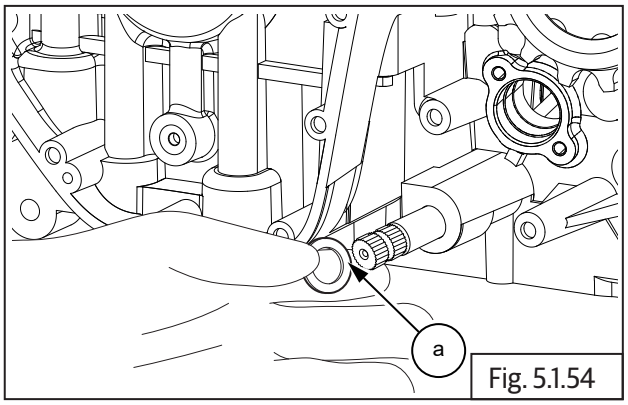

Fig. 5.1.54

- Gently pull out shifter shaft assembly **(a)** from engine RH side.

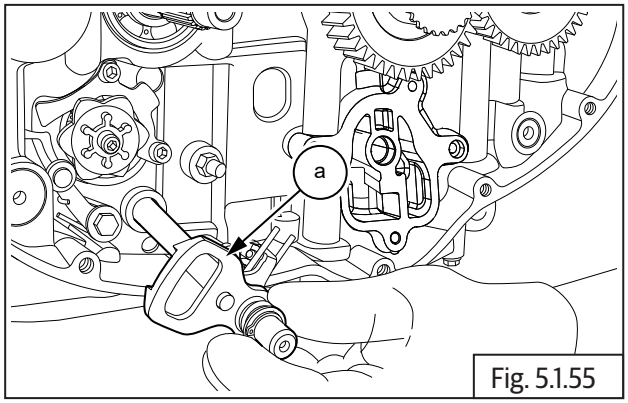

Fig. 5.1.55

- Remove circlip **(a)** from shorter end of shifter shaft **(b)**.

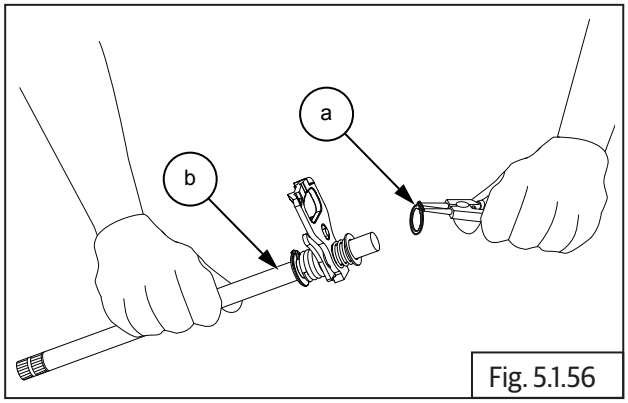

Fig. 5.1.56

	Circlip plier

- Remove washer **(a)** from shorter end of shifter shaft **(b)**.

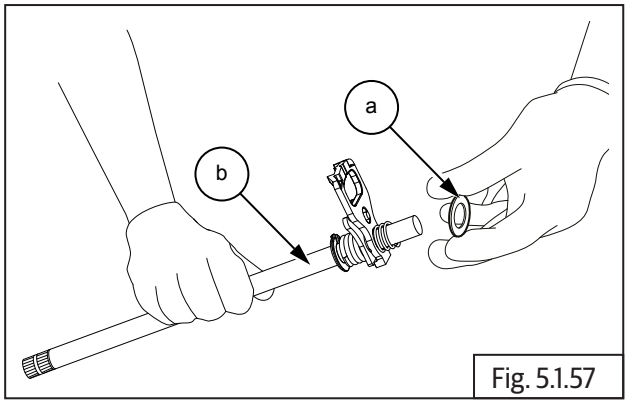

Fig. 5.1.57

- Remove spring **(a)** from shifter shaft **(b)**.

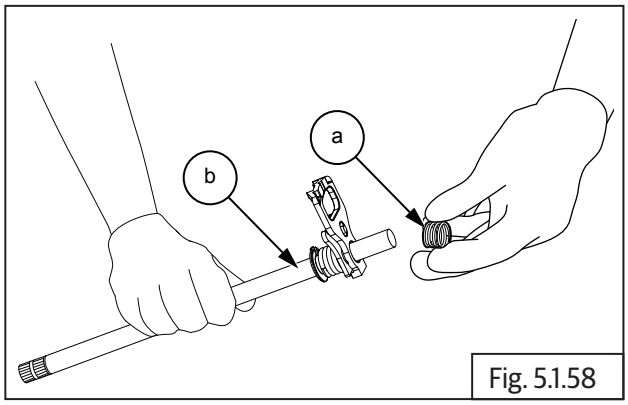

Fig. 5.1.58

- Remove plate **(a)** from shorter end of shifter shaft **(b)**.

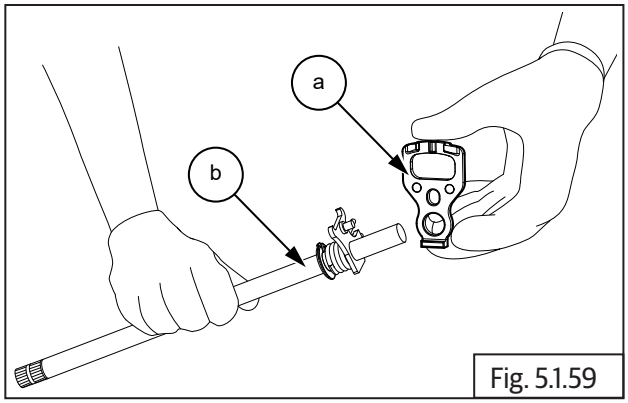

Fig. 5.1.59

- Remove circlip **(a)** from longer end of shifter shaft **(b)**.

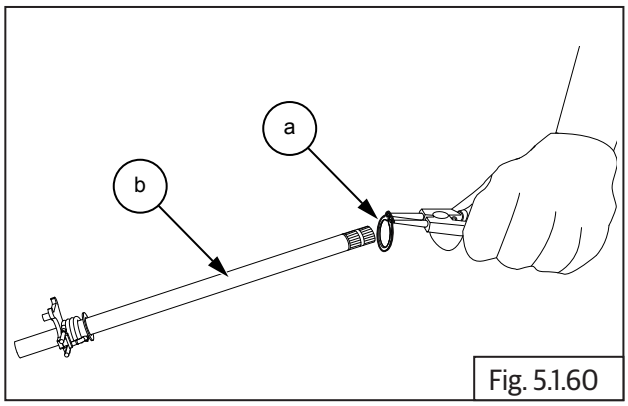

Fig. 5.1.60

	Circlip plier

- Remove washer **(a)** from longer end of shifter shaft **(b)**.

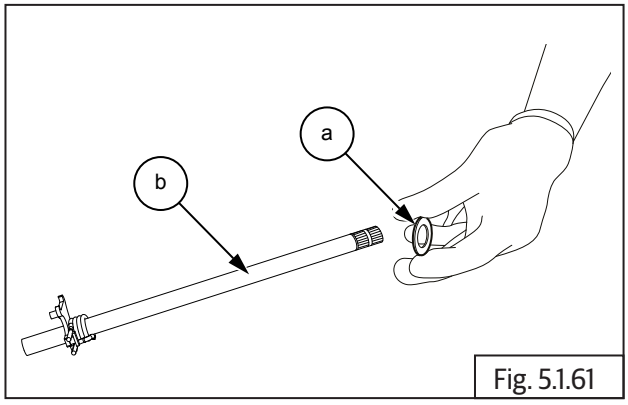

Fig. 5.1.61

- Expand spring lugs and pull out spring **(a)** from longer end of shifter shaft **(b)**.

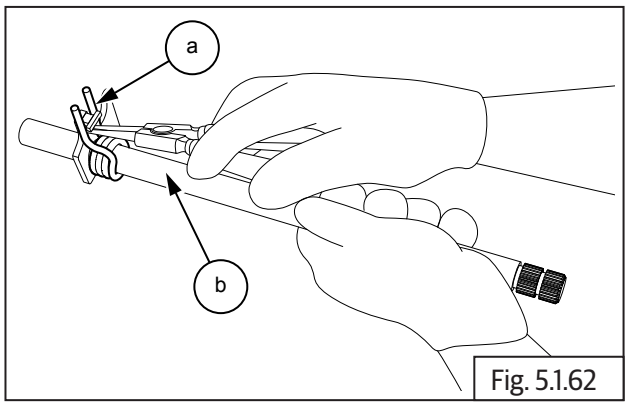

Fig. 5.1.62

	Circlip plier

5.1.23. Stator and GPS Wiring Connectors

NOTE
• *Ensure 2 Nos. black wiring connectors* located on *rear side of engine are disconnected.*

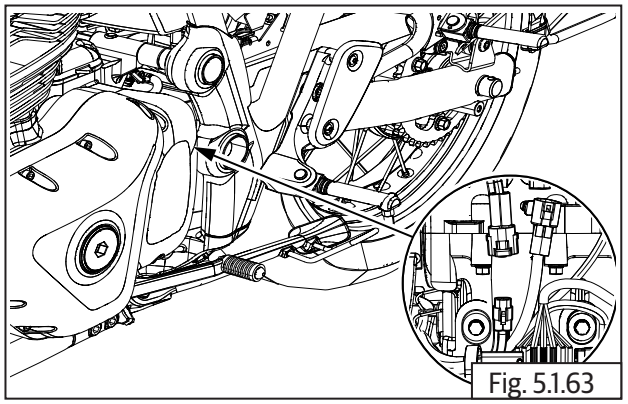
Fig. 5.1.63

5.1.24. FD Sprocket Cover

- Loosen and remove 3 Nos. Hex socket head screws **(M6) (a)** from FD sprocket cover **(b)** on the LH side of engine, in the order shown (1, 2 & 3).

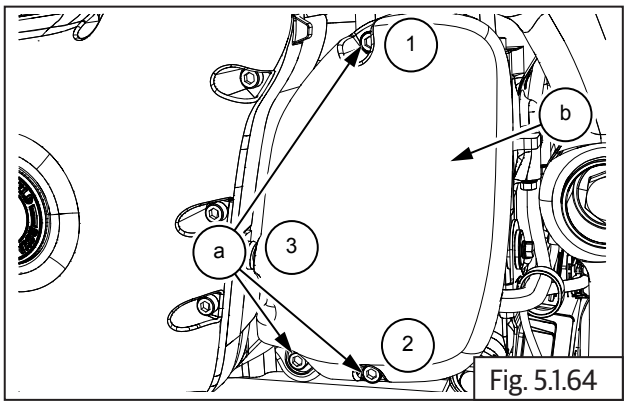

Fig. 5.1.64

	5 mm Allen socket with Ratchet

- Gently pull out FD sprocket cover **(a)**.

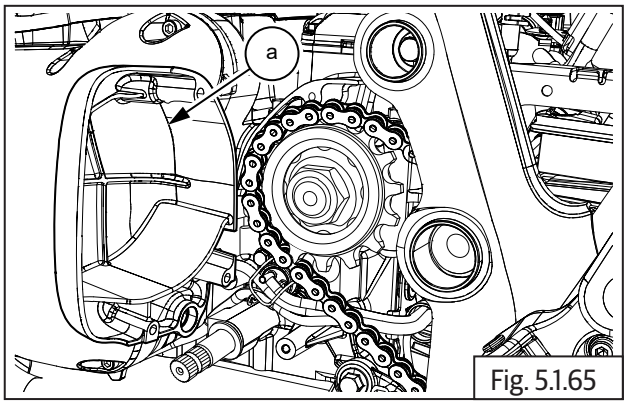

Fig. 5.1.65

5.1.25. Gear Position Sensor (GPS)

- Loosen and remove 2 Nos. Hex flange head bolts **(M6) (a)** to disconnect gear position sensor holder.

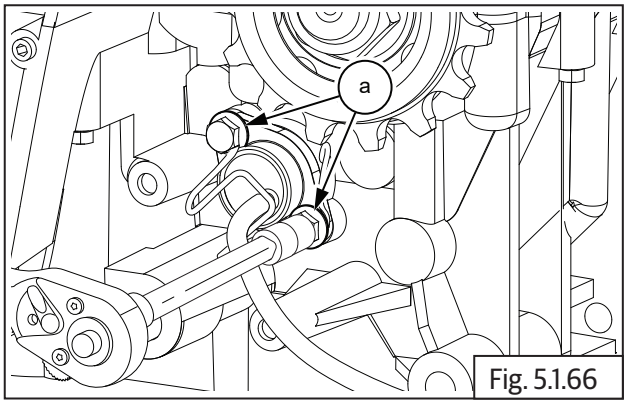

Fig. 5.1.66

	10 mm Socket with Ratchet

- Remove cable holder **(a)**.

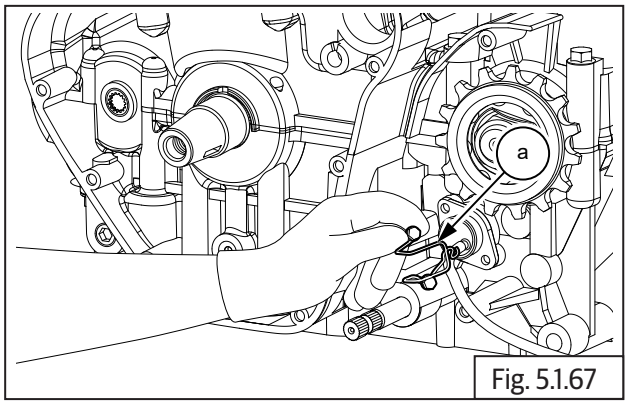

Fig. 5.1.67

- Gently remove the gear position sensor **(a)**.

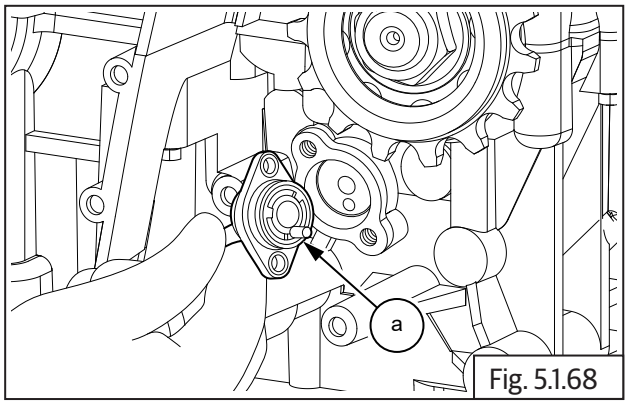

Fig. 5.1.68

5.1.26. FD Sprocket

- Loosen rear wheel and chain adjusters nuts (LH & RH) to increase chain slackness, Refer (Section 6.8.3).
- Gently remove chain **(a)** from FD sprocket **(b)**.

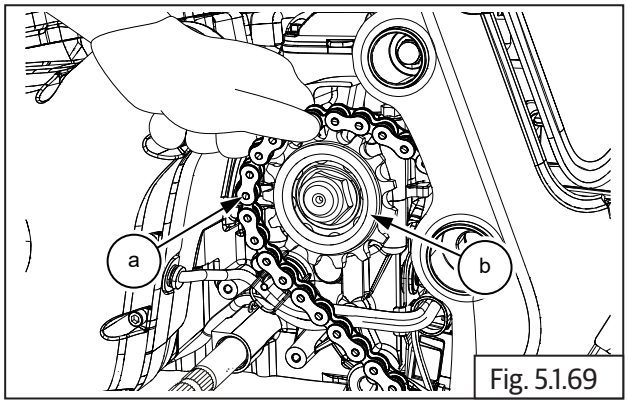

Fig. 5.1.69

- Straighten lock tab washer **(a)** located over FD sprocket **(b)**.

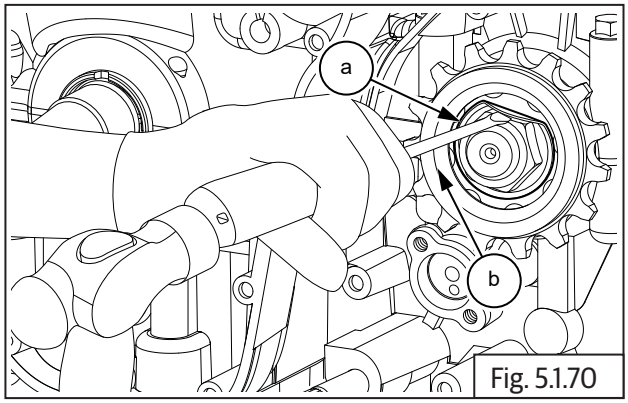

Fig. 5.1.70

	Chisel and Hammer

- Locate special tool over FD sprocket **(a)** and loosen hex "U" nut **(M20) (b)**.

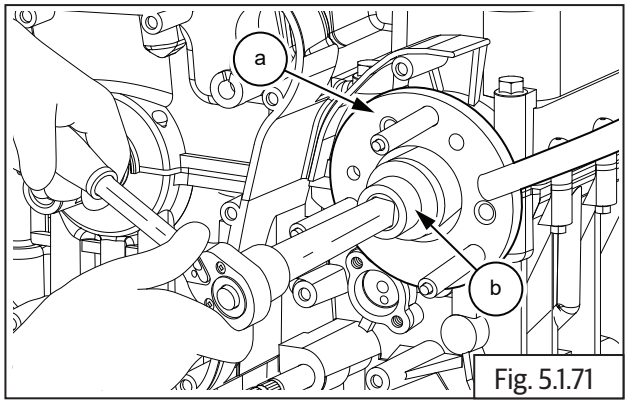

Fig. 5.1.71

SPL 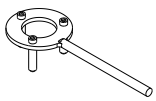	Part No: ST-27534-2
	Part Name: FD sprocket holder

	30 mm Socket with Ratchet

- Remove lock tab washer **(a)** from shaft.

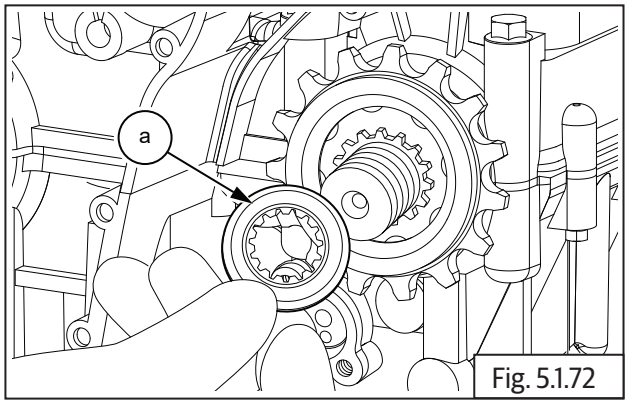

Fig. 5.1.72

- Remove FD sprocket **(a)** from drive shaft **(b)**.

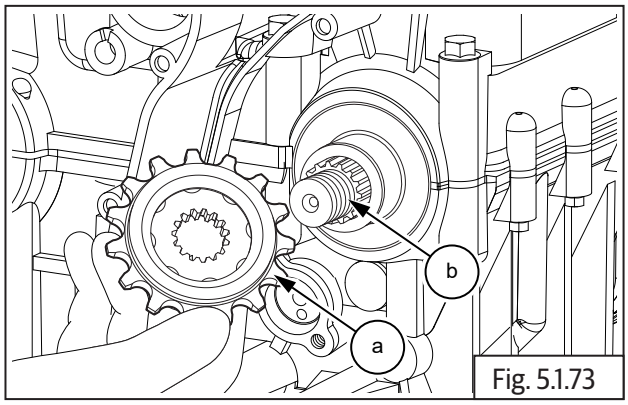

Fig. 5.1.73

- Gently remove spacer **(a)** from drive shaft.

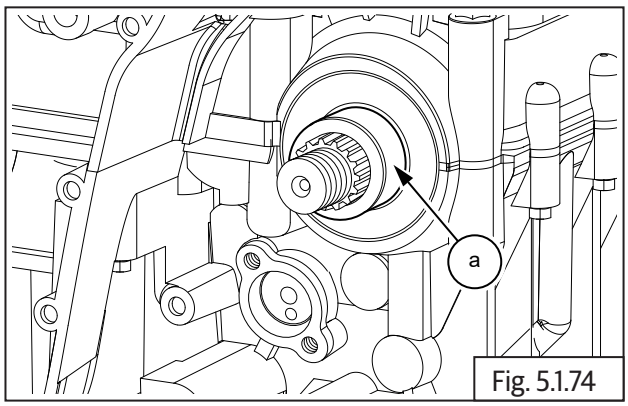

Fig. 5.1.74

- Remove oil seal **(a)** from drive shaft.

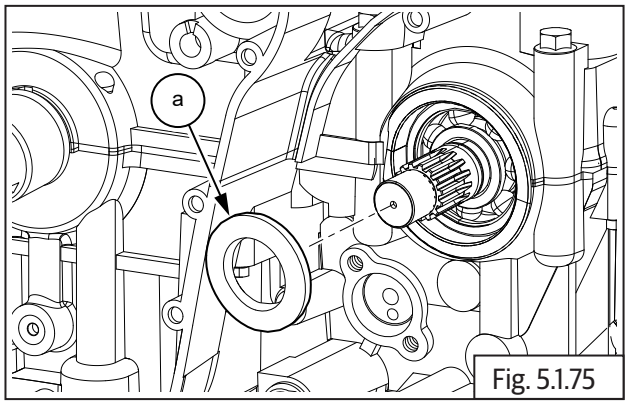

Fig. 5.1.75

5.1.27. Reed Valves

- Disconnect the hose **(a)** from the reed valve tube on the front side of cylinder head.

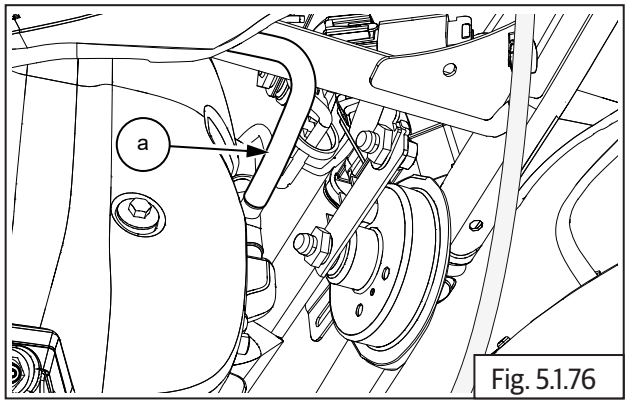

Fig. 5.1.76

- Loosen and remove 4 Nos. Hex socket head screws **(M6) (a)** holding reed valves to cylinder head.

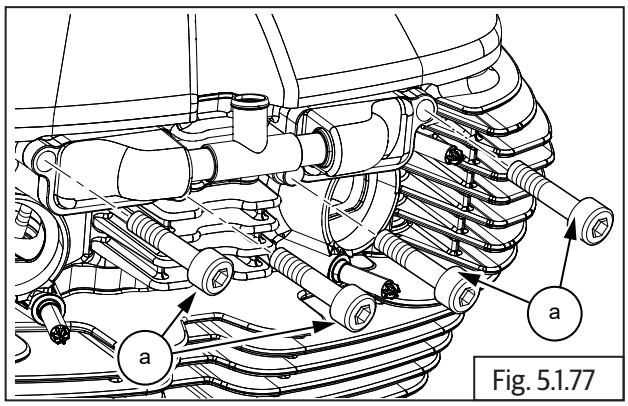

Fig. 5.1.77

	5 mm Allen Socket with Ratchet

- Remove reed valve **(a)** from the cylinder head.

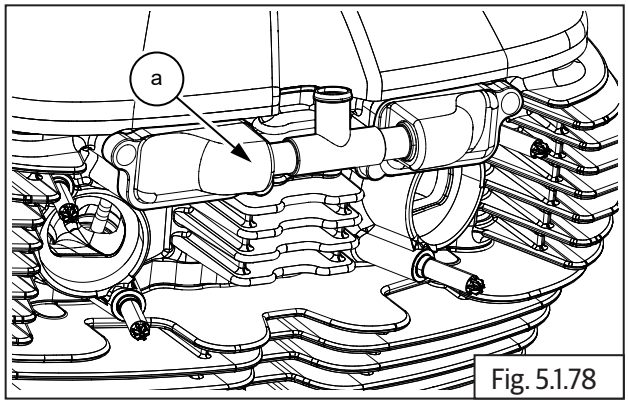

Fig. 5.1.78

5.1.28. Cylinder Head Cover

- Remove the following parts:
  - Side panels LH (section 6.7.4) and RH (section 6.7.1).
  - Rider seat assembly (section 6.7.2).
  - Fuel tank assembly. Ensure the fuel is drained completely (section 7.1.1).
- Loosen ABS modulator bracket and support it suitably above the frame (section 9.3.1).
- Remove Horn assembly (section 11.6).
- Loosen ignition coil from frame and support suitably (section 10.1.14).

⚠ WARNING

Gasoline is extremely flammable and highly explosive. Please handle with care. Improper handling can lead to fatal accident OR serious injury. Always drain/fill fuel only in a well ventilated area.

Ensure there is no scope for flames OR sparks near by while draining/filling fuel.

- Loosen and remove 4 Nos. Hex flange head bolts **(M5) (a)** in crisscross pattern along with the rubber seals and washers.

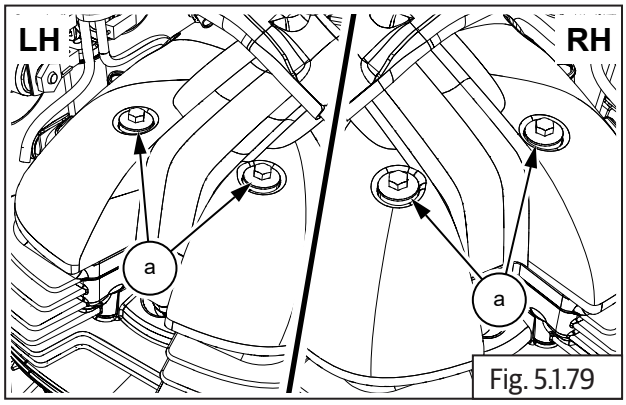

Fig. 5.1.79

	8 mm Socket with Ratchet

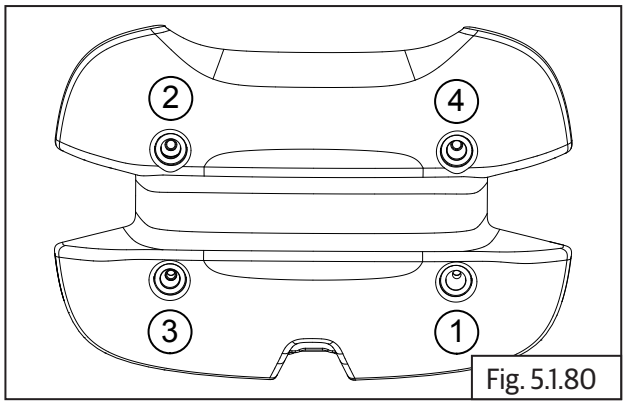

Fig. 5.1.80

- Gently remove rocker cover **(a)** from cylinder head **(b).**

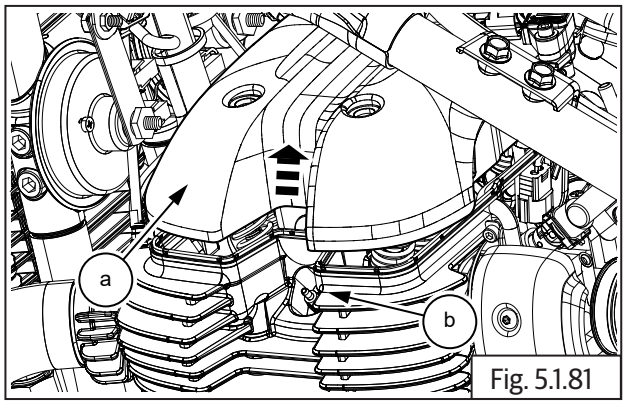

Fig. 5.1.81

- Remove rubber gasket **(a)** from rocker cover **(b)**.

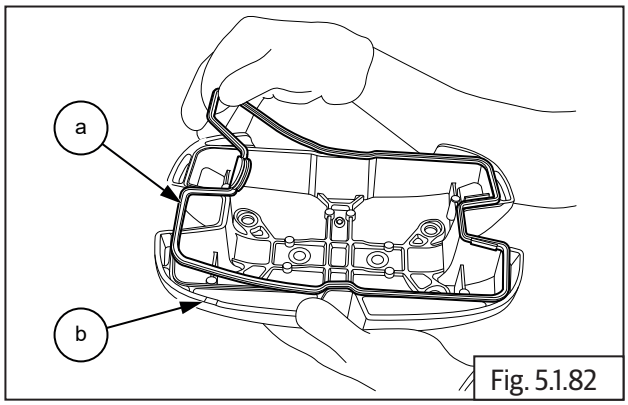

Fig. 5.1.82

5.1.29. Crankshaft Plug On Magneto Cover

- Remove crankshaft hole plug **(M34) (a)** from center of magneto cover **(b)**.

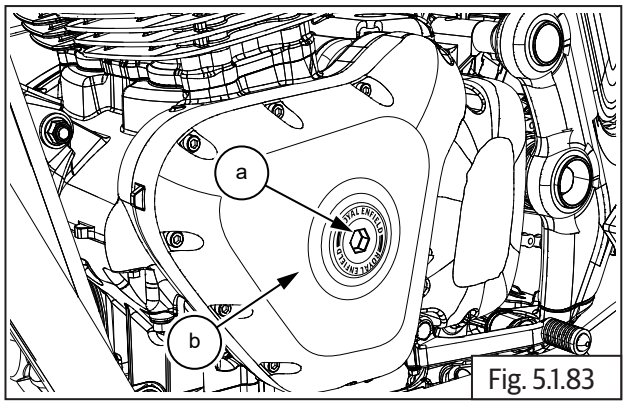

Fig. 5.1.83

	14 mm Allen Socket with Ratchet

- Remove O-ring **(a)** from crankshaft hole plug **(b)**.

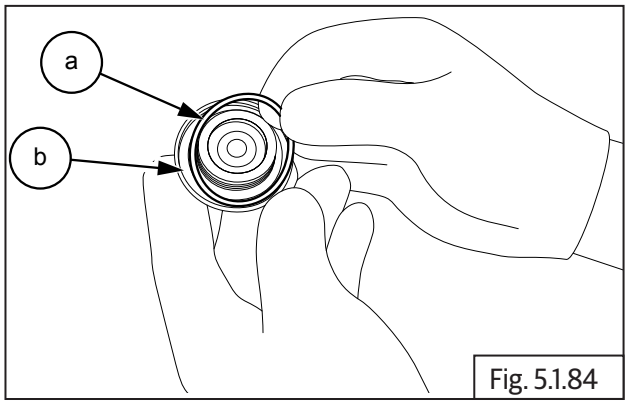

Fig. 5.1.84

5.1.30. Rocker Carrier LH from Cylinder Head

- Rotate the magneto rotor in clockwise direction and ensure reference mark "L" mark in camshaft is aligned with cylinder head on the LH side.

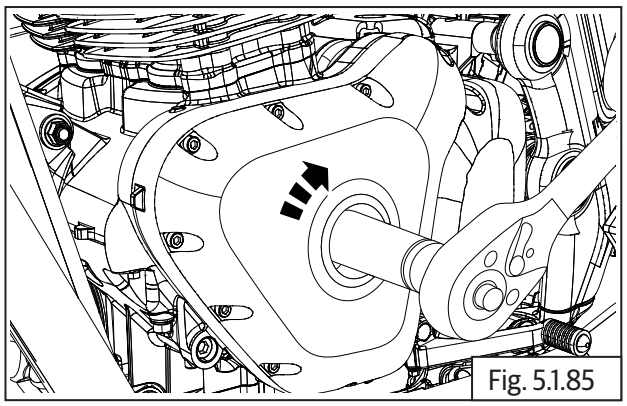
Fig. 5.1.85

	17 mm Socket with Ratchet

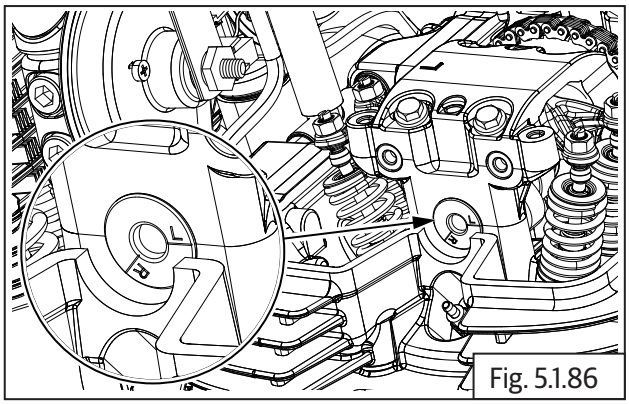
Fig. 5.1.86

- Loosen and remove 4 Nos. Hex flange head bolts **(M6) (a)** from rocker carrier LH.

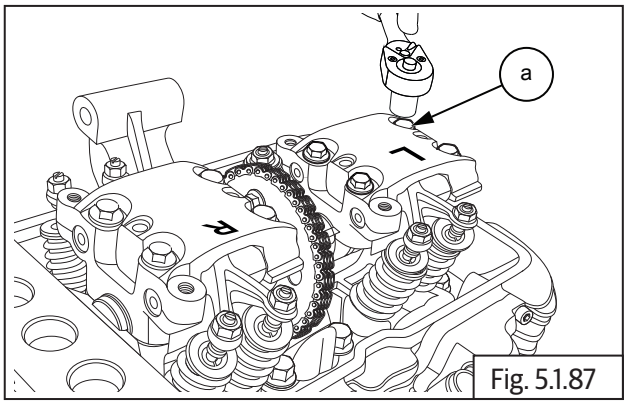

Fig. 5.1.87

	10 mm Socket with Ratchet

- Gently remove the rocker carrier LH **(a)** along with rocker arms from cylinder head.

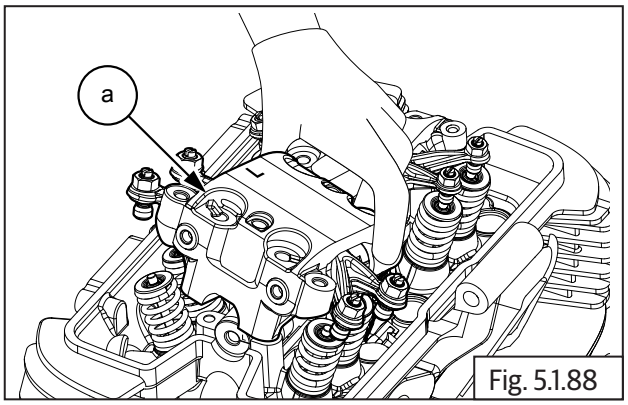

Fig. 5.1.88

- Thread in a suitable Hex flange bolt **(M6) (a)** into the rocker shaft and gently pull out the rocker shaft from rocker carrier LH **(b)**.
- Remove the rocker arms from carrier LH.

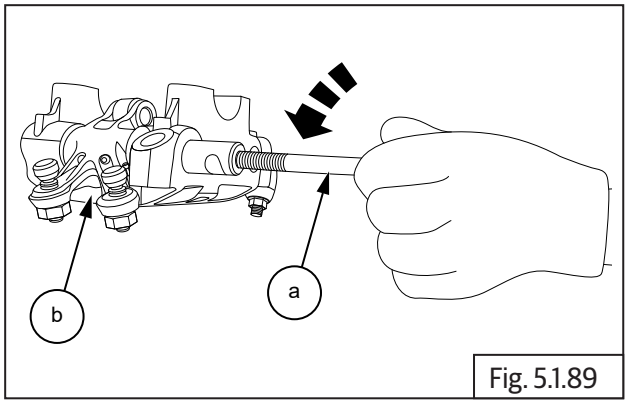

Fig. 5.1.89

5.1.31. Rocker Carrier RH from Cylinder Head

- Rotate magneto rotor **(a)** in clockwise direction and ensure reference mark "R" in camshaft **(a)** is aligned with cylinder head on the LH side.

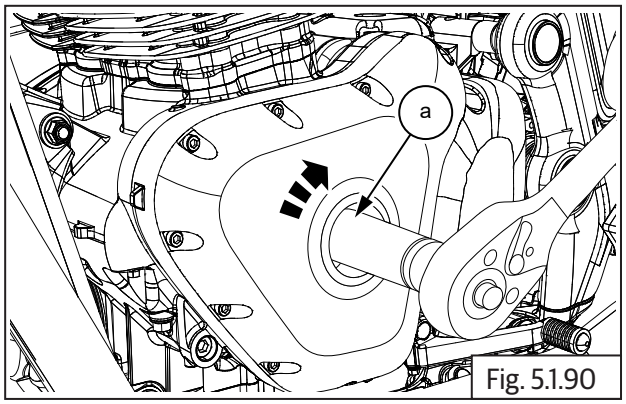

Fig. 5.1.90

	17 mm Socket with Ratchet

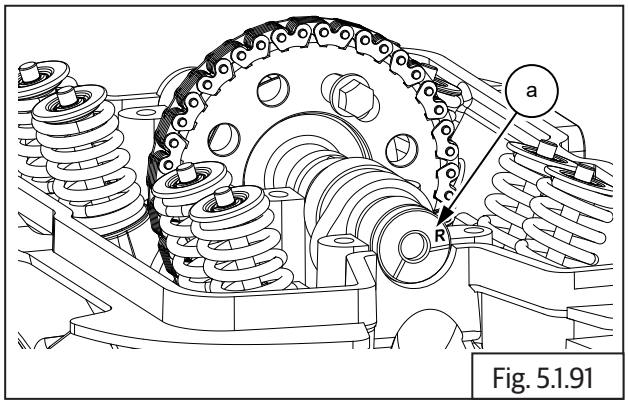

Fig. 5.1.91

- Loosen and remove 4 Nos. Hex head bolts **(M6) (a)** from rocker carrier RH and remove carrier along with rocker arms from cylinder head.

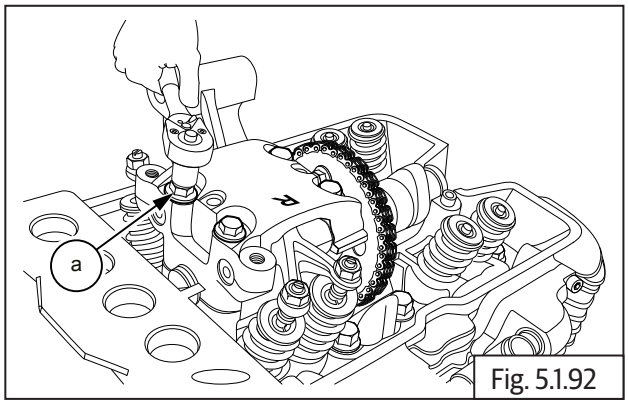

Fig. 5.1.92

	10 mm Socket with Ratchet

- Thread in a suitable Hex flange bolt **(M6) (a)** into the rocker shaft and gently pull out the rocker shaft from rocker carrier RH **(b)**.
- Remove the rocker arms from carrier RH.

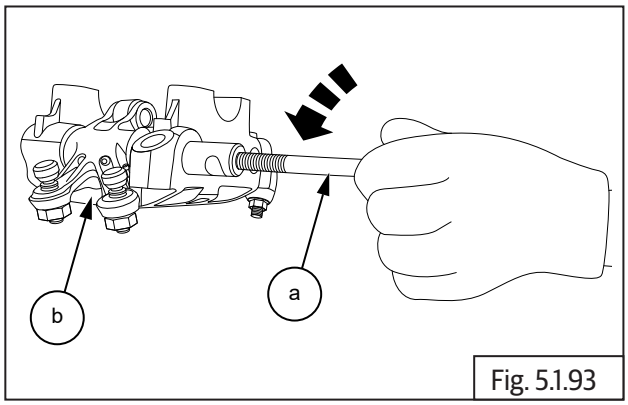

Fig. 5.1.93

5.1.32. Auto Chain Tensioner

- Loosen and remove Hex flange head bolt **(M6) (a)** from the auto chain tensioner.

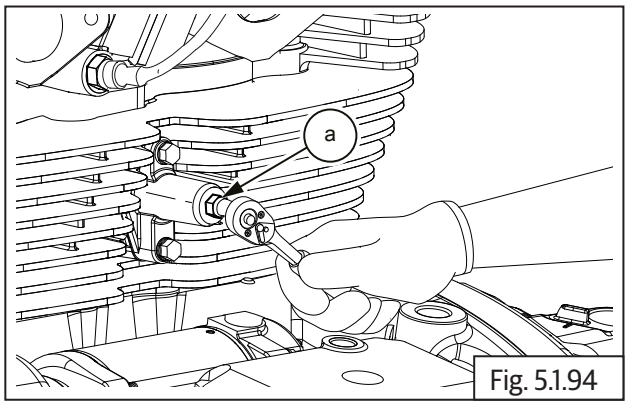

Fig. 5.1.94

	10 mm Socket with Ratchet

- Insert a small screw driver into chain tensioner and loosen until timing chain slack is at the maximum.

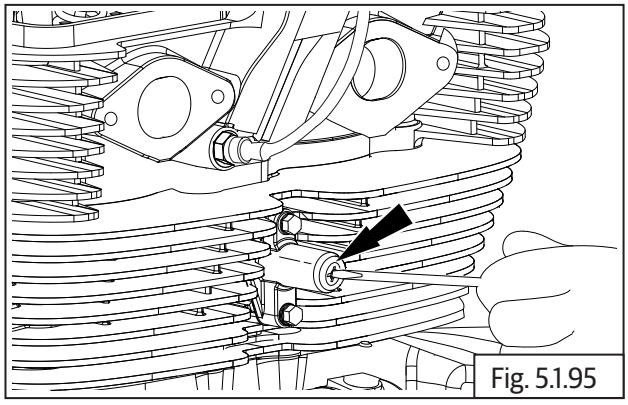

Fig. 5.1.95

	Screw driver

- Loosen and remove 2 Nos. Hex flange head bolts **(M6) (a)** to remove auto chain tensioner from cylinder barrel **(b)**.

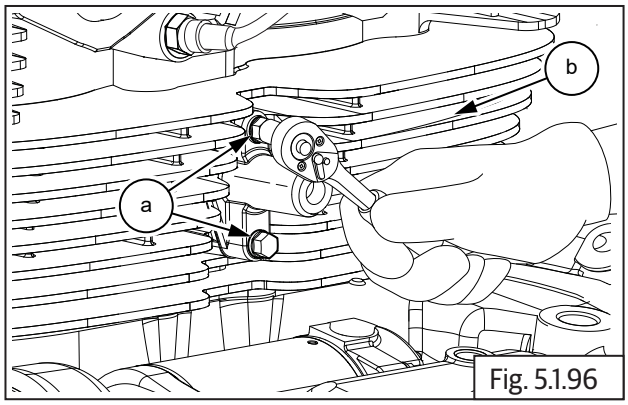

Fig. 5.1.96

	10 mm Socket with Ratchet

- Remove auto timing chain tensioner **(a)** from cylinder barrel along with gasket.

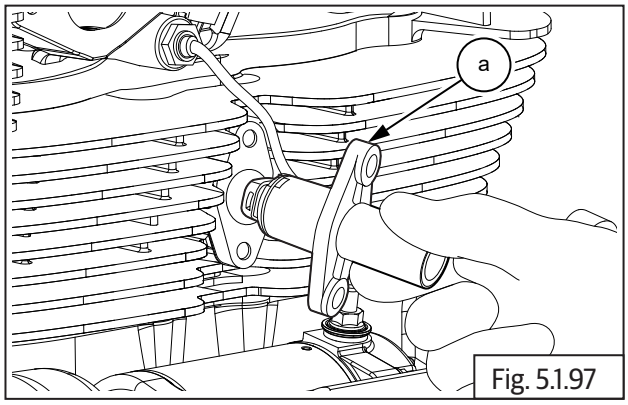

Fig. 5.1.97

5.1.33. Camshaft Sub Assembly

- Rotate magneto rotor **(a)** till one of Hex head bolts on cam chain sprocket appears at top most position.

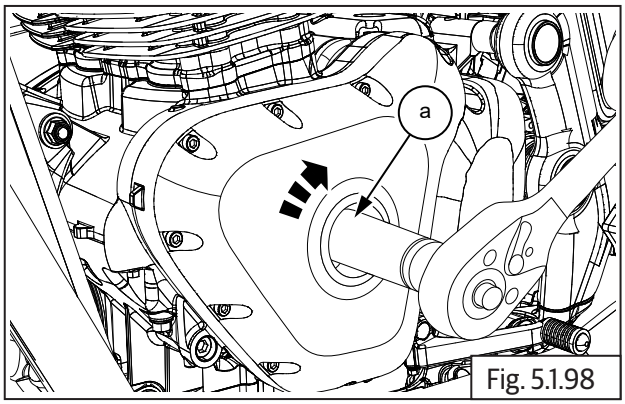

Fig. 5.1.98

	17 mm Socket with Ratchet

- Loosen and remove 1st Hex flange head bolt **(M8) (a)** from cam sprocket.

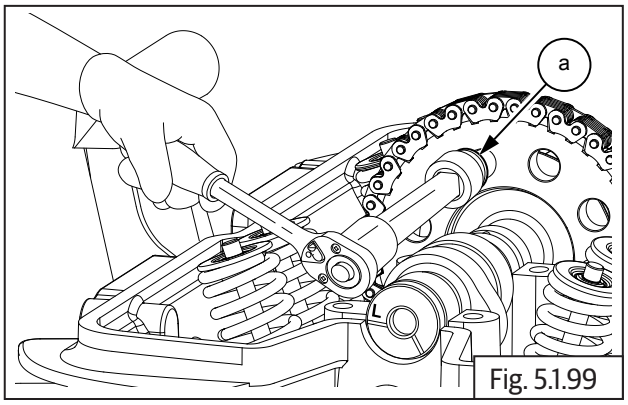

Fig. 5.1.99

	12 mm Socket with Ratchet

- Rotate magneto rotor **(a)** in clockwise direction till other bolt is visible at top most position.

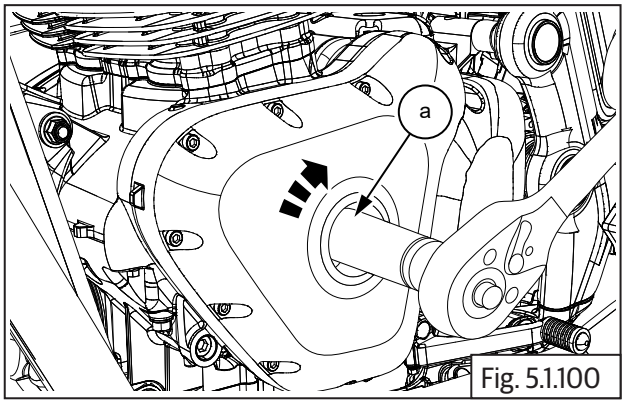

Fig. 5.1.100

	17 mm Socket with Ratchet

- Loosen and remove 2nd Hex head bolt **(M8) (a)** from cam sprocket.

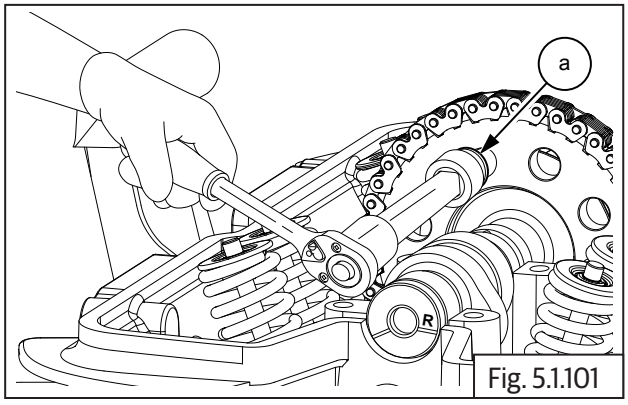

Fig. 5.1.101

	12 mm Socket with Ratchet

- Remove "C" washer **(a)** from groove in cylinder head LH to release cam shaft.

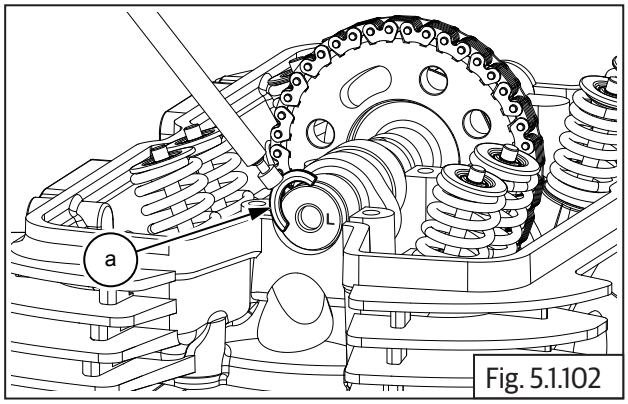

Fig. 5.1.102

	Magnetic stick

- Gently release the cam chain **(a)** from the cam sprocket **(b)**.

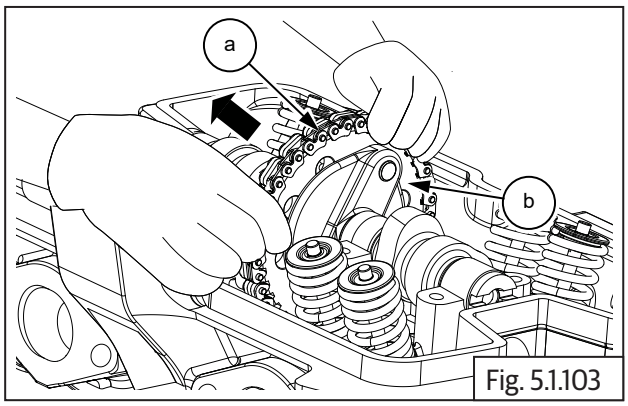

Fig. 5.1.103

- Gently lift camshaft with sprocket **(b)** and remove from cylinder head.
- Support cam chain **(a)** suitably while removing camshaft, to prevent it from falling into crankcase.

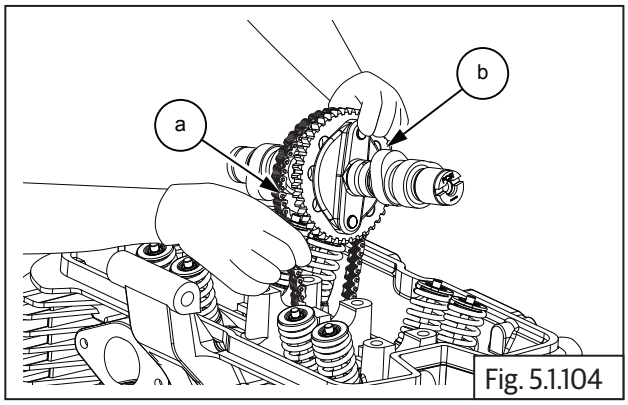

Fig. 5.1.104

- Remove sprocket **(a)** from camshaft.

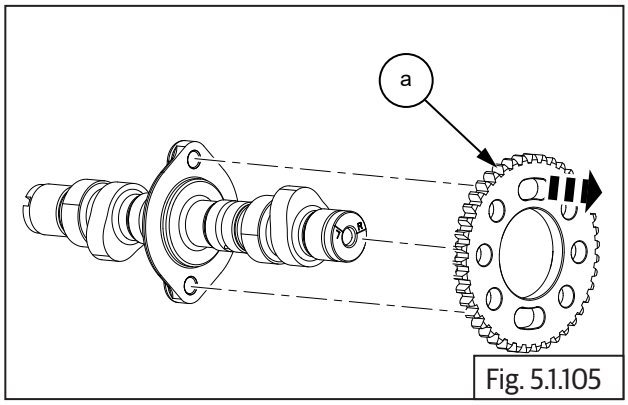

Fig. 5.1.105

5.1.34. Magneto Cover

- Loosen and remove 12 Nos. Hex socket head bolts **(M6) (a)** in crisscross pattern to remove magneto cover **(b)** from crankcase on LH side.

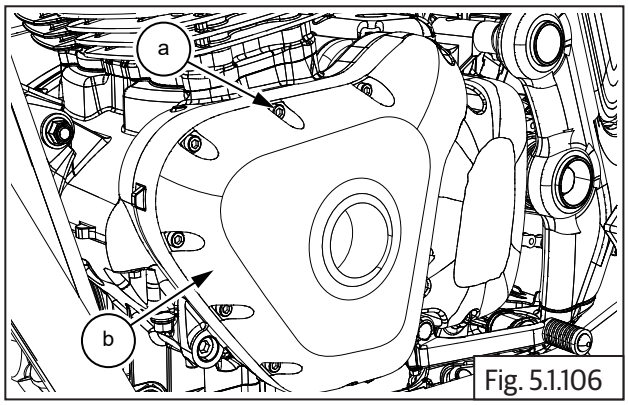

Fig. 5.1.106

	5 mm Allen socket with Ratchet

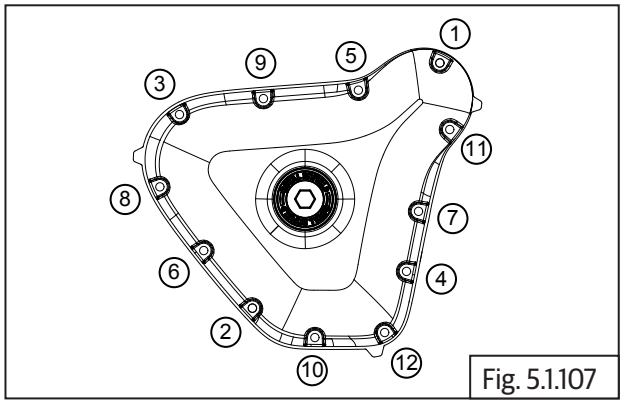

Fig. 5.1.107

- The magneto cover may be hard to remove from crankcase, due to the magnetic force from the magneto acting on the stator coil.
- Gently tap on the tabs **(a)** with a plastic / rubber mallet, on the inside edges of the magneto cover, to remove.

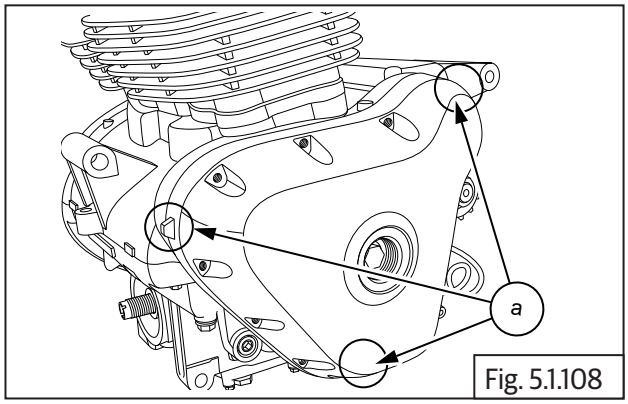

Fig. 5.1.108

	Plastic/Rubber mallet

- Remove the 2 Nos. dowel pins **(a)** and **(b)** from the crankcases/magneto cover.

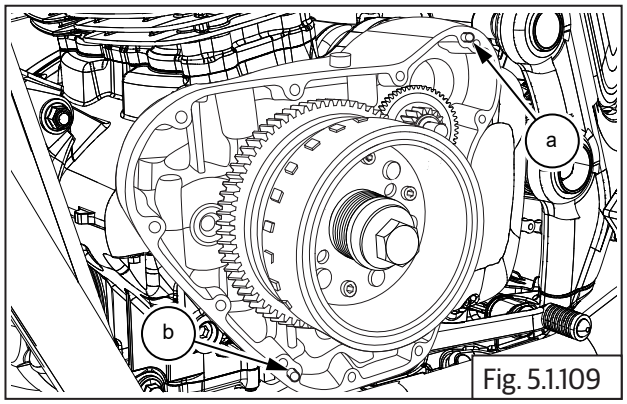

Fig. 5.1.109

- Remove gasket **(a)**.

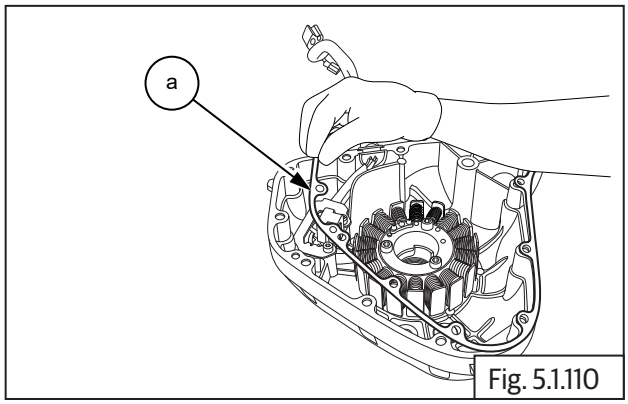

Fig. 5.1.110

⚠ CAUTION

Do not use a sharp tool to scrap the gasket material from the joint faces.

If required scrap only with a soft and blunt tool.

5.1.35. Stator Assembly with CPS

Stator Assembly with Crank Position Sensor

- Loosen and remove 3 Nos. Hex socket head screws **(M6) (a)** holding the stator assembly **(b)**.

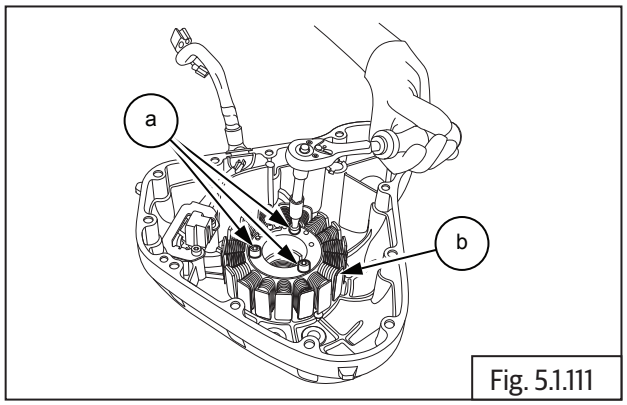

Fig. 5.1.111

	5 mm Allen socket with Ratchet

- Loosen and remove 2 Nos. Hex socket head screws **(M6) (a)** on guide plate **(b)** holding crank position sensor to magneto cover.

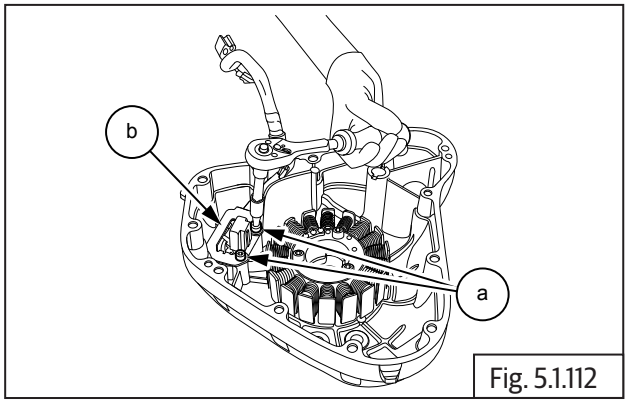

Fig. 5.1.112

	5 mm Allen socket with Ratchet

- Remove guide plate **(a)** from magneto cover sub assembly.

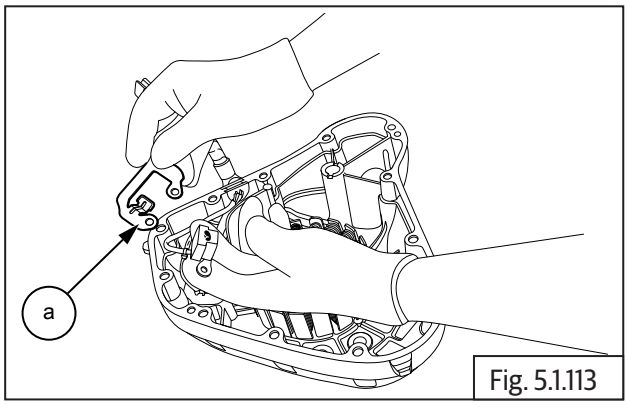

Fig. 5.1.113

- Gently release wiring grommet **(a)** from magneto cover.
- Gently remove stator assembly **(b)** from magneto cover.

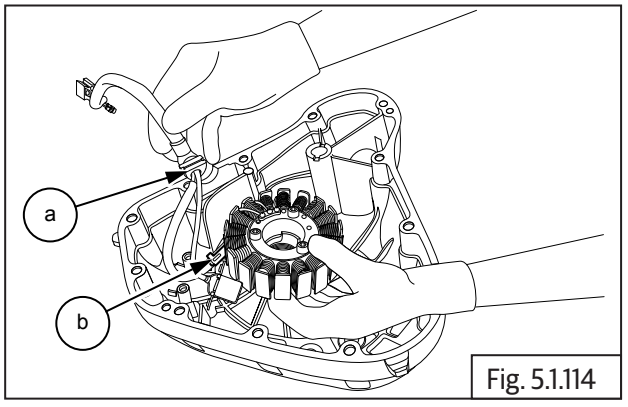

Fig. 5.1.114

5.1.36. Magneto Rotor Bolt

- In order to loosen magneto rotor bolt, it will be necessary to remove clutch cover Refer (Section 5.1.16).
- Ensure LH piston is at TDC on compression stroke.
- Insert special tool **(a)** in crankcase RH to lock the crankshaft and prevent rotation.

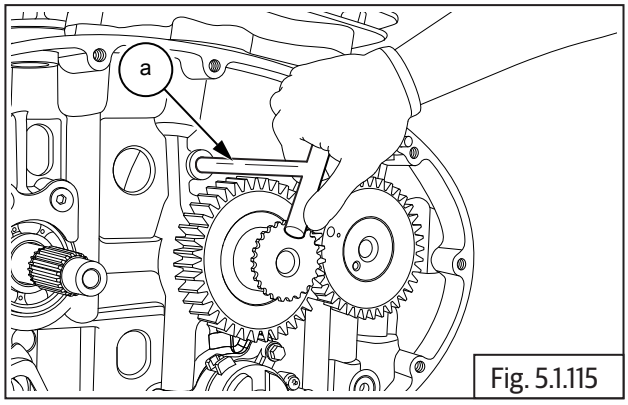

Fig. 5.1.115

SPL	Part No: ST-27533-2
	Part Name: Magneto and Clutch locking tool

- Loosen and remove Hex flange head bolt **(M12) (a)**.

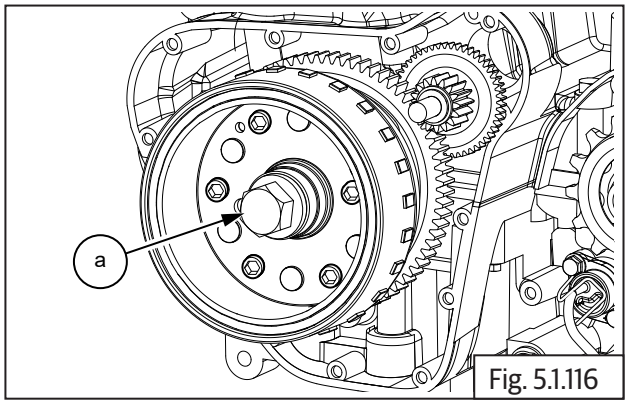

Fig. 5.1.116

	17 mm Socket with Ratchet

- Ensure center bolt of magneto rotor puller is loosened sufficiently.
- Assemble puller **(b)** on magneto rotor **(a)** and thread it in fully.
- Tighten center bolt onto puller till magneto rotor gets released from crankshaft.

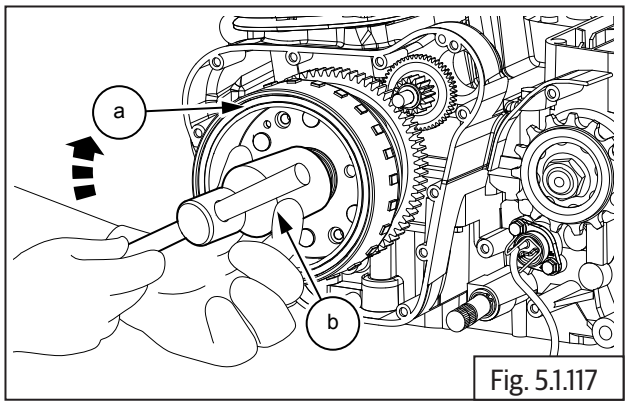

Fig. 5.1.117

SPL	Part No: ST30274/a
	Part Name: Magneto Puller Assembly

- Gently pull out magneto rotor assembly **(a)** with starter clutch.

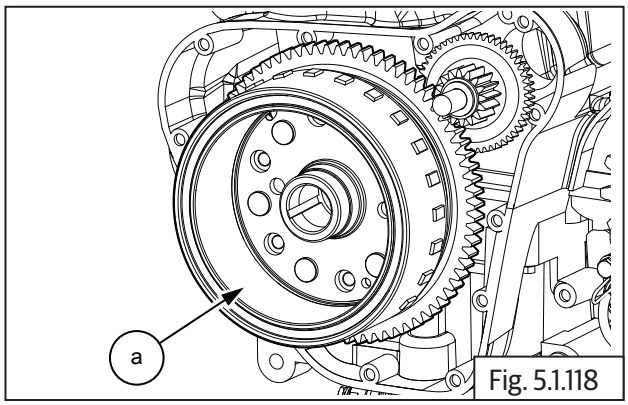

Fig. 5.1.118

- Remove woodruff key **(a)** from crankshaft.

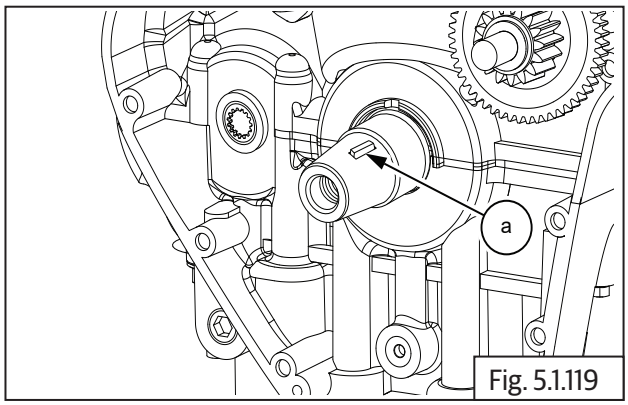

Fig. 5.1.119

5.1.37. Starter Clutch from Magneto Rotor

- Slightly loosen 6 Nos. Hex socket head screws **(M6) (a)** from inside magneto rotor. **DO NOT LOOSEN AND REMOVE FULLY**.

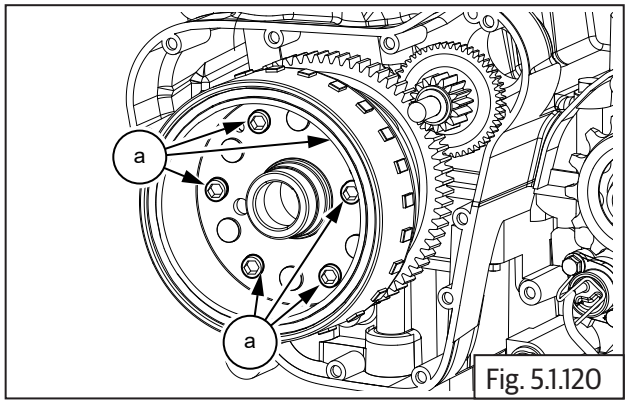

Fig. 5.1.120

	5 mm Allen socket with Ratchet

- Remove magneto rotor assembly **(a)** from carnk shaft, hold the rotor firmly, rotate gear starter clutch **(b)** anti-clockwise and pull out simultaneously to separate rotor from the gear.

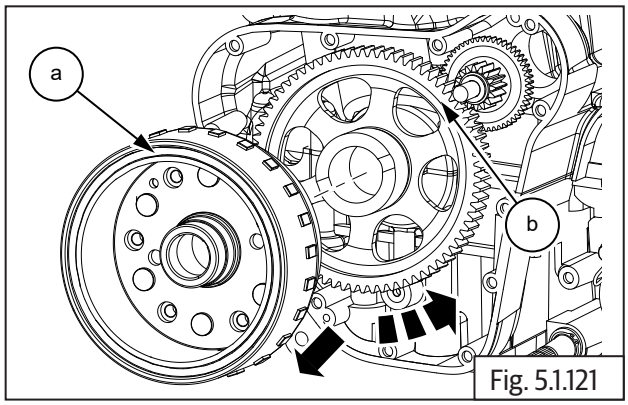

Fig. 5.1.121

- Remove starter idle gear **(a)**.

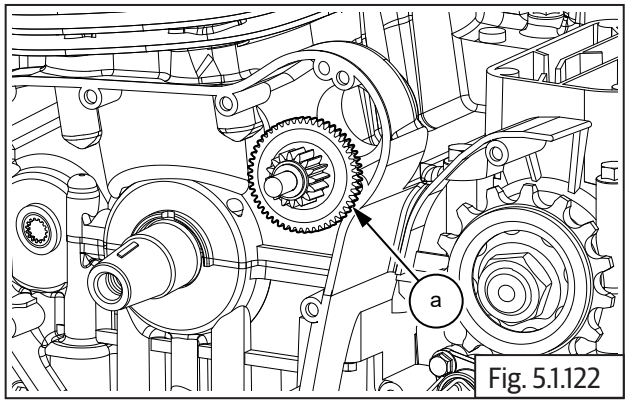

Fig. 5.1.122

- Loosen and remove 6 Nos. Hex socket head screws **(M6) (a)** from inside magneto rotor **(b)** and separate one way clutch with outer ring **(c)**.
- Remove one way clutch from outer ring.

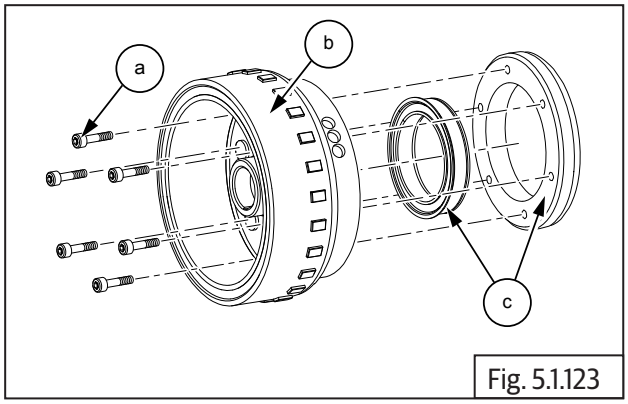

Fig. 5.1.123

	5 mm Allen socket with Ratchet

5.1.38. Cylinder Head

- Remove exhaust pipe and silencers LH and RH (section 6.4.2).
- Loosen and remove 8 Nos. Hex head long bolts **(M10) (a)** in crisscross pattern on cylinder head.

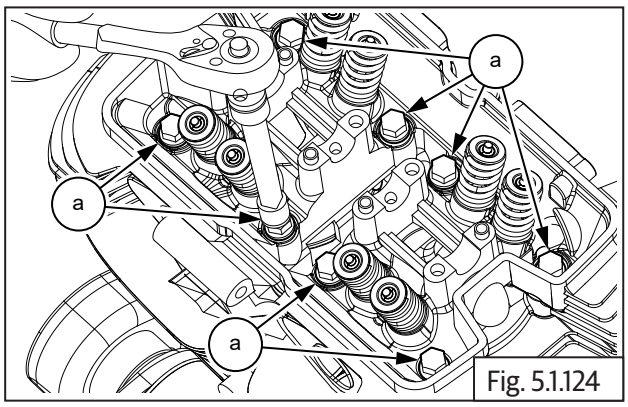

Fig. 5.1.124

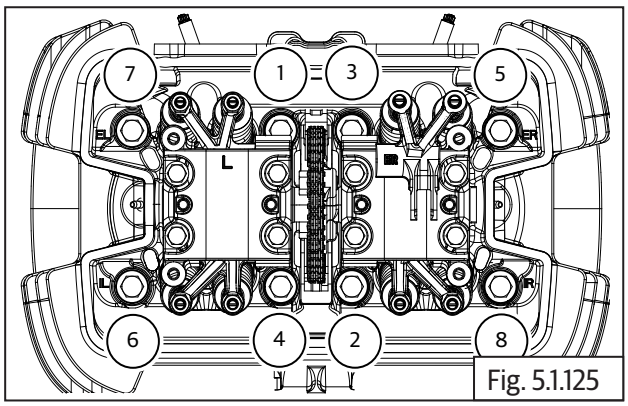

Fig. 5.1.125

	14 mm Socket with Ratchet

- Support cam chain suitably and gently remove cylinder head **(a)** from cylinder barrel **(b)**.

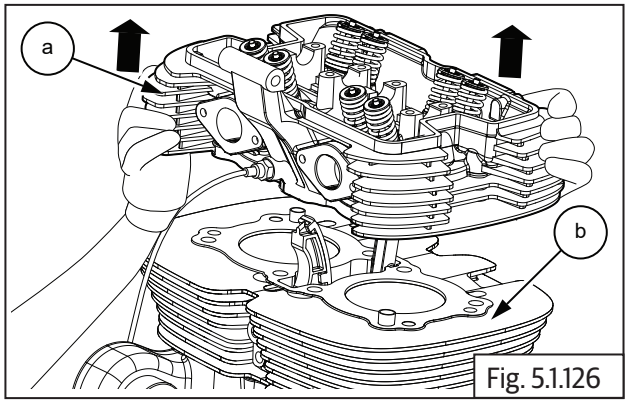

Fig. 5.1.126

- Remove the cylinder head gasket **(a)** from cylinder barrel **(b)**.

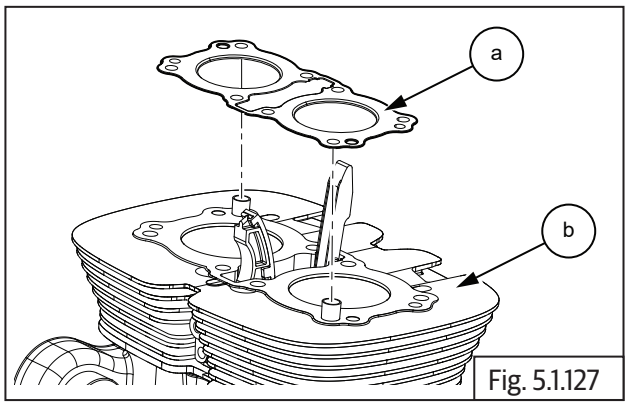

Fig. 5.1.127

5.1.39. Components from Cylinder Head

Valves and Springs

- Compress valve spring with special tool **(a).**

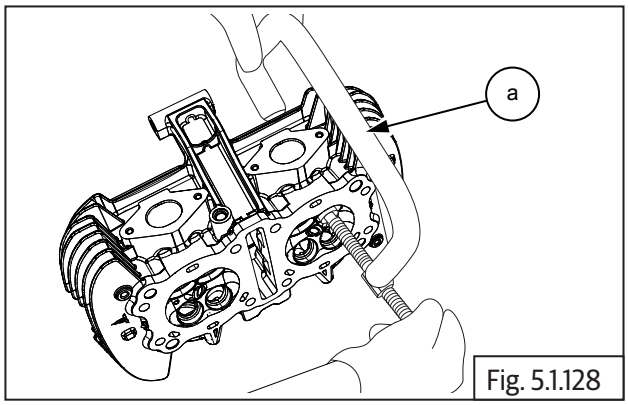

Fig. 5.1.128

SPL	Part No: ST-27528-2
	Part Name: Valve spring compressor

- Remove the cotters **(a)** on valve stem at the top.

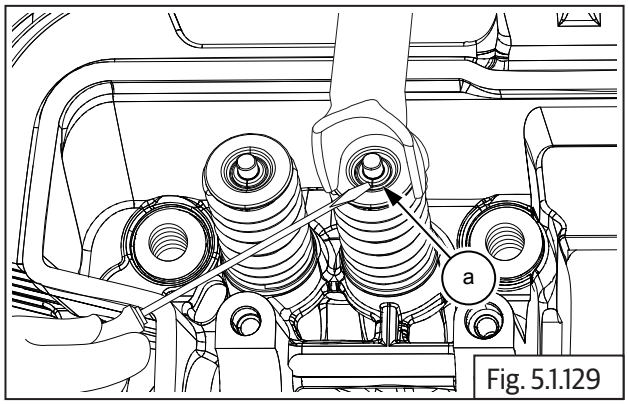

Fig. 5.1.129

SPL	Part No: ST-27528-2
	Part Name: Valve spring compressor

- Gently loosen the screw on valve spring compressor, till the valve spring tension is completely released and remove the special tool.

⚠ CAUTION

Valve spring under high tension when compressed.

Release valve spring compressor tool slowly and with care.

- Remove the retainer, valve spring **(a)** form the top of the valve spring **(b)**.

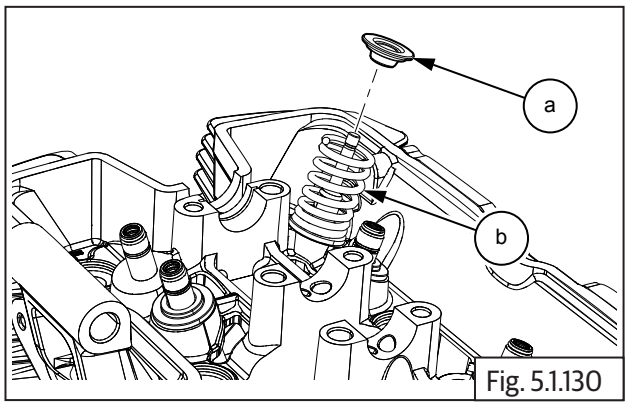

Fig. 5.1.130

- Remove valve spring **(a)** from valve stem **(b)**.

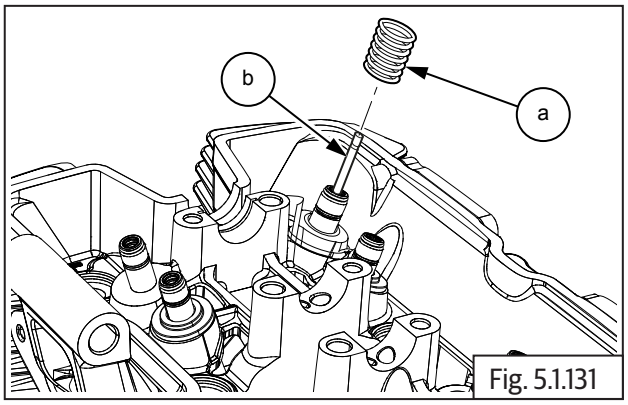

Fig. 5.1.131

- Remove valve **(a)** from cylinder head **(b)** by pulling it out from the cylinder head inside.

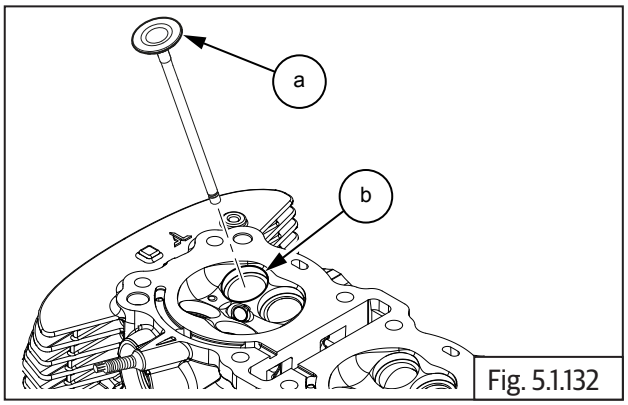

Fig. 5.1.132

- Remove valve stem seal **(a)** from valve guide **(b)**.

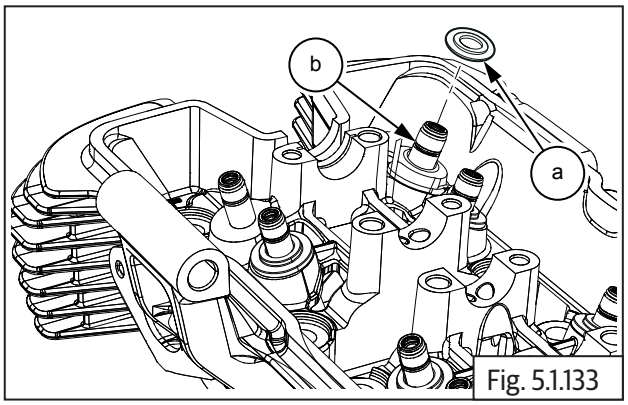

Fig. 5.1.133

- Follow the same procedure to remove the other valves from the cylinder head.

5.1.40. Floating Chain Pad

- Remove the floating chain pad **(a)** from front end of the cylinder barrel.

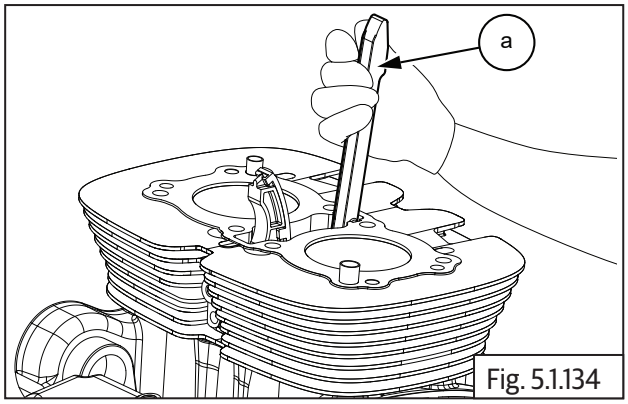

Fig. 5.1.134

5.1.41. Cylinder Barrel

- Support cam chain suitably.
- Gently remove cylinder barrel **(a)** from crankcase **(b)**.

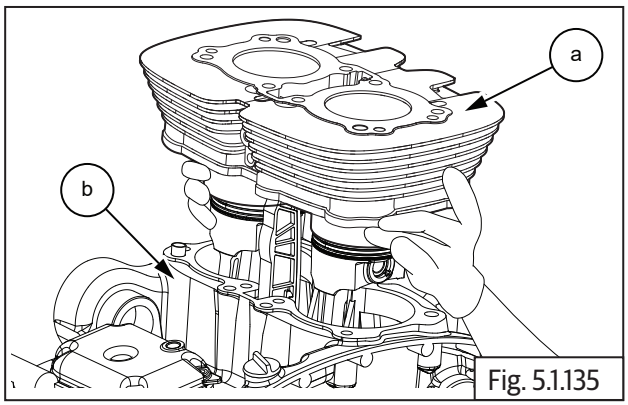

Fig. 5.1.135

5.1.42. Pistons

- Remove the circlip **(a)** from outer side of piston RH.

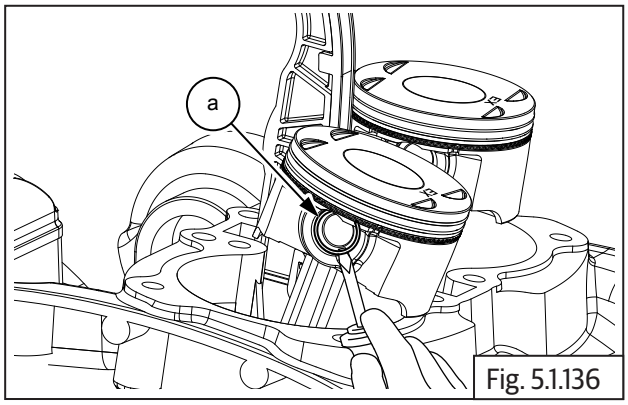

Fig. 5.1.136

	Screw driver

- Gently push out gudgeon pin **(a)** from inner side of piston RH and ensure it has completely come out of the connecting rod, to release piston RH from the connecting rod.

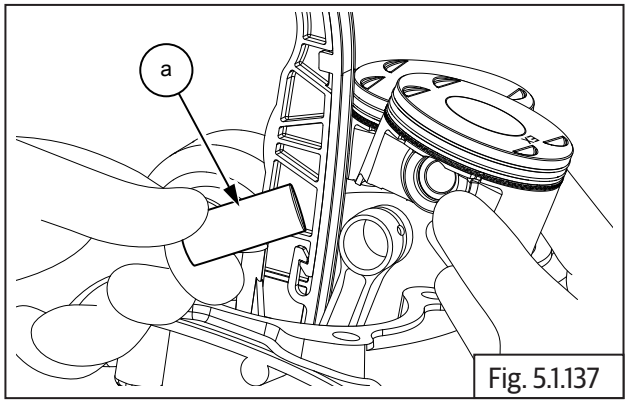

Fig. 5.1.137

- Repeat above procedure for removing piston LH.

5.1.43. Oil Pressure Switch

- Ensure engine oil is drained completely.
- Loosen and remove pressure switch **(a)** along with washers **(b)** from bottom of the crankcase RH.

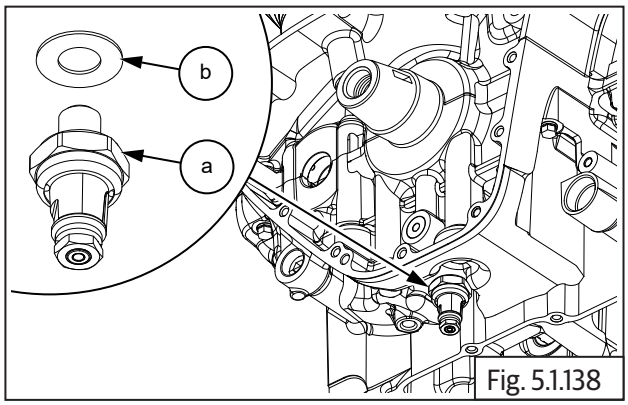

Fig. 5.1.138

	21 mm Socket with Ratchet

5.1.44. Oil Pan

- Loosen and remove the 13 Nos. Hex bolts **(M6) (a)** in crisscross pattern from sump.

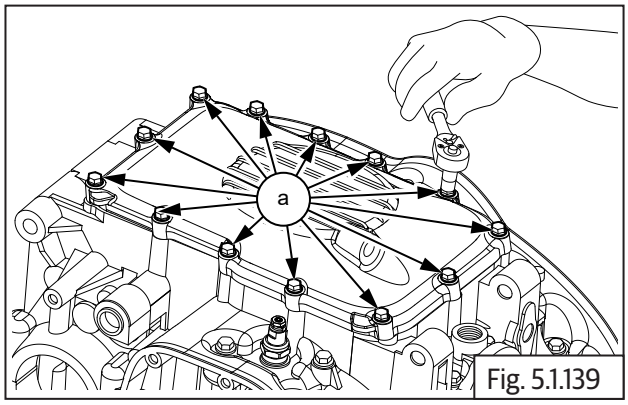

Fig. 5.1.139

	10 mm Socket with Ratchet

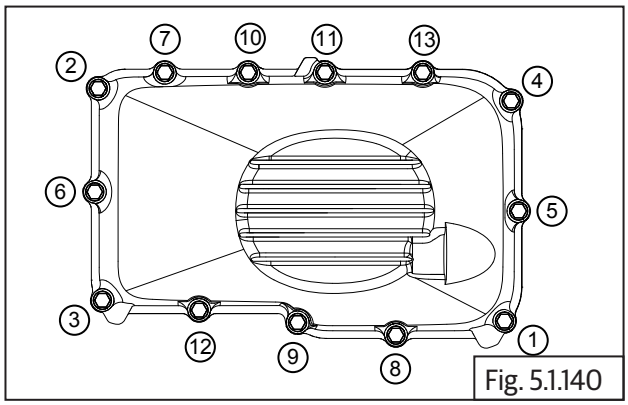

Fig. 5.1.140

- Remove sump cover **(a)** along with gasket **(b)** from bottom crankcase.

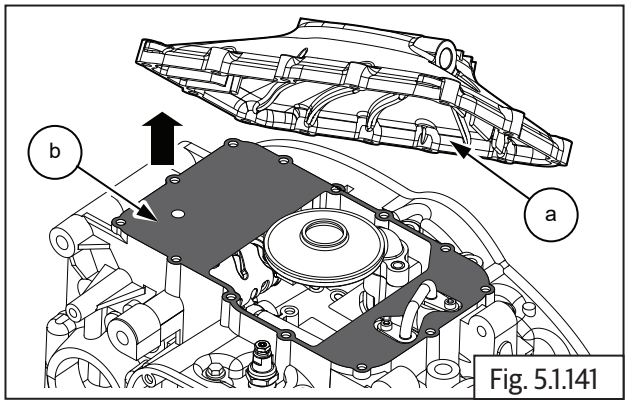

Fig. 5.1.141

5.1.45. Oil Strainer

- Loosen and remove 2 Nos. Hex flange head bolts **(M6) (a)** to remove oil strainer **(b)** along with O-ring **(c)**.

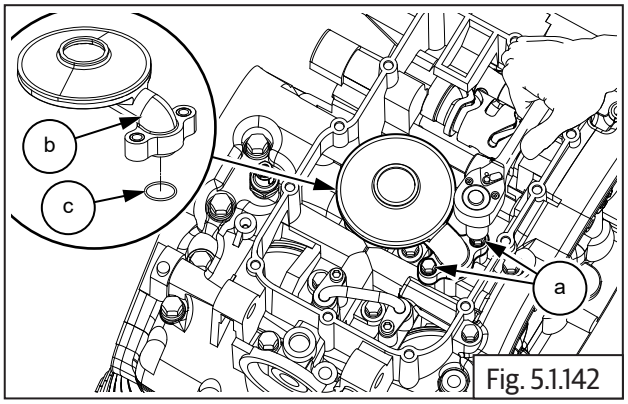

Fig. 5.1.142

	10 mm Socket with Ratchet

⚠ CAUTION

DO NOT reuse O-ring. Always use new O-ring during installation

5.1.46. Oil Bypass

- Loosen and remove pan head screw **(M6) (a)** to remove bypass **(b)** from crankcase.

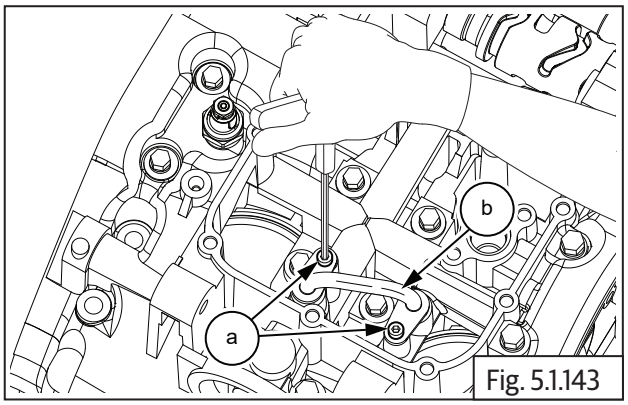

Fig. 5.1.143

	5 mm Allen key

COMPONENTS THAT CAN BE ASSEMBLED ON ENGINE WITHOUT REMOVING FROM FRAME

CONTENTS PAGE

5.2 Components Assembly on Engine 81

5.2.1. Oil Bypass 81

5.2.2. Oil Strainer 81

5.2.3. Oil Pan 81

5.2.4. Oil Pressure Switch 82

5.2.5. Drain Plug 82

5.2.6. Oil Filter 82

5.2.7. Piston Rings on Piston 83

5.2.8. Pistons on Connecting Rods 84

5.2.9. Cylinder Barrel Dowels on Crankcase 84

5.2.10. Cylinder Barrel Gasket on Crankcase 85

5.2.11. Piston LH in Cylinder Barrel 85

5.2.12. Piston RH in Cylinder Barrel 86

5.2.13. Cylinder Head Gasket on Cylinder Barrel 87

5.2.14. Floating Chain Pad 87

5.2.15. Components in Cylinder Head 87

5.2.16. Cylinder Head on Cylinder Barrel 89

5.2.17. Starter Clutch to Magneto Rotor 90

5.2.18. Idle Gear in Crankcase LH 90

5.2.19. Woodruff Key on Crankshaft 90

5.2.20. Magneto Rotor on Crankshaft 91

5.2.21. Camshaft Sub Assembly 91

5.2.22. Timing Chain Tensioner 94

5.2.23. Rocker Arms in Carriers LH and RH 95

5.2.24. Rocker Carrier on Cylinder Head LH 96

5.2.25. Rocker Carrier on Cylinder Head RH 97

5.2.26. Tappet Clearance Adjustment 98

5.2.27. Cover Cylinder Head 100

5.2.28. Reed Valves 101

5.2.29. Reed Valve Connection 101

5.2.30. Inlet Manifold Rubber Flanges LH & RH 101

5.2.31. Throttle Body 102

CONTENTS PAGE

5.2.32. Air Filter Hoses On Throttle Body 102
5.2.33. Throttle Cables 103
5.2.34. Injector, TPS, MAPS, ISC Connections 103
5.2.35. Throttle Body Covers on LH and RH 104
5.2.36. Spark Plugs 104
5.2.37. Spark Plug Suppressor Caps 104
5.2.38. Star Index 105
5.2.39. Star Index Stopper 105
5.2.40. Shifter Selector Shaft 107
5.2.41. Oil Pump 109
5.2.42. Clutch Assembly 109
5.2.43. Oil Level Window on Clutch Cover 113
5.2.44. Clutch Actuating Lever Assembly 113
5.2.45. Clutch Cover 114
5.2.46. Arm Clutch Actuating Lever 115
5.2.47. Clutch Cable on Clutch cover 115
5.2.48. FD Sprocket 116
5.2.49. Rear Chain to FD Sprocket 117
5.2.50. Gear Position Sensor (GPS) 117
5.2.51. Magneto Cover Sub Assembly 118
5.2.52. Magneto Cover on Crankcase 118
5.2.53. Magneto / Gear position switch wiring couplers 119
5.2.54. FD Sprocket Cover 120
5.2.55. Gear Shift Linkage 120
5.2.56. Starter Motor 120
5.2.57. Starter Motor Connections 121
5.2.58. Breather Box 121
5.2.59. Breather Hose Connections 121
5.2.60. Engine Oil Filling 122

5.2 Components Assembly on Engine

5.2.1. Oil Bypass

- Ensure O-rings **(a)** are located properly.
- Install oil bypass pipe **(b)** into lower crankcase oil gallery.

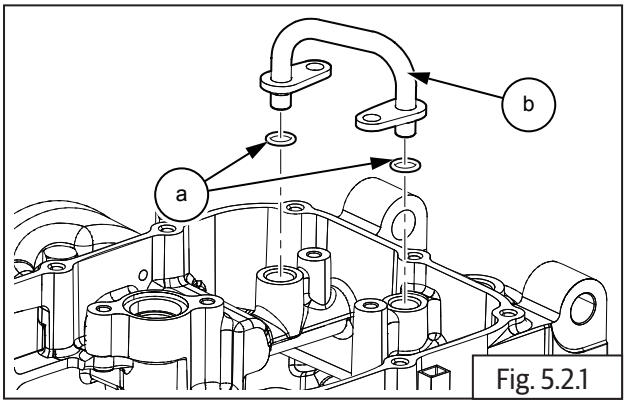

Fig. 5.2.1

- Tighten 2 Nos. Hex socket head screw **(M6) (a)** to specified torque.

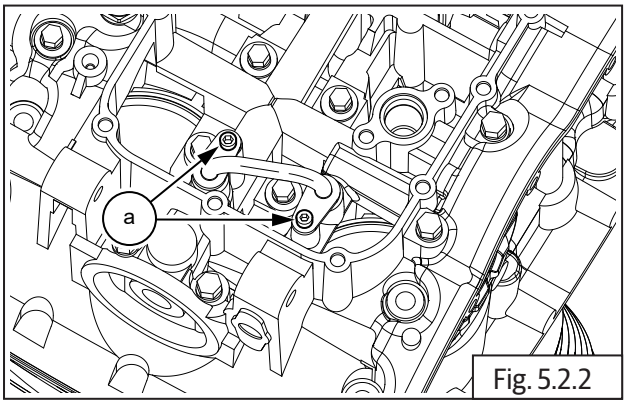

Fig. 5.2.2

	5 mm Allen socket with Ratchet
Torque	12 N-m/1.2 kgf-m

5.2.2. Oil Strainer

- Ensure O-ring is located properly.
- Install oil strainer **(a)** into lower crankcase oil gallery and tighten with 2 Nos. Hex flange head bolts **(M6) (b)** to specified torque.

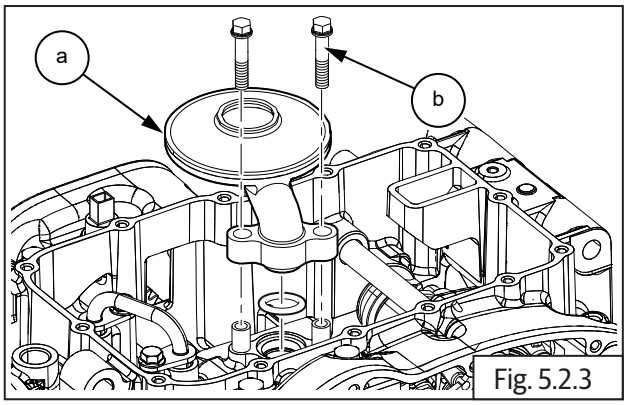

Fig. 5.2.3

	10 mm Socket with Ratchet
Torque	12 N-m/1.2 kgf-m

5.2.3. Oil Pan

- Locate oil pan gasket **(a)** on crankcase and assemble oil pan **(b)**.

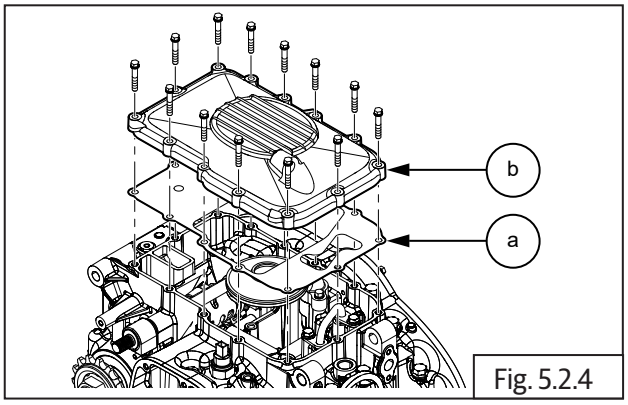

Fig. 5.2.4

- Assemble and tighten 13 Nos. Hex flange head bolts **(M6) (a)** in crisscross pattern to specified torque.

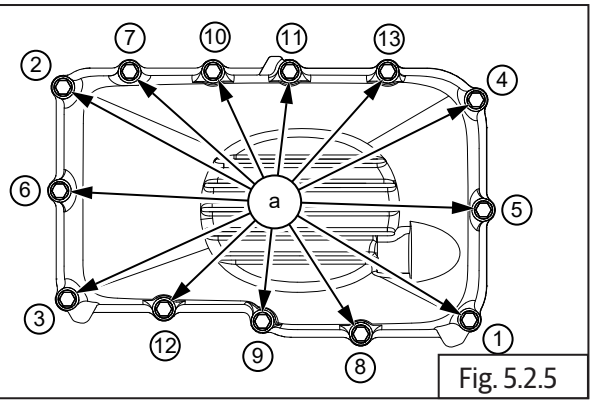

Fig. 5.2.5

	10 mm Socket with Ratchet
Torque	12 N-m/1.2 kgf-m

5.2.4. Oil Pressure Switch

- Assemble oil pressure switch **(a)** along with washer **(b)** on crankcase.

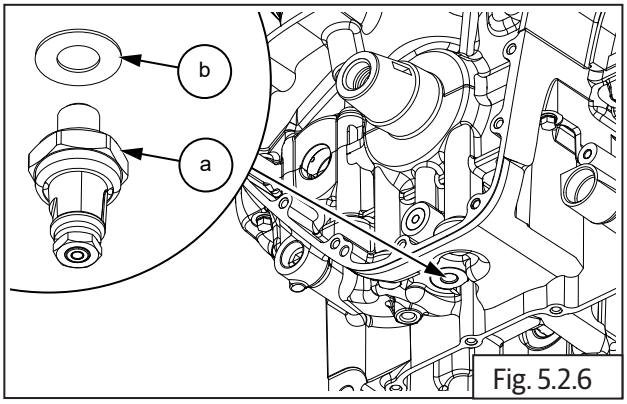

Fig. 5.2.6

- Tighten oil pressure switch **(a)** to specified torque.

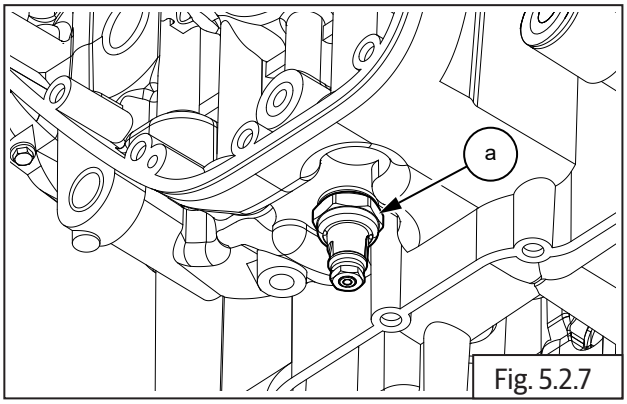

Fig. 5.2.7

	21 mm Socket with Torque wrench
Torque	12 N-m/1.2 kgf-m

5.2.5. Drain Plug

- Assemble magnetic drain plug **(M14) (a)** with new washer **(b)** on the front end of the oil sump at the bottom of the engine.

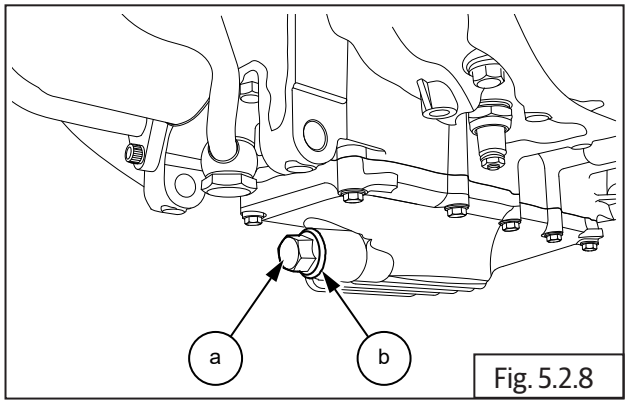

Fig. 5.2.8

- Tighten drain plug **(a)** to specified torque.

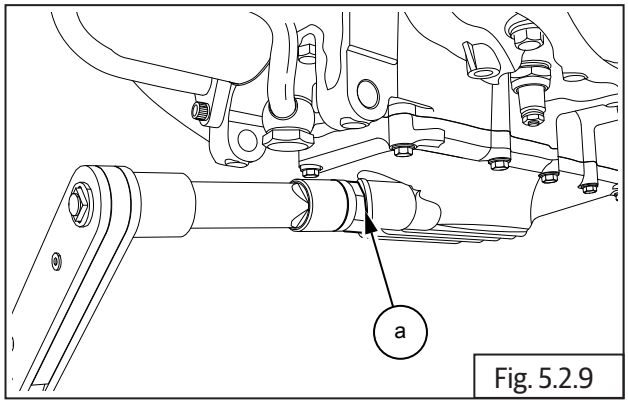

Fig. 5.2.9

	19mm Socket with Torque wrench
Torque	35 N-m/3.5 kgf-m

5.2.6. Oil Filter

- Ensure O-ring **(a)** is seated properly over oil filter.
- Apply thin layer of fresh engine oil over O-ring.
- Locate oil filter **(b)** on the threaded stud **(c)** in the front of the engine.

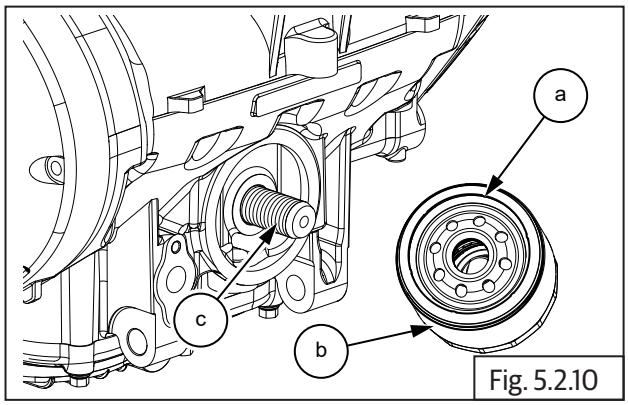

Fig. 5.2.10

- Tighten oil filter **(a)** using special tool **(b)** to specified torque.

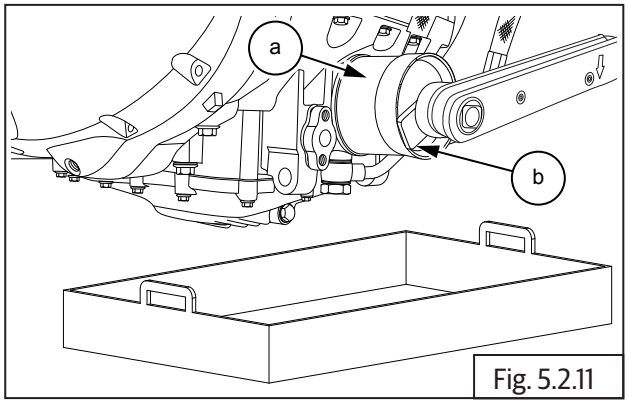

Fig. 5.2.11

SPL 	Part No: ST30294/a
	Part Name: Oil Filter wrench with Torque wrench
Torque	20 N-m/2 kgf-m

5.2.7. Piston Rings on Piston

NOTE

- *Rings should be assembled with proper orientation (top marking should be always towards 1st ring end gap should be 45° before "EX" mark on piston crown).*
- *Middle 2nd ring end gap should be 180° from 1st ring end gap.*
- *Oil ring 3rd top rail end gap should be 180° from 2nd ring end gap (45° before "EX" on piston crown).*
- *Oil ring spacer end gap should be 45° before 3rd ring top rail end gap (90° before "EX" on piston crown).*
- *Oil ring (3rd) bottom rail end gap should be 180° from 3rd ring top rail end gap.*
- *One of the circlip should be assembled on the inner side of piston.*

Piston Rings

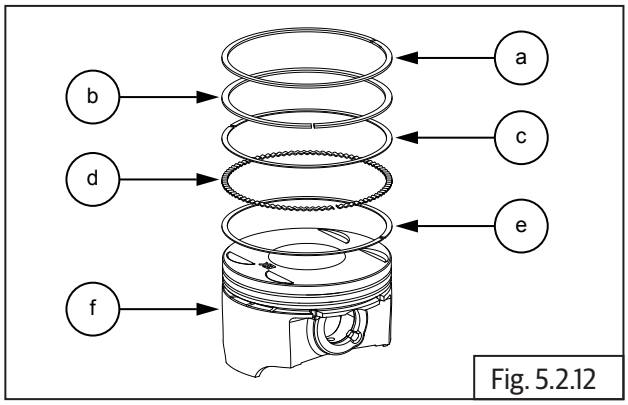

Fig. 5.2.12

a	Top ring
b	Middle ring
c	Oil ring top rail
d	Oil ring spacer
e	Oil ring bottom rail
f	Piston

Orientation Pattern

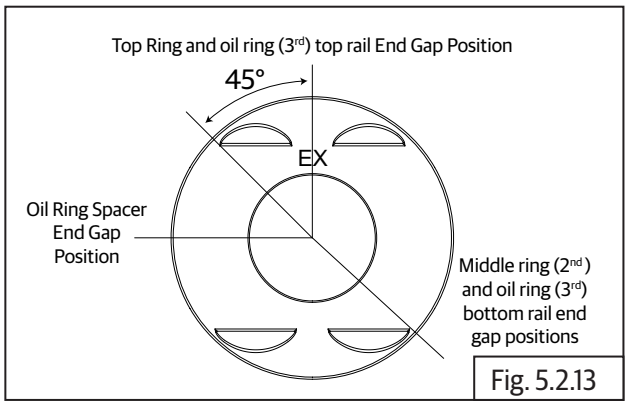

Fig. 5.2.13

- Top ring (1st) and oil ring (3rd) top rail end gap positions.

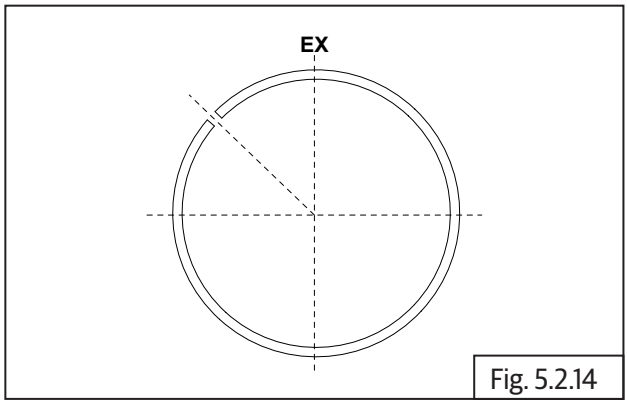

Fig. 5.2.14

- Middle (2nd) ring and oil ring (3rd) bottom rail end gap positions.

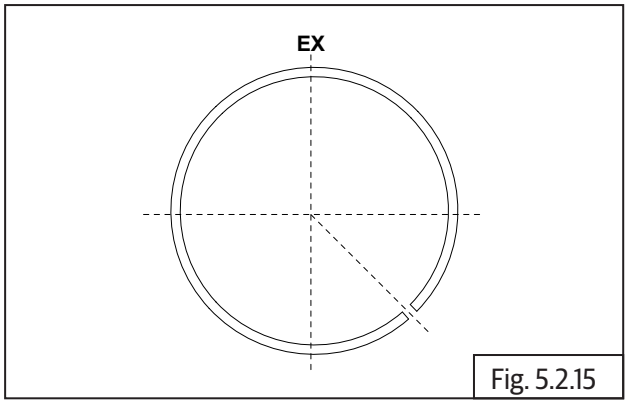

Fig. 5.2.15

- Oil ring spacer end gap position.

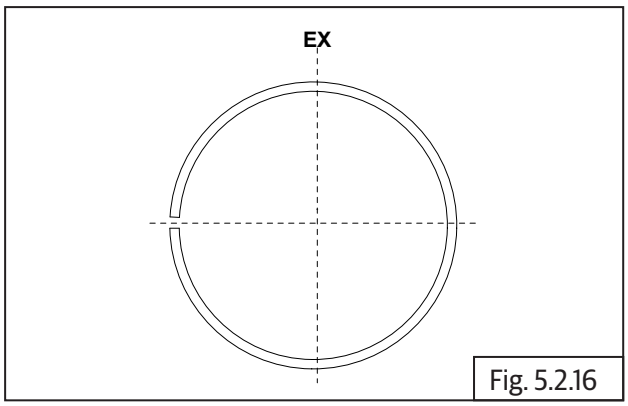

Fig. 5.2.16

5.2.8. Pistons on Connecting Rods

- Ensure circlip is assembled on the inner side of the piston LH.
- Ensure piston rings are assembled correctly on the piston.
- Locate piston LH on the connecting rod LH with the marking "EX" on the piston crown is towards the front.
- Ensure gudgeon pin mounting holes on piston and connecting rod are aligned and insert gudgeon pin **(a)** into piston from the outside, till it stops against the circlip on the inner side of the piston.

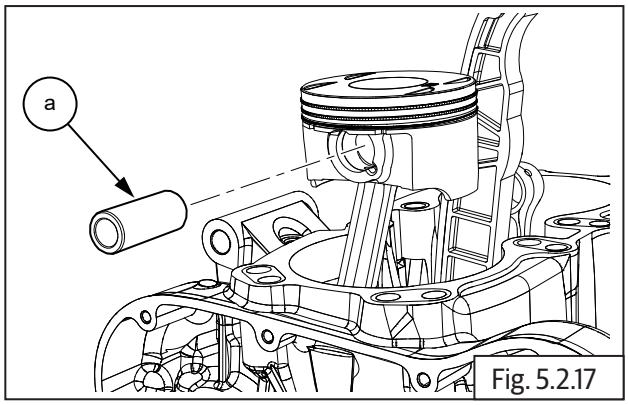

Fig. 5.2.17

- Locate the other circlip **(a)** in the groove in piston and ensure it is correctly and properly seated inside the groove.

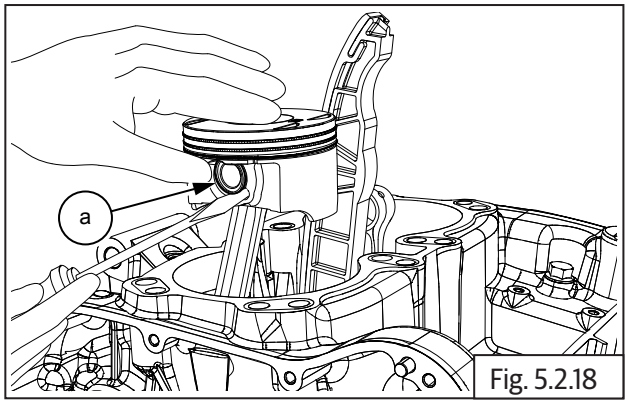

Fig. 5.2.18

	Small pointed chisel

- Repeat above procedure to assemble piston RH on the connecting rod RH.

5.2.9. Cylinder Barrel Dowels on Crankcase

- Install 2 Nos. dowel pins **(a)** and **(b)** on upper crankcase.

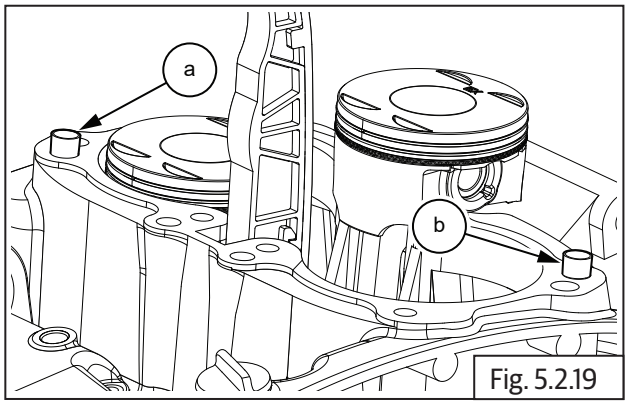

Fig. 5.2.19

5.2.10. Cylinder Barrel Gasket on Crankcase

- Ensure the gasket seating area in crankcase is clean.
- Ensure cam chain is routed through a new cylinder base gasket **(a)** and locate the gasket on crankcase **(b)**.
- Ensure proper seating of the gasket on the dowels on the crankcase.

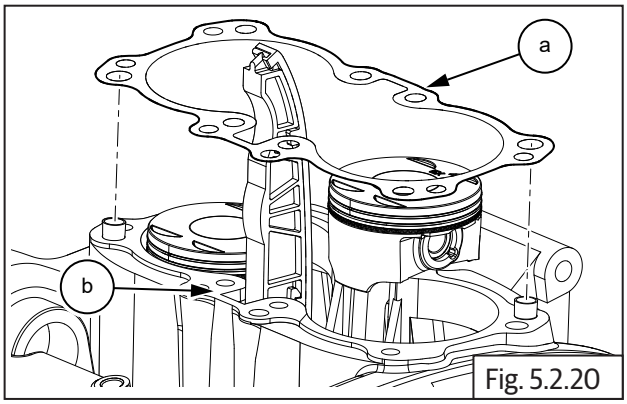

Fig. 5.2.20

5.2.11. Piston LH in Cylinder Barrel

- Ensure piston LH is at its top most position by rotating crankshaft clockwise. Locate piston ring compressor on piston LH.
- Compress piston rings with special tool **(a)**.

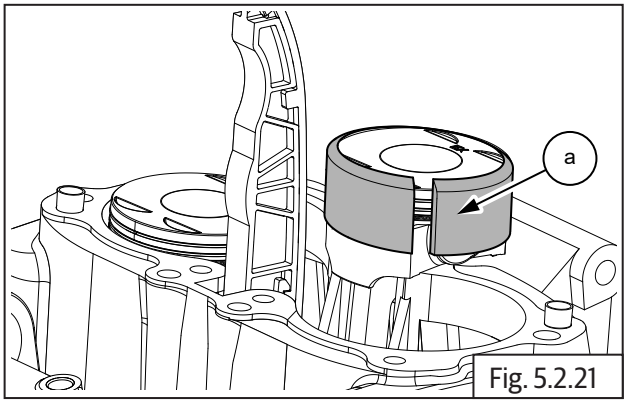

Fig. 5.2.21

SPL 	Part No: ST30296/a
	Part Name: Piston ring compressor

- Position and hold cylinder barrel above crankcase, route cam chain through cylinder barrel bottom and ensure it is supported firmly and suitably at the top.
- Ensure cylinder barrel LH is well lubricated, LH piston is held firmly and straight.
- Gently lower cylinder barrel **(a)** over the piston ring compressor tool on piston LH, till the piston is halfway into the cylinder barrel.

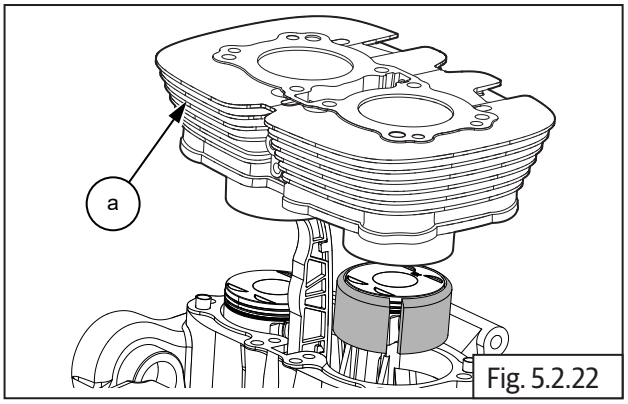

Fig. 5.2.22

- Hold cylinder barrel firmly in suspended position and remove the piston ring compressor special tool **(a)** from piston LH.

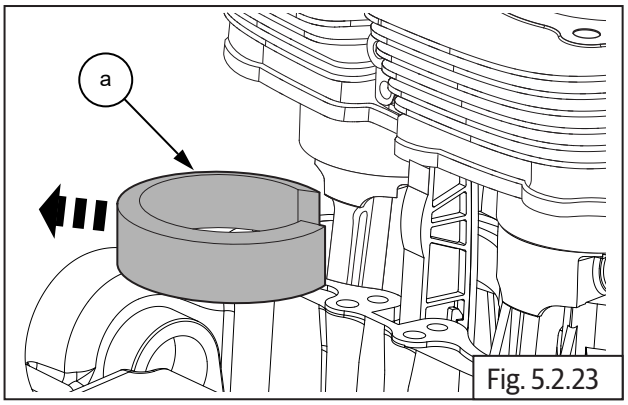

Fig. 5.2.23

SPL 	Part No: ST30296/a
	Part Name: Piston ring compressor

5.2.12. Piston RH in Cylinder Barrel

- Ensure cylinder barrel RH is well lubricated, RH piston is at its top most position, held firmly and straight.
- Locate piston ring compressor tool **(a)** over piston RH.

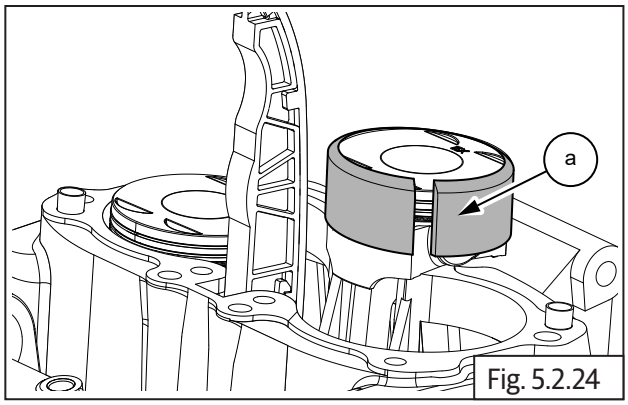

Fig. 5.2.24

SPL	Part No: ST30296/a
	Part Name: Piston ring compressor

- Gently lower cylinder barrel **(a)** till piston RH is halfway into the cylinder barrel.

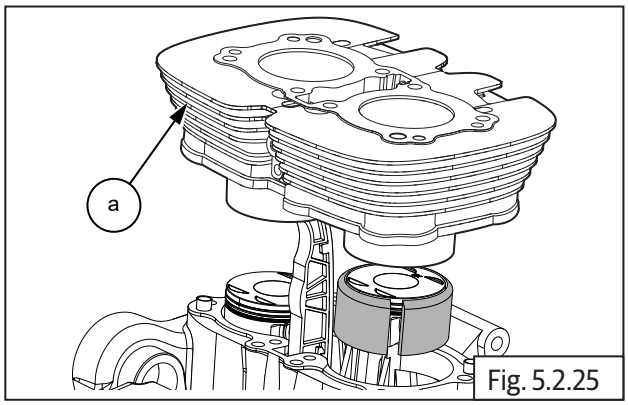

Fig. 5.2.25

- Hold cylinder barrel firmly in suspended position and remove the piston ring compressor special tool **(a)** from piston RH.

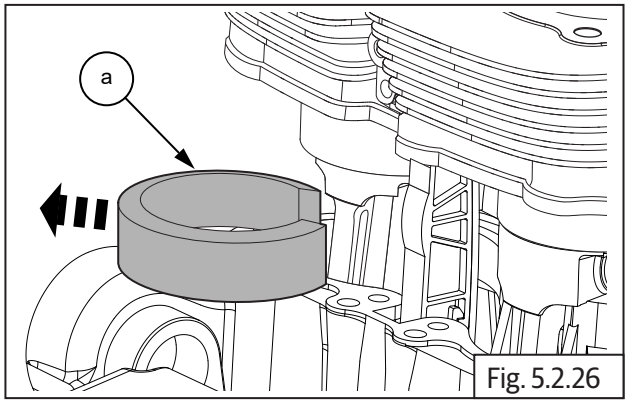

Fig. 5.2.26

SPL	Part No: ST30296/a
	Part Name: Piston ring compressor

- Gently lower cylinder barrel further, till it is firmly seated on the crankcase.
- Locate 2 Nos. dowel pins **(a)** on cylinder barrel and ensure they are seated properly.

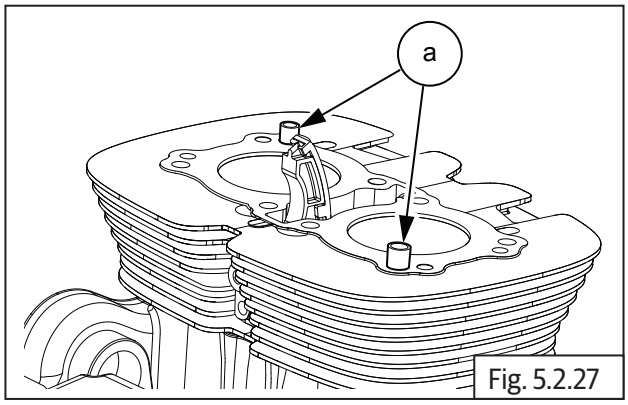

Fig. 5.2.27

5.2.13. Cylinder Head Gasket on Cylinder Barrel

- Ensure the gasket seating surface on cylinder barrel is clean.
- Ensure cam chain is routed through a new cylinder head gasket.
- Locate head gasket **(a)** on cylinder barrel and ensure it is properly seated on the dowel pins and cylinder barrel.

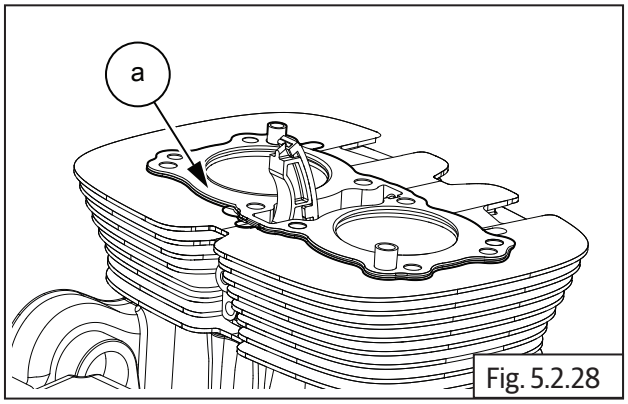

Fig. 5.2.28

5.2.14. Floating Chain Pad

- Hold timing chain **(a)** suitably and insert chain pad **(b)** into cylinder barrel with the rubber track facing inside.

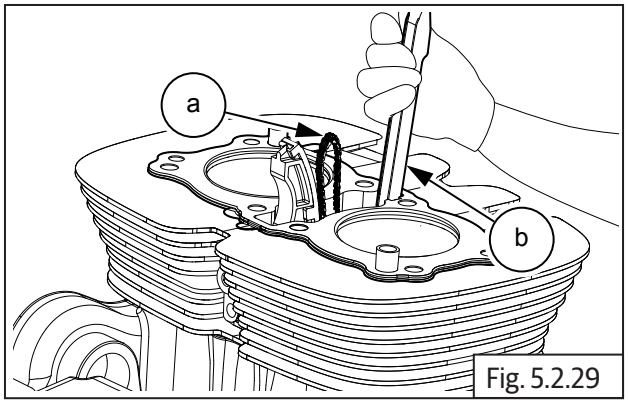

Fig. 5.2.29

⚠ CAUTION

Ensure floating chain pad seating correctly in the crankcase and free radial movement.

5.2.15. Components in Cylinder Head

Valves and Springs

- Install 8 valve stem seals **(b)** on the 8 valve guides **(a)**.

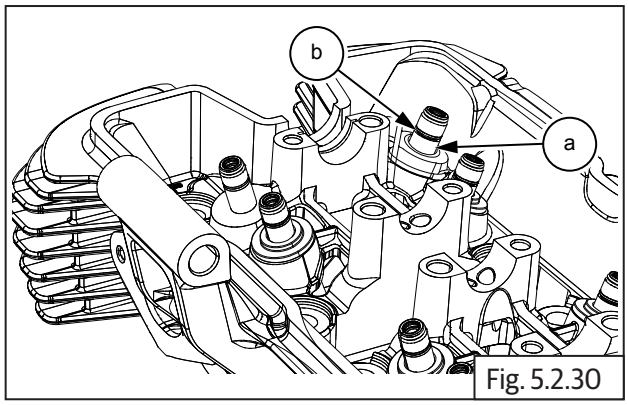

Fig. 5.2.30

- Lubricate and insert the valves **(a)** into the valve guides inside cylinder head **(b)**.

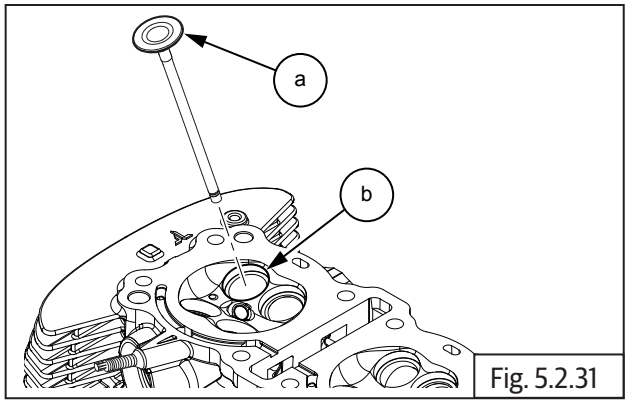

Fig. 5.2.31

- Support the valve inside cylinder head and assemble valve spring **(a)** over valve stem **(b)** in the outer area of the cylinder head.

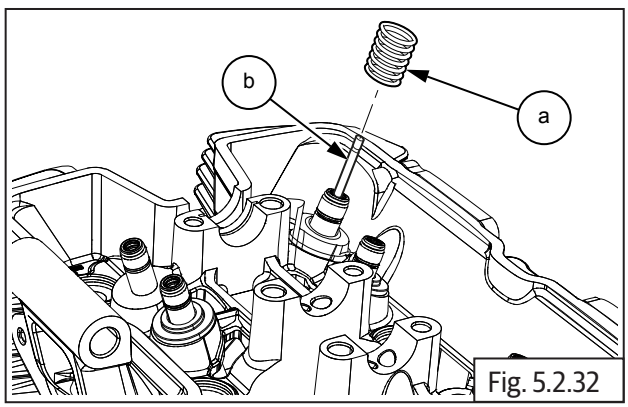

Fig. 5.2.32

- Insert collar **(a)** above valve spring **(b)**.

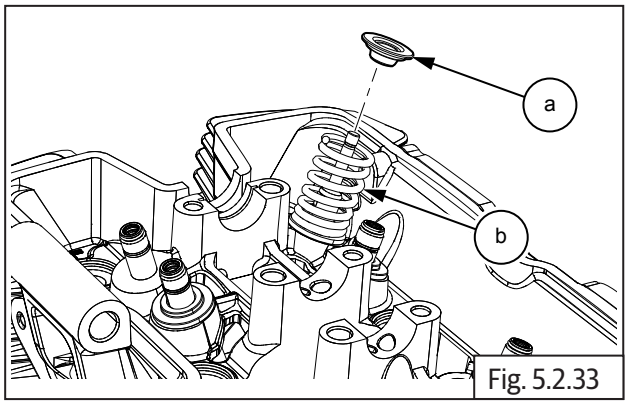

Fig. 5.2.33

- Locate valve spring compressor special tool on the valve such that the threaded screw end of the tool is seated centrally on the valve inside the cylinder head and the other end is seated on the valve spring collar on the outer side of the cylinder head.
- Compress valve spring with special tool **(a)** by "hand tightening" the threaded screw of the special tool gently, till it locks against the valve**.**

⚠ CAUTION
DO NOT overtighten the special tool as it will damage both the valve seating surface and the special tool.

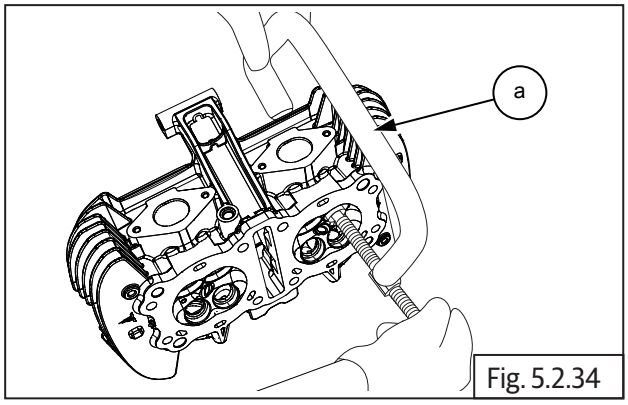

Fig. 5.2.34

SPL	Part No: ST-27528-2
	Part Name: Valve spring compressor

- Locate two split cotters **(a)** on the collar with their tapered end facing inside and the flat edges seated against the valve stem top portion.

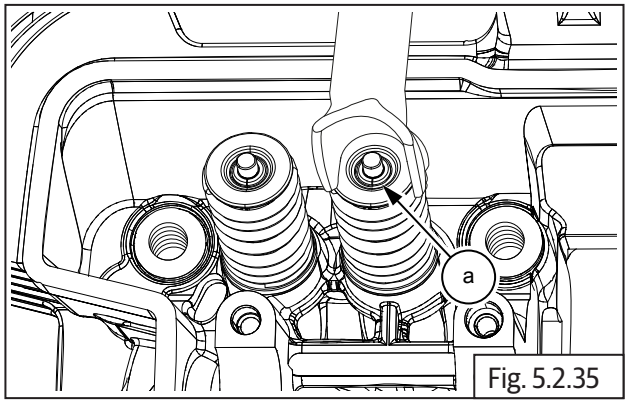

Fig. 5.2.35

SPL	Part No: ST-27528-2
	Part Name: Valve spring compressor

- Gently and slowly release valve spring compressor tool by unscrewing the threaded shaft, duly ensuring the valve cotters are locked in place on the valve stem and the tapered surfaces of the cotters are inside the valve spring collar.
- Remove valve spring compressor special tool **(a)** from the valve.

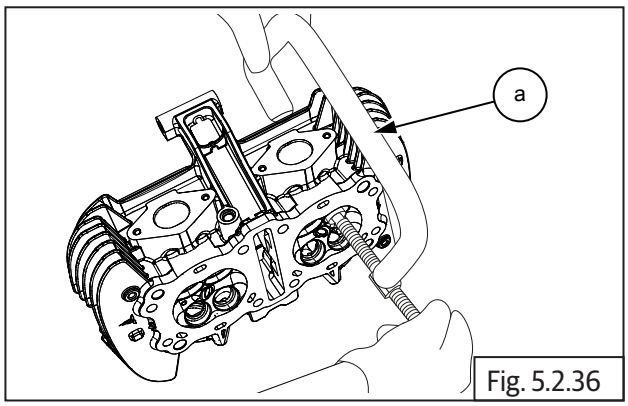

Fig. 5.2.36

- Repeat the above process to install the other seven valves, springs, collars and cotters on the cylinder head.

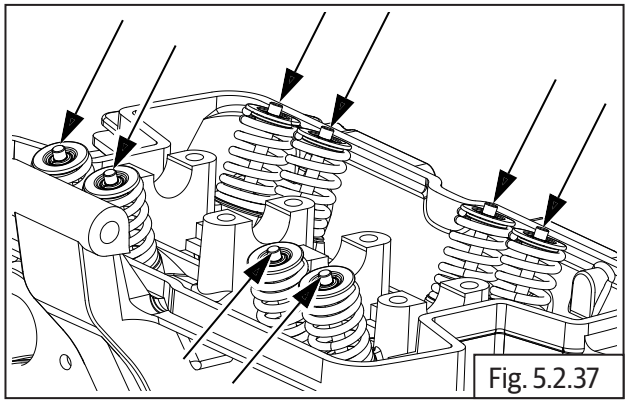
Fig. 5.2.37

5.2.16. Cylinder Head on Cylinder Barrel

Cylinder Head Assembly on Cylinder Barrel

- Position cylinder head over the barrel such that the exhaust ports are facing towards the front and inlet ports are towards the rear of the engine.
- Ensure the 2 dowels **(a)** and cylinder head gasket are located on the cylinder barrel.
- Ensure the cam chain pads are positioned correctly and route the cam chain from the lower side of the cylinder head to the top.
- Support cam chain suitably to prevent it from falling into cylinder head.

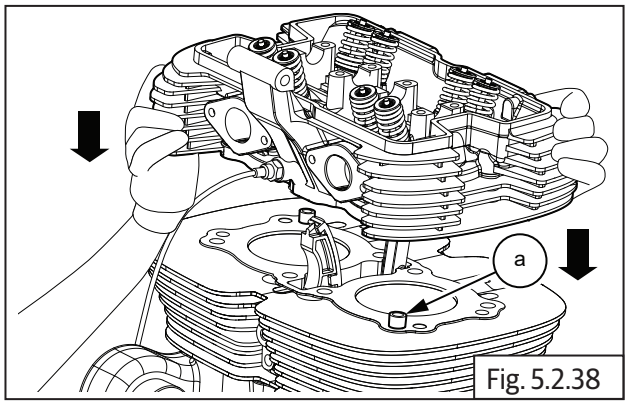

Fig. 5.2.38

⚠ CAUTION

Cylinders bolts are pre-coated and hence should be used one time only. DO NOT reuse.

- Locate new 8 Nos. Hex flange head bolts **(M10) (a)** along with washers on the cylinder head.

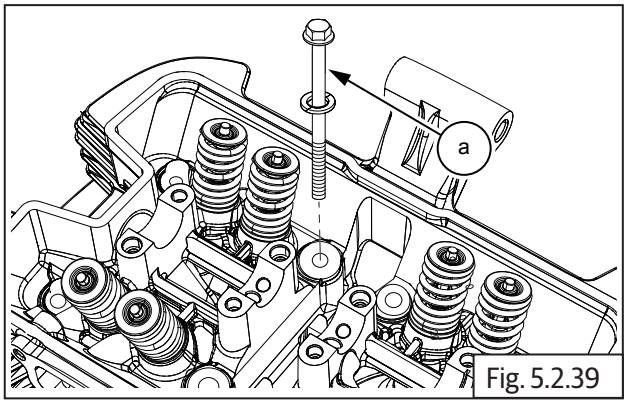

Fig. 5.2.39

	12 mm Socket with Ratchet

- Tighten the cylinder head bolts in a crisscross pattern to the initial 1st torque values FIRST and then to the 2nd torque values as specified below.

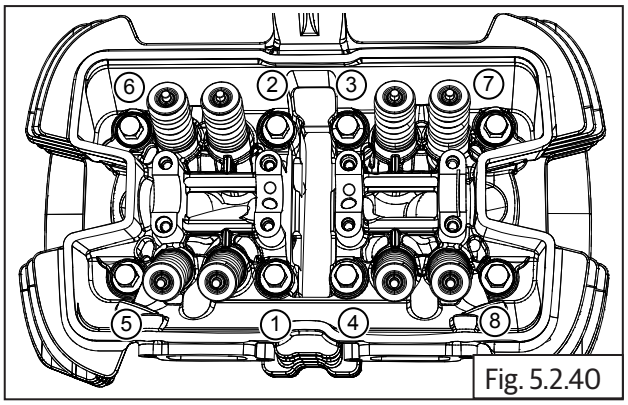

Fig. 5.2.40

- Finally tighten each of the cylinder head bolts using an angular torque wrench, to the specified angular torque value given below and in the same crisscross pattern detailed above.

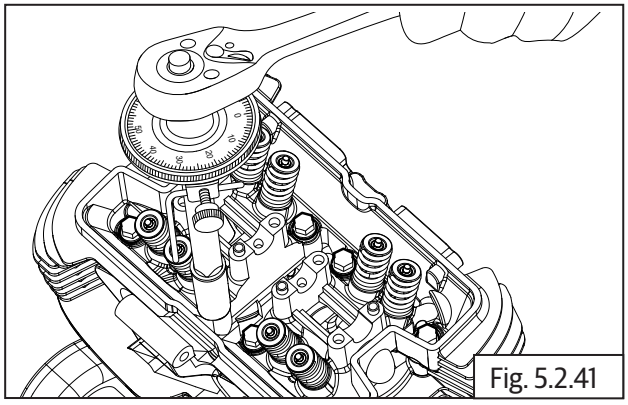

Fig. 5.2.41

	14 mm Socket with Angle wrench
1st Torque	15 N-m/1.5 kgf-m
2nd Torque	35 N-m/3.5 kgf-m
Angular Torque	270° (deg)

⚠ CAUTION

Torque and angle should be as specified. Do not over-torque as it will damage the bolts.

5.2.17. Starter Clutch to Magneto Rotor

- Lubricate one-way clutch **(d)** and assemble into outer ring **(c)** with the collar seating in the groove in the outer ring.
- Position outer ring on magneto rotor such that the collar of the starter clutch is facing magneto rotor.
- Ensure mounting holes are aligned, insert 6 Nos. Hex socket head screws **(M6) (a)** into magneto rotor **(b)** and tighten outer ring **(c)** to rotor to specified torque.

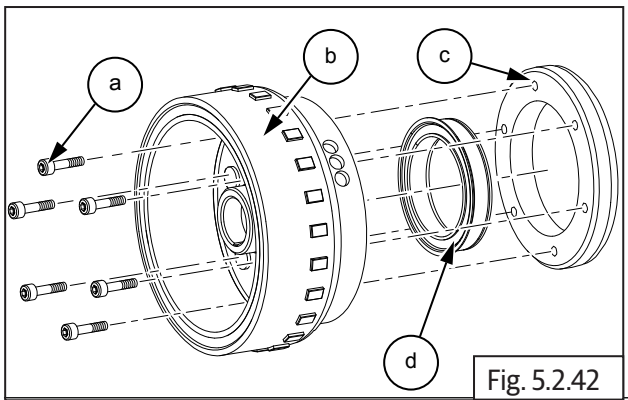

Fig. 5.2.42

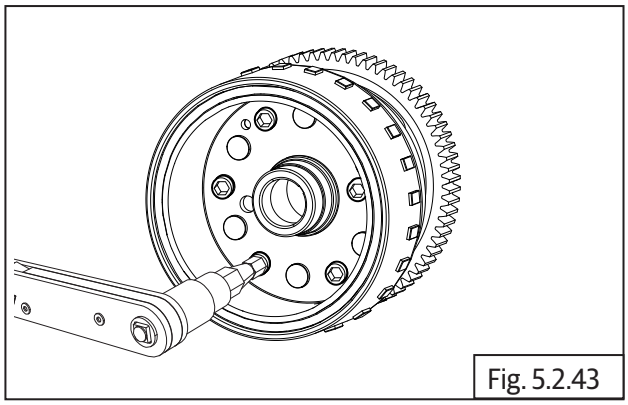

Fig. 5.2.43

	5 mm Allen socket with Torque wrench
Torque	10 N-m/1 kgf-m

5.2.18. Idle Gear in Crankcase LH

- Position idle gear **(a)** against crankcase with smaller gear facing outside and insert idle gear spindle into boss in crankcase.

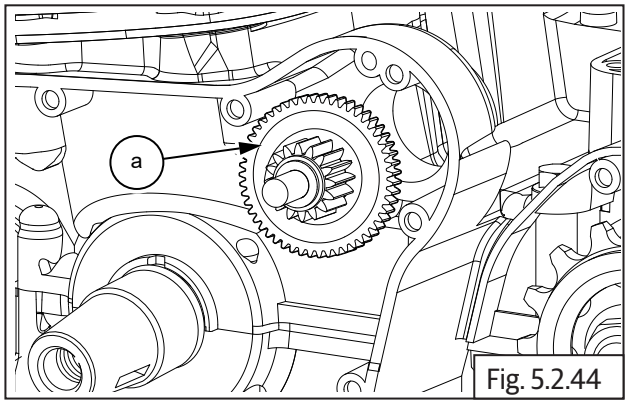

Fig. 5.2.44

5.2.19. Woodruff Key on Crankshaft

- Assemble woodruff key **(a)** on crankshaft and ensure it is facing upwards by rotating crankshaft.

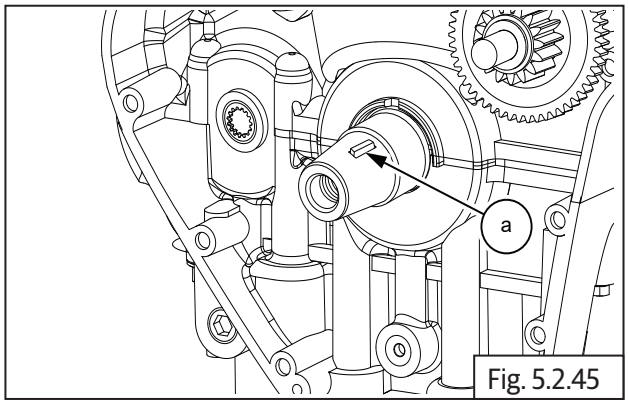

Fig. 5.2.45

5.2.20. Magneto Rotor on Crankshaft

- Position gear starter clutch with the collar facing outside.
- Insert gear starter clutch **(a)** into magneto rotor **(b)** and rotate anti-clockwise to lock the gear starter clutch into magneto rotor.

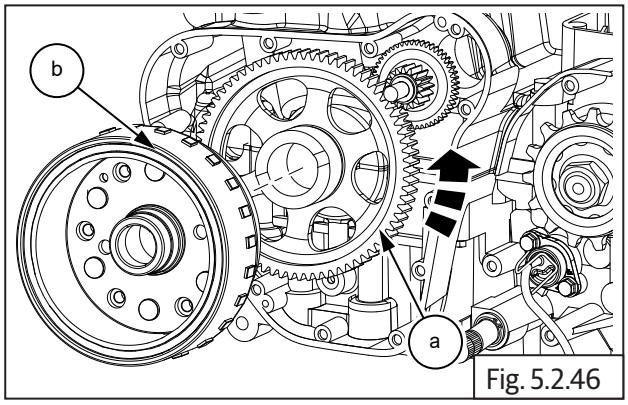

Fig. 5.2.46

- Locate magneto rotor **(a)** on crankshaft duly ensuring the slot in the rotor is positioned correctly on woodruff key.

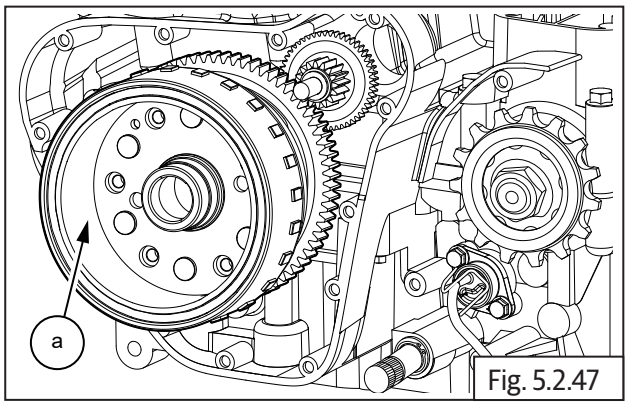

Fig. 5.2.47

- Locate and assemble Hex flange bolt **(M12) (a)** with washer on magneto rotor and tighten bolt just sufficiently.

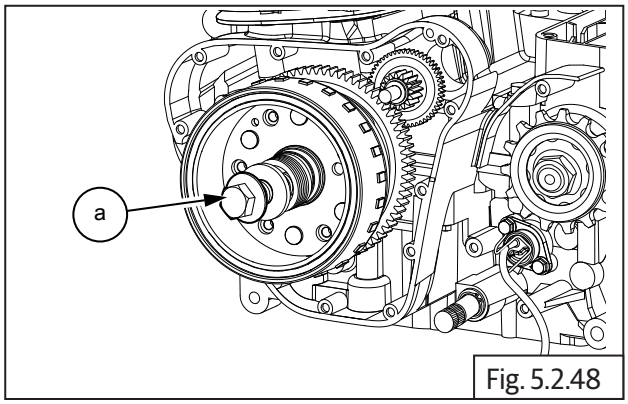

Fig. 5.2.48

- In order to tighten magneto rotor bolt, Insert special tool **(a)** in crankcase RH to lock the crankshaft and prevent rotation.
- Ensure LH piston is at TDC on compression stroke, before locating special tool inside crankcase RH.

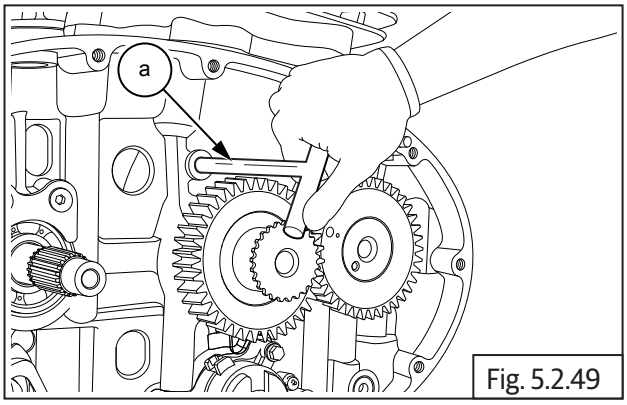

Fig. 5.2.49

SPL 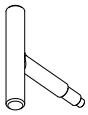	Part No: ST-27533-2
	Part Name: Magneto and Clutch locking tool
Torque	155 N-m/15.5 kgf-m

	17 mm Socket with Ratchet and Torque wrench

- Remove special tool from crankcase RH side after tightening magneto rotor bolt.

5.2.21. Camshaft Sub Assembly

- Hold the timing chain in stretched condition and gently rotate crankshaft clockwise to bring LH piston to TDC.

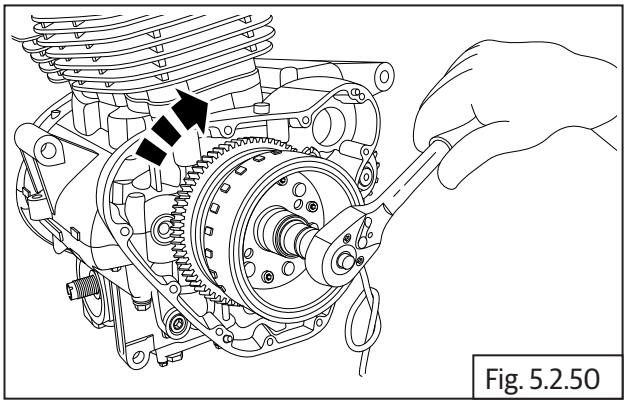
Fig. 5.2.50

	17 mm Socket with Ratchet

⚠ CAUTION

DO NOT rotate crankshaft anti-clockwise.

- Hold sprocket in position with one of the slotted holes facing on top.

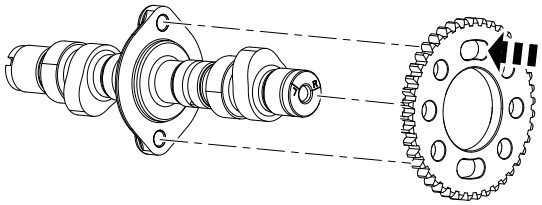

Fig. 5.2.51

- Assemble cam chain **(a)** on sprocket and locate camshaft **(b)** into sprocket from the RH side.

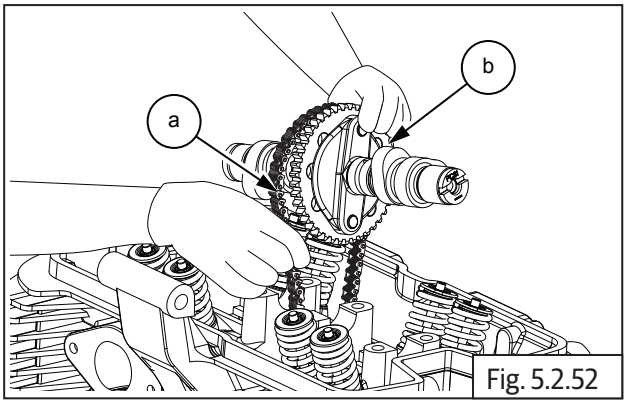

Fig. 5.2.52

- Ensure reference mark "L" in the camshaft is aligned to the cylinder head on LH side.

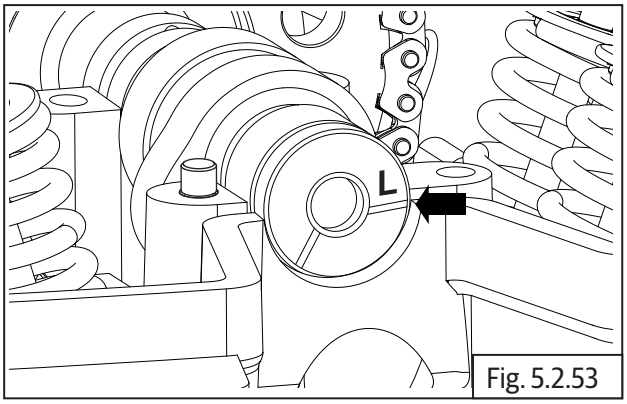

Fig. 5.2.53

- Ensure the **flat edge** of the special tool **(a)** is correctly located in the slot on the camshaft on RH side **AND** the tool is resting correctly on the cylinder head.
- Gently rotate camshaft to ensure proper seating of the tool in the camshaft slot and cylinder head.

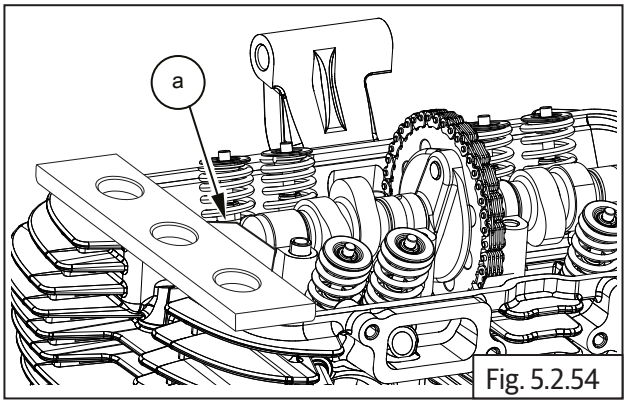

Fig. 5.2.54

SPL	Part No: ST30260/a
	Part Name: Cam TDC Aligning Plate

- Locate timing chain sprocket on camshaft with its mounting slot centralized to the threads in the camshaft.
- Locate and tighten Hex head bolt **(M8) (a)** sufficiently on timing chain sprocket. **DO NOT TIGHTEN FULLY.**

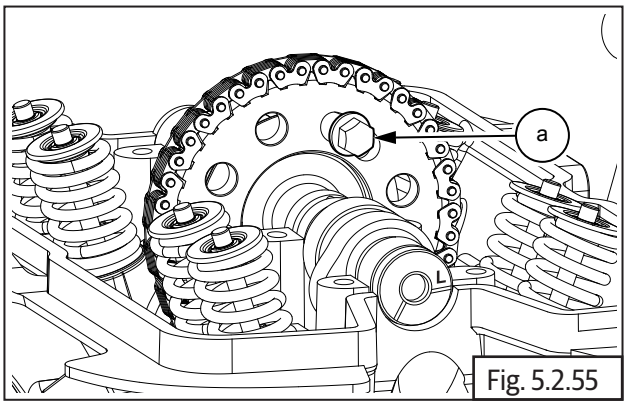

Fig. 5.2.55

- Remove the special tool from the camshaft on RH side.
- Rotate magneto **(a)** till another slotted hole on cam chain sprocket is at top most position. Ensure reference mark "R" aligned to the cylinder head.

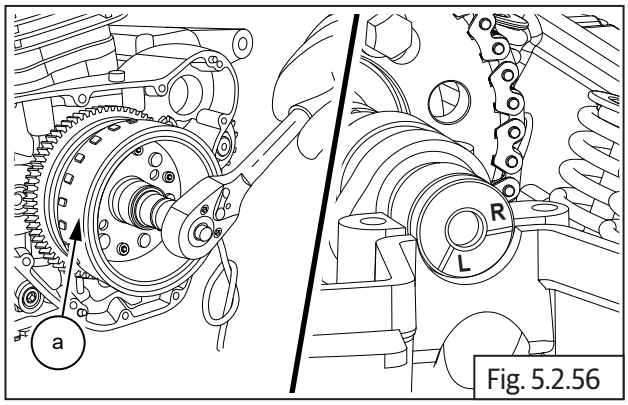

Fig. 5.2.56

	17 mm Socket with Ratchet

- Ensure the **angular edge** of the special tool **(a)** is correctly located in the slot on the camshaft on RH side **AND** the tool is resting correctly on the cylinder head.
- Gently rotate camshaft. If necessary, to ensure proper seating of the tool in the camshaft slot and cylinder head.

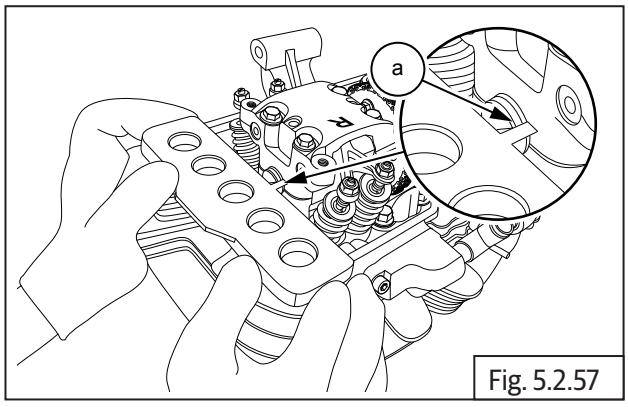

Fig. 5.2.57

SPL	Part No: ST30260/a
	Part Name: Cam TDC Aligning Plate

- Locate the other Hex head bolt **(M8) (a)** in the slotted hole on timing chain sprocket and tighten to specified torque.

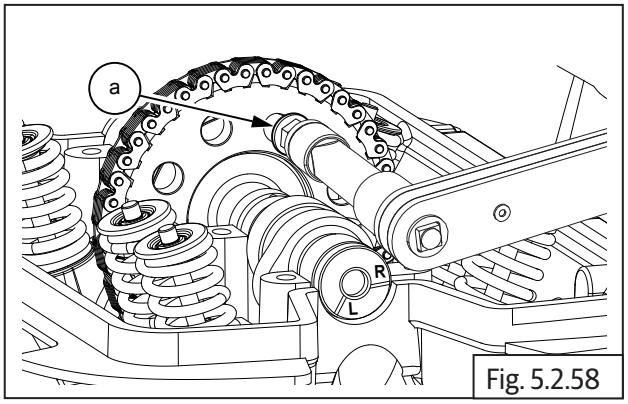

Fig. 5.2.58

	12 mm Socket with Torque wrench
Torque	35 N-m/3.5 kgf-m

- Remove the special tool from cylinder head on RH side.
- Rotate the magneto **(a)** clockwise till the first bolt is visible at top most position on cam chain sprocket.

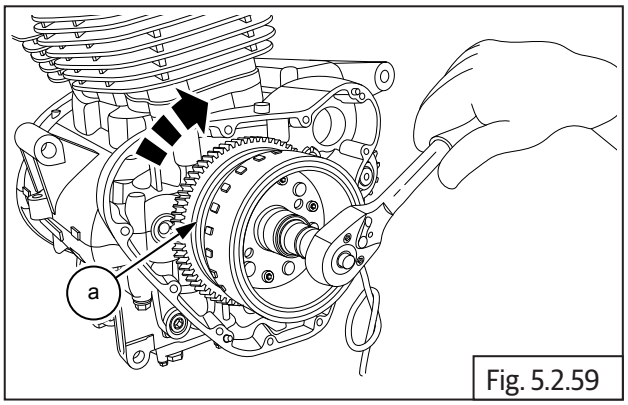

Fig. 5.2.59

	17 mm Socket with Ratchet

- Ensure reference mark "L" in the camshaft is aligned to the cylinder head on LH side.

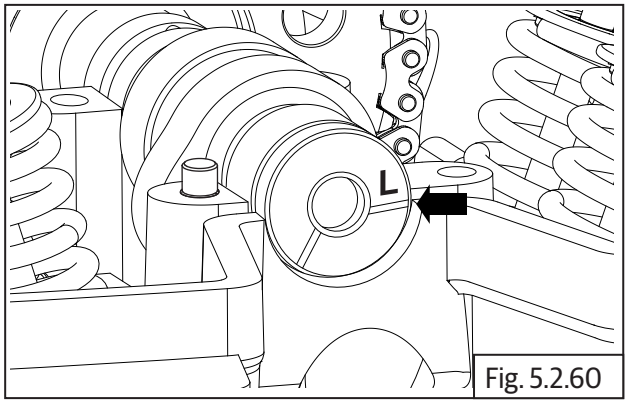

Fig. 5.2.60

- Tighten Hex head bolt **(M8) (a)** to specified torque.

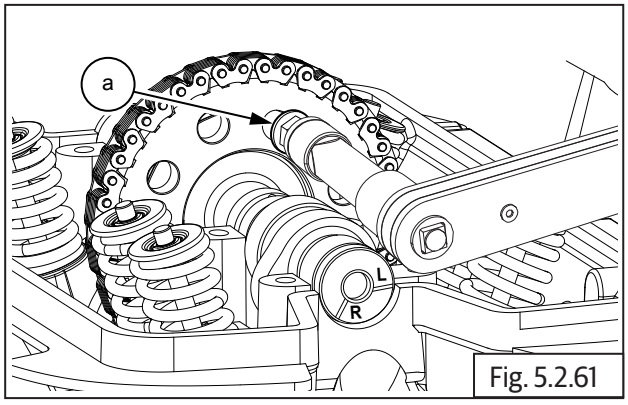

Fig. 5.2.61

	12 mm Socket with Torque wrench
Torque	35 N-m/3.5 kgf-m

- Locate and fit "C" washer **(a)** on camshaft.

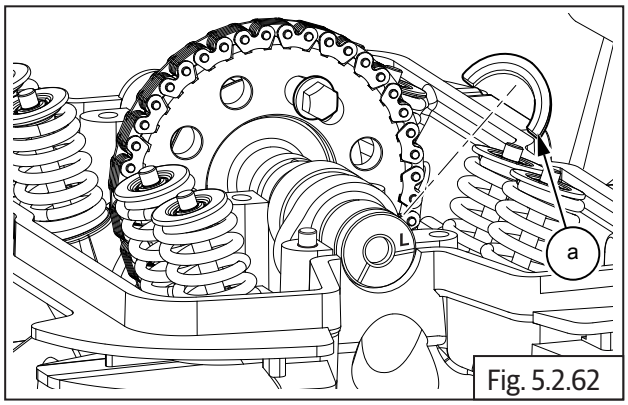

Fig. 5.2.62

5.2.22. Timing Chain Tensioner

- Ensure center bolt is removed from timing chain tensioner.
- Insert screw driver into timing chain tensioner adjuster **(a)** and loosen screw completely to release spring tension.

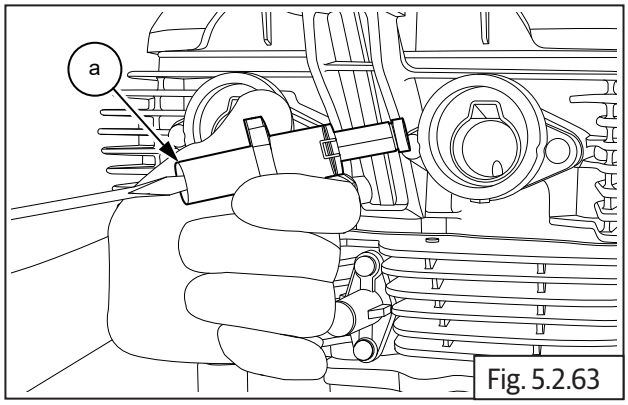

Fig. 5.2.63

	Screw driver

- Assemble new gasket on chain tensioner housing **(a)**. Ensure the foot is fully retracted into chain tensioner and locate chain tensioner adjuster in cylinder barrel such that the longer side of the foot is facing towards cylinder barrel RH.

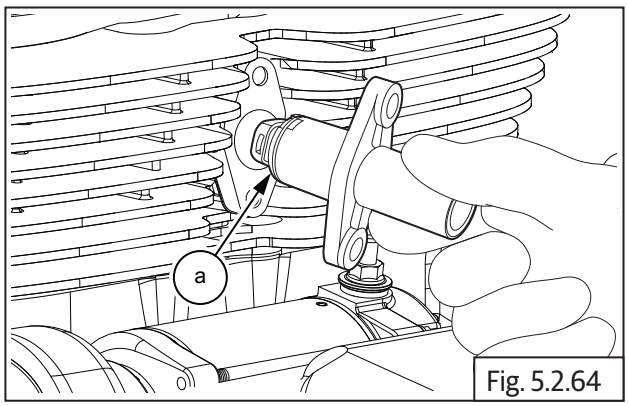

Fig. 5.2.64

- Assemble 2 Nos. Hex flange head bolt **(M6) (a)** on chain tensioner adjuster and tighten to specified torque.

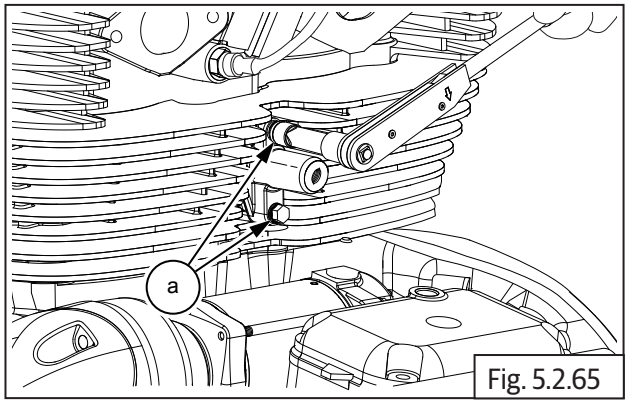

Fig. 5.2.65

	10 mm Socket with Torque wrench
Torque	12 N-m/1.2 kgf-m

- Locate screw driver into chain tensioner adjuster **(a)** and tighten tensioner screw till it comes to a stop. **DO NOT OVER TIGHTEN.**

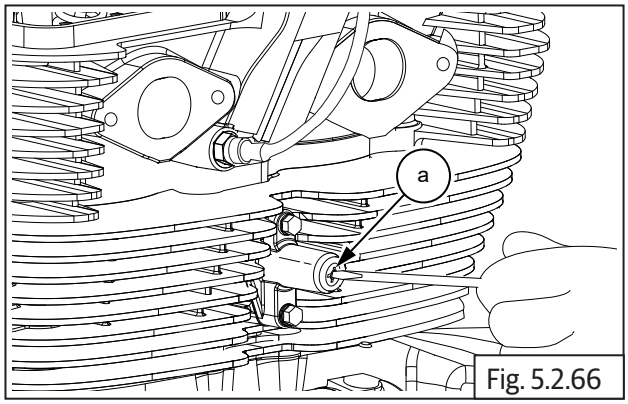

Fig. 5.2.66

	Screw driver

- Locate new O-ring **(b)** and, assemble Hex flange head bolt **(M6) (a)** on chain tensioner adjuster and tighten fully to specified torque.

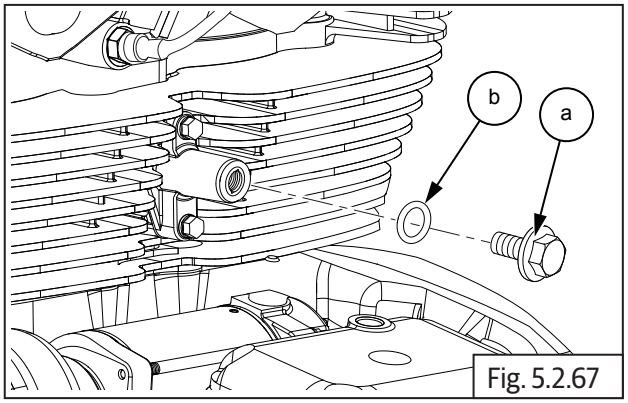

Fig. 5.2.67

	10 mm Socket with Ratchet and Torque wrench
Torque	4 N-m/0.4 kgf-m

5.2.23. Rocker Arms in Carriers LH and RH

Exhaust Rocker Arm in Carrier "L"

- Place the carrier **(a)** on a work table with the mark "L" facing upwards.

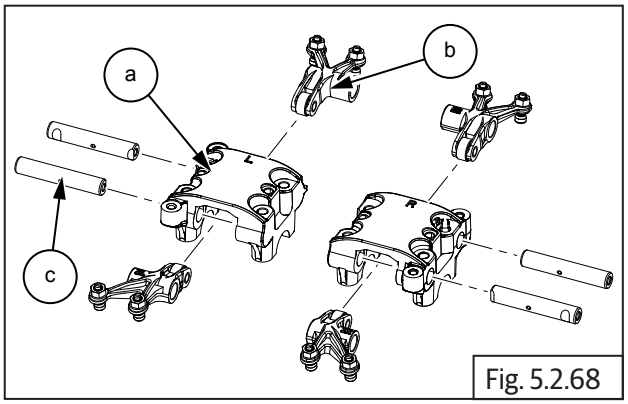

Fig. 5.2.68

- Locate rocker arm **(b)** with the marking "EL" into carrier "L" duly ensuring the following.
  - The roller of the rocker arm is inserted from the side marked "L".
  - The tappet adjustment screws are facing upwards.
  - Ensure the holes are aligned and insert spindle with its small chamfer side in the carrier.
  - Ensure cut away in spindle is correctly aligned to the carrier mounting hole.
  - Align and insert the spindle **(c)** into rocker carrier and rocker arm.

Intake Rocker Arm in Carrier "L"

- Locate rocker arm with the marking "IL" into carrier "L" duly ensuring the following.
  - The roller of the rocker arm is inserted from the OPPOSITE side marked "L".
  - The tappet adjustment screws are facing upwards.
  - Ensure the holes are aligned and insert spindle with its small chamfer side in the carrier.
  - Ensure cut away in spindle is correctly aligned to the carrier mounting hole.
  - Align and insert the spindle **(c)** into rocker carrier and rocker arm.
- Repeat the above process to assemble rocker arm "ER" and "IR" into carrier "R".

5.2.24. Rocker Carrier on Cylinder Head LH

NOTE
• *Ensure "L" mark on camshaft is aligned to cylinder head.*

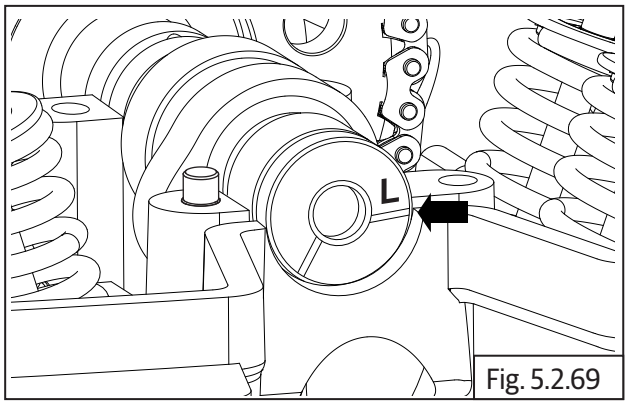

Fig. 5.2.69

- Insert special tool **(a)** in crankcase RH to lock the crankshaft and prevent rotation.

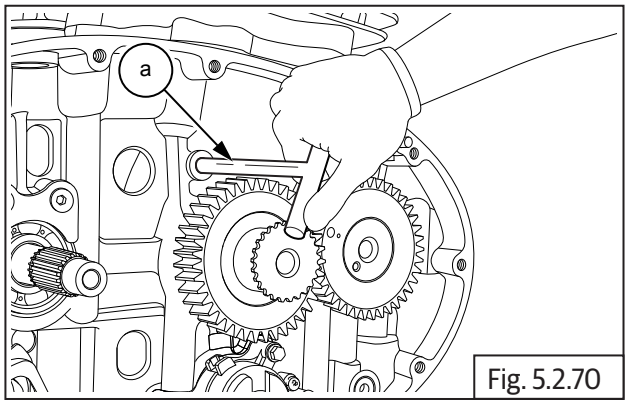

Fig. 5.2.70

SPL 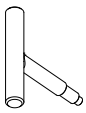	Part No: ST-27533-2
	Part Name: Magneto and Clutch locking tool

- Ensure the tappet adjuster locknuts and adjusters are fully loosened on the intake and exhaust rocker arms.
- Assemble rocker carrier LH **(a)** on cylinder head LH such that tappet adjusters are above the inlet and exhaust valves.
- Assemble 4 Nos. Hex flange head bolts **(M6) (b)** on rocker carrier and tighten in a crisscross pattern to specified torque.

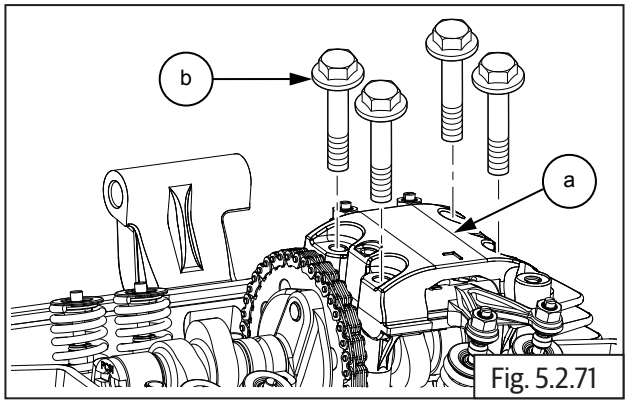

Fig. 5.2.71

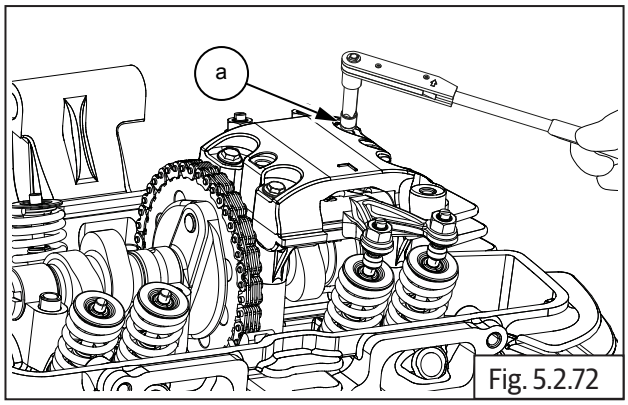

Fig. 5.2.72

	10 mm Socket with Torque wrench
Torque	12 N-m/1.2 kg-m

- Remove magneto and clutch locking tool from crankcase RH side.

5.2.25. Rocker Carrier on Cylinder Head RH

- Rotate magneto **(a)** clockwise and ensure reference mark "R" is aligned with cylinder head.

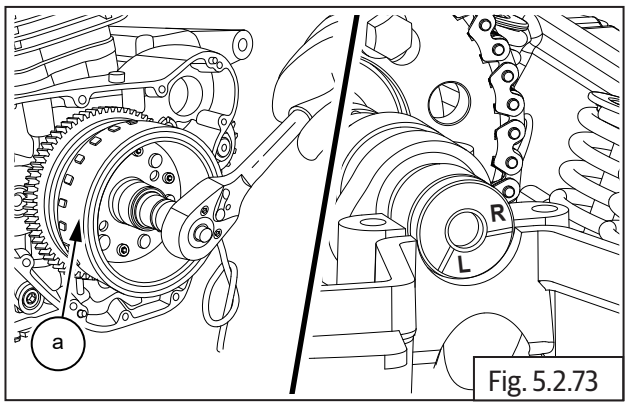

Fig. 5.2.73

	17 mm Socket with Ratchet

- Ensure the tappet adjuster locknuts and adjusters are fully loosened on the intake and exhaust rocker arms.
- Assemble rocker carrier RH **(a)** on cylinder head RH such that the tappet adjusters are above the inlet and exhaust valves.
- Assemble 4 Nos. Hex flange head bolts **(M6) (b)** on rocker carrier **(a)** and tighten in a crisscross pattern to specified torque.

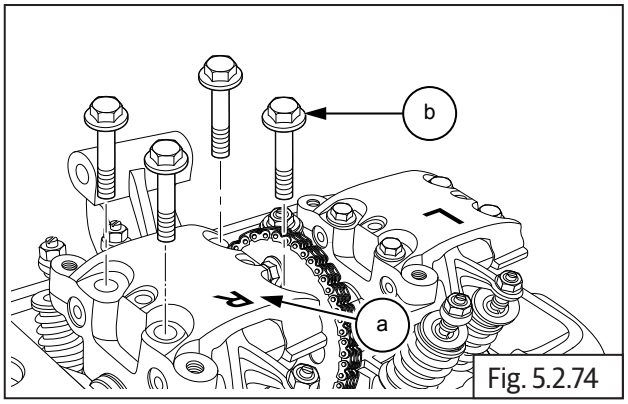

Fig. 5.2.74

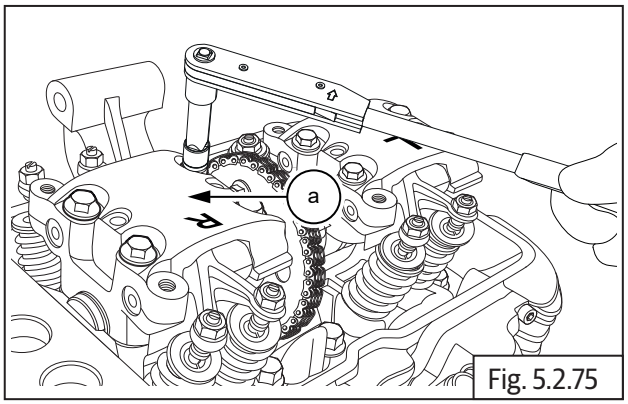

Fig. 5.2.75

	10 mm Socket with Torque wrench
Torque	12 N-m/1.2 kgf-m

5.2.26. Tappet Clearance Adjustment

Tappet Clearance Cylinder Head LH

- Ensure "L" mark on camshaft **(a)** is aligned to cylinder head.

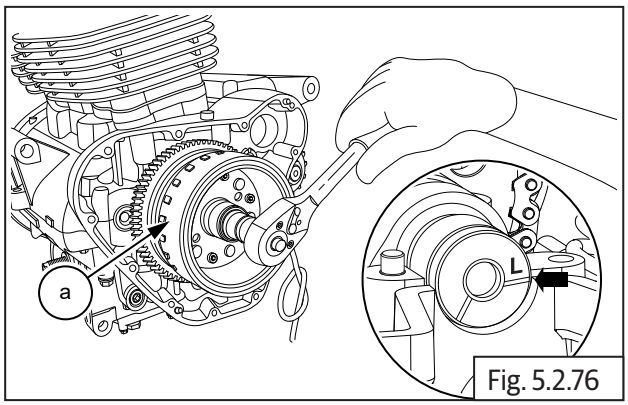

Fig. 5.2.76

- Ensure the **flat edge** of the special tool **(a)** is correctly located in the slot on the camshaft on RH side **AND** the tool is resting correctly on the cylinder head.
- Gently rotate crankshaft to ensure proper seating of the tool in the camshaft slot and cylinder head.

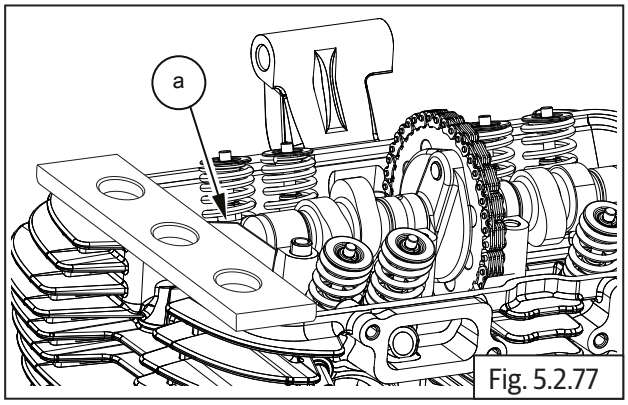

Fig. 5.2.77

SPL	Part No:ST30260/a
	Part Name: Cam - TDC aligning plate

- Loosen tappet adjuster screw locknut **(a)** with tappet adjusting tool and ensure locknut is sufficiently loose.

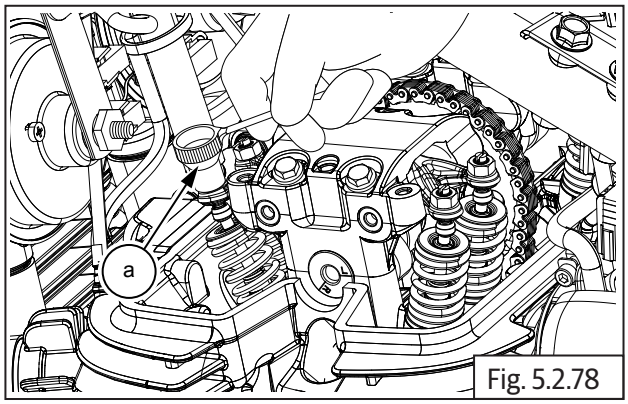

Fig. 5.2.78

SPL	Part No: ST-27527-2
	Part Name: Tappet adjusting tool

- Insert a screwdriver into the tappet adjusting tool **(b)** and ensure it is seated correctly on the adjuster screw **(a)**.

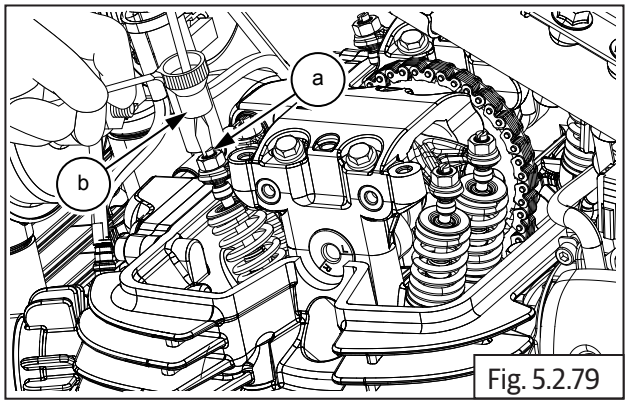

Fig. 5.2.79

- Locate feeler strip **(a)** between adjuster screw and valve stem as per thickness mentioned below.

For intake	0.08 mm
For exhaust	0.18 mm

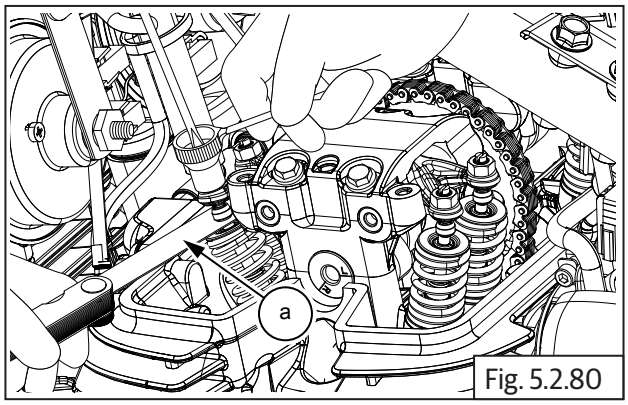

Fig. 5.2.80

- Gently pull out feeler strip **(a)** and check if it comes out freely OR with resistance.

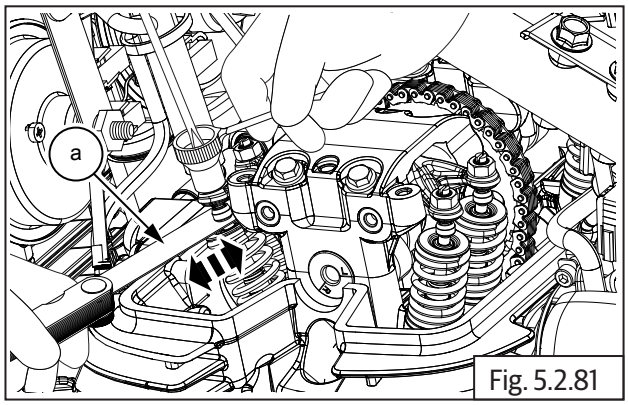

Fig. 5.2.81

- In case feeler strip comes out freely the adjuster screw has to be tightened.
- In case feeler strip movement is hard, the adjuster screw must be loosened.
- Tighten/loosen adjuster screw using screw driver, while simultaneously checking correct and smooth movement of feeler strip.
- Ensure tappet adjusting tool **(a)** does not rotate while adjusting the screw.

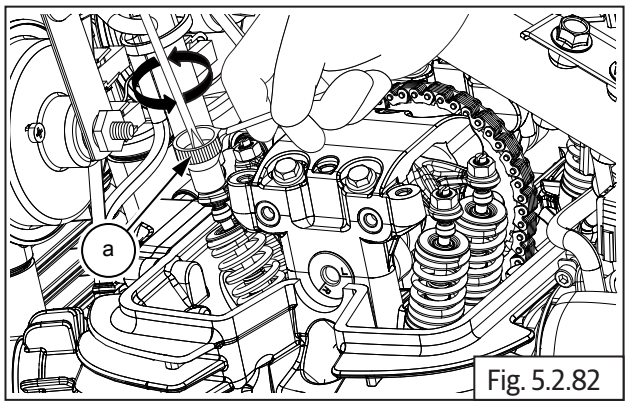

Fig. 5.2.82

- After setting correct gap, remove feeler strip, hold screw driver firmly such that the setting **DOES NOT** gets disturbed and gently lock the lock nut against rocker arm using special tool **(a)**.

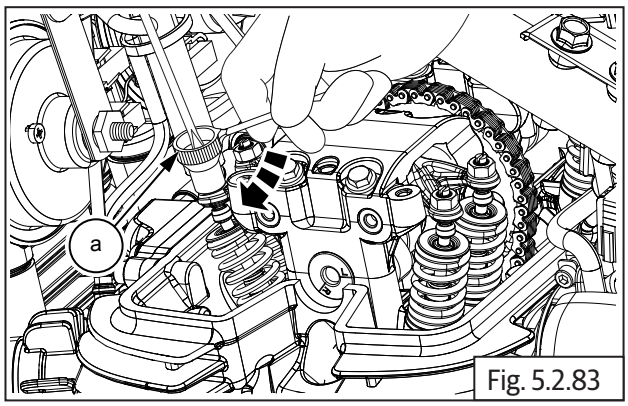

Fig. 5.2.83

- Repeat above steps to adjust the other tappet in cylinder head LH.

NOTE
• *Reconfirm correctness of tappet clearances before final locking of lock nuts.*

⚠ **CAUTION**
Do not adjust tappets with less OR no clearance as it will result in poor compression, valve burn-out and wear-out of tappet adjuster foot. **Do not adjust tappet with high clearance as will result in noise and insufficient opening of the valves.**

- Remove screw driver and both special tools after adjustment is complete.

Tappet Clearance Cylinder Head RH

- Ensure "R" mark on camshaft **(a)** is aligned to cylinder head.

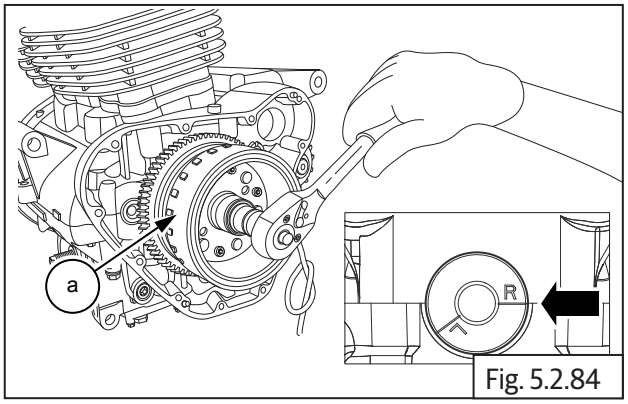

Fig. 5.2.84

- Ensure the **angular edge** of the special tool **(a)** is correctly located in the slot on the camshaft on RH side **AND** the tool is resting correctly on the cylinder head.
- Gently rotate crankshaft to ensure proper seating of the tool in the camshaft slot and cylinder head.

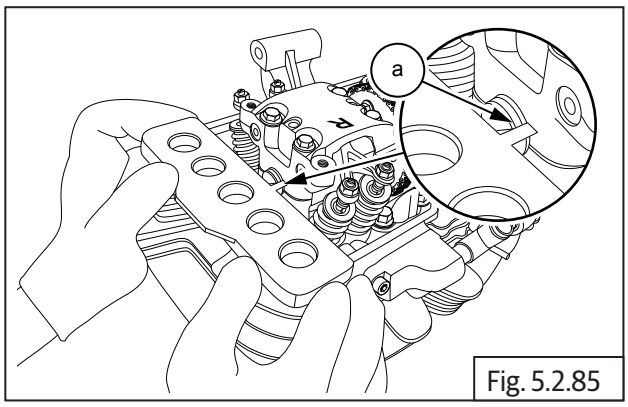

Fig. 5.2.85

SPL 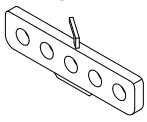	Part No: ST30260/a
	Part Name: Cam TDC Aligning Plate

- Adjust the tappets clearances as mentioned in tappets adjustment LH.

5.2.27. Cover Cylinder Head

NOTE
• *Ensure the cover-cylinder head seating surface and gasket seating groove are clean.*

- Locate new rubber gasket in the groove in cylinder head cover and ensure it is properly and evenly seated.

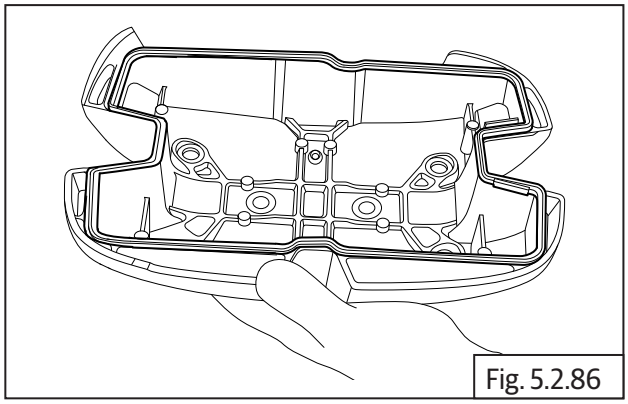
Fig. 5.2.86

- Locate cylinder head cover **(a)** on cylinder head with its narrow slot facing towards the front of the engine.

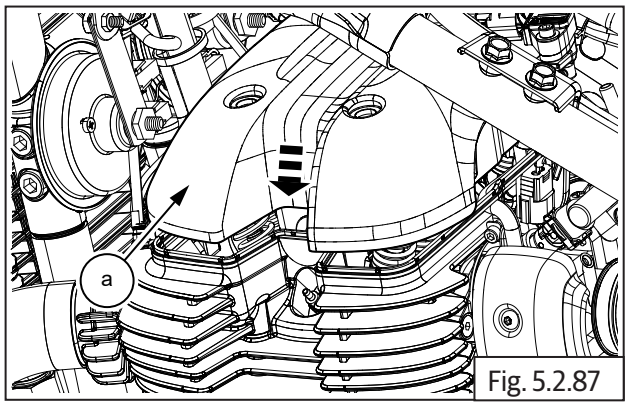

Fig. 5.2.87

- Assemble new seal washers **(a)** on the 4 Nos. Hex flange head bolts **(M5) (b)**.
- Locate the bolts on cylinder head cover **(c)** and tighten bolts to cylinder head evenly to specified torque.

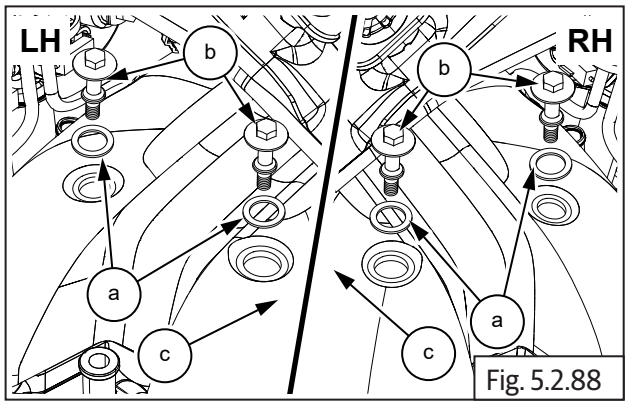

Fig. 5.2.88

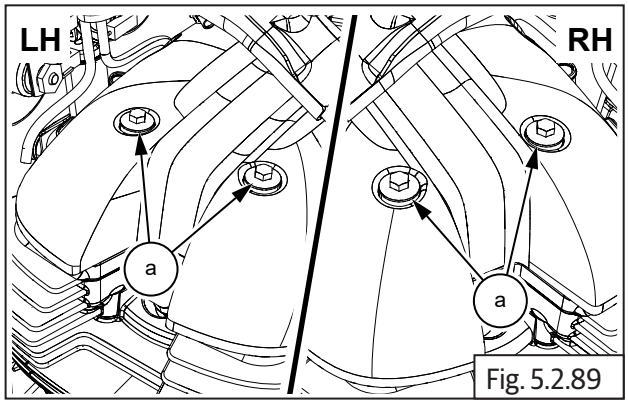

Fig. 5.2.89

	8 mm Socket with Torque wrench
Torque	12 N-m/1.2 kgf-m

5.2.28. Reed Valves

NOTE
• *The reed valve has a rounded edge in one of the corners this should be aligned to the rounded edge in the housing during assembly.*

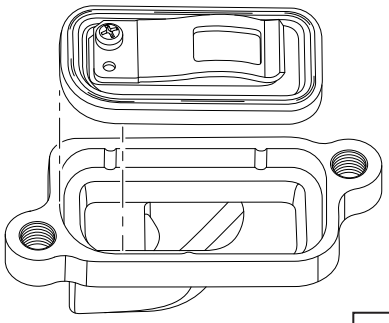

Fig. 5.2.90

- Locate reed valves LH & RH **(a)** in the housings duly ensuring it is seated properly and correctly.
- Assemble new "O" rings **(b)** on either ends of the connection tube and locate the reed valves housings LH & RH on the connection tube duly ensuring the connection tube is fully inserted into the housings.

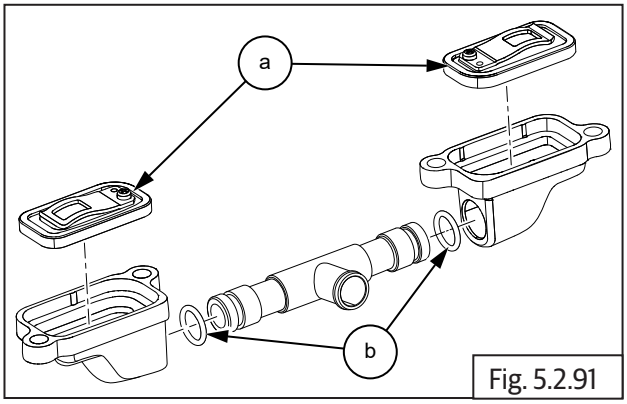

Fig. 5.2.91

- Locate reed valves on cylinder head front side with the hose **(a)** pointing upwards and ensure the mounting holes are aligned.

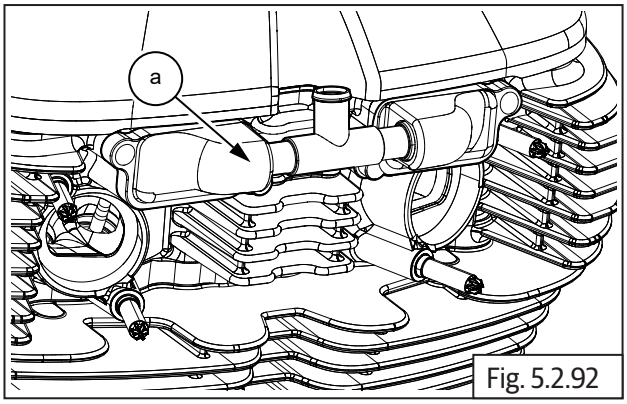

Fig. 5.2.92

- Locate 2 each Hex socket head bolts **(M6) (a)** on the LH and RH reed valves and tighten evenly to specified torque.

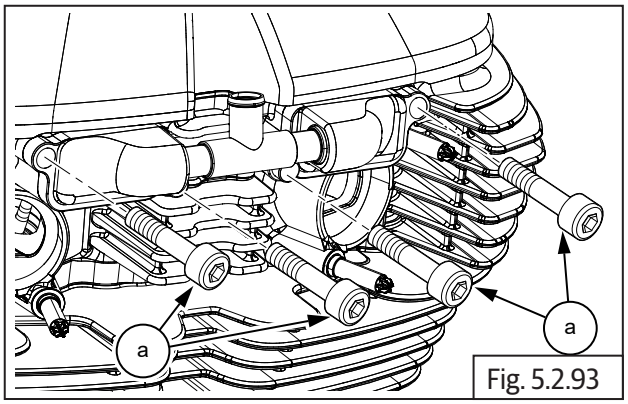

Fig. 5.2.93

	5 mm Allen socket and Torque wrench
Torque	10 N-m/1 kgf-m

5.2.29. Reed Valve Connection

- Connect the hose **(a)** to the reed valve tube.

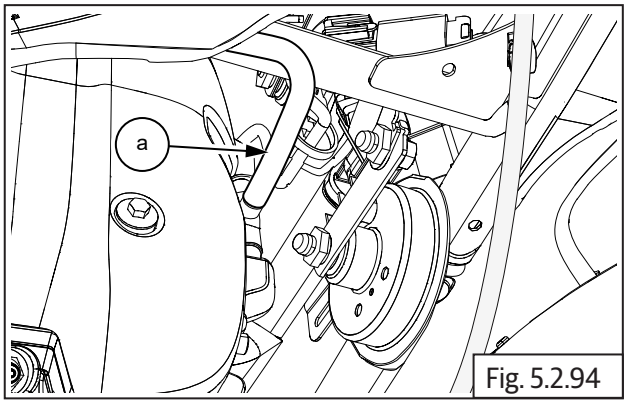

Fig. 5.2.94

5.2.30. Inlet Manifold Rubber Flanges LH & RH

- Locate the 2 Nos. inlet manifold rubber flanges **(a)** on the cylinder heads, duly ensuring the "cut away" in the manifolds are matching with the "cut away" in the cylinder head.

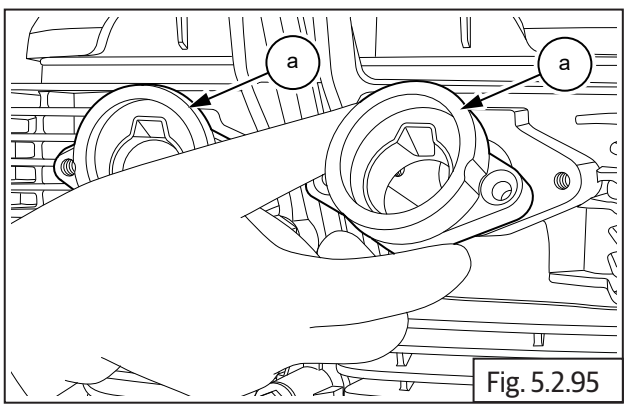

Fig. 5.2.95

- Locate and tighten 2 each countersunk socket head bolts **(M5) (a)** on the inlet manifold rubber flanges LH & RH.

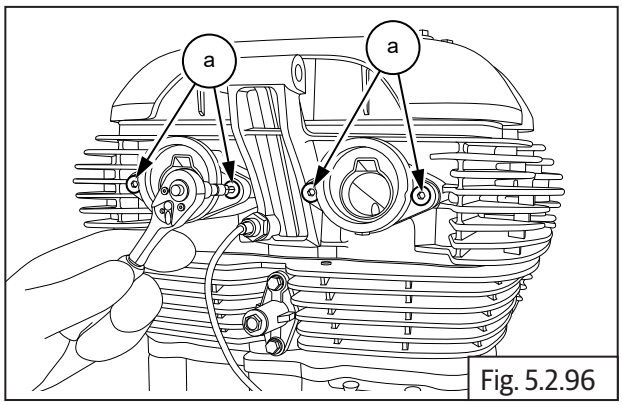

Fig. 5.2.96

	4 mm Allen socket and Torque wrench
Torque	2 N-m/0.2 kgf-m

5.2.31. Throttle Body

- Ensure clips **(a)** are in position on inlet manifolds LH and RH and loosened sufficiently.
- Locate throttle body **(b)** on the inlet manifold **(c)** and ensure it is properly seated on both LH and RH inlet manifolds fully.

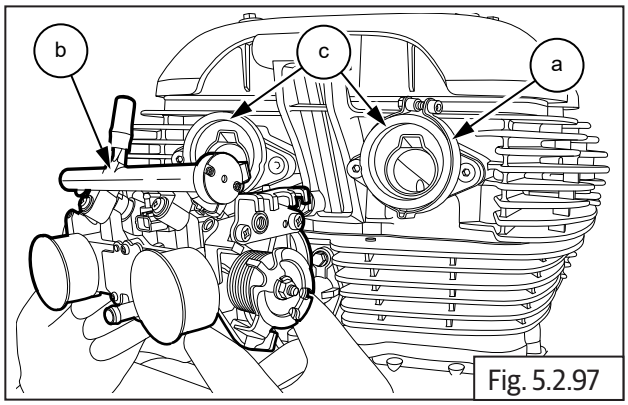

Fig. 5.2.97

- Tighten both clips screws **(M6) (a)** sufficiently over inlet manifolds LH & RH.

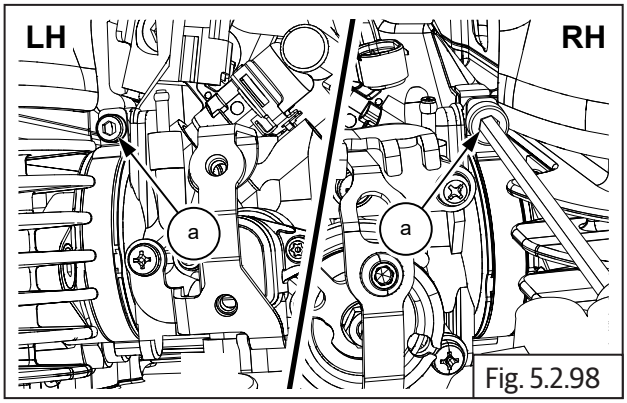

Fig. 5.2.98

	5 mm Allen socket with Ratchet

5.2.32. Air Filter Hoses On Throttle Body

- Ensure clips **(a)** are in position on air filter hoses and loosened sufficiently.
- Locate air filter hoses **(b)** on throttle body **(c)** and ensure they are properly seated on the throttle body.

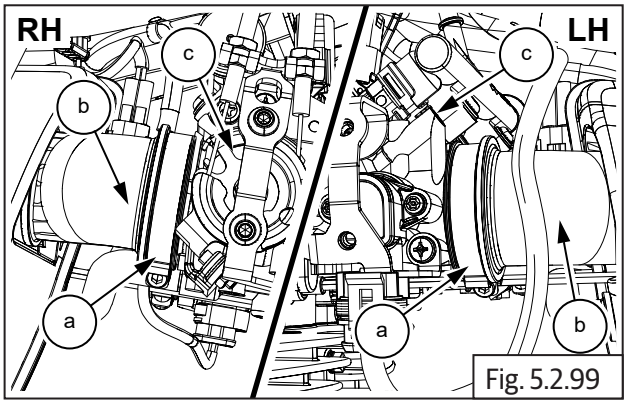

Fig. 5.2.99

- Tighten both clips screws **(M6) (a)** sufficiently over the air filter hoses.

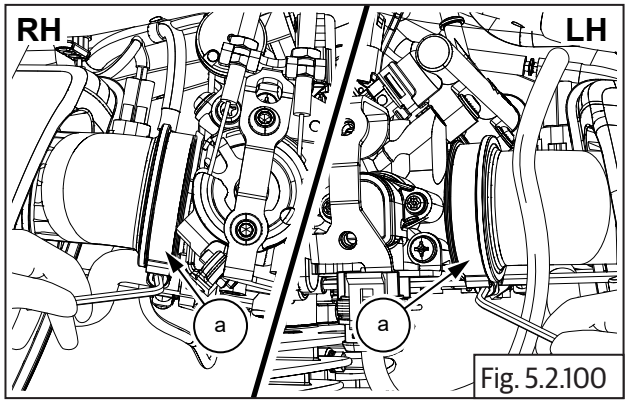

Fig. 5.2.100

	5 mm Allen socket with Ratchet

5.2.33. Throttle Cables

- Assemble throttle cables on throttle body. Refer (section 6.2.3).

5.2.34. Injector, TPS, MAPS, ISC Connections

Injector, Throttle Position Sensor (TPS), Manifold Absolute Pressure Sensor (MAP) and Idle Speed Controller (ISC) Connections

- Connect the LH and RH injector connectors **(a)** located on throttle body **(b)**.

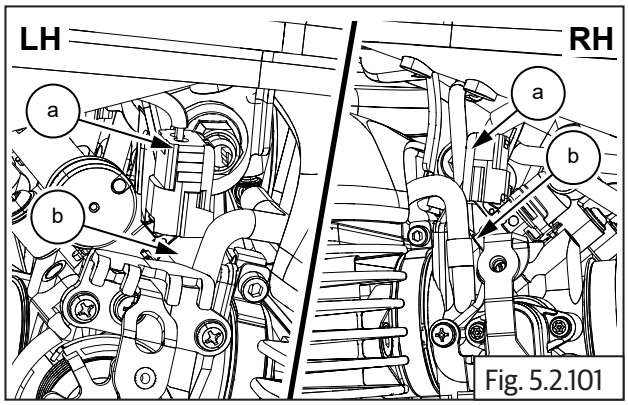

Fig. 5.2.101

- Connect TPS connector **(a)** to sensor **(b)** at bottom of throttle body.

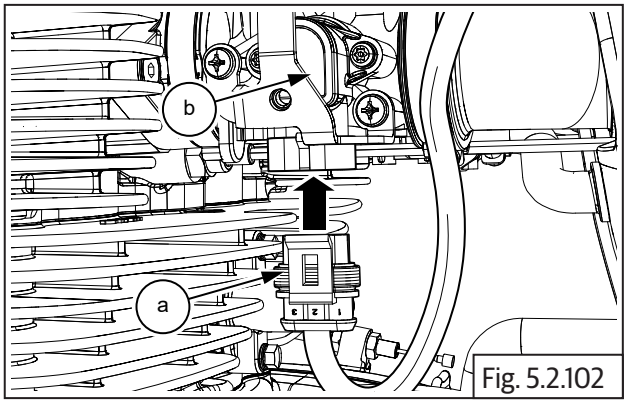

Fig. 5.2.102

- Connect idle speed sensor connector **(a)** on throttle body **(b)**.

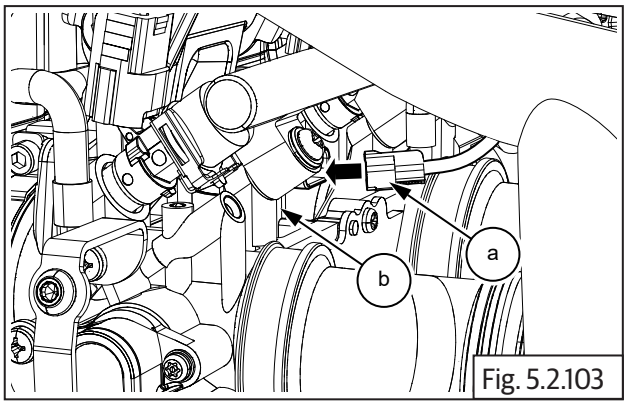

Fig. 5.2.103

- Connect purge valve hoses **(a)** to the inlet pipes on the top of the throttle body.

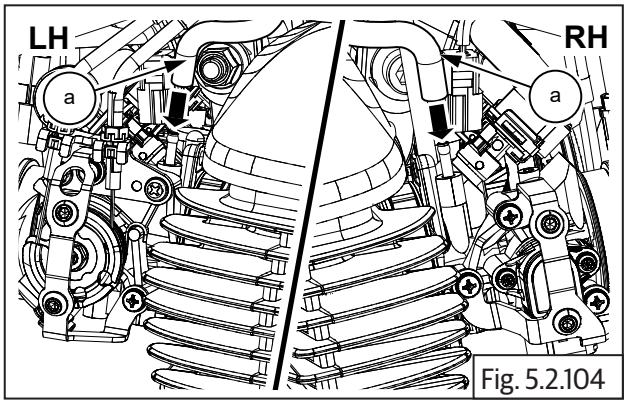

Fig. 5.2.104

5.2.35. Throttle Body Covers on LH and RH

- Locate throttle body covers **(b)** on both LH and RH of throttle body.
- Insert and tighten 2 Nos. Hex Allen bolts **(M5) (a)** into LH throttle body cover **(b)**.
- Insert and tighten 2 Nos. Hex Allen bolts **(M5) (a)** into RH throttle body cover **(b)**.

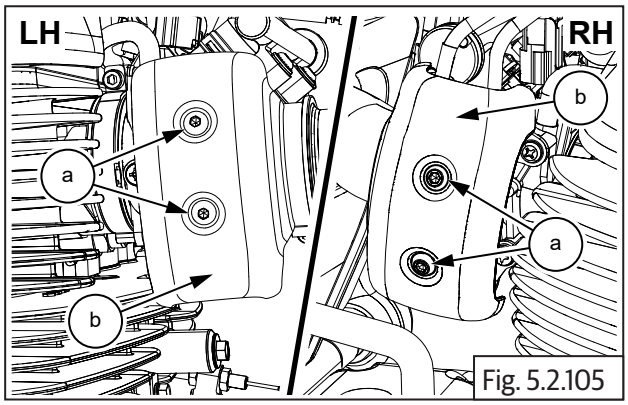

Fig. 5.2.105

	4 mm Allen Key

- Position ABS modulator with bracket on frame and tighten with bolts (section 9.3.10).
- Assemble the following parts:
  - Horn and electrical connections (section 11.7).
  - Connect HT cable.
  - Fuel tank (section 7.1.15).
  - Side panels LH (section 6.7.5).
  - Rider seat assembly (section 6.7.7).
  - Assemble RH side panel. Refer to the (section 6.7.8).

5.2.36. Spark Plugs

- Locate and tighten spark plug **(a)** to RH cylinder head.

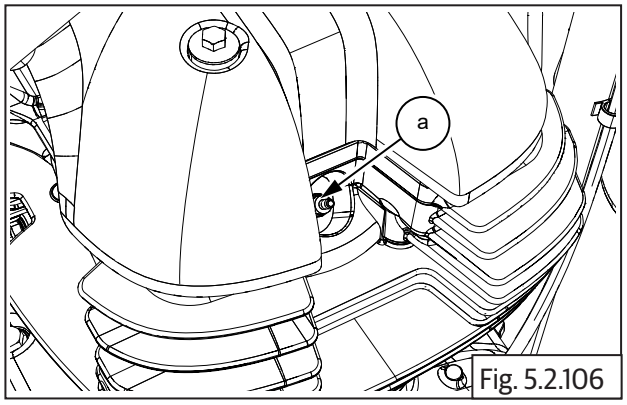

Fig. 5.2.106

	16 mm Socket with Ratchet

- Repeat the procedure to assemble LH spark plug.

5.2.37. Spark Plug Suppressor Caps

Spark Plug Suppressor Caps on LH and RH Cylinder Heads

- Locate spark plug suppressor cap **(a)** on spark plug in LH cylinder head **(b)**.

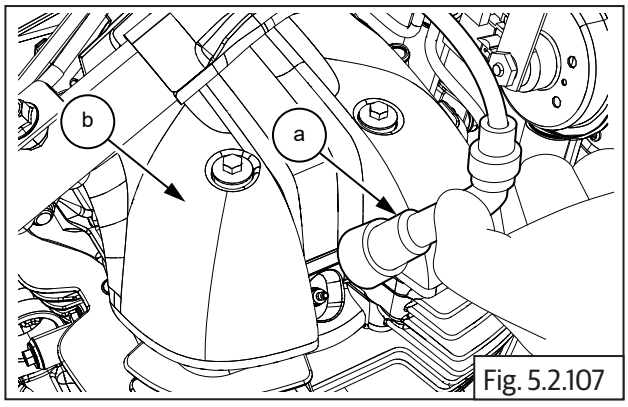

Fig. 5.2.107

- Locate spark plug suppressor cap **(a)** on spark plug in RH cylinder head **(b)**.

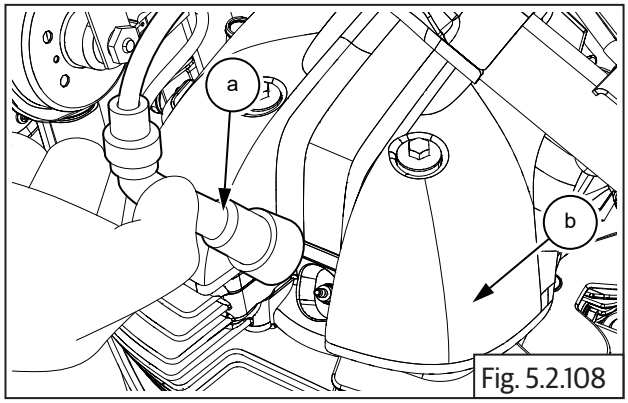

Fig. 5.2.108

5.2.38. Star Index

- Locate and tighten 2 Nos. Hex head bolts **(M6) (a)** on selector fork shaft stopper plate.

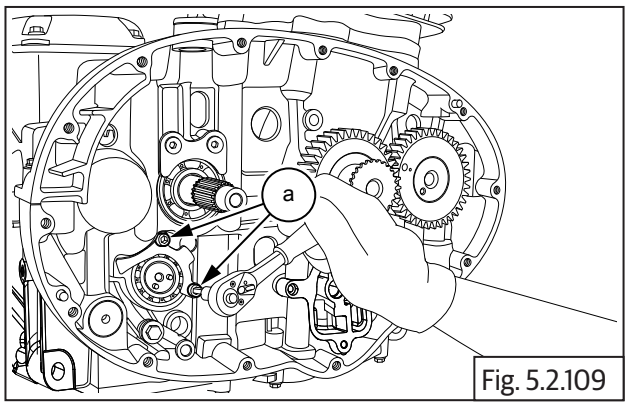

Fig. 5.2.109

	5 mm Allen socket with Torque wrench
Torque	12 N-m/1.2 kgf-m

- Locate and tighten Hex socket head stepped bolt **(M6) (a)** on gear shift cam drum.

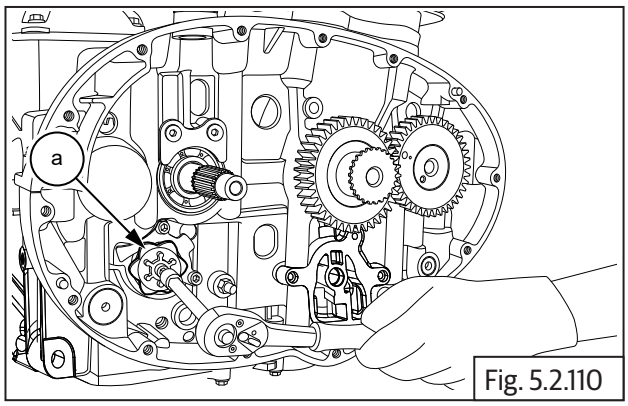

Fig. 5.2.110

	5 mm Allen socket with Ratchet

5.2.39. Star Index Stopper

- Locate spring and stopper plate support **(a)** on RH lower crankcase and assemble Hex head flange bolt **(M6) (b)**.

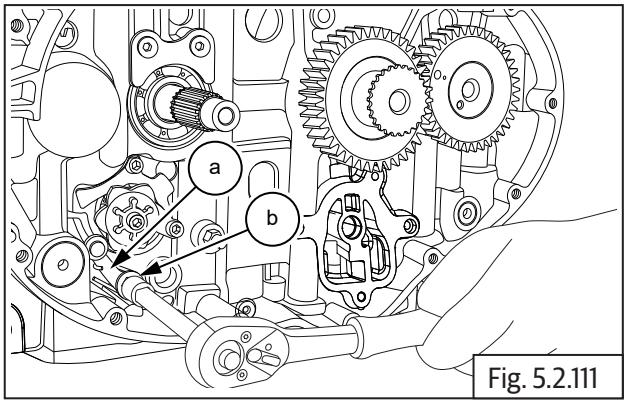

Fig. 5.2.111

	10 mm Socket with Torque wrench
Torque	12 N-m/1.2 kgf-m

NOTE
• *Handle stopper plate tension spring carefully else it may damage supporting components.*

Shifter Selector Shaft Assembly

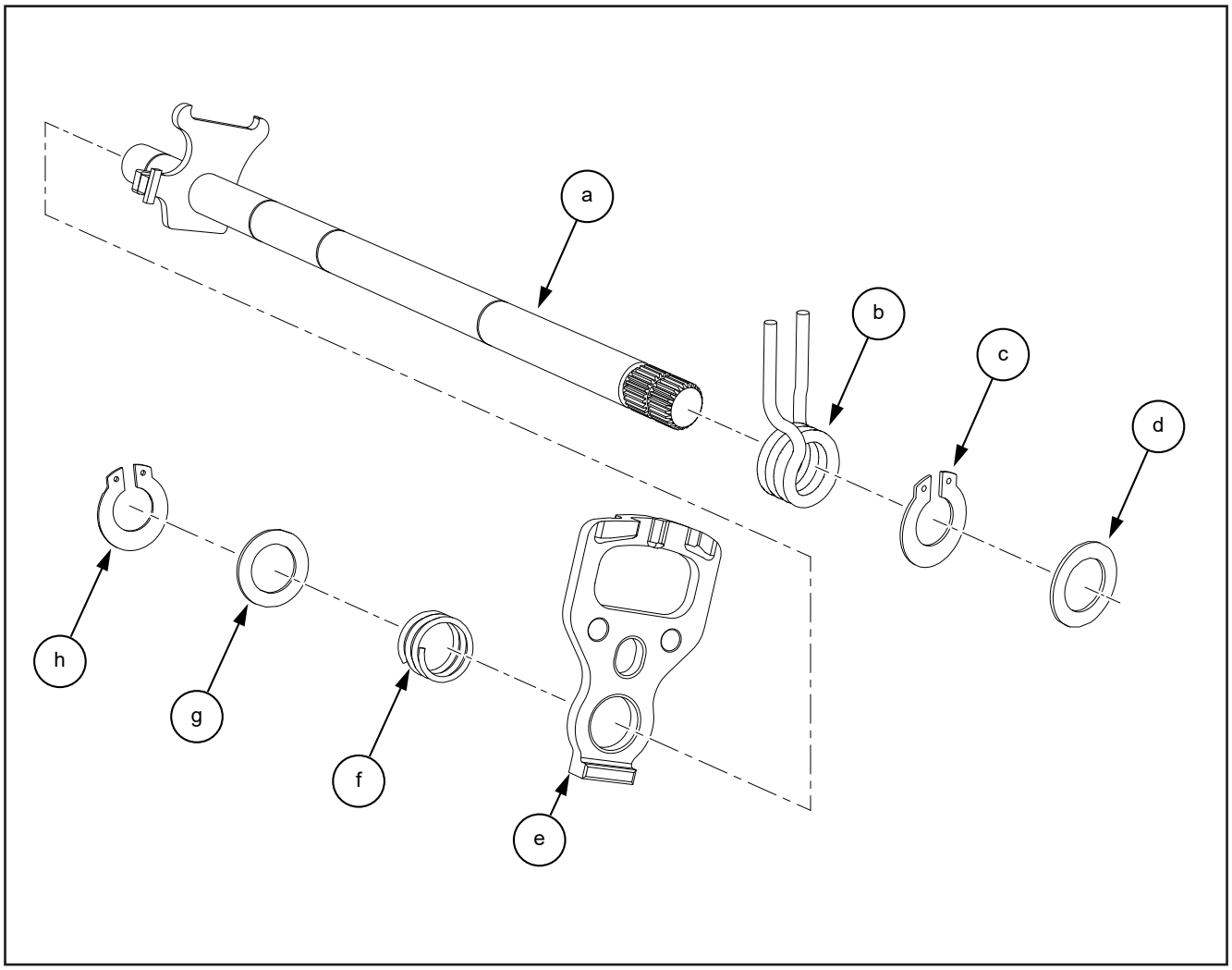

Item No.	Description	Quantity
a	Shifter shaft	1
b	Spring	1
c	Circlip	1
d	Washer	1
e	Outer plate	1
f	Spring	1
g	Washer	1
h	Circlip	1

5.2.40. Shifter Selector Shaft

- Assemble inner spring **(a)** from the longer side of shifter shaft **(b)**.
- Ensure the legs of the spring are correctly located in the plate on the shifter shaft.

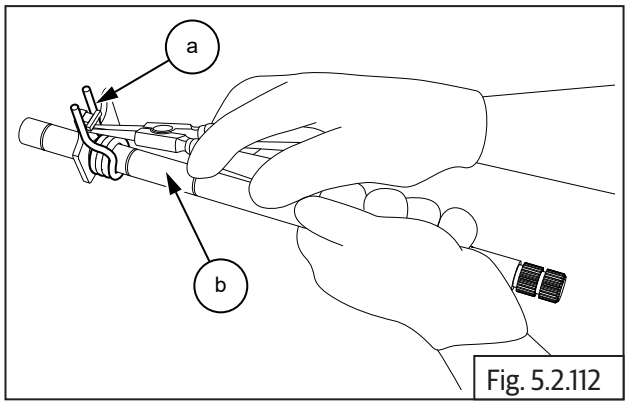

Fig. 5.2.112

	Circlip plier

- Assemble inner circlip **(a)** on longer end of shifter shaft **(b)**. Ensure it is properly seated on shifter shaft groove near the spring.

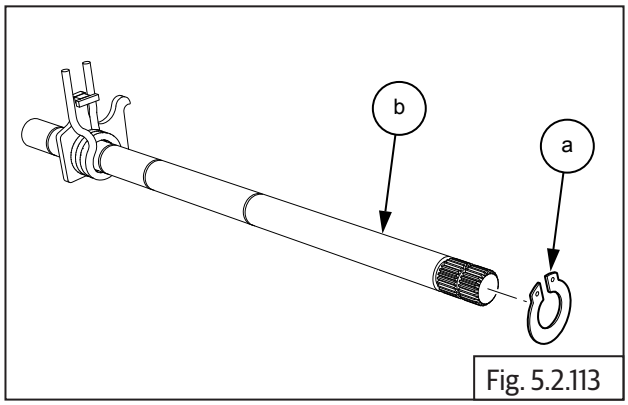

Fig. 5.2.113

	Circlip plier

- Assemble 1st inner washer **(a)** from the longer end of shifter shaft **(b)**.

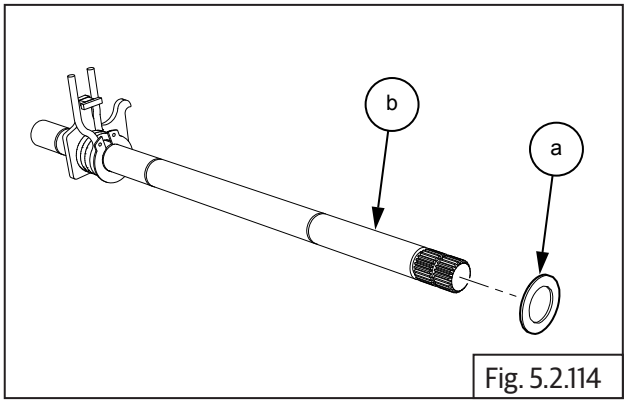

Fig. 5.2.114

- Assemble outer plate **(a)** from smaller end of shifter shaft with its projection facing towards the longer end of the shaft.
- Ensure the peg on the shifter shaft is located correctly in the hole on the outer plate **(a)**.

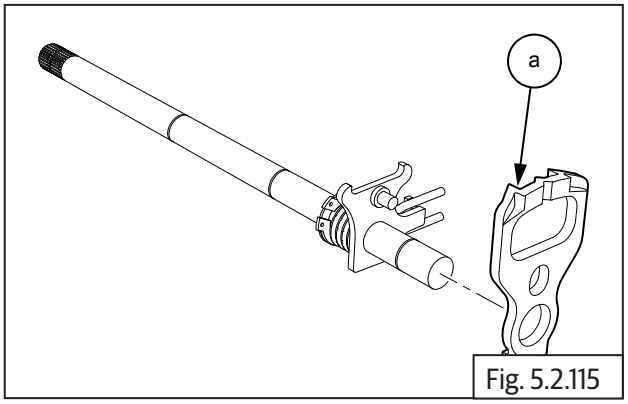

Fig. 5.2.115

- Assemble outer spring **(a)** from smaller end of shifter shaft.

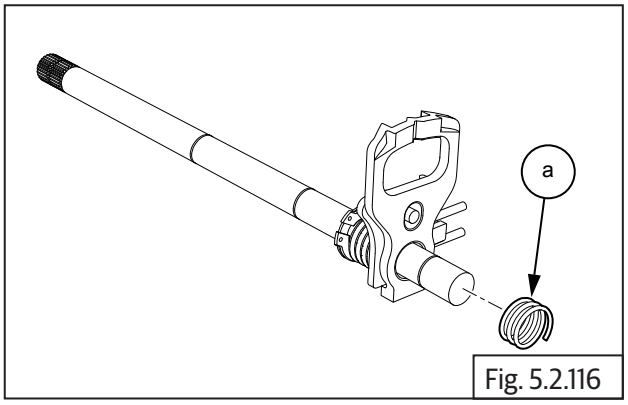

Fig. 5.2.116

- Assemble outer washer **(a)** from the smaller end of shifter shaft.

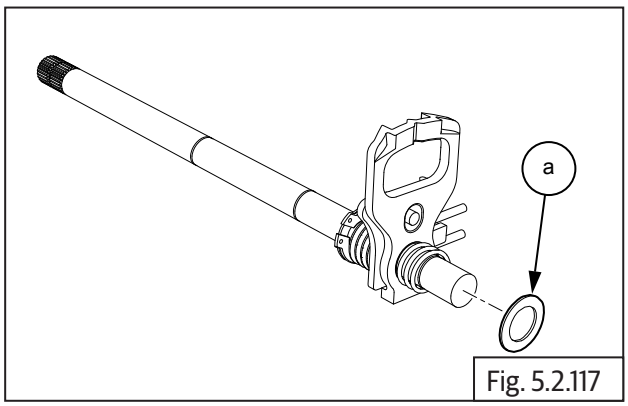

Fig. 5.2.117

- Assemble outer circlip **(a)** from smaller end of shifter shaft.

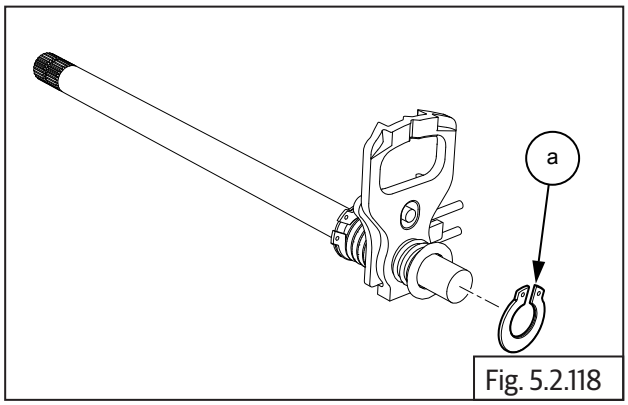

Fig. 5.2.118

	Circlip plier

- Insert longer end of the shifter shaft **(a)** into the hole in the lower crankcase from the RH side.
- Ensure the shifter plate is correctly seated over the star index.

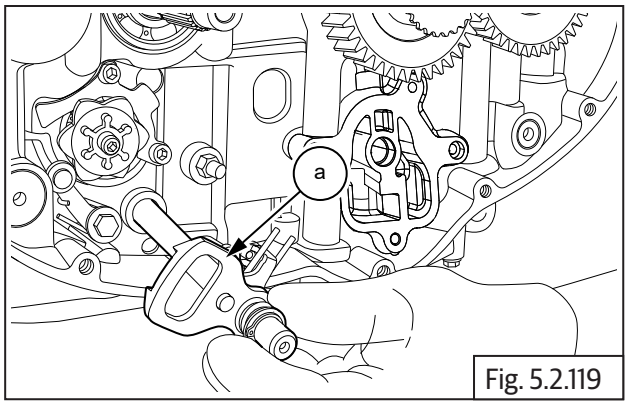

Fig. 5.2.119

- Assemble washer **(a)** on the shifter shaft on the LH side.

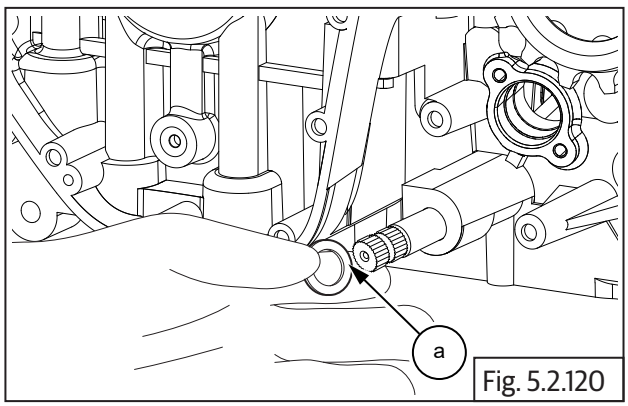

Fig. 5.2.120

- Assemble circlip **(a)** on the shifter shaft at the LH side and ensure it is correctly seated and locked in the groove on the shifter shaft.

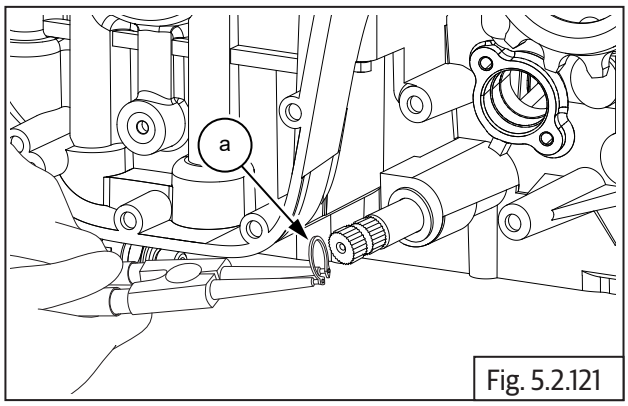

Fig. 5.2.121

	Circlip plier

5.2.41. Oil Pump

- Locate oil pump mounting point below crankshaft gear in RH crankcase.
- Assemble 4 Nos. Hex flange head bolts **(M6) (a)** on oil pump **(b)** and tighten bolts to specified torque.

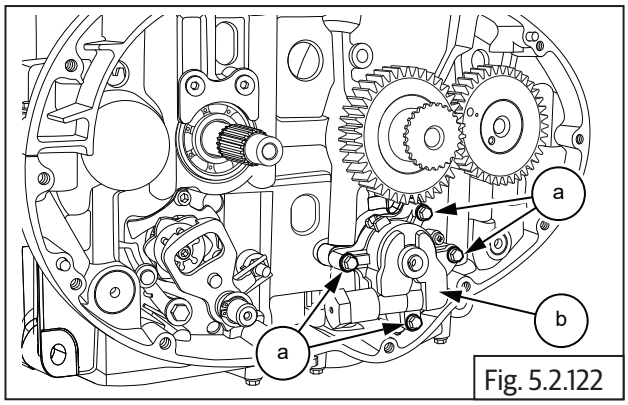

Fig. 5.2.122

	10 mm Socket with Ratchet
Torque	12 N-m/1.2 kgf-m

- Locate and fit oil pump drive chain **(a)** on crankshaft gear **(b)** and sprocket on oil pump.

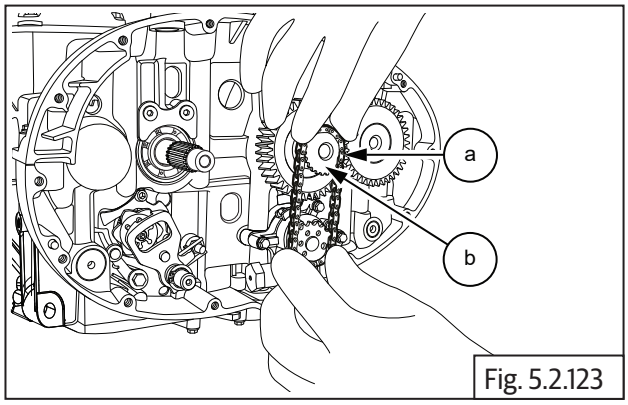

Fig. 5.2.123

- Locate Hex flange head bolt **(M6) (a)** on oil pump. **DO NOT TIGHTEN FULLY**.

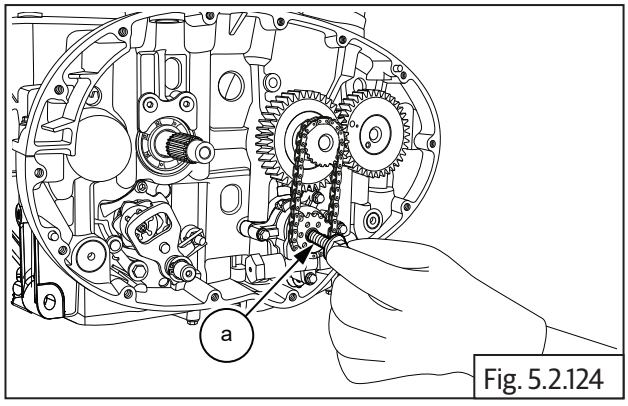

Fig. 5.2.124

- Tighten the bolt to specified torque.

NOTE
• *Lock the crank shaft by using special tool to prevent rotation while tightening bolt.*

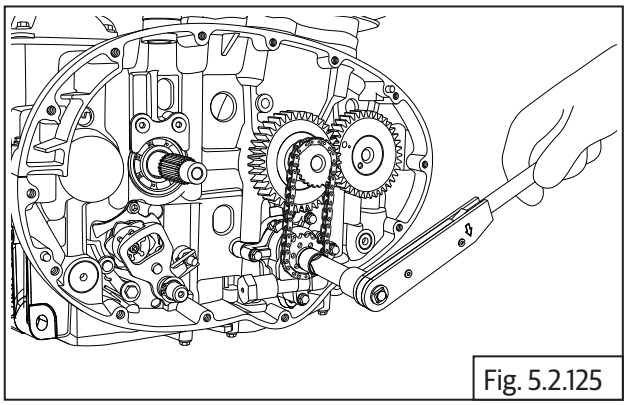
Fig. 5.2.125

	10 mm Socket with Torque wrench
Torque	12 N-m/1.2 kgf-m

5.2.42. Clutch Assembly

- Ensure collar on bush **(a)** is facing inward and assemble it on countershaft **(b)**. Ensure it is seated properly.

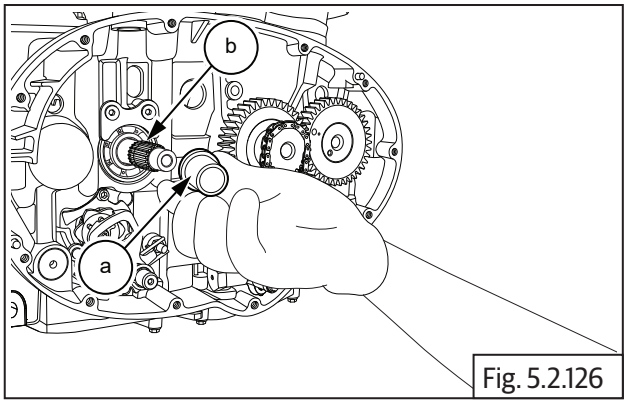

Fig. 5.2.126

- Assemble needle bearing **(a)** on countershaft **(b)**.

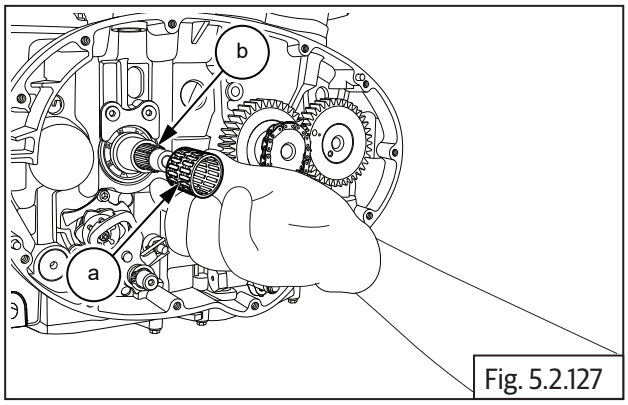

Fig. 5.2.127

- Locate clutch housing **(a)** on counter shaft, with its lugs **(b)** facing outside.
- Ensure the clutch housing gear is correctly meshed with the gear on crankshaft.

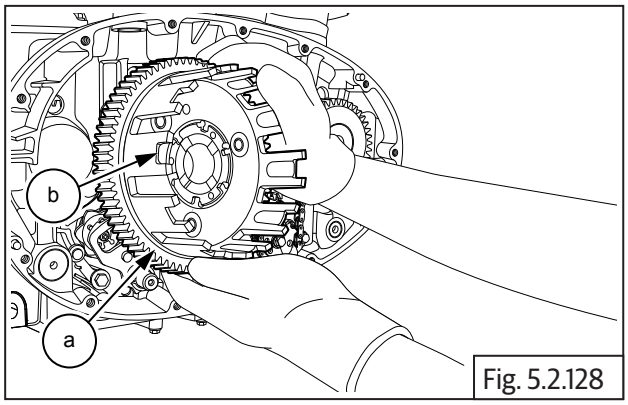

Fig. 5.2.128

- Assemble thrust washer **(a)** on countershaft.

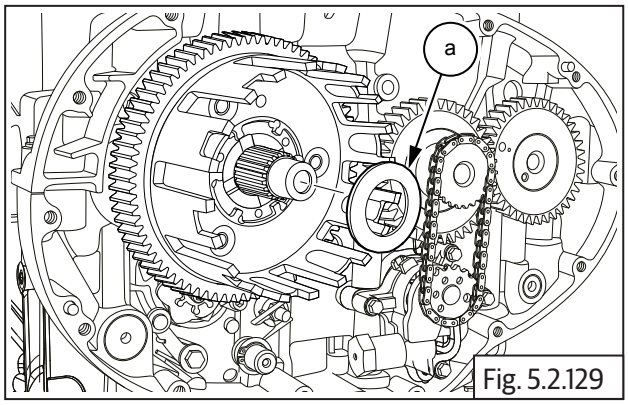

Fig. 5.2.129

- Locate bell assembly **(a)** on the splines on counter shaft **(b)**.

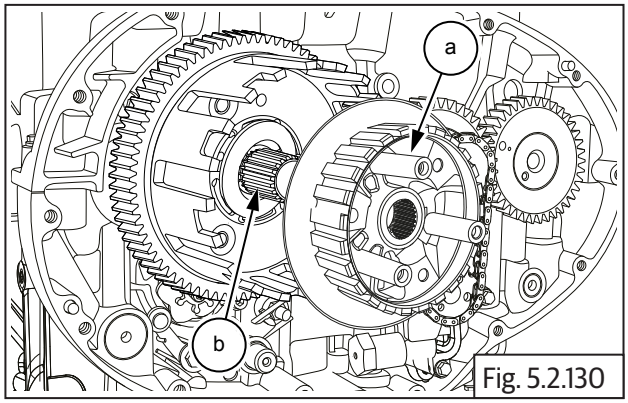

Fig. 5.2.130

- Locate the anti-judder steel washer-plain, in the groove in the clutch bell.
- Assemble Belleville washer over judder washer in the clutch bell. ENSURE THE "HUMP" OF THE BELLEVILLE WASHER IS FACING INSIDE AND SEATED AGAINST THE JUDDER WASHER.
- Assemble 1st friction plate with larger ID (less friction area) ensuring the splines of the plate are correctly positioned and located on the clutch housing.
- Assemble 1st steel plate ensuring the splines on the plate are correctly positioned and located on the clutch bell.
- Assemble 2nd friction plate on the clutch housing and ensure it is seated against the 1st steel plate.
- Assemble 2nd steel plate on clutch bell.
- Assemble 3rd friction plate on clutch housing.

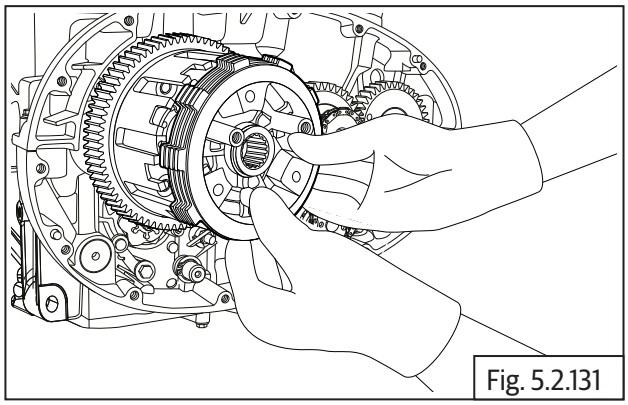
Fig. 5.2.131

- Assemble washer **(a)** on countershaft.

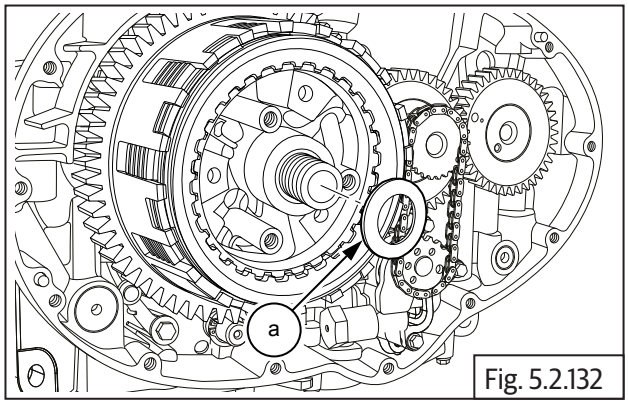

Fig. 5.2.132

- Locate the Hex "U" nut **(M17) (a)**.

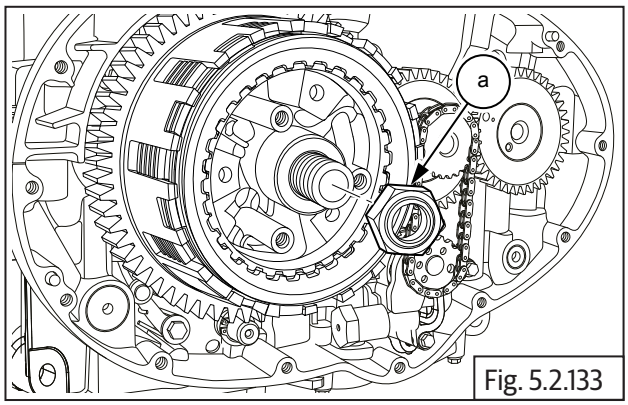

Fig. 5.2.133

⚠ CAUTION
Hex U nut is left hand thread. Turn anticlockwise to tighten nut on shaft.

- Locate and hold special tool on clutch assembly and tighten clutch hub nut to specified torque.

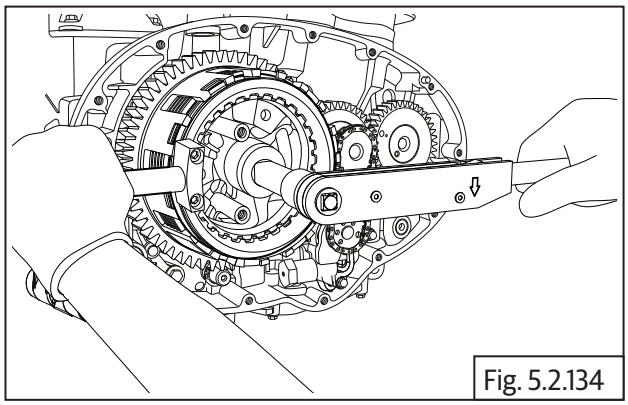
Fig. 5.2.134

SPL 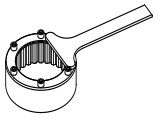	Part No: ST-27558-1
	Part Name: Clutch plate holder with Torque wrench
Torque	120 N-m/12 kgf-m

- Remove special tool and further assemble the following
  - 3rd steel plate on clutch bell.
  - 4th Friction plate on clutch housing.
  - 4th steel plate on clutch bell.
  - 5th Friction plate on clutch housing.
  - 5th steel plate on clutch bell.

- Locate 6th friction plate **(a)** with larger ID (less friction area) on clutch hub **(b)** and ensure it is seated properly against the inner face of the clutch hub.

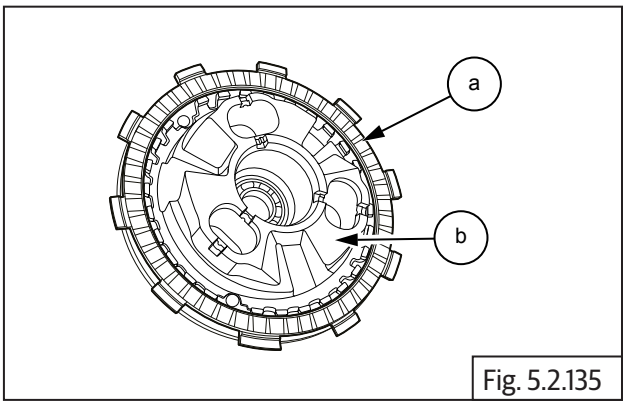

Fig. 5.2.135

- Locate 6th steel plate **(a)** on the splines in clutch hub **(b)** and ensure it is properly seated against the 6th friction plate.

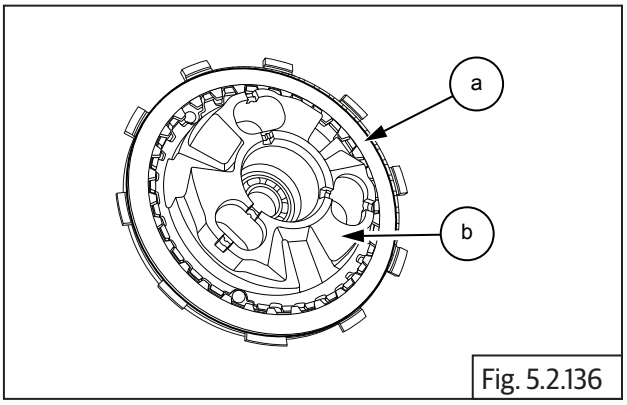

Fig. 5.2.136

- Locate 7th friction plate **(a)** with larger ID (less friction area) on clutch hub **(b)** such that its lugs are offset and between 2 lugs of the 6th friction plate.

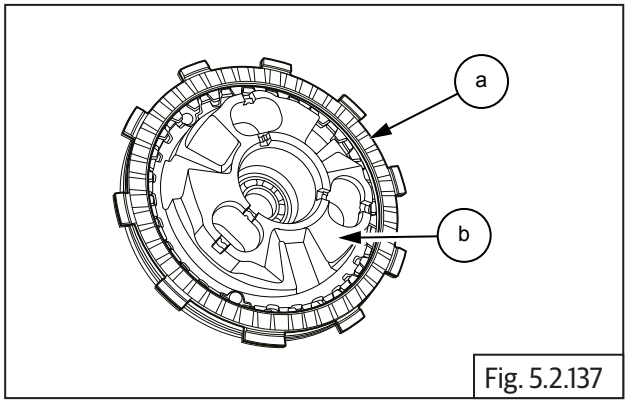

Fig. 5.2.137

- Locate clutch hub **(a)** into clutch bell duly ensuring the following
- Insert pull rod **(b)** into clutch housing from the inside, such that the serrations on the pull rod are facing outside.
- Ensure pull rod is fully and properly seated against the bearing on the inside.

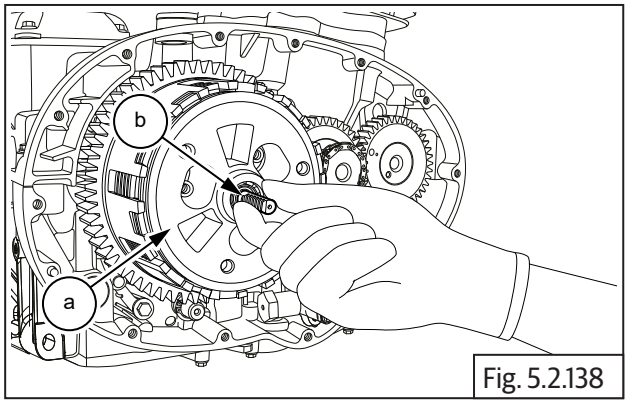

Fig. 5.2.138

- The outer lugs of 7th friction plate are correctly located in the INNER slots of the clutch housing.
- The outer lugs of 6th friction plate are correctly located in the OUTER slots of the clutch housing.
- The 3 lugs of the clutch hub are correctly positioned between the 3 slots in the clutch bell (Gently rotate clutch hub back and forth, to match the slots of the clutch bell).
- The three mounting studs of the clutch bell are central to the slots in the clutch hub.
- Insert 3 Nos. compression springs **(a)** in hub.

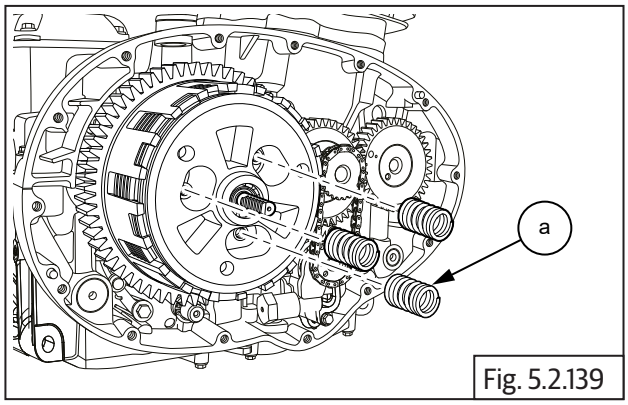

Fig. 5.2.139

- Locate pressure plate **(a)** on clutch hub with the words **"OUT"** and **"FR"** facing outside.
- Assemble 3 Nos. Hex bolts **(M6) (b)** and tighten pressure to clutch hub, sequentially to specified torque.

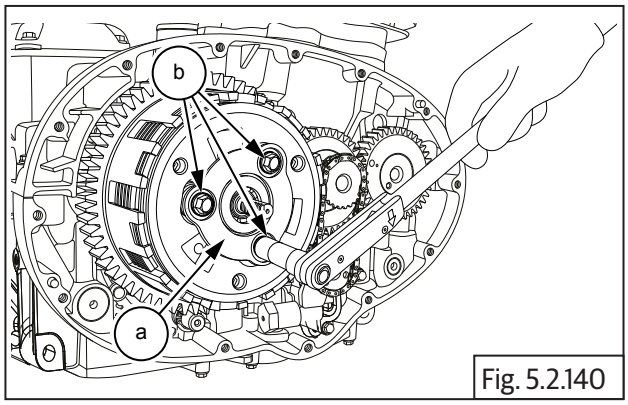

Fig. 5.2.140

	10 mm Socket with Torque wrench
Torque	10 N-m/1 kgf-m

5.2.43. Oil Level Window on Clutch Cover

- Locate new oil window **(a)** on clutch cover with the window facing towards clutch cover outer and gently press till it is seated fully inside.

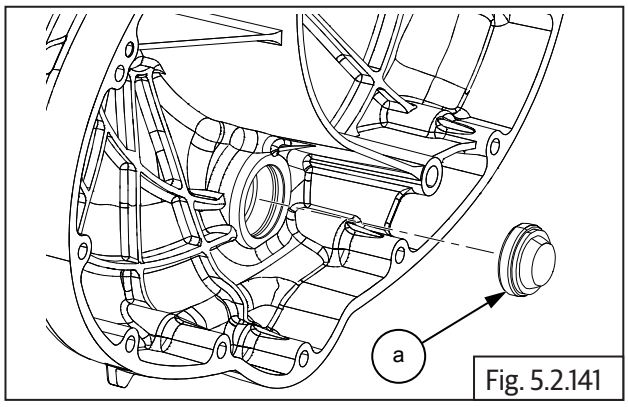

Fig. 5.2.141

- Assemble circlip **(a)** in the groove in clutch cover and ensure it is correctly locked in the clutch cover.

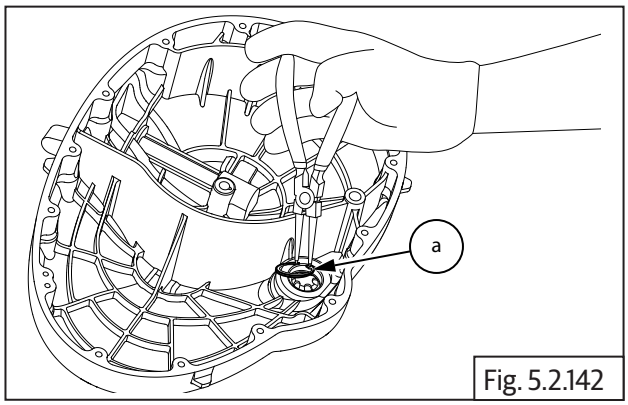

Fig. 5.2.142

	Circlip plier

5.2.44. Clutch Actuating Lever Assembly

- Ensure needle bearings **(a)** are assembled in the clutch cover.

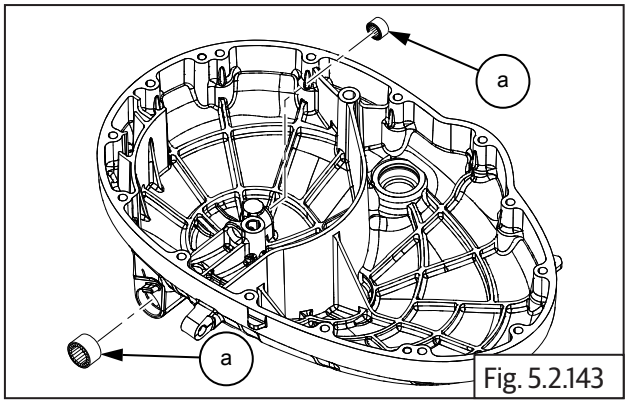

Fig. 5.2.143

SPL 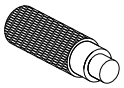	Part No: ST30262/a
	Part Name: Clutch act lever top BRG Inst

SPL 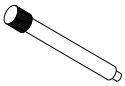	Part No: ST30261/a
	Part Name: Clutch act lever btm BRG Inst

- Insert clutch actuating shaft **(a)** into clutch cover **(b)** with the gear facing inside and the splines facing outside.

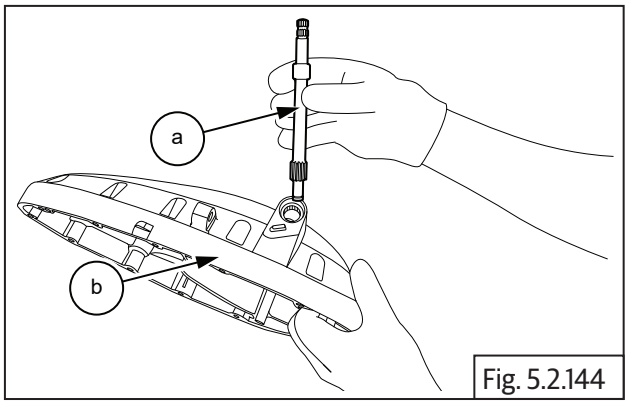

Fig. 5.2.144

- Assemble washer **(b)** on the shaft bottom inside the clutch cover.
- Assemble E-clip **(a)** in the slot in shaft bottom inside clutch cover.

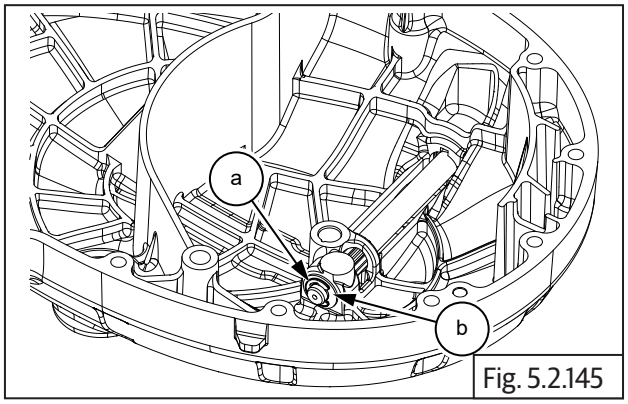

Fig. 5.2.145

	Nose plier

- Assemble oil seal **(a)** in clutch cover at the top with the lips facing down.
- Assemble washer **(b)** above oil seal.

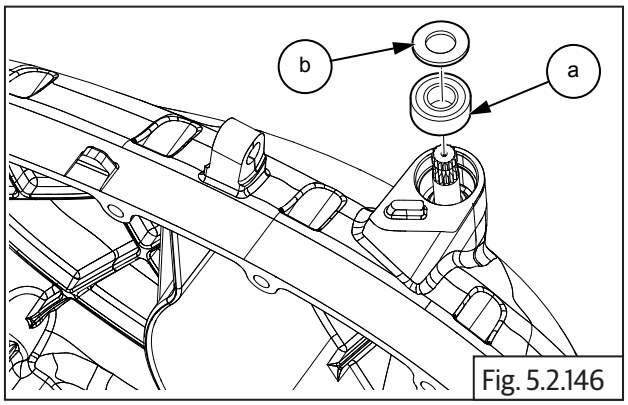

Fig. 5.2.146

5.2.45. Clutch Cover

- Ensure the dowel pins **(a)** are seated properly on the upper and lower crankcases on RH side.

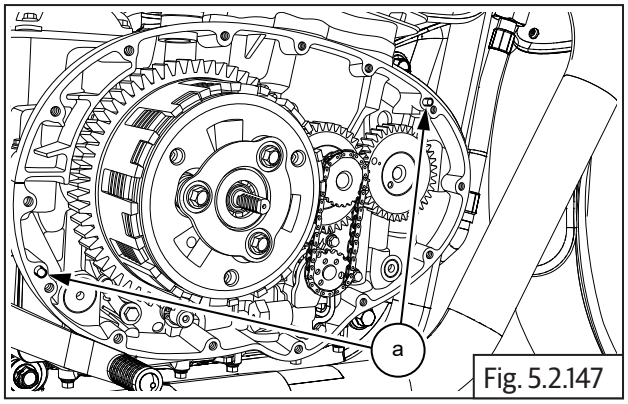

Fig. 5.2.147

- Install gasket **(a)** on the crankcase if necessary smear engine oil and ensure it is properly seated on dowels. **Do not use any sealant OR adhesive**.

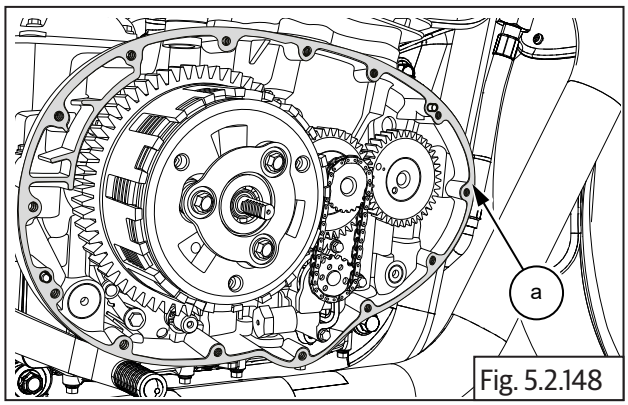

Fig. 5.2.148

- Ensure racks on the clutch pull rod is facing towards the rear of the engine.
- Hold the clutch cover **(a)** in position, rotate the clutch actuating shaft to ensure it is engaged correctly with the pull rod and gently tap cover inside, till it seats fully on the dowels and crankcase.

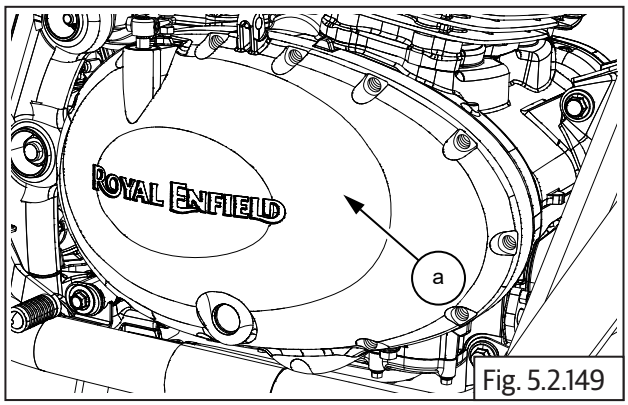

Fig. 5.2.149

- Locate 14 Nos. Hex socket bolts **(M6) (a)** on clutch cover and tighten them in crisscross pattern.

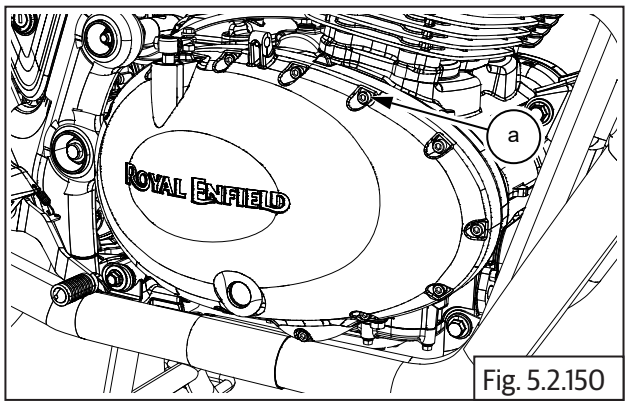

Fig. 5.2.150

	5 mm Allen socket with Ratchet

- Tighten bolts **(M6) (a)** evenly to specified torque.

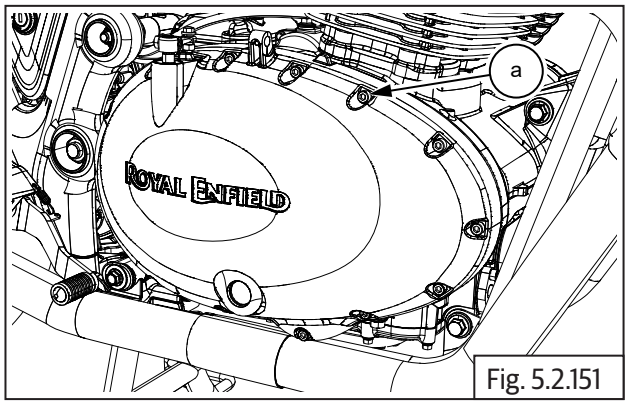

Fig. 5.2.151

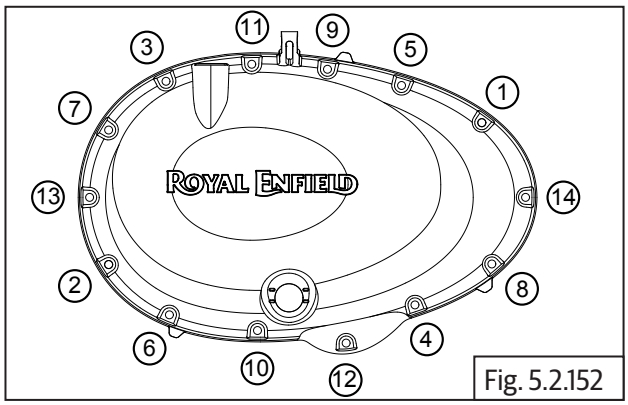

Fig. 5.2.152

	5 mm Allen socket with Torque wrench
Torque	12 N-m/1.2 kgf-m

5.2.46. Arm Clutch Actuating Lever

- Assemble clutch release spring **(a)** on shaft with the "L" bend positioned against the lug **(b)** in clutch cover.

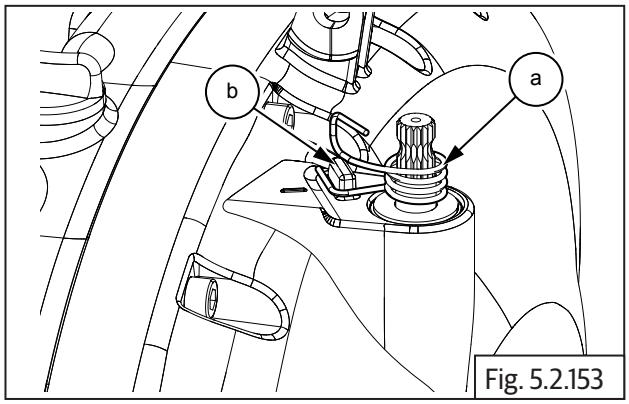

Fig. 5.2.153

- Rotate clutch shaft **(b)** clockwise till it stops.
- Ensure pinch bolt is sufficiently loose, position actuating lever on shaft at 11 'O' clock position and ensure the inner side of the lever is aligned to the reference mark **(a)** on the clutch cover.

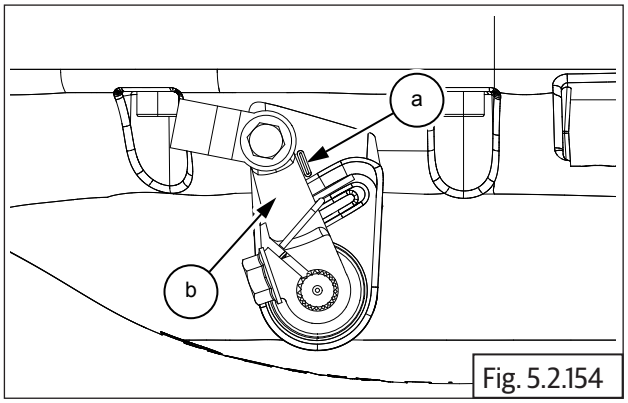

Fig. 5.2.154

- Tighten pinch bolt sufficiently such that the lever is firmly clamped on the shaft.
- Position the upper leg of the spring against the inside of the lever and check for proper spring action.

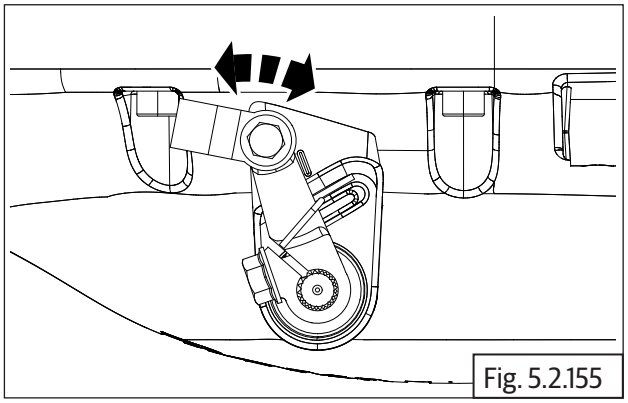
Fig. 5.2.155

5.2.47. Clutch Cable on Clutch cover

- Assemble clutch cable assembly **(a)** on clutch lever **(b)**. Refer clutch cable assembly procedure (section 6.2.5).

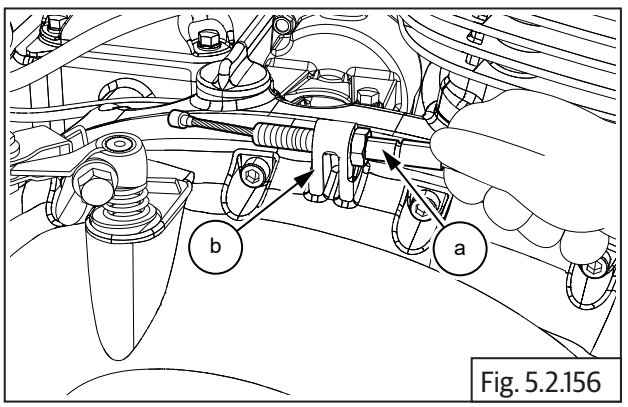

Fig. 5.2.156

5.2.48. FD Sprocket

- Assemble spacer **(a)** on drive shaft **(b)** on the LH side.

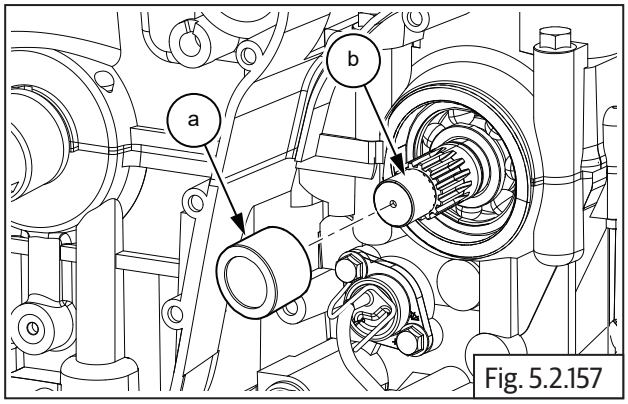

Fig. 5.2.157

- Locate oil seal **(a)** on the crankcase on LH side with its open end facing inwards and tap it in gently till the outer surface of the oil seal is flush with the crankcase**(b)**.

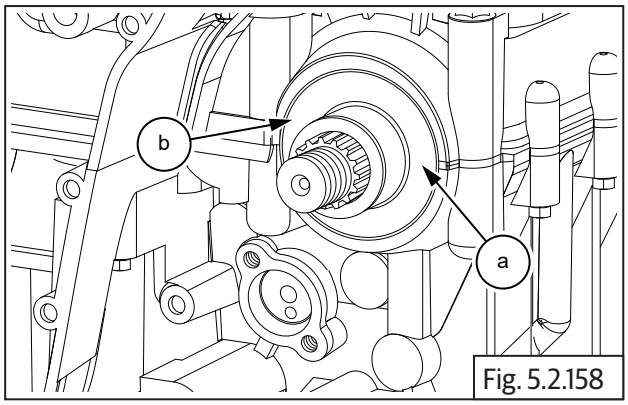

Fig. 5.2.158

- Assemble FD sprocket **(a)** on drive shaft **(b)**.

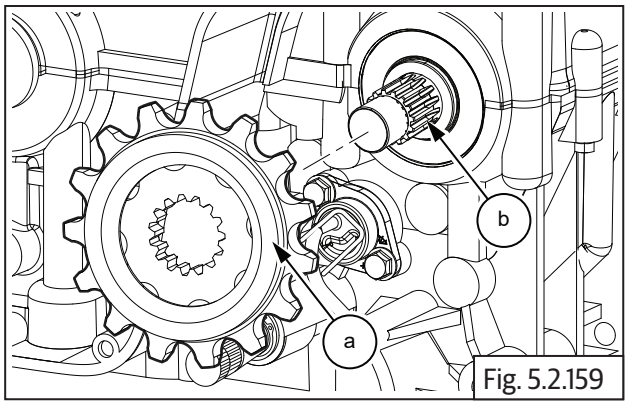

Fig. 5.2.159

- Install new tab washer **(a)** on drive shaft **(b)**.

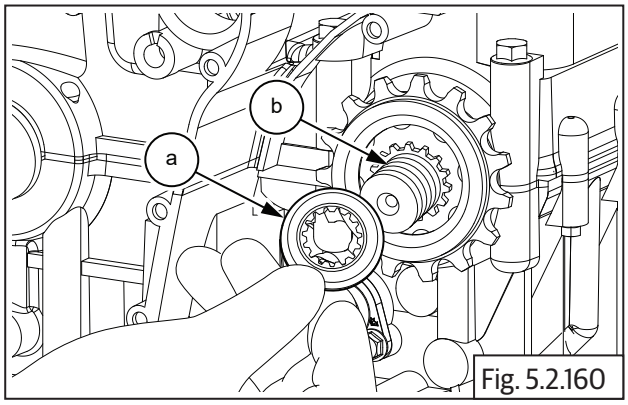

Fig. 5.2.160

- Assemble FD Sprocket "U" nut **(M20) (a)** on drive shaft.

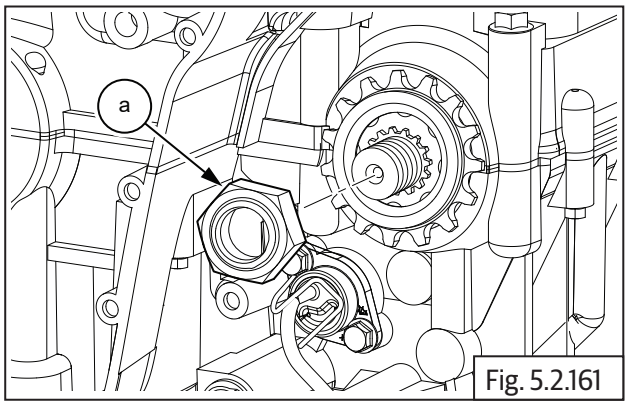

Fig. 5.2.161

- Locate special tool **(a)** over FD sprocket and tighten nut to specified torque.

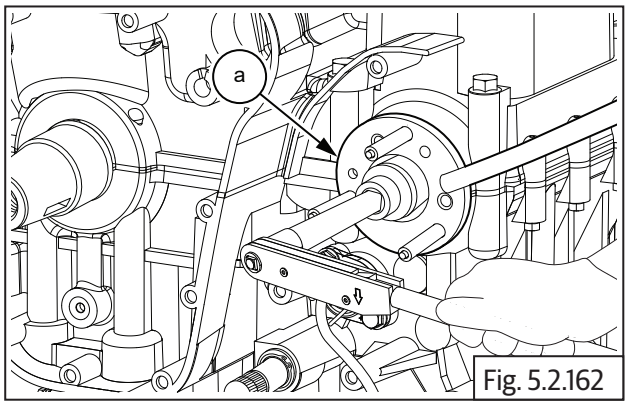

Fig. 5.2.162

SPL 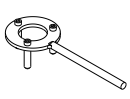	Part No: ST-27534-2
	Part Name: FD Sprocket holder

	30 mm Socket with Torque wrench
Torque	145 N-m/14.5 kgf-m

- Gently bend the tab washer **(a)** outer, to seat against a flat surface of the hex nut **(b)** with a flat chisel to prevent the nut from loosening during use.

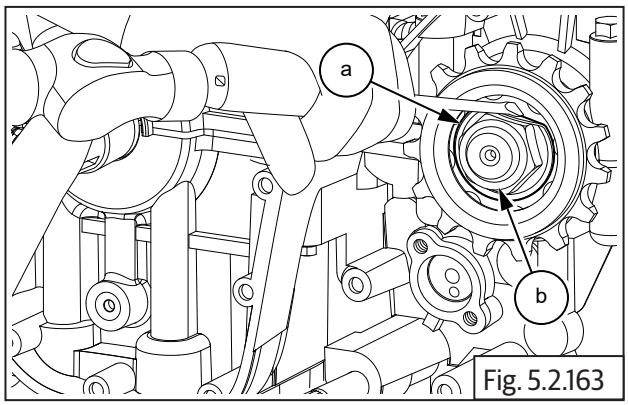

Fig. 5.2.163

	Chisel and Hammer

5.2.49. Rear Chain to FD Sprocket

- Locate drive chain **(a)** over the FD sprocket teeth **(b)**.

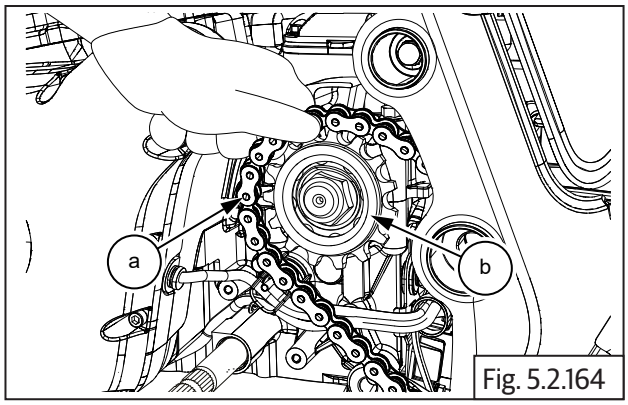

Fig. 5.2.164

- Ensure rear chain is properly seated on the rear wheel sprocket.
- Adjust rear chain tension as specified. Refer (Section 6.8.10).

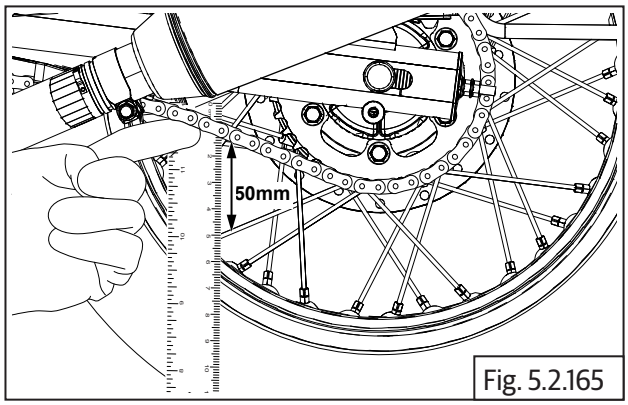

Fig. 5.2.165

5.2.50. Gear Position Sensor (GPS)

- Assemble gear position sensor on the LH side of lower crankcase duly ensuring the lug **(a)** in the GPS is located into the hole **(b)** in gear selector drum.

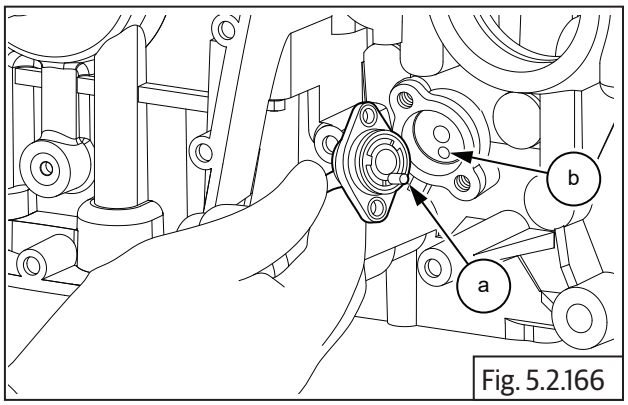

Fig. 5.2.166

- Position cable holder **(a)** over the GPS.

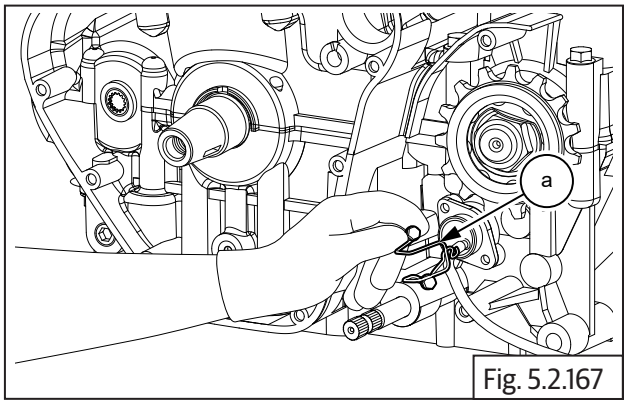

Fig. 5.2.167

- Assemble 2 nos Hex flange head bolts **(M6) (a)** on the cable holder and tighten cable holder and GPS to the crankcase on the LH side to specified torque.

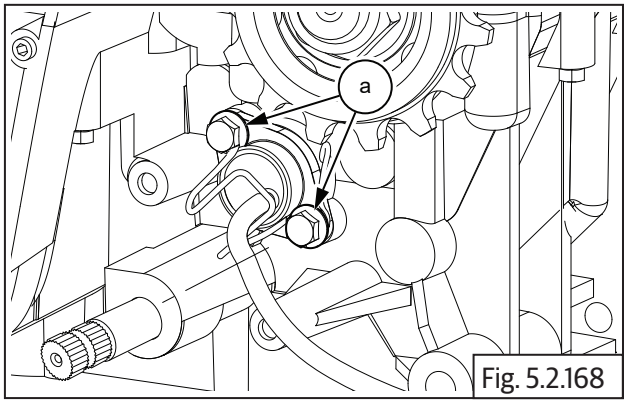

Fig. 5.2.168

	10 mm Socket with Torque wrench
Torque	12 N-m/1.2 kgf-m

5.2.51. Magneto Cover Sub Assembly

Stator coil with CPS in magneto cover

- Position stator coil **(a)** inside magneto cover such that
  - The crank position sensor (CPS) is seated at its mounting location.
  - Magneto wires and grommet are aligned to the slot on the top of the cover.
  - The stator mounting holes are aligned to the mounting holes in magneto cover.
- Locate 3 Nos. Hex socket head bolts **(M6) (b)** in the stator coil mounting holes and tighten evenly to specified torque.

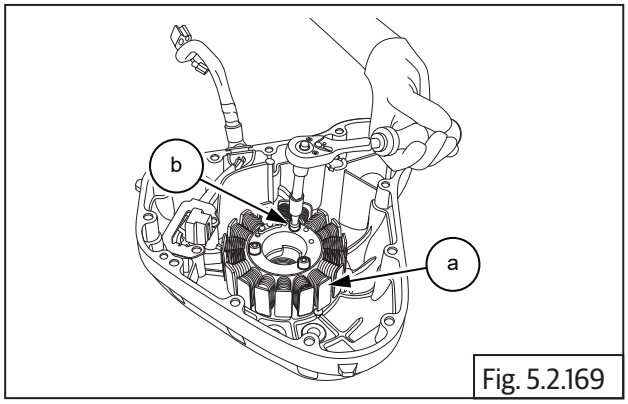

Fig. 5.2.169

	5 mm Allen socket with Ratchet and Torque wrench
Torque	12 N-m/1.2 kgf-m

- Locate guide plate **(b)** over the CPS **(a)**, ensure the mounting holes of the guide plate, CPS are aligned to the mounting holes in magneto cover.
- Locate 2 Nos. Hex socket head screws **(M5) (c)** on the guide plate and tighten evenly to specified torque.

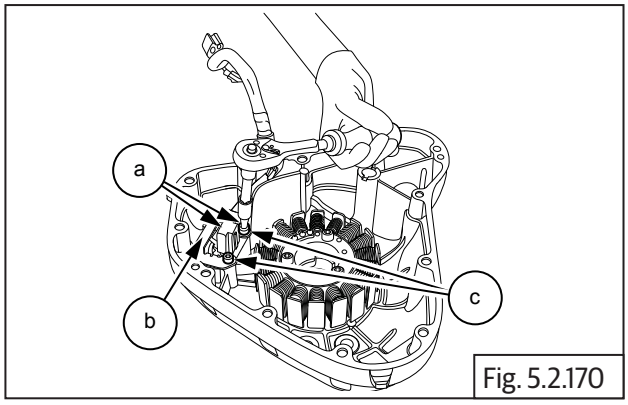

Fig. 5.2.170

	4 mm Allen socket with Ratchet and Torque wrench
Torque	10 N-m/1 kgf-m

5.2.52. Magneto Cover on Crankcase

- Locate dowel pins **(a)** into crankcase.

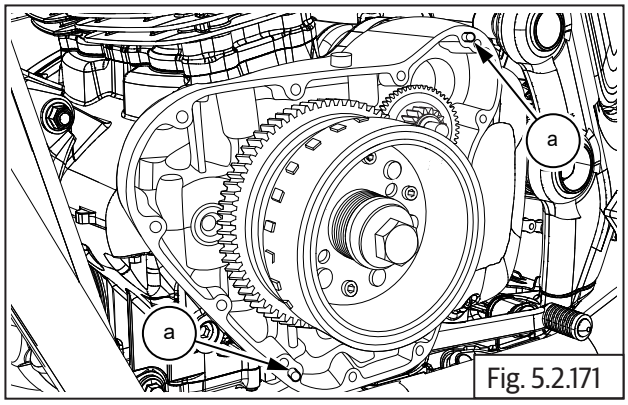

Fig. 5.2.171

- Install Gasket **(a)**.

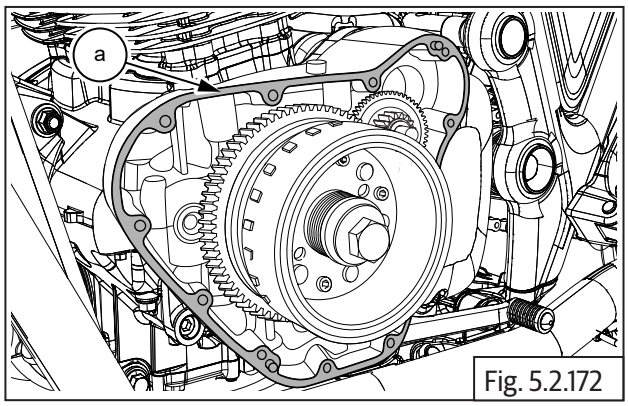

Fig. 5.2.172

- Locate magneto cover on the crankcase on LH side and ensure it is properly and fully seated.

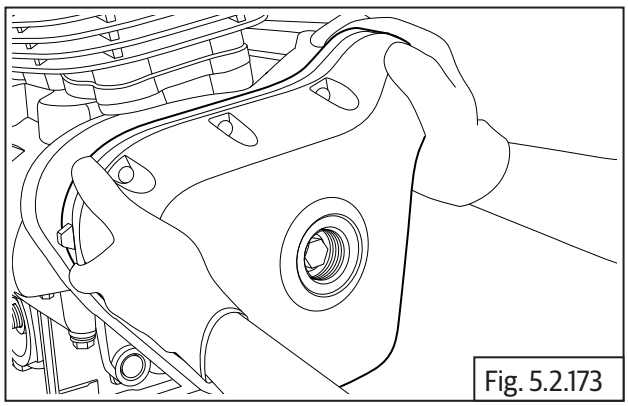

Fig. 5.2.173

⚠ CAUTION

Magnetic forces from the rotor may cause the cover to seat misaligned against crankcase.

Please ensure proper seating of the cover on the crankcase.

- Locate 12 Nos. Hex socket bolts **(M6)** on magneto cover LH cover and tighten in a crisscross pattern evenly and to specified torque.

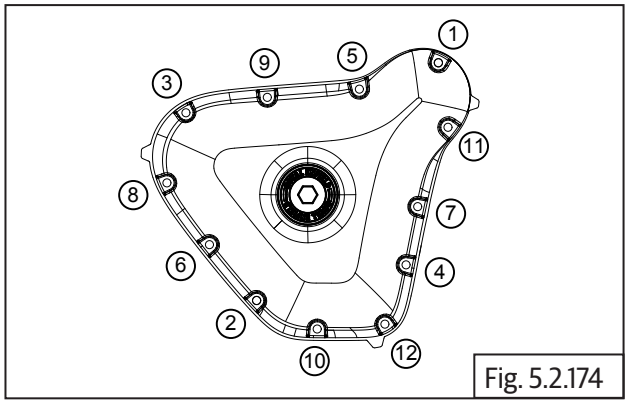

Fig. 5.2.174

- Locate O-ring **(a)** on crankshaft hole plug **(b)**.

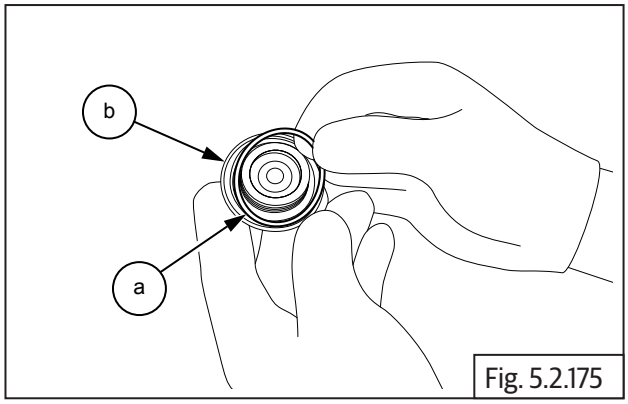

Fig. 5.2.175

- Locate crankshaft hole plug **(M34) (a)** on center of magneto cover and tighten to specified torque.

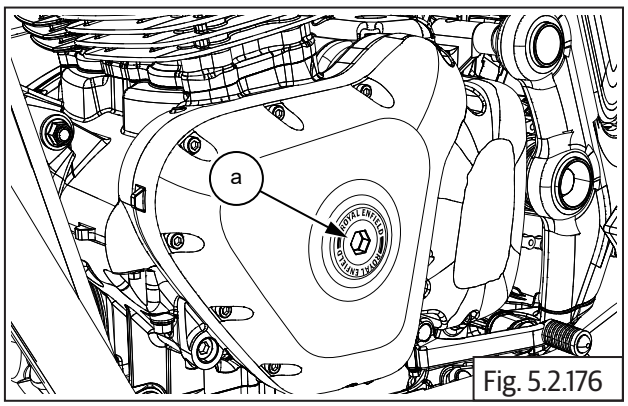

Fig. 5.2.176

	14 mm Allen socket with Ratchet and Torque wrench
Torque	22 N-m/2.2 kgf-m

5.2.53. Magneto / Gear position switch wiring couplers

- Connect the magneto and gear position switch wiring couplers **(a)** to the wiring harness on the rear side of crankcase **(b)**.

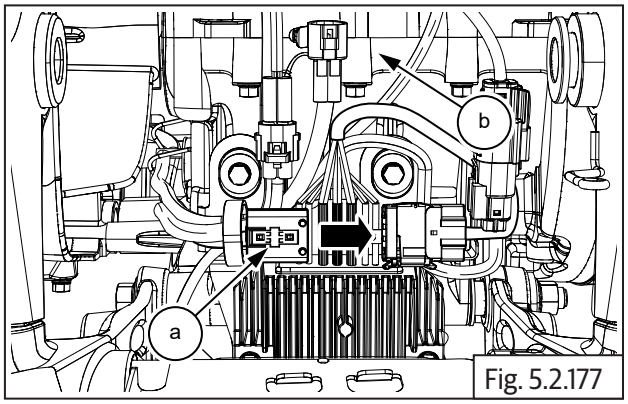

Fig. 5.2.177

5.2.54. FD Sprocket Cover

- Assemble FD sprocket cover **(b)** on crankcase LH.
- Locate 3 Nos. Hex socket head bolts **(M6) (a)** on FD sprocket cover and tighten in a crisscross pattern to specified torque.

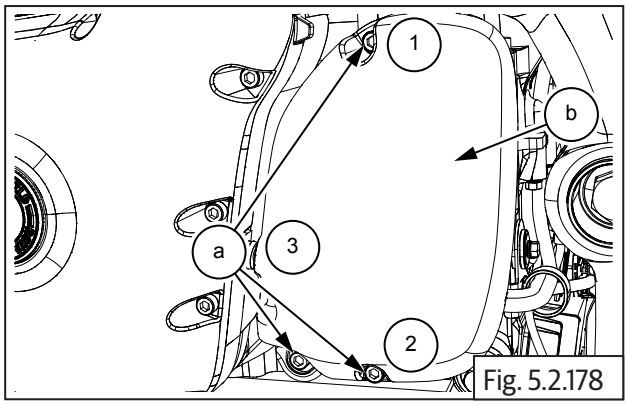

Fig. 5.2.178

	5 mm Allen Socket with Ratchet and Torque wrench
Torque	10 N-m/1 kgf-m

5.2.55. Gear Shift Linkage

- Assemble gear shift lever **(a)** on shaft such that the pedal is parallel to LH foot rest.
- Locate flange Hex bolt **(M6) (b)** on gear shift lever and tighten to specified torque.

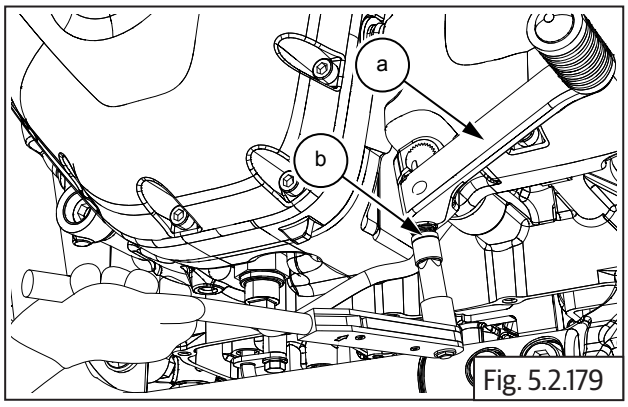

Fig. 5.2.179

	10 mm socket with Torque Wrench
Torque	10 N-m/1 kgf-m

5.2.56. Starter Motor

NOTE
• *Do not tap on the starter motor. It may damage the internal parts.*
• *Inspect the starter drive shaft teeth for any wear-out OR damages.*

- Locate starter motor **(a)** into the housing **(b)** on upper crankcase LH.

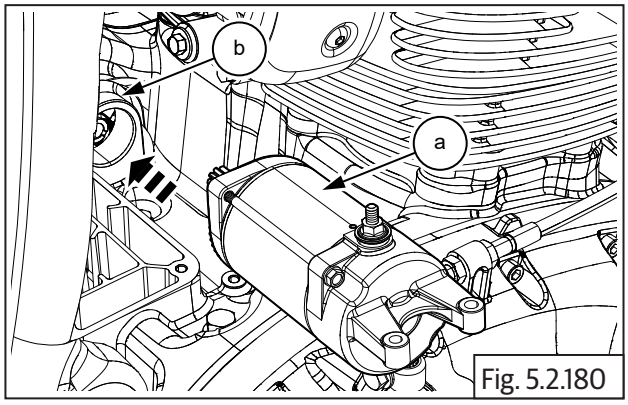

Fig. 5.2.180

- Position negative (-ve) cable **(a)** eyelet over starter motor rear mounting hole and locate 1 No. Hex head flange bolt **(M5) (b) sufficiently.**

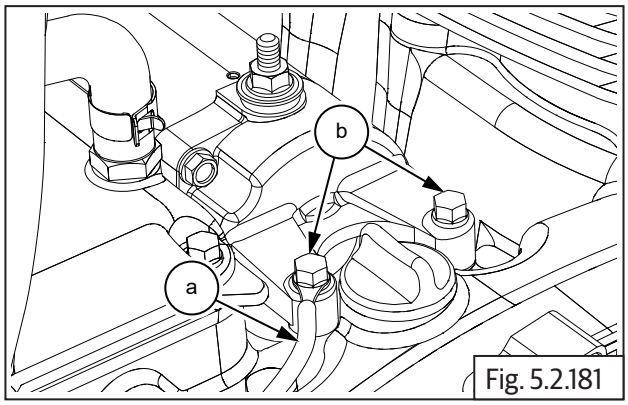

Fig. 5.2.181

- Locate 1 No. Hex head flange bolt **(M5) (a)** on the forward mounting hole on starter motor.
- Tighten both bolts to specified torque.

	8 mm Socket with Ratchet and Torque wrench
Torque	10 N-m/1 kgf-m

5.2.57. Starter Motor Connections

- Connect starter motor positive (+ve) cable **(a)** to starter motor terminal and tighten with Hex nut **(M6) (b)** firmly such that the terminal is not loose. **DO NOT OVERTIGHTEN.**
- Slide protective cap over terminal on starter motor **(c)**.

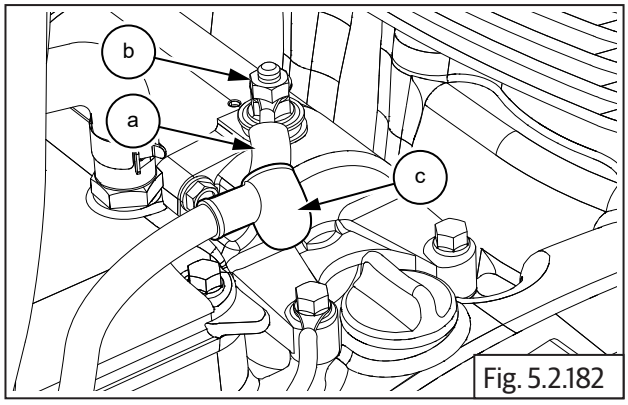

Fig. 5.2.182

	10 mm Double end spanner

5.2.58. Breather Box

- Locate new gasket **(a)** on breather box cover **(b)** and assemble breather box cover on engine.

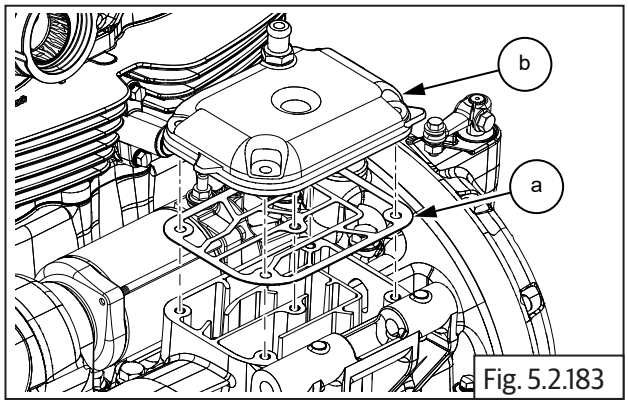

Fig. 5.2.183

- Install and tighten 5 Nos. Hex-head flange bolts **(M6) (a)** to specified torque.

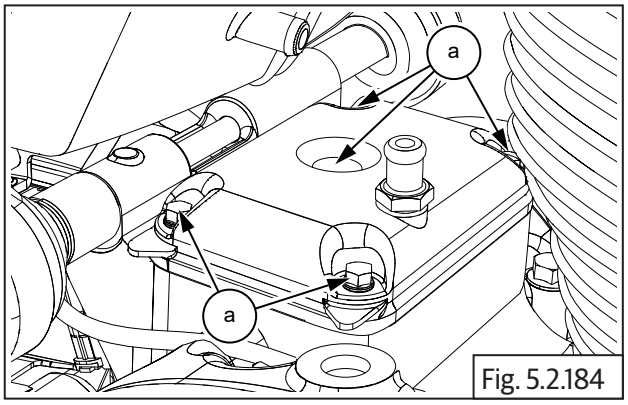

Fig. 5.2.184

	10 mm Socket with Ratchet and Torque wrench
Torque	10 N-m/1 kgf-m

5.2.59. Breather Hose Connections

- Insert the shorter end of hose **(b)** on the tube in breather box **(c)**.
- Position the clip **(a)** on hose correctly.

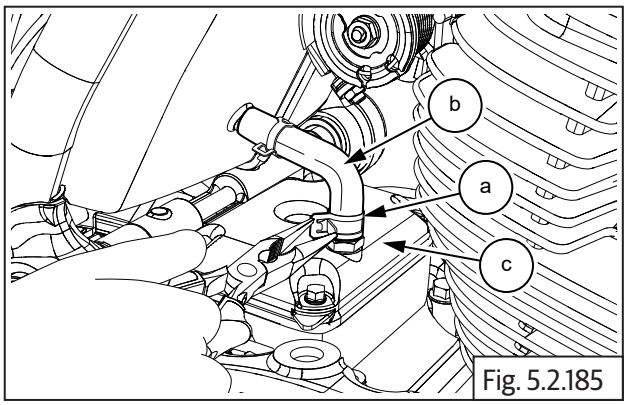

Fig. 5.2.185

	Nose plier

- Locate the other end of hose **(b)** on the tube in air filter box **(c)** and position the clip **(a)** over the breather hose correctly.

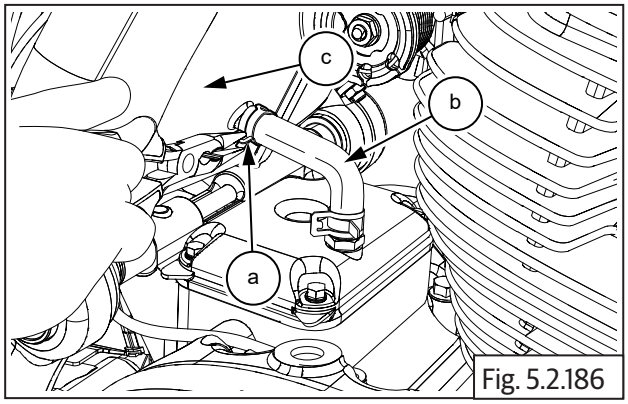

Fig. 5.2.186

	Nose plier

5.2.60. Engine Oil Filling

NOTE
• *Fill engine oil to the recommended level.*

⚠ CAUTION
Do not over fill engine oil has it will lead to oil coming into breather box, possible smoke through exhaust AND/OR oil leaks from joint faces.
Do not under fill engine oil as it will cause excessive heat, increased engine noise, starvation of lubrication AND/OR engine seizure.

- Fill recommended engine oil till the level is between the "Max and Min" marks on the oil level window on clutch cover.

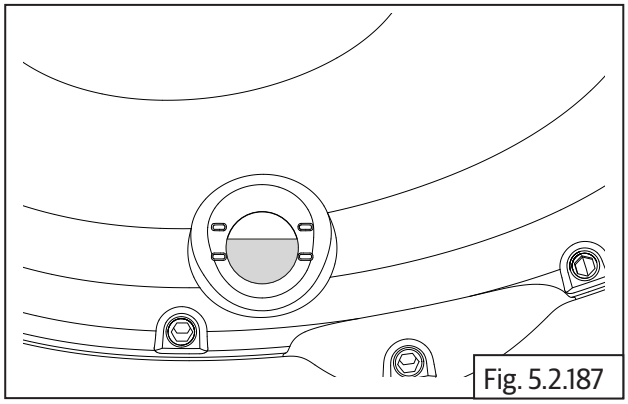
Fig. 5.2.187

Dry Fill	3.9 Liters / 1.03 Imperial gallon
Grade	TOTAL ELF MOTO 4 TECH SAE 10W50 APISL, JASO MA2, SYNTHETIC

- Assemble oil filler cap **(a)** on the filler hole on the crankcase top on RH side and tighten just sufficiently.
- Use an adjustable plier with soft jaws. **DO NOT OVERTIGHTEN.**

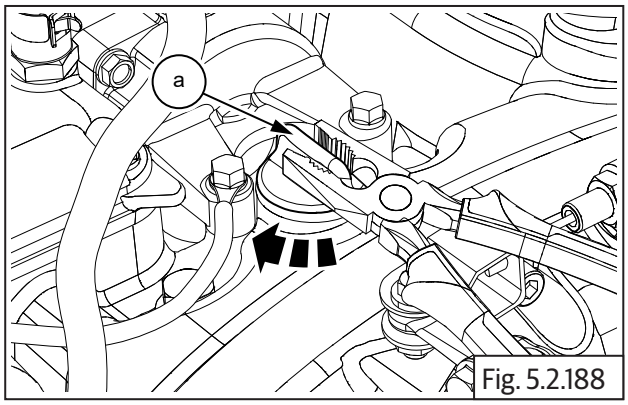

Fig. 5.2.188

	Adjustable plier with Soft jaws

ENGINE REMOVAL FROM FRAME

CONTENTS PAGE

5.3 Engine Removal from Main Frame..... 135

5.3.1. Engine Oil.....135

5.3.2. Oil Cooler Inlet and Outlet Pipes.....135

5.3.3. Oil Cooler Mountings on Frame 136

5.3.4. Oil Filter.....136

5.3.5. Side Panel RH.....136

5.3.6. Seat Assembly 137

5.3.7. Side Panel LH.....137

5.3.8. Battery Connections.....137

5.3.9. Clutch Cable.....138

5.3.10. Fuel Pump Connector and Fuel Level Sensor 139

5.3.11. Fuel Hose (Fuel Pump to Injector).....139

5.3.12. EVAP Connections on Fuel Tank 140

5.3.13. Drain Hose 140

5.3.14. Throttle Body Covers on LH and RH..... 140

5.3.15. Throttle Cable 140

5.3.16. Injector, TPS, MAPS, ISC Connections.....141

5.3.17. Reed Valve Connection 141

5.3.18. Air Filter Housing to Throttle Body.....142

5.3.19. Throttle Body.....142

5.3.20. Engine Steady Bracket 142

5.3.21. Engine Cylinder Head Steady Bracket.....143

5.3.22. Hego/Oxygen Sensor Connectors 143

5.3.23. Exhaust Pipe and Silencer LH 143

5.3.24. Exhaust Pipe and Silencer RH..... 144

CONTENTS **PAGE**

5.3.25. Magneto/Gear Position/Side Stand 145

5.3.26. Starter Motor Connection 146

5.3.27. Spark Plug Suppressor Caps on LH 146

5.3.28. Breather Hose Connection 146

5.3.29. Gear Shift Linkage 147

5.3.30. FD Sprocket Cover 147

5.3.31. Rear Wheel (Increasing chain slack) 147

5.3.32. Remove Rear Chain from FD Sprocket 148

5.3.33. Gear Position Indicator Sensor 148

5.3.34. Cradle Frame Top Mountings 148

5.3.35. Cradle Frame Bottom Mountings 149

5.3.36. Rear Top Engine Mountings 149

5.3.37. Engine from Main Frame 150

5.3.38. Mounting Studs of Engine to Cradle Frame 150

Engine Removal from Main Frame

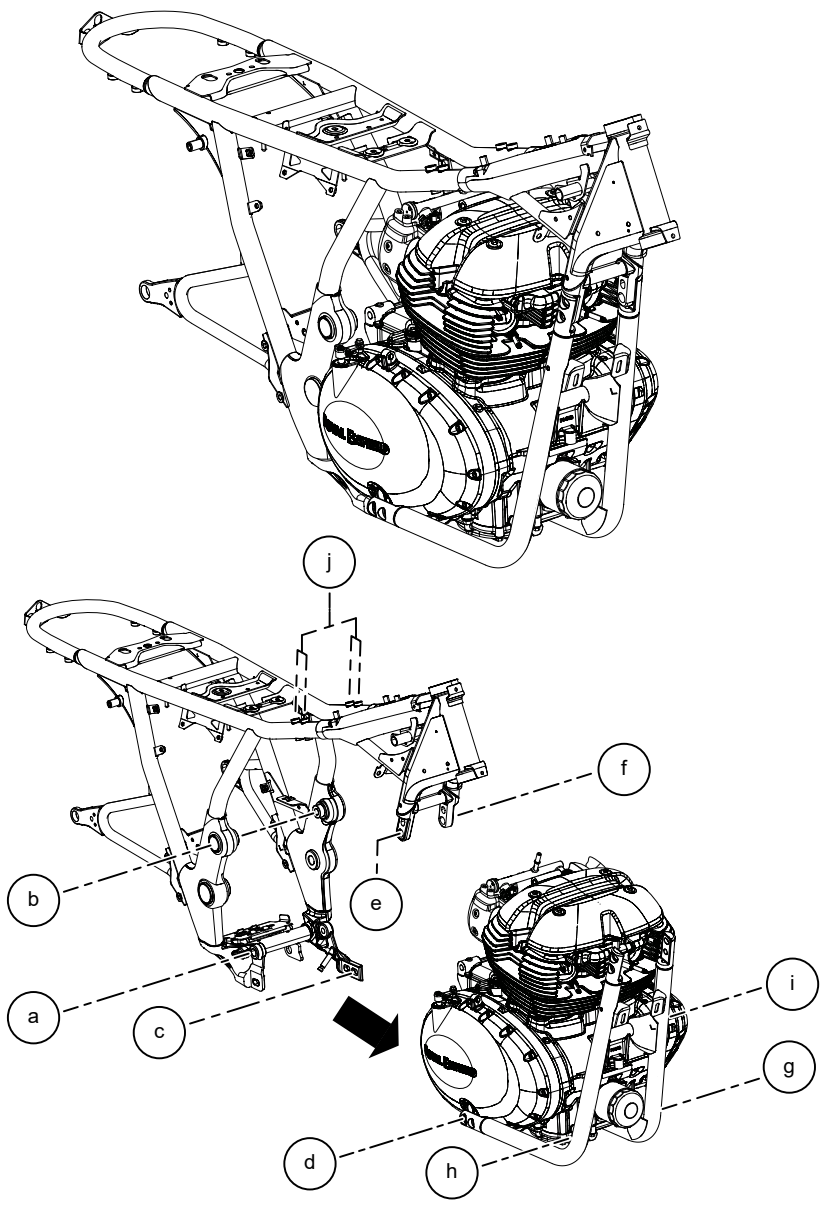

Item No.	Description	Quantity	Item No.	Description	Quantity
a	Rear Lower Crankcase Mount Bolt into Frame	1	f	Front LH Cradle Frame Top into Main Frame	1
b	Rear Upper Crankcase Mount Bolt into Frame	1	g	Front Lower CrankCase Mounting Bolt And Nut LH	1
c	Rear LH Cradle Frame Bottom into Main Frame	1	h	Front Lower CrankCase Mounting Bolt And Nut RH	1
d	Rear RH Cradle Frame Bottom into Main Frame	1	i	Front Upper CrankCase Mounting Bolt And Nut RH	1
e	Rear RH Cradle Frame Top into Main Frame	1	j	Steady Brackets Bolts	4

Cradle Frame Removal from Engine

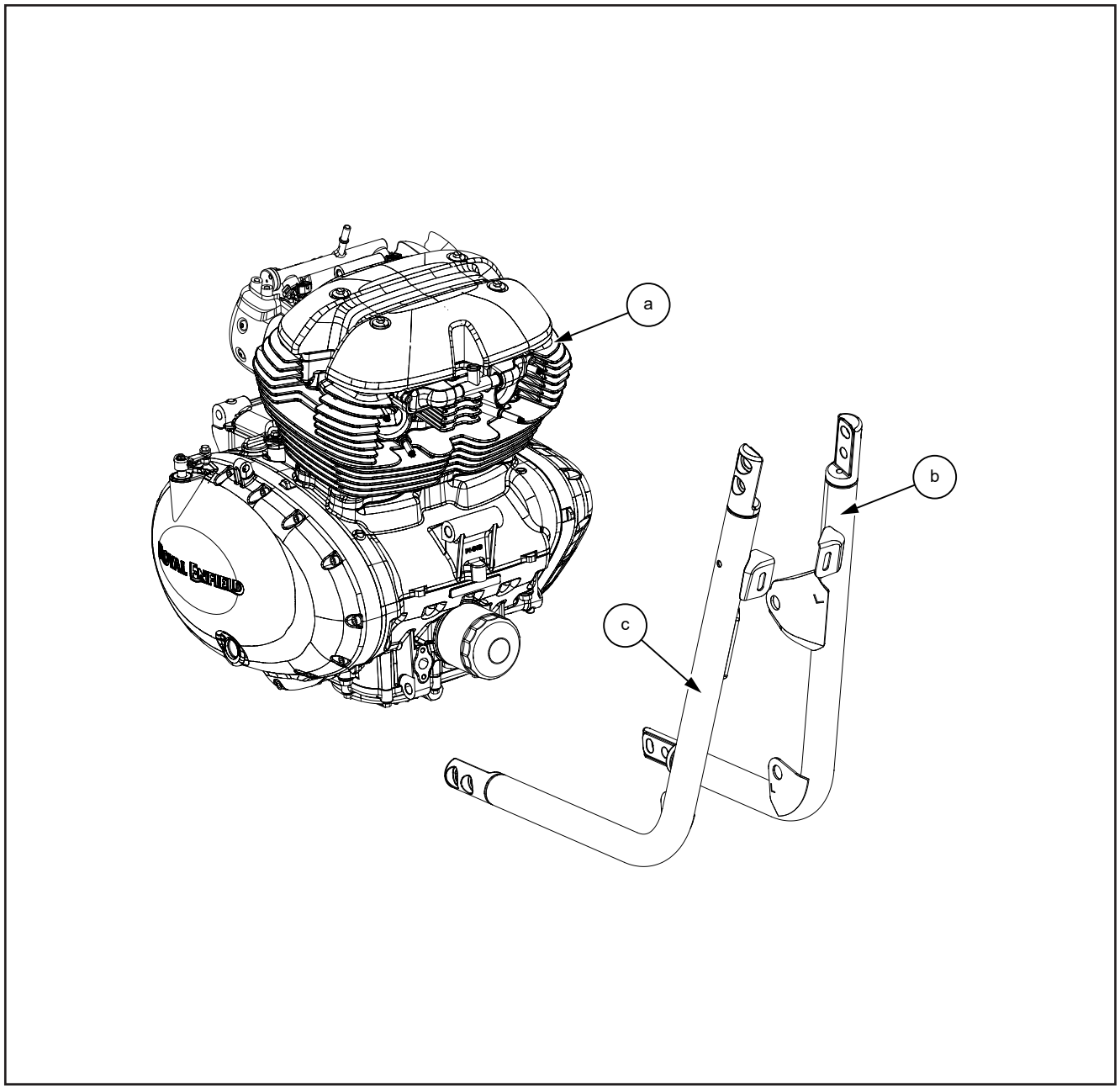

Item No.	Description	Quantity
a	Engine Assembly	1
b	Cradle Frame LH	1
c	Cradle Frame RH	1

Engine Mounting Bolts

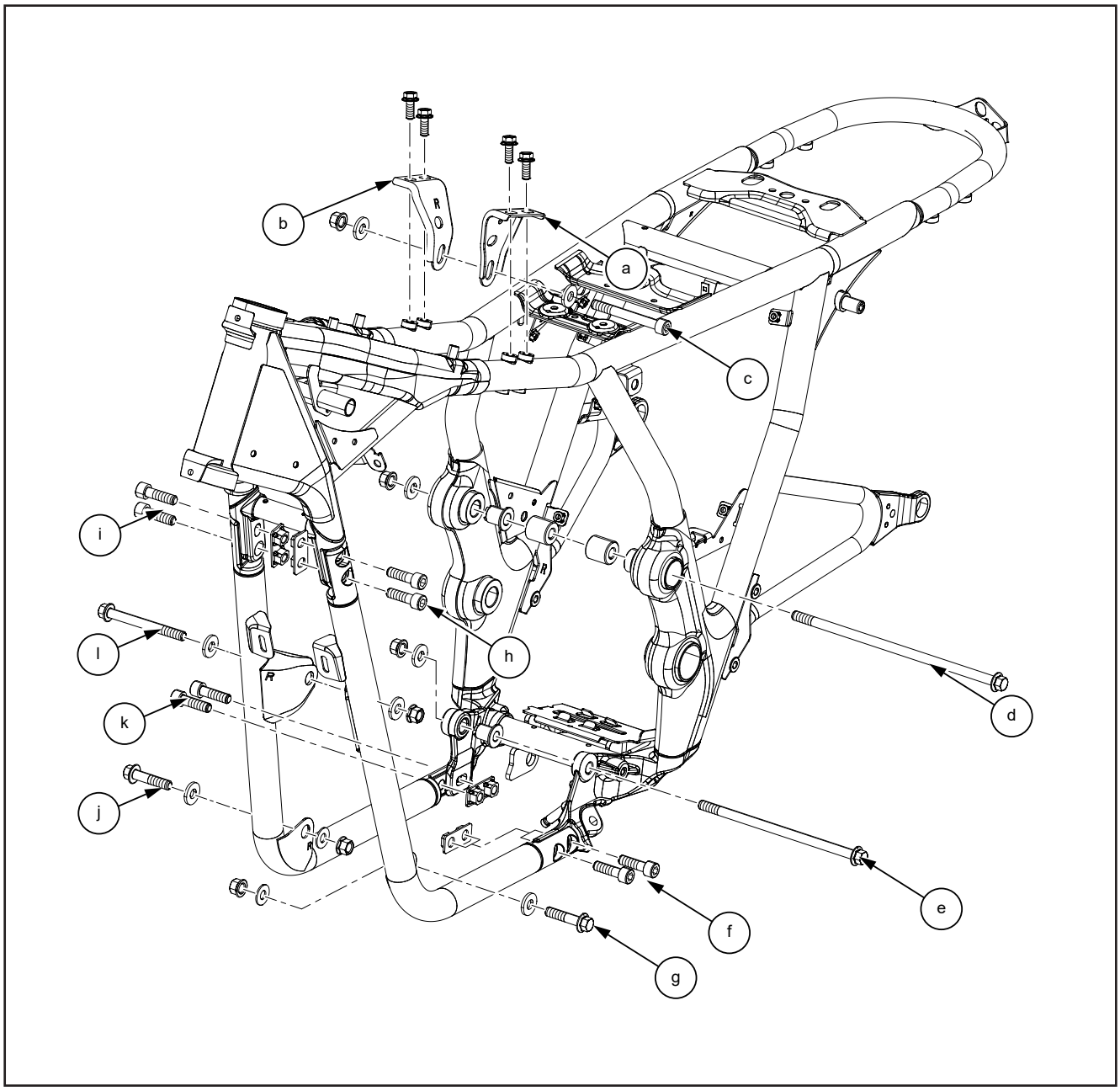

Item No.	Description	Quantity	Item No.	Description	Quantity
a	Engine Steady Bracket to Frame LH	1	g	Front Crankcase Lower LH	1
b	Engine Steady Bracket to Frame RH	1	h	Cradle Frame Top LH	2
c	Engine Steady Bracket to Cylinder Top Mounting	1	i	Cradle Frame Top RH	2
d	Engine Rear Top Mounting	1	j	Front Crankcase Lower RH	1
e	Engine Rear Bottom Mounting	1	k	Cradle Frame Rear RH	2
f	Cradle Frame Rear LH	2	l	Engine Front Mounting	1

Components dismantling sequence to remove engine from frame - flow chart

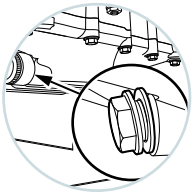

Drain engine oil

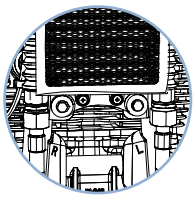

Oil cooler inlet and outlet pipes from engine

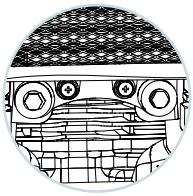

Oil cooler mountings from frame

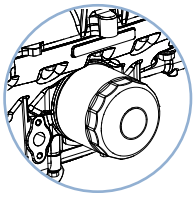

Oil filter

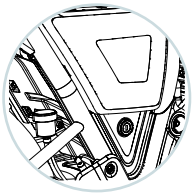

Side panel RH

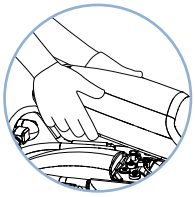

Seat assembly

C

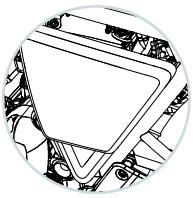

Seat panel LH

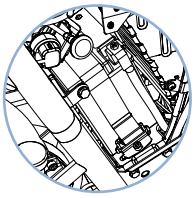

Battery connections

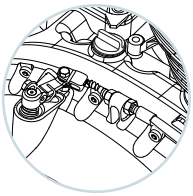

Clutch cable

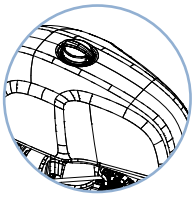

Fuel tank

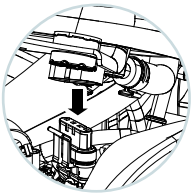

Fuel pump coupler and fuel level sensor coupler

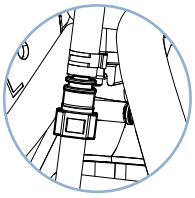

Fuel hose

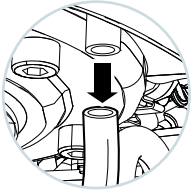

EVAP connection to tank

C

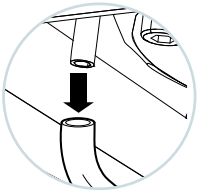

Drain hose

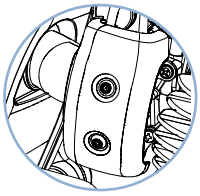

Throttle body covers LH and RH

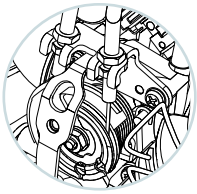

Throttle cable

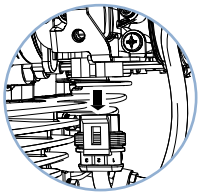

Throttle position sensor and injector coupler RH and LH

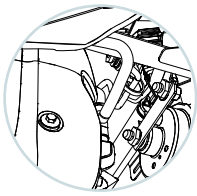

Reed valve connection

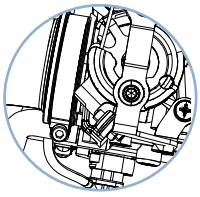

Air filter housing to throttle body connection

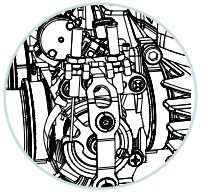

Throttle body

C

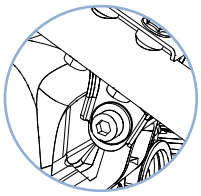

Engine steady bracket



Hego/Oxygen sensor connector

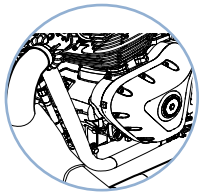

Exhaust pipe and silencer LH and RH

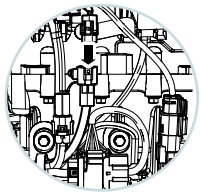

Magneto/Gear position/Side stand switch couplers connections

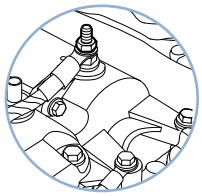

Starter motor connection

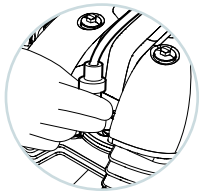

Spark plug suppressor caps on LH

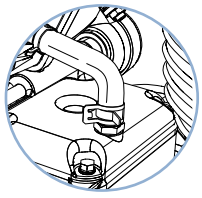

Breather hose connection from breather box to air filter box

C

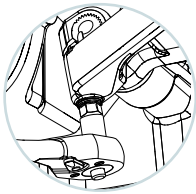

Gear shift linkage

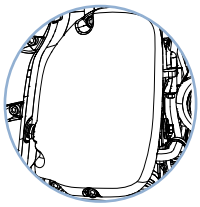

FD sprocket cover

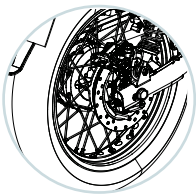

Rear wheel

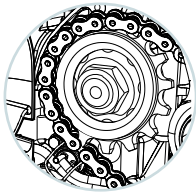

Remove rear wheel chain from FD sprocket



Gear position sensor

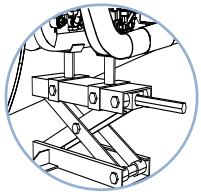

Cradle frame top mountings from main frame

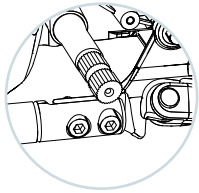

Cradle frame bottom mountings from main frame

C

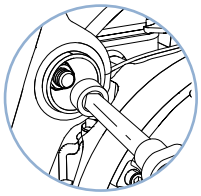

Rear top engine mounting from main frame



Lower bottom support

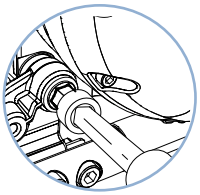

Engine along with cradle frame from main frame

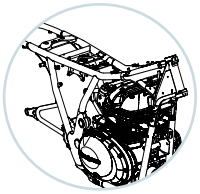

Four mounting studs of engine to cradle frame

5.3 Engine Removal from Main Frame

⚠ WARNING

The engine and exhaust system get extremely hot during normal operation and direct contact with skin can cause serious burns. Make sure engine is in normal temperature (OR) cooled before starting operation.

5.3.1. Engine Oil

NOTE

- *Ensure the motorcycle is placed on a firm flat surface, resting it on the center stand/ramp.*

- Before starting the dismantling process, start the engine and let the engine warm up for a few minutes and then turn it OFF.
- Remove engine oil filler cap **(a)**.

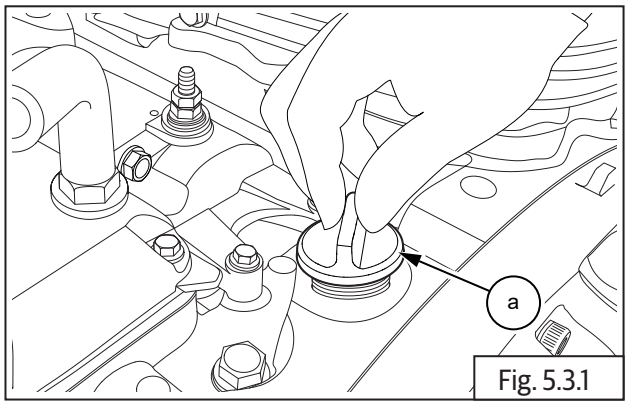

Fig. 5.3.1

- Place a tray **(a)** under engine oil magnetic drain plug **(M14) (b)**. Remove it along with washer **(c)** to drain oil completely from engine.

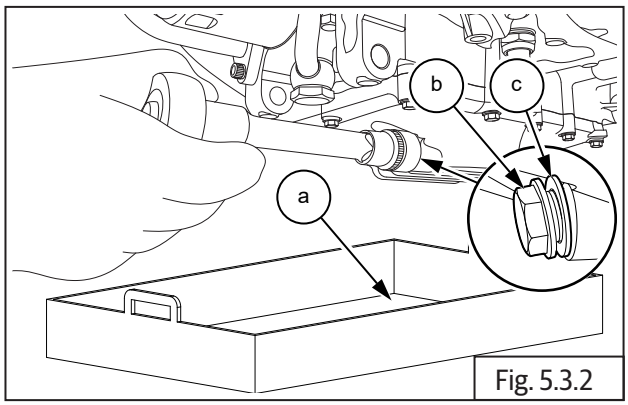

Fig. 5.3.2

	19 mm Socket with Ratchet

5.3.2. Oil Cooler Inlet and Outlet Pipes

Oil cooler inlet and outlet pipes from engine

NOTE

- *Ensure the oil is fully drained and keep a container underneath the engine to avoid oil spilling on floor.*

- Support the top nut **(M16) (a)** suitably and loosen the bottom Hex nut **(M18) (b)** located on oil cooler hose **(c)**.

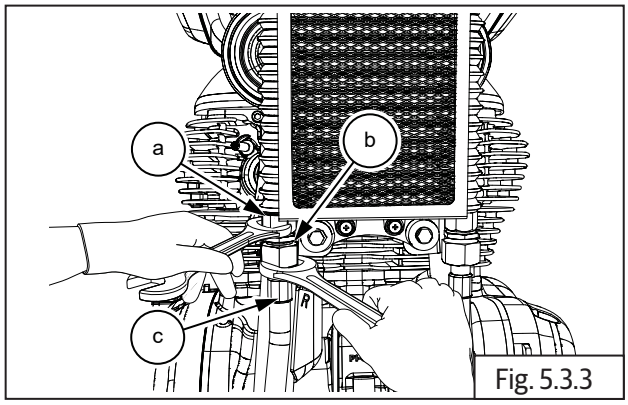

Fig. 5.3.3

	24 mm and 27 mm Double end spanner

- Loosen and remove 2 Nos. Hex socket screws **(M6) (a)** to disconnect oil cooler inlet pipe **(b)** from engine.

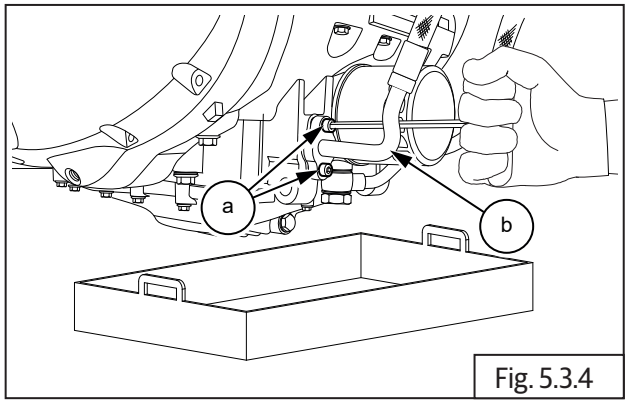

Fig. 5.3.4

	5 mm Allen Socket with Ratchet

- Loosen and remove bolt union crankcase **(M16) (a)** along with washer located below front bottom of engine.

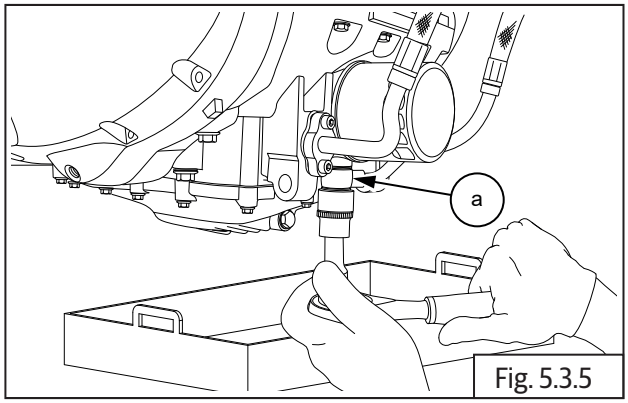

Fig. 5.3.5

	24 mm Socket with Ratchet

- Disconnect 2 Nos. inlet pipe lines one by one.

NOTE
• *Cover the pipe ends and cooler ends with suitably to avoid dust entry.*

5.3.3. Oil Cooler Mountings on Frame

- Loosen and remove 2 Nos. Hex flange head bolts **(M6) (a)** along with washers and nuts from oil cooler mounting frame **(b)**.
- Gently push cooler top mounting bush **(c)** downwards to remove cooler from frame.

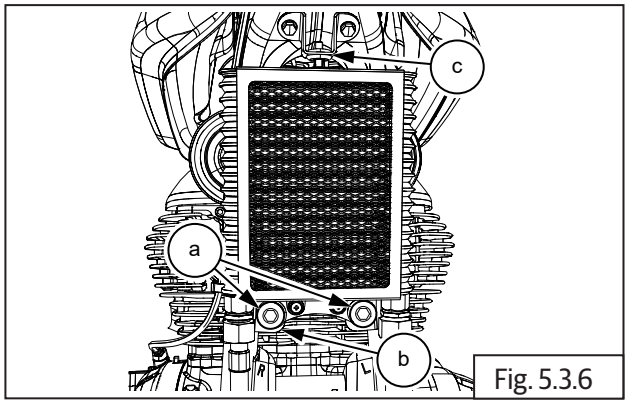

Fig. 5.3.6

	10 mm Socket with Ratchet

NOTE
• *Ensure to cover the cooler pipe ends suitably to avoid exposure to dust.*

⚠ CAUTION
Do not damage cooler fins. Carefully handle the cooler and place it in a safe location.

5.3.4. Oil Filter

- Place a tray under engine oil filter **(a)**.
- Loosen and remove using special tool **(b)** from the front bottom of engine **(c)**.

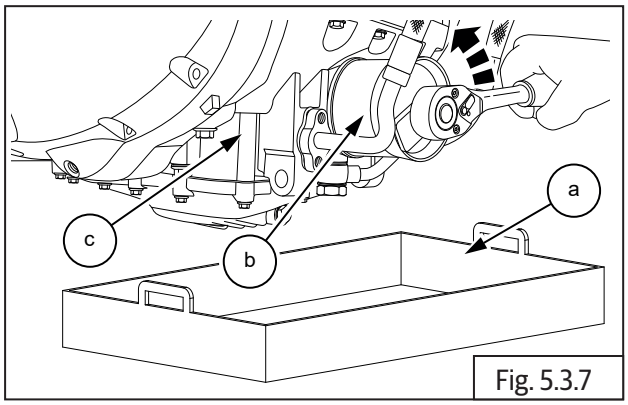

Fig. 5.3.7

SPL 	Part No: ST30294/a
	Part Name: Oil Filter wrench with Ratchet

5.3.5. Side Panel RH

- Insert motorcycle/ignition key **(a)** and turn clockwise to unlock and remove RH side panel **(b)** from motorcycle.

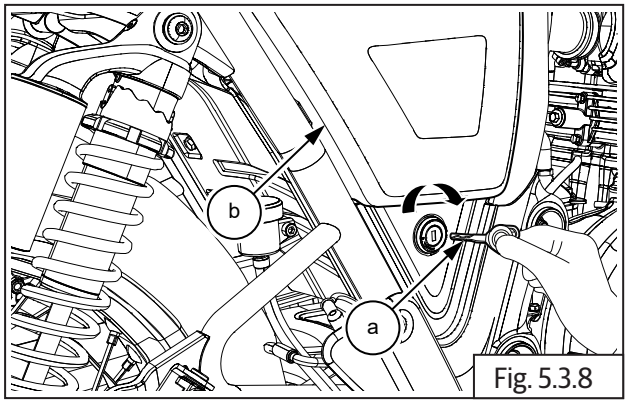

Fig. 5.3.8

5.3.6. Seat Assembly

- Locate seat lock **(a)** on RH side of motorcycle near to the RH panel.
- Pull/Release seat lock **(a)** to remove seat from motorcycle.

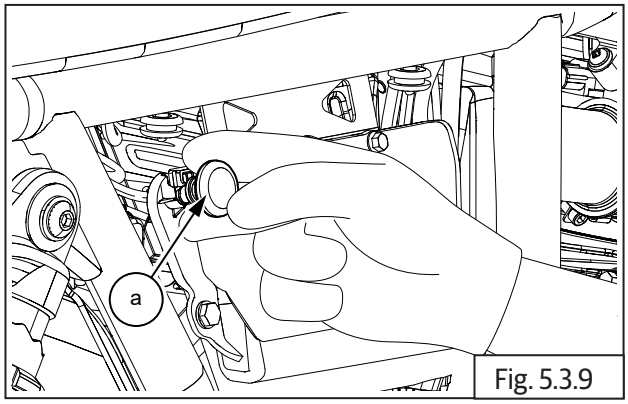

Fig. 5.3.9

- Gently lift and pull seat **(a)** from rear side of motorcycle and place it in a safe location to prevent from scratches and dirt.

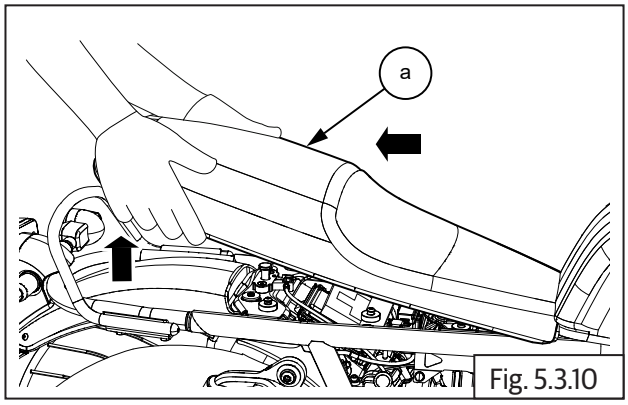

Fig. 5.3.10

5.3.7. Side Panel LH

- Loosen and remove Phillips head screw **(a)** located near to Engine control unit (ECU) **(b)**.

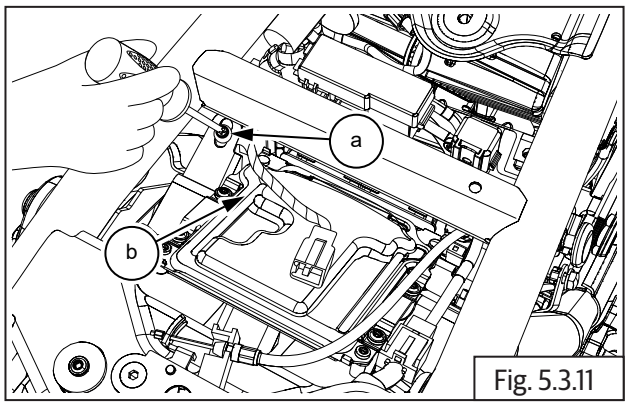

Fig. 5.3.11

	Phillips screw driver

- Gently slide and remove LH panel **(a)** from motorcycle.

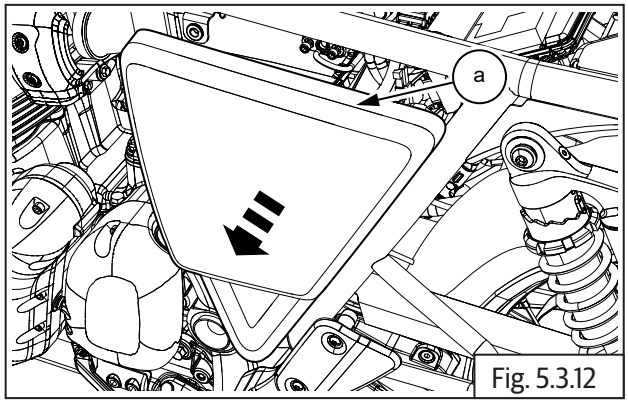

Fig. 5.3.12

5.3.8. Battery Connections

NOTE
• *Ensure ignition and stop switches are in OFF position before disconnecting battery cables.*

- Loosen and remove Hex head bolt **(M6) (a)** to disconnect negative (-) terminal from battery **(b)**.

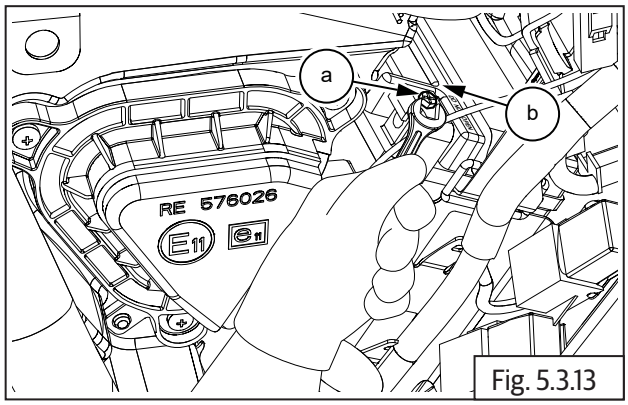

Fig. 5.3.13

	10 mm Double end spanner

- Loosen and remove Hex head bolt **(M6) (a)** to disconnect positive (+) terminal from battery **(b)**.

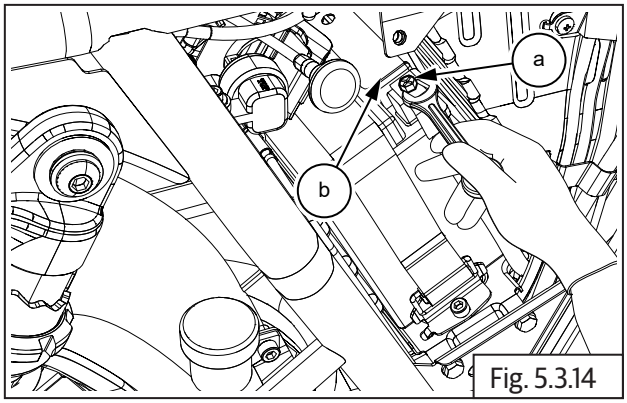

Fig. 5.3.14

	10 mm Double end spanner

5.3.9. Clutch Cable

- Disconnect the clutch cable from handlebar lever. Refer clutch lever dismantling (section 6.2.1).
- Locate clutch cable actuating assembly **(a)** on the clutch cover **(b)**.

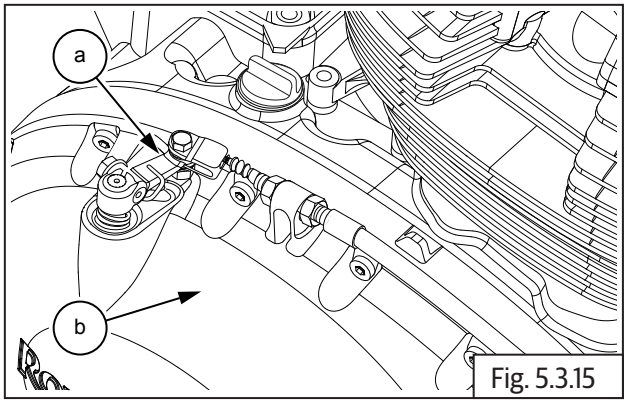

Fig. 5.3.15

- Loosen outer lock nut **(M8) (a)** from rear of cable adjuster **(b)**.

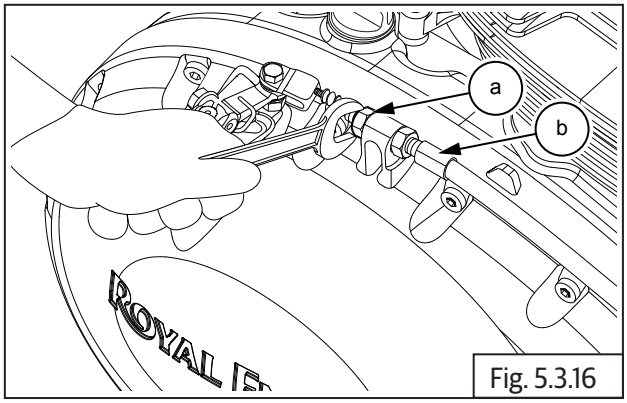

Fig. 5.3.16

- Loosen inner locknut **(M8) (a)** fully and pull adjuster from housing cable guide **(b)**.

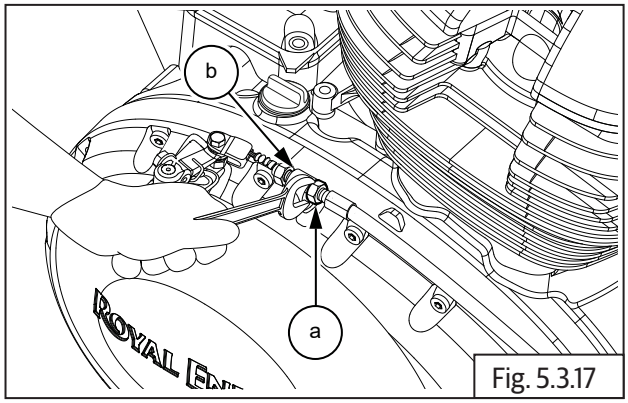

Fig. 5.3.17

	12 mm Double end spanner

- Release inner cable **(a)** from clevis on clutch actuating assembly **(b)**.

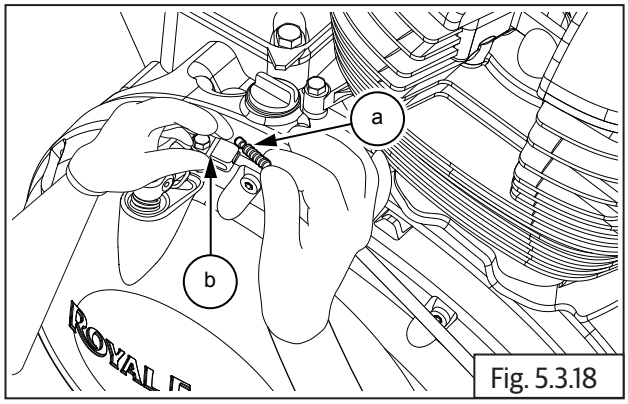

Fig. 5.3.18

- Remove rubber grommet **(a)**.

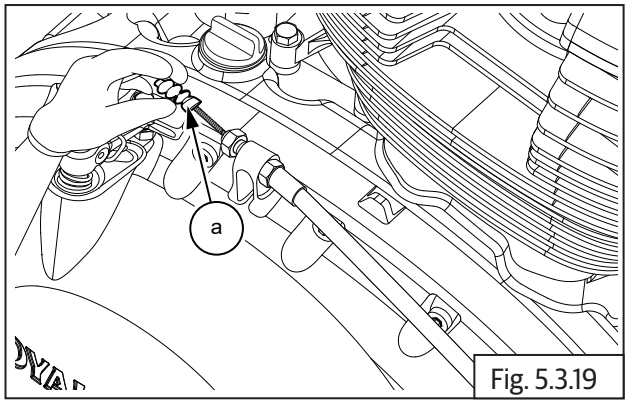

Fig. 5.3.19

- Remove outer lock nut **(a)**.

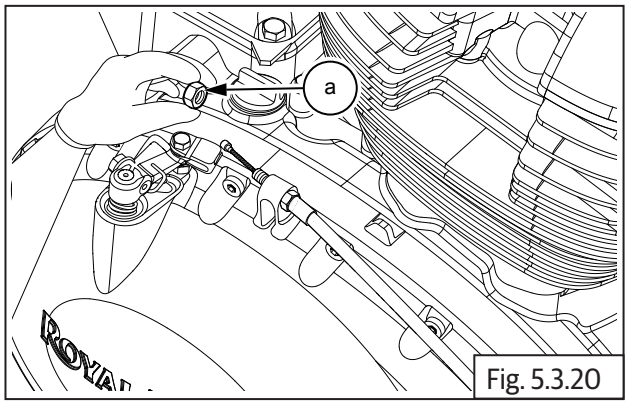

Fig. 5.3.20

- Remove clutch cable **(a)** from cable guide **(b)**.

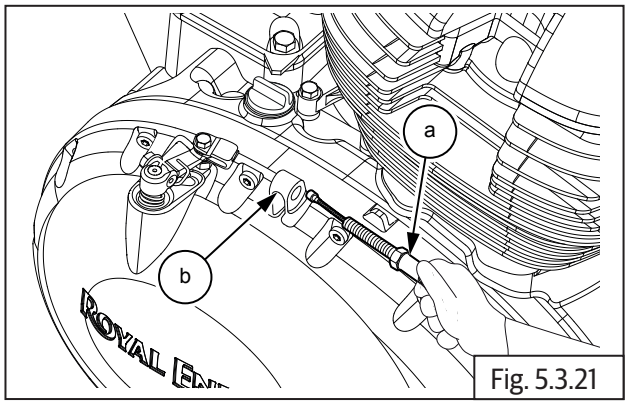

Fig. 5.3.21

- Loosen and remove 2 Nos. Hex head bolts **(M6) (a)** on rear end of fuel tank **(b)**.

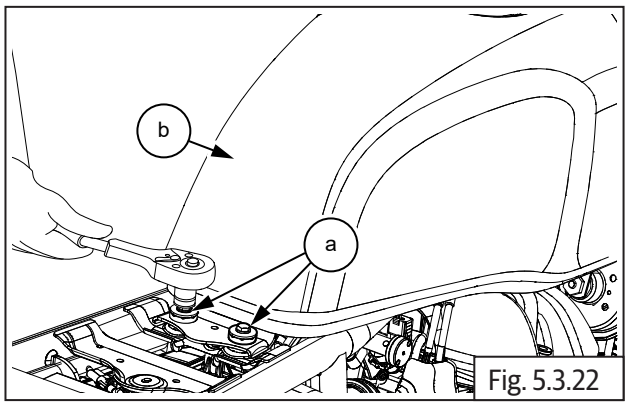

Fig. 5.3.22

	10 mm Socket with Ratchet

5.3.10. Fuel Pump Connector and Fuel Level Sensor

- Gently lift the fuel tank upwards to access the fuel pump connector.
- Disconnect the fuel pump connector **(a)** from fuel tank **(b)**.

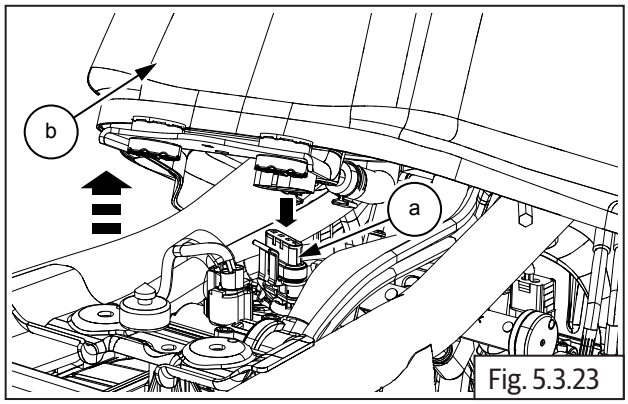

Fig. 5.3.23

- Disconnect fuel level sensor connector **(a)** from fuel tank **(b)**.

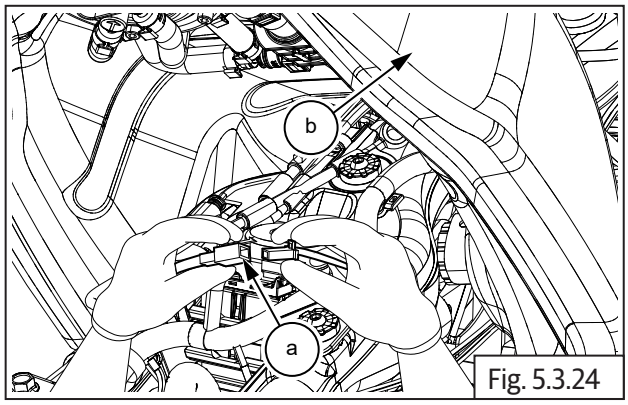

Fig. 5.3.24

5.3.11. Fuel Hose (Fuel Pump to Injector)

- Locate the fuel feed hose connector (fuel pump to injector rail) **(a)** under the fuel tank.

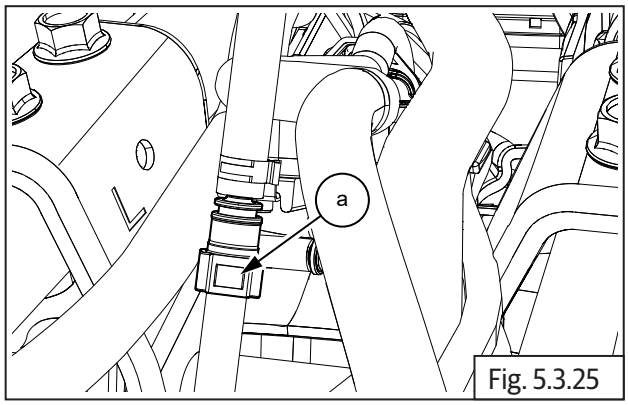

Fig. 5.3.25

- Disconnect quick joint connector **(a)** from pipe **(b)** by pressing the lock button **(c)**.

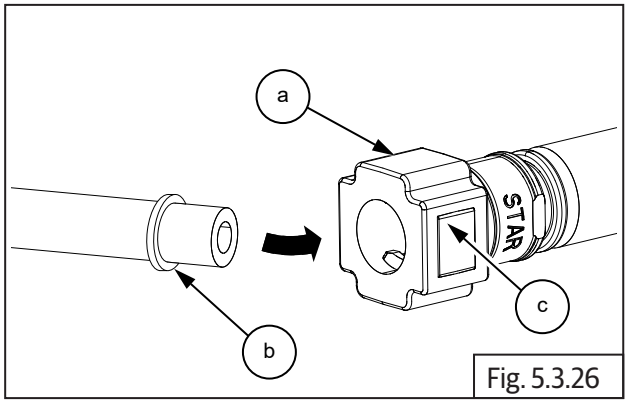

Fig. 5.3.26

⚠ WARNING

Fuel pressure may still in line; crank engine to release pressure in the fuel line.

5.3.12. EVAP Connections on Fuel Tank

- Disconnect EVAP connection hose **(a)** from fuel tank **(b)**.

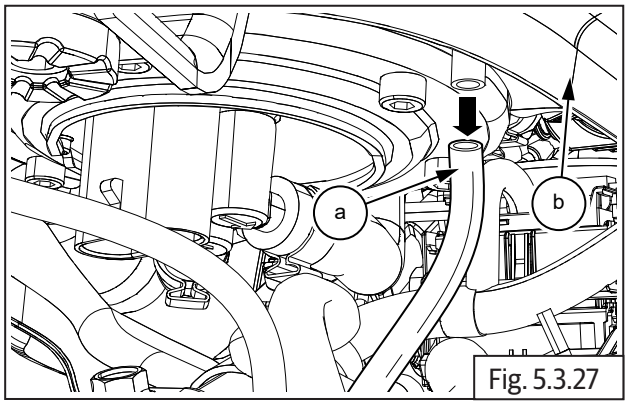

Fig. 5.3.27

5.3.13. Drain Hose

- Disconnect drain hose connection **(a)** from fuel tank **(b)**.

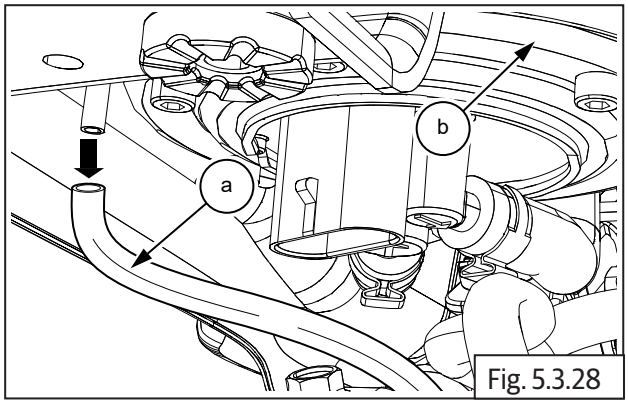

Fig. 5.3.28

5.3.14. Throttle Body Covers on LH and RH

- Loosen and remove 2 Nos. Hex socket bolts **(M5) (a)** from RH and LH throttle body cover **(b)**.

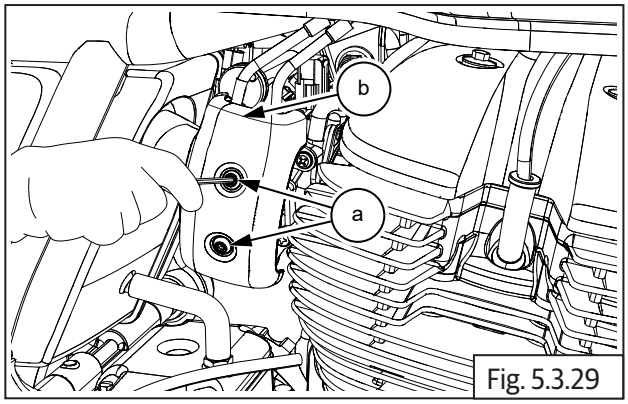

Fig. 5.3.29

	4 mm Allen key

5.3.15. Throttle Cable

(Connection on Throttle Body)

- Loosen 2 Nos. Hex head nuts **(M6) (a)** on RH throttle body **(b)** to release the tension in throttle cable.

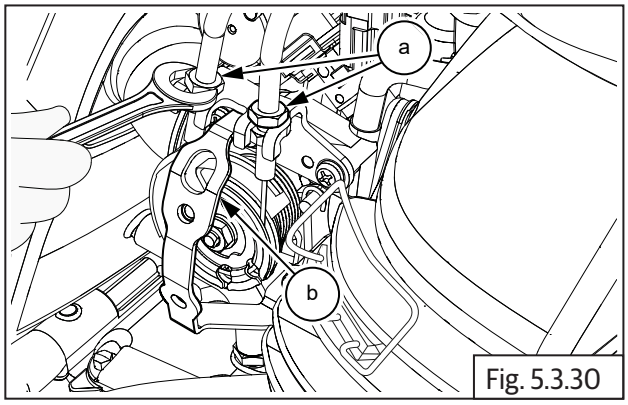

Fig. 5.3.30

	10 mm Double end spanner

- Gently pull throttle cable **(a)** out from bracket to release the adjuster and lock nuts **(b)** from throttle body.
- Repeat the procedure to release the other throttle cable.

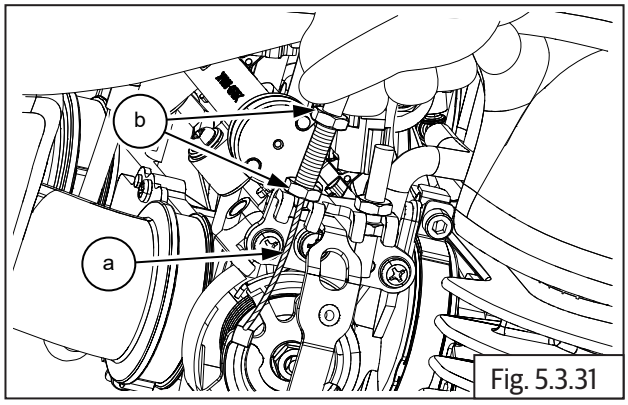

Fig. 5.3.31

5.3.16. Injector, TPS, MAPS, ISC Connections

Throttle Position Sensor (TPS), Manifold Absolute Pressure (MAP) Sensor and Idle Speed Controller (ISC)

- Disconnect throttle position sensor connector **(a)** from LH throttle body **(b)**.

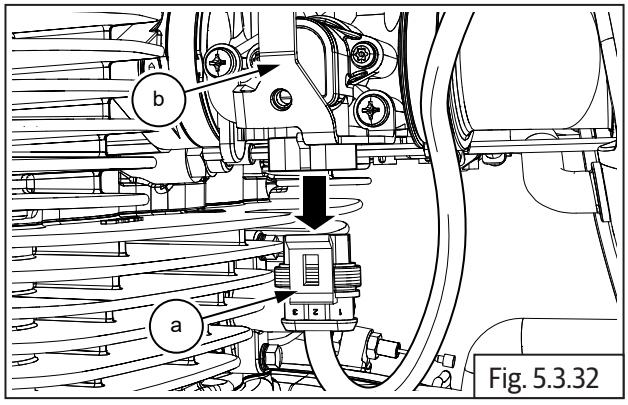

Fig. 5.3.32

- Gently press connector lock to disconnect fuel injector connectors **(a)** from LH and RH of throttle body **(b)**.

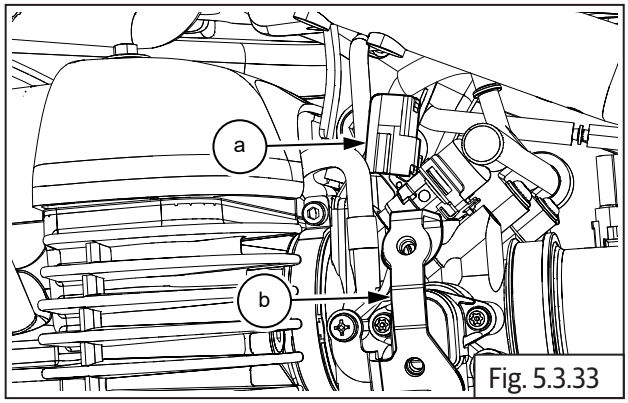

Fig. 5.3.33

- Disconnect idle speed control sensor connector **(a)** from throttle body **(b)**.

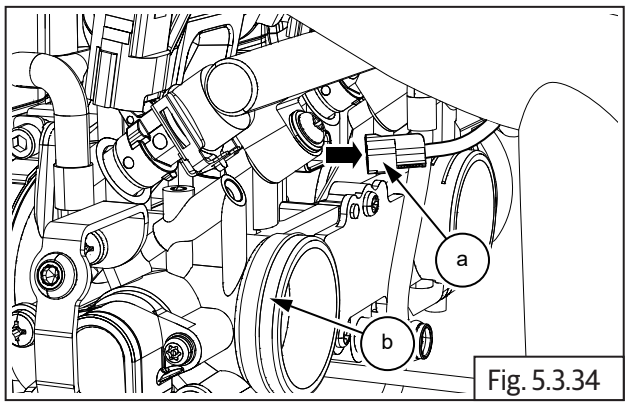

Fig. 5.3.34

5.3.17. Reed Valve Connection

- Disconnect Reed valve hose **(a)** from front side of engine cylinder head.

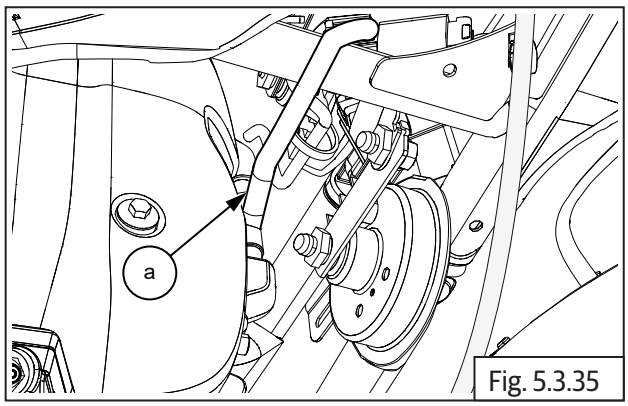

Fig. 5.3.35

5.3.18. Air Filter Housing to Throttle Body

- Locate LH and RH worm clips on throttle body to air filter box.
- Loosen both LH and RH worm clip screws **(M5) (a)** and separate the air filter housing **(b)** from throttle body **(c)**.

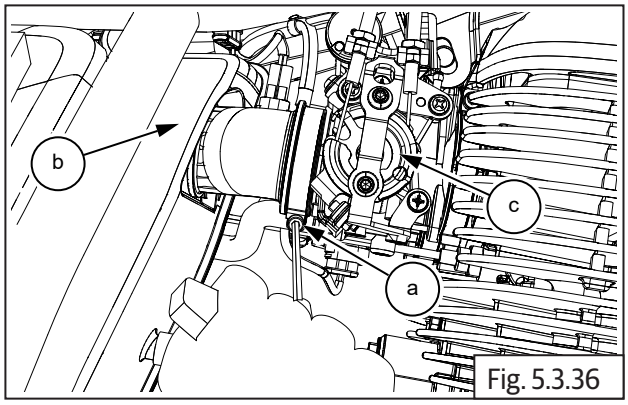

Fig. 5.3.36

	4 mm Allen key

5.3.19. Throttle Body

- Ensure throttle position sensor, manifold absolute pressure sensor and idle speed controller wiring connectors are disconnected.
- Disconnect the hoses **(a)** from canister purge valve.
- Loosen LH and RH worm clip screws **(M5) (b)** to disconnect throttle body from inlet manifolds.

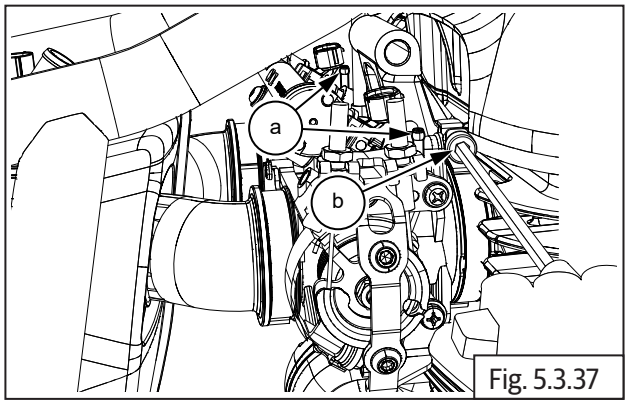

Fig. 5.3.37

	4 mm Allen key

5.3.20. Engine Steady Bracket

- Support the bottom of engine suitably.
- Locate steady bracket **(a)** on center of main frame **(b)**.
- Loosen and remove Hex socket head bolt **(M8) (c)** on LH side and hold hex nut on RH.

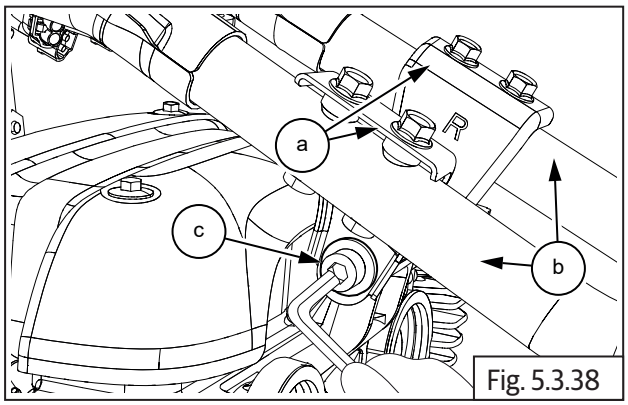

Fig. 5.3.38

	6 mm Allen key

- Remove Hex nut **(M8) (a)** and washer from RH side.

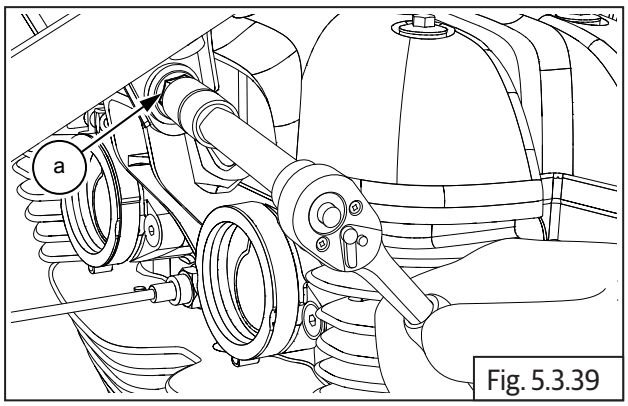

Fig. 5.3.39

	12 mm Socket with Ratchet

5.3.21. Engine Cylinder Head Steady Bracket

- Remove 4 Nos. Hex flange head bolts **(M8) (a)** from LH and RH steady brackets **(b)** located on center of main frame **(c)**.

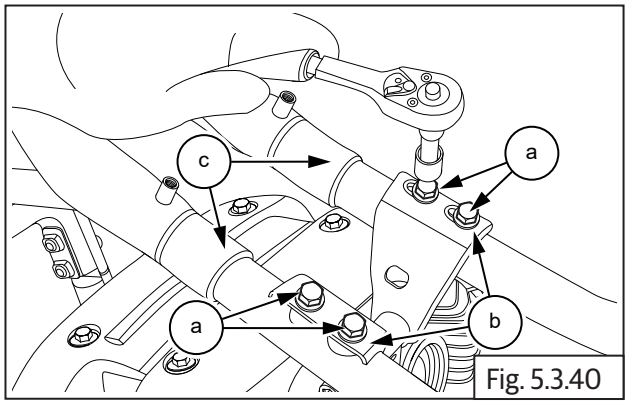

Fig. 5.3.40

	12 mm Socket with Ratchet

- Remove the LH and RH steady brackets **(a)** from frame **(b)**.

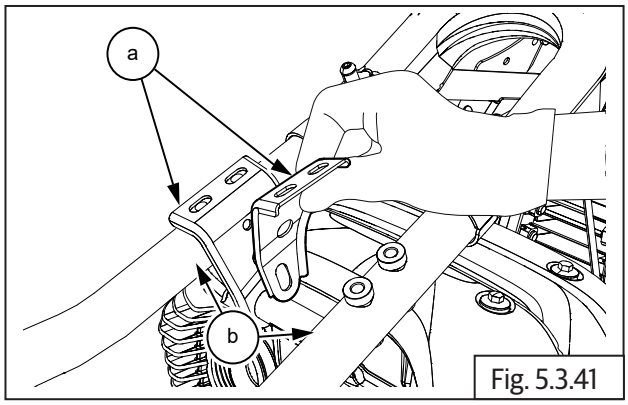

Fig. 5.3.41

5.3.22. Hego/Oxygen Sensor Connectors

- Disconnect Hego/oxygen sensor connectors **(a)** from both LH and RH located on front side of engine.

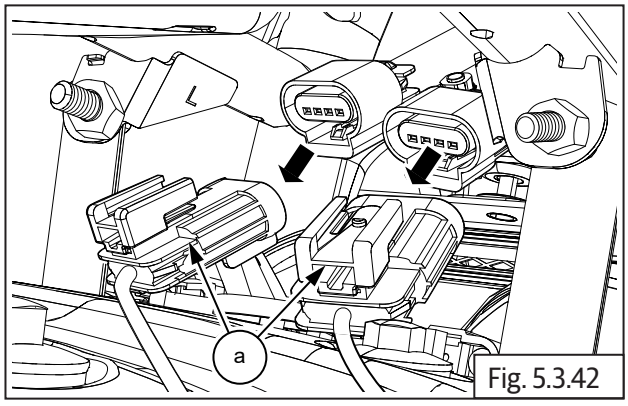

Fig. 5.3.42

5.3.23. Exhaust Pipe and Silencer LH

- Locate LH silencer bracket attached on rear end of the frame/near to shock absorber.
- Loosen and remove Hex head flange bolt **(M8) (a)** from frame bracket **(b)**. Locate and support the outer end Hex nut **(M8) (c)** suitably.

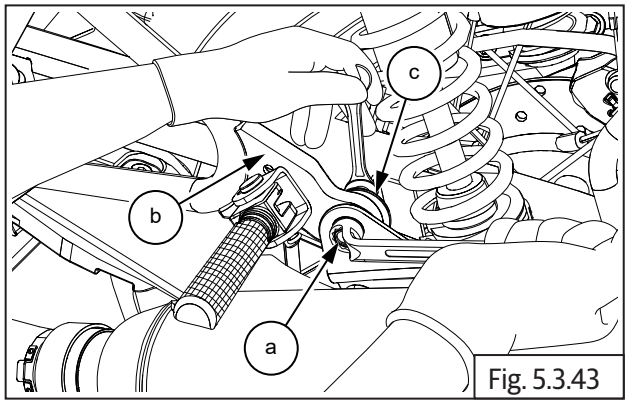

Fig. 5.3.43

	12 mm Ring spanner and Double end spanner

- Loosen and remove Hex flange head bolt **(M8) (a)** on clamp **(b)** (exhaust pipe to silencer). Locate and support the outer end Hex nut **(M8) (c)** suitably.

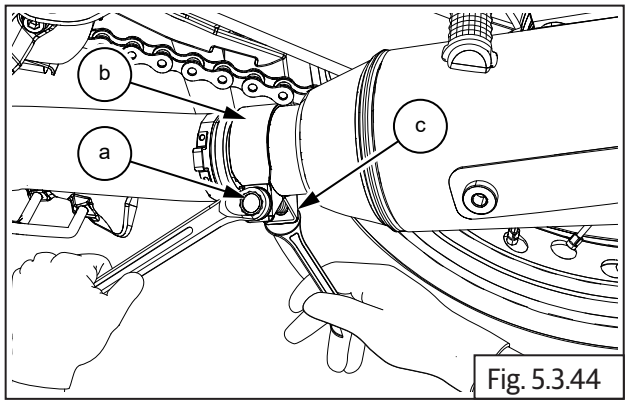

Fig. 5.3.44

	12 mm Ring spanner and Double end spanner

- Loosen and remove Hex head flange bolt **(M8) (a)** on frame **(b)** located below the front bottom of LH cover.

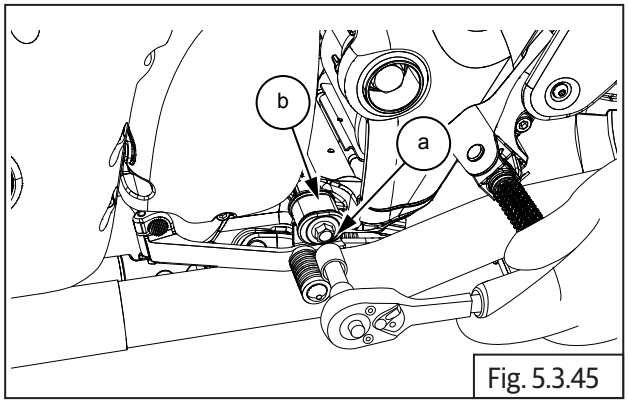

Fig. 5.3.45

	12 mm Socket with Ratchet

- Loosen and remove 2 Nos. Hex nuts **(M8) (a)** on engine LH side to disconnect LH exhaust pipe **(b)** from cylinder head **(c)**.

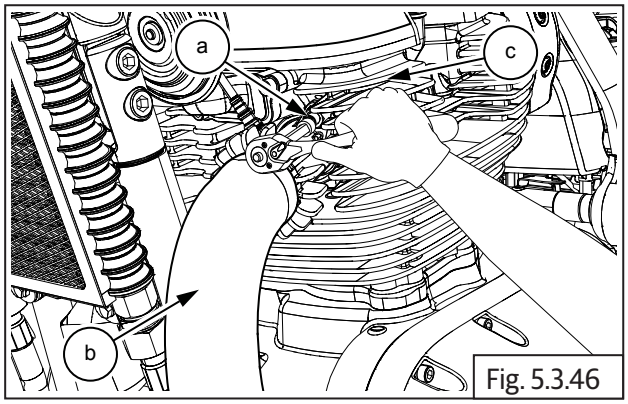

Fig. 5.3.46

	12 mm Socket with Ratchet

- Gently remove the LH exhaust pipe **(a)** along with Hego/oxygen sensor **(b)** from cylinder head.

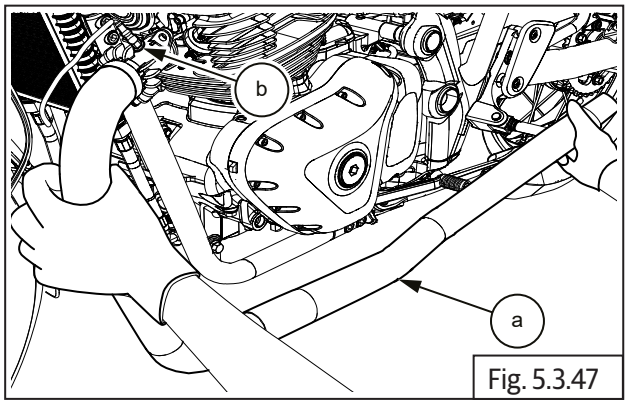

Fig. 5.3.47

5.3.24. Exhaust Pipe and Silencer RH

- Loosen and remove Hex flange head bolt **(M8) (a)** from frame bracket **(b)**. Locate and support the outer end Hex nut **(M8) (c)** suitably.

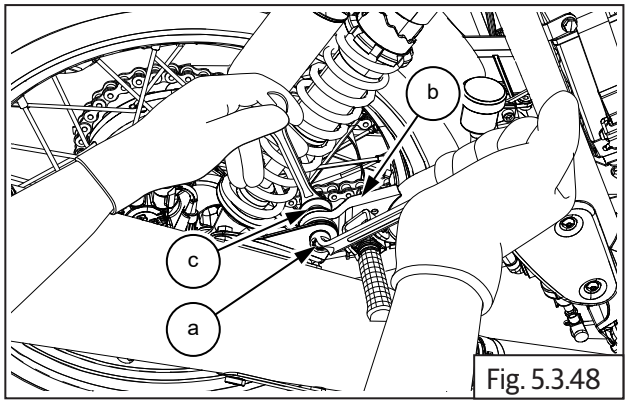

Fig. 5.3.48

	12 mm Ring and Double end spanner

- Loosen and remove Hex head flange bolt **(M8) (a)** from clamp **(b)** (exhaust pipe to silencer). Locate and support the outer end Hex nut **(M8)** suitably.

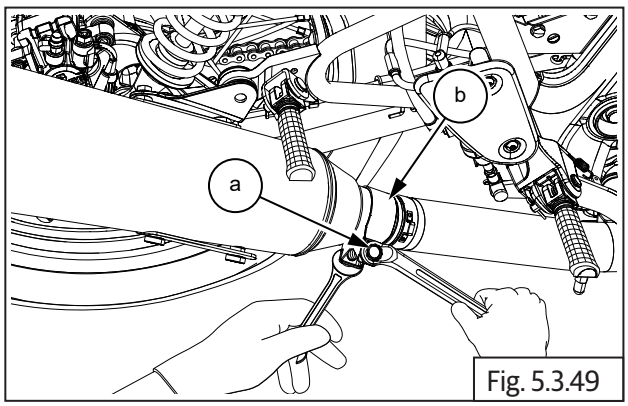

Fig. 5.3.49

	12 mm Ring and Double end spanner

- Loosen and remove Hex head flange bolt **(M8) (a)** from main frame **(b)** located on bottom of clutch cover/below to rear brake lever **(c)**.

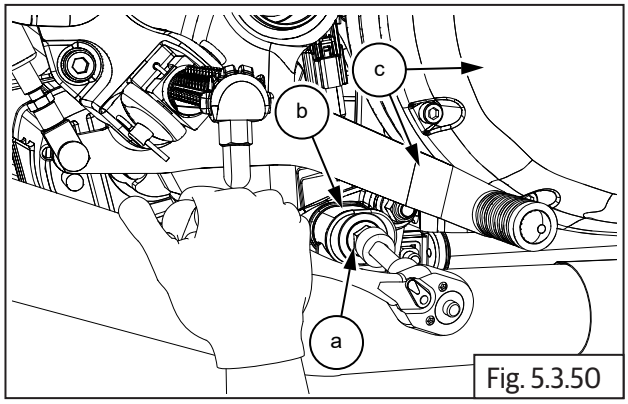

Fig. 5.3.50

	12 mm Socket with Ratchet

- Loosen and remove 2 Nos. Hex nuts **(M8) (a)** from cylinder head **(b)**.

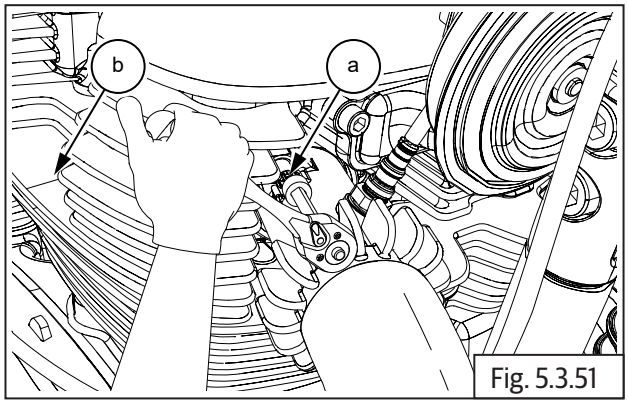

Fig. 5.3.51

	12 mm Socket with Ratchet

- Gently remove the RH exhaust pipe **(a)** along with Hego/oxygen sensor **(b)**.

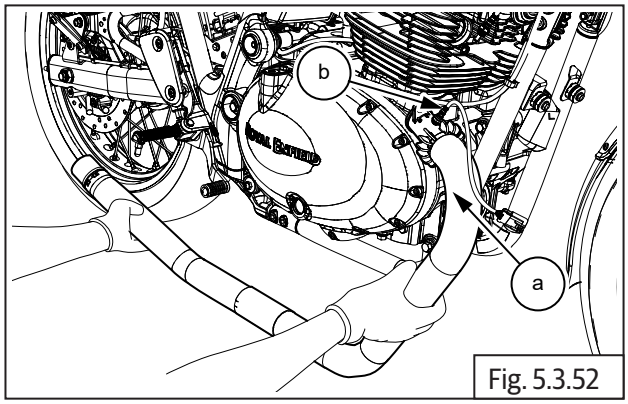

Fig. 5.3.52

5.3.25. Magneto/Gear Position/Side Stand

Magneto/Gear Position/Side Stand Switch Couplers Connections

- Disconnect the gear position sensor **(a)** located on rear side of engine **(b)**.

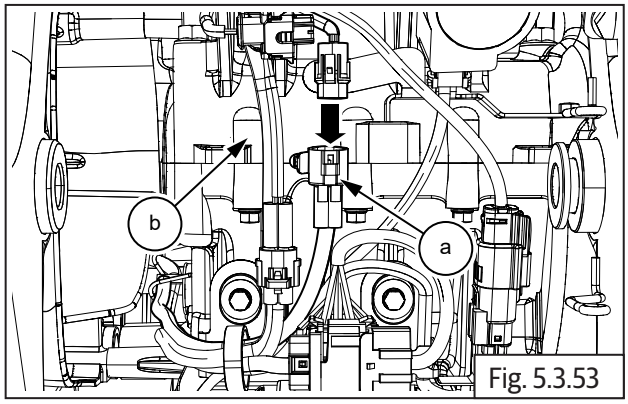

Fig. 5.3.53

- Disconnect magneto sensor connector **(a)** located on rear side of engine **(b)**.

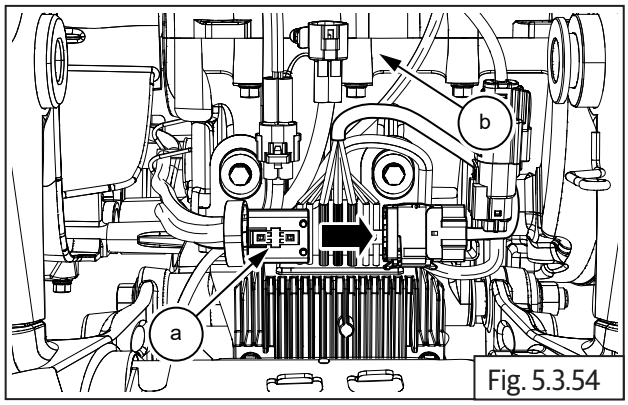

Fig. 5.3.54

- Disconnect side stand switch connector **(a)** located on rear bottom of engine **(b)**.
- Disconnect crank position sensor connector **(c)**.

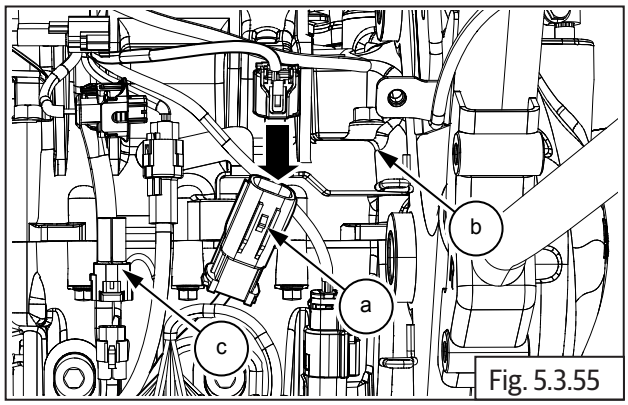

Fig. 5.3.55

5.3.26. Starter Motor Connection

- Loosen and remove Hex nut **(M6) (a)** from starter motor **(b)** to disconnect positive (+) terminal.

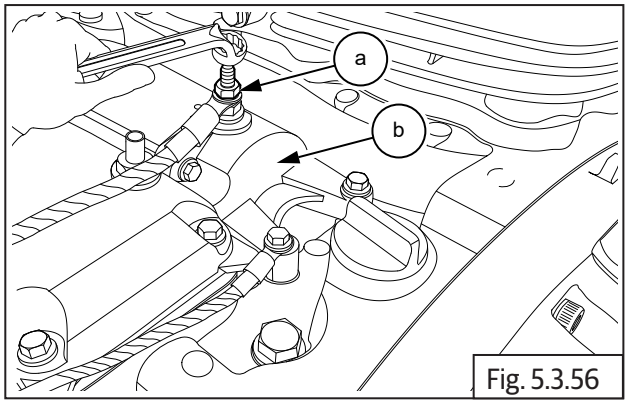

Fig. 5.3.56

	10 mm Ring Spanner

- Loosen and remove 2 Nos. Hex flange head bolt **(M6) (a)** to disconnect starter motor **(b)** negative (-) terminal.

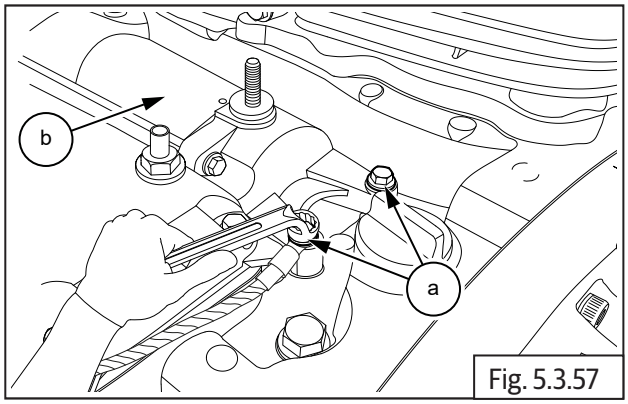

Fig. 5.3.57

	10 mm Ring spanner

5.3.27. Spark Plug Suppressor Caps on LH

- Gently pull out/disconnect spark plug suppressor cap **(a)** from LH cylinder spark plug **(b)**.

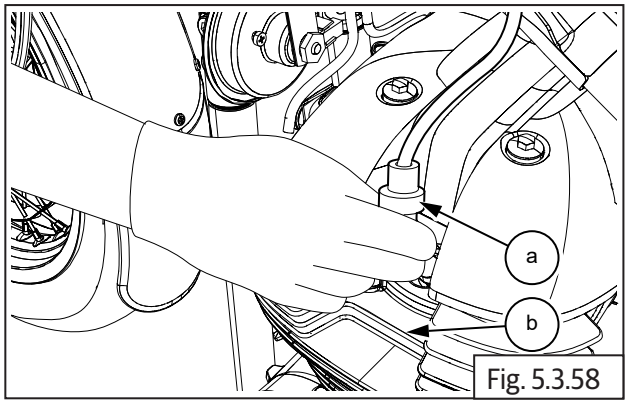

Fig. 5.3.58

- Gently pull out/disconnect spark plug suppressor cap **(a)** from RH cylinder spark plug **(b)**.

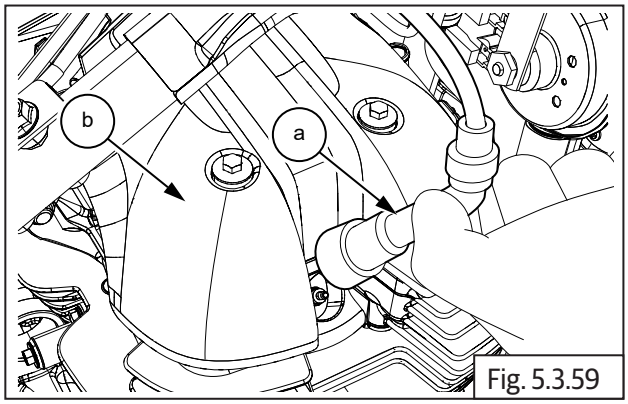

Fig. 5.3.59

5.3.28. Breather Hose Connection

(From Breather Box to Air Filter Box)

- Release the clamp **(a)** to disconnect breather hose **(b)** from air filter box **(c)**.

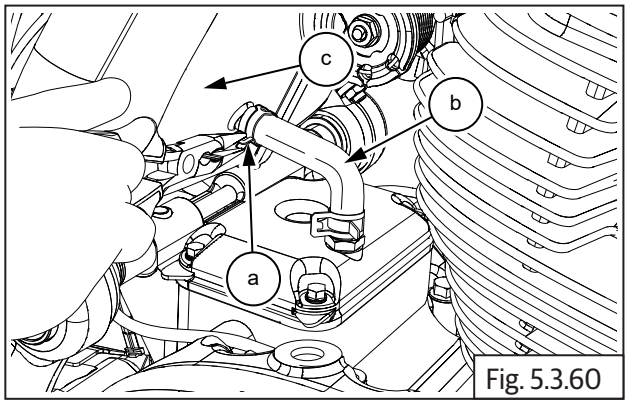

Fig. 5.3.60

	Nose plier

- Release clamp **(a)** to remove hose from breather box **(b)**.

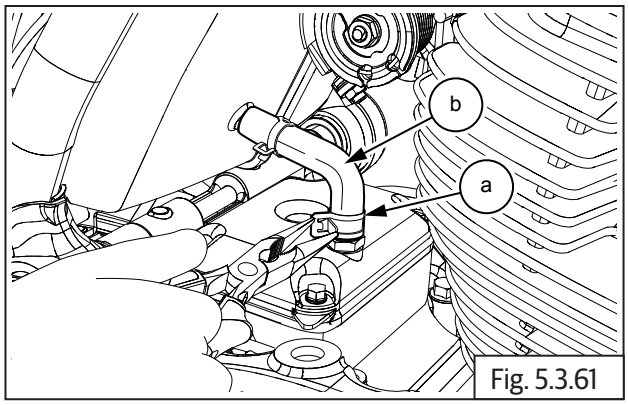

Fig. 5.3.61

	Nose plier

5.3.29. Gear Shift Linkage

- Loosen Hex bolt **(M6) (a)** to remove gear lever **(b)** from gear shaft.

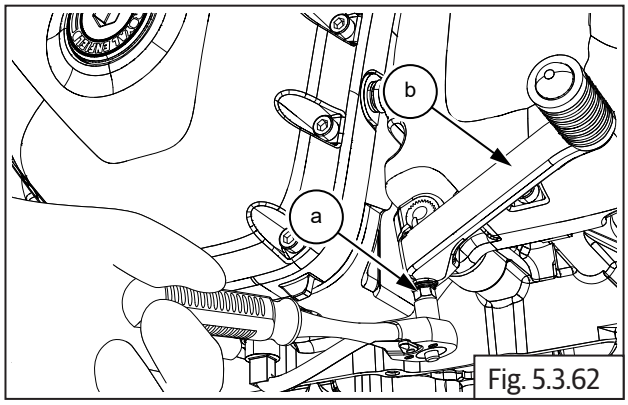

Fig. 5.3.62

	10 mm Socket with Ratchet

5.3.30. FD Sprocket Cover

- Loosen and remove 3 Nos. Hex socket head screws **(M6) (a)** from FD sprocket cover **(b)** on the LH side of engine, in the order shown (1, 2 & 3).

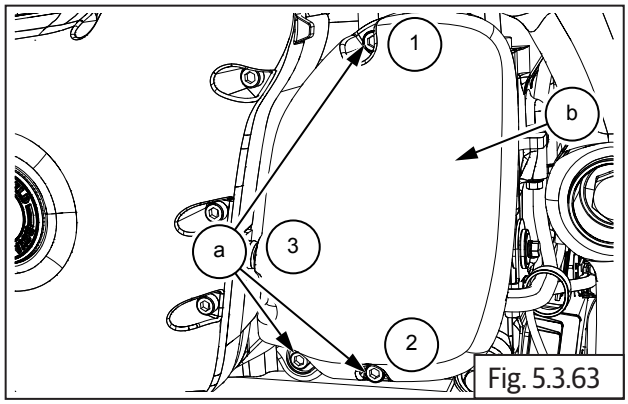

Fig. 5.3.63

	5 mm Allen socket with Ratchet

- Gently pull out FD sprocket cover **(a)**.

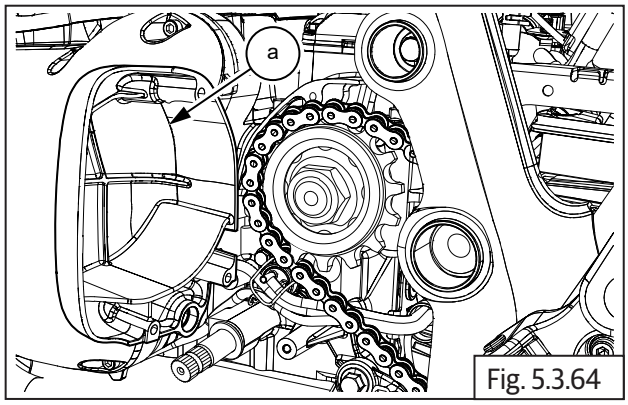

Fig. 5.3.64

5.3.31. Rear Wheel (Increasing chain slack)

- Loosen rear wheel axle nut **(M16) (a)** to increase the chain slackness/tension.

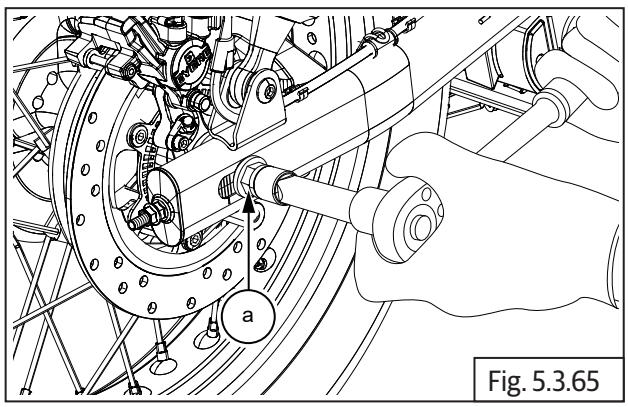

Fig. 5.3.65

	24 mm Socket with Ratchet

- Loosen chain adjuster lock nut **(M8) (a)** on LH and RH.

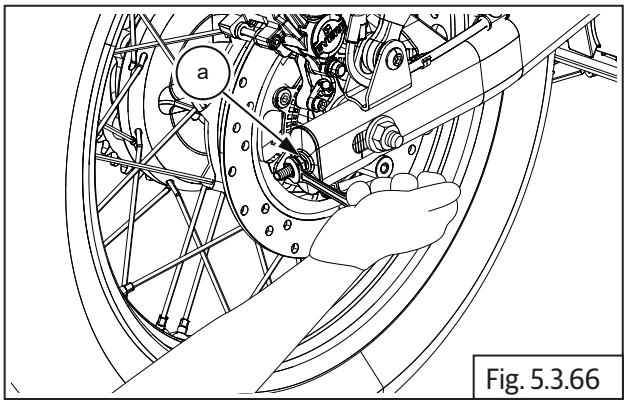

Fig. 5.3.66

	12 mm Double end spanner

5.3.32. Remove Rear Chain from FD Sprocket

- Gently remove chain **(a)** from FD sprocket **(b)**.

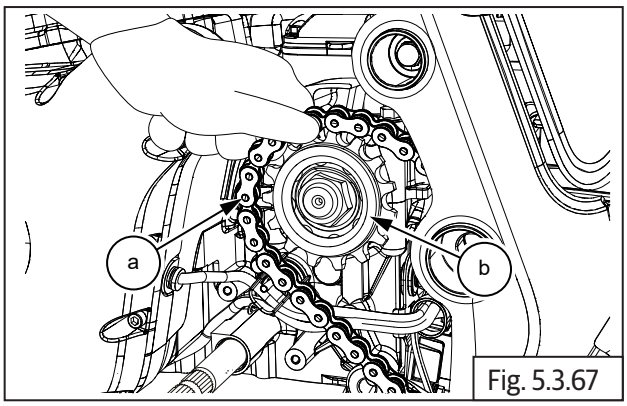

Fig. 5.3.67

5.3.33. Gear Position Indicator Sensor

- Loosen and remove 2 Nos. Hex flange head bolts **(M6) (a)**.

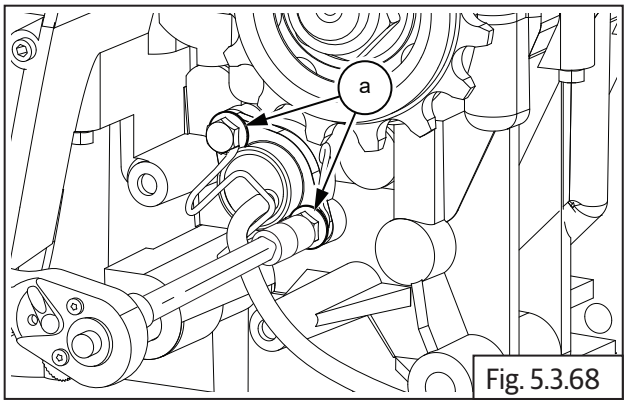

Fig. 5.3.68

	10 mm Socket with Ratchet

- Remove gear position sensor **(a)** along with the bracket **(b)**.

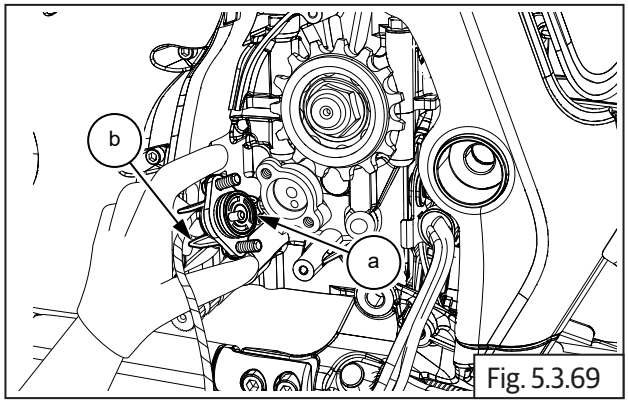

Fig. 5.3.69

5.3.34. Cradle Frame Top Mountings

Cradle Frame Top Mountings from Main Frame

- Support engine/cradle frame with scissor jack **(a)** so that it will not fall off when mounting bolts are removed.

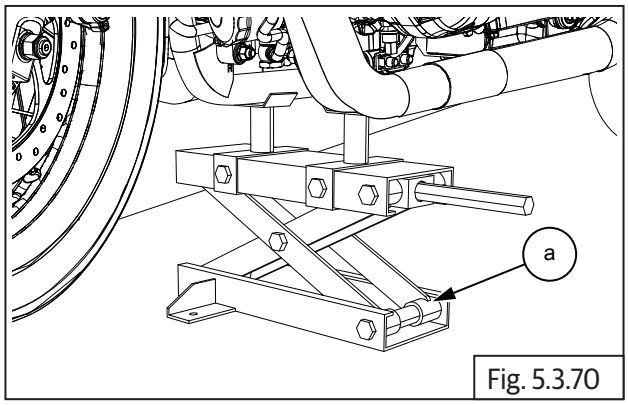

Fig. 5.3.70

- Loosen and remove 2 Nos. Hex socket head bolts **(M10) (a)** on LH and RH holding cradle frame top **(b)** on main frame **(c)**.

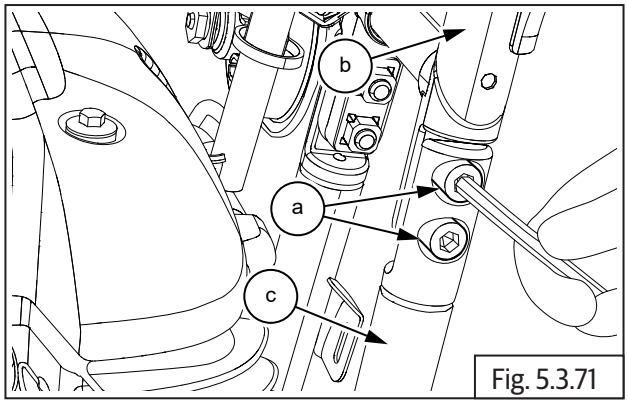

Fig. 5.3.71

	8 mm Allen socket with Ratchet

5.3.35. Cradle Frame Bottom Mountings

Cradle Frame Bottom Mounting LH and RH from Main Frame

- Locate and loosen 2 Nos. Hex socket head **(M10) (a)** on LH and RH cradle frame bottom **(b)** mounted on main frame **(c)**.

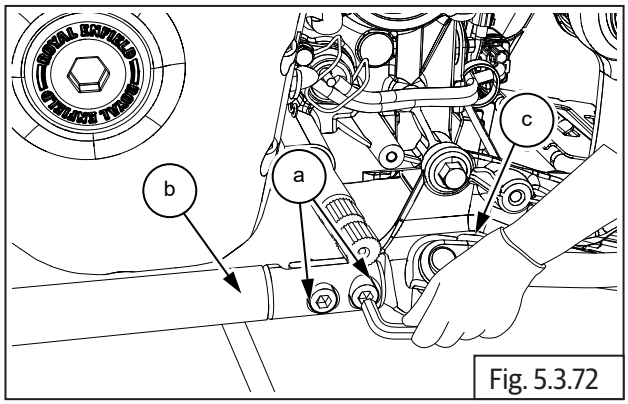

Fig. 5.3.72

	8 mm Allen socket with Ratchet

5.3.36. Rear Top Engine Mountings

Rear Top Engine Mounting from Main Frame

- Loosen and remove Hex nut **(M10) (a)** along with washer from RH top mainframe **(b)**.

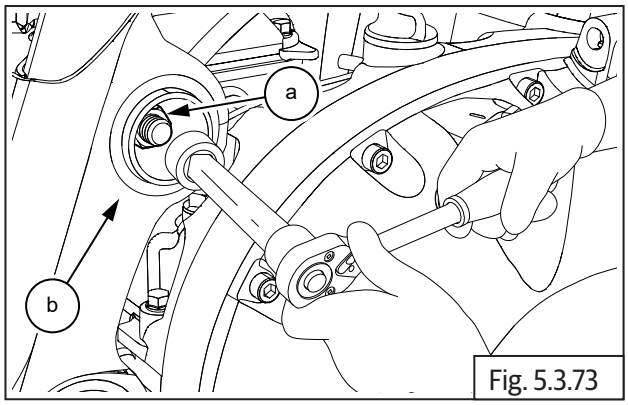

Fig. 5.3.73

	14 mm Socket with Ratchet

- Locate special tool **(a)** on main frame to loosen top mounting adjuster from frame RH on rear side of engine.

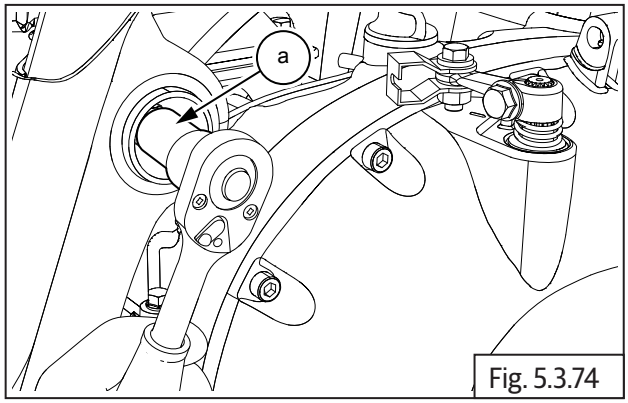

Fig. 5.3.74

SPL	Part No: ST30267/a
	Part Name: Frame Adj OD 14.8/ID 10.8 mm-Engine

- Remove Hex nut **(M10) (a)** and washer from rear lower bottom of engine RH OR clutch cover **(b)**.

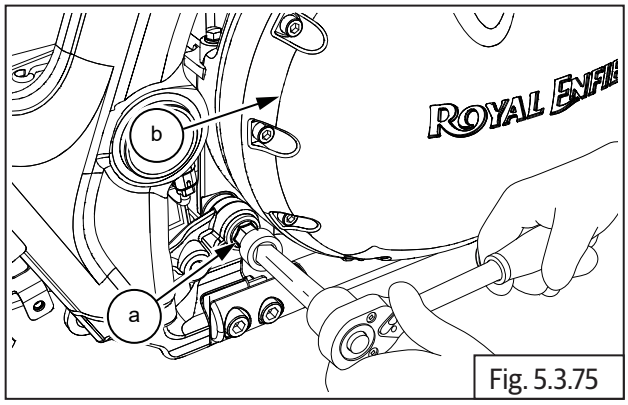

Fig. 5.3.75

	14 mm Socket with Ratchet

- Locate special tool **(a)** on rear RH lower bottom of engine to remove adjuster from frame RH.

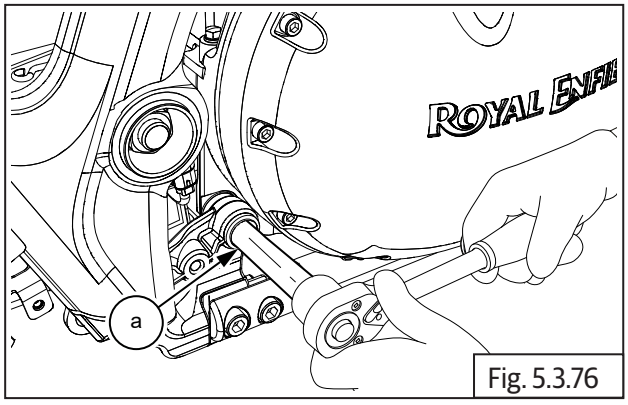

Fig. 5.3.76

SPL 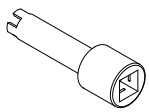	Part No: ST30268/a
	Part Name: Frame Adj OD 16.7/ID 13 mm-Engine

- Remove long bolt **(M10) (a)** from LH side of the engine **(b)**.

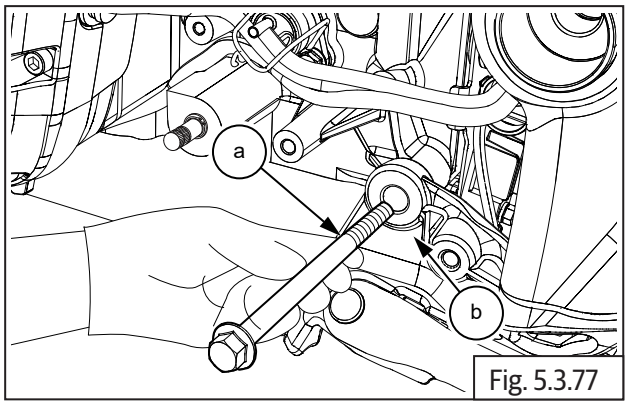

Fig. 5.3.77

5.3.37. Engine from Main Frame

Lower Bottom Support and Slide Out Engine along with Cradle Frame from Main Frame

- Ensure bottom of engine is supported suitably.
- Gently lower engine with cradle frame from main frame.

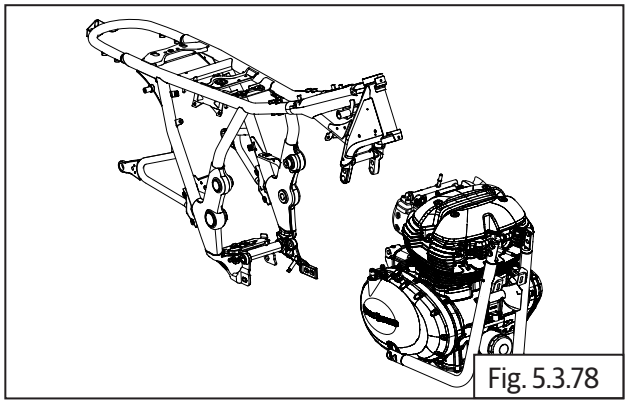
Fig. 5.3.78

5.3.38. Mounting Studs of Engine to Cradle Frame

Four Mounting Studs of Engine to Cradle Frame

- Support the engine suitably.
- Loosen and remove Hex flange head bolt **(M10) (a)** along with nut **(M10) (b)** and washers **(c)** from LH lower bottom of engine.

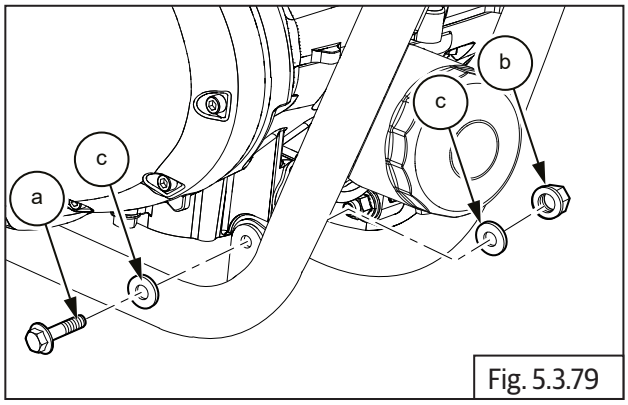

Fig. 5.3.79

	14 mm Socket with Ratchet

- Loosen and remove Hex flange head bolt **(M10) (a)** along with washer **(c)** from LH front top of engine to cradle frame **(b)**.

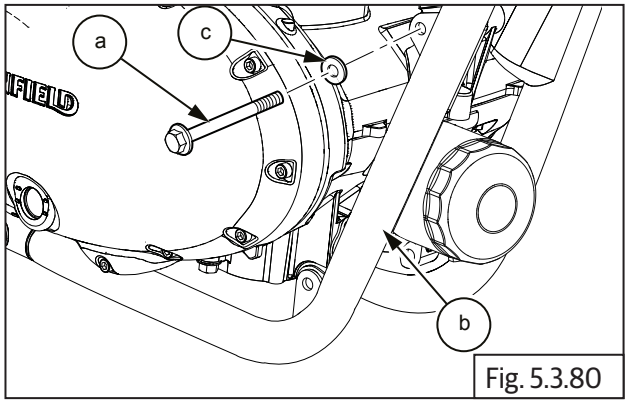

Fig. 5.3.80

	14 mm Socket with Ratchet

- Remove Hex head bolt **(M10) (a)** along with nut and washers **(b)** from engine front top mounting to cradle frame LH.

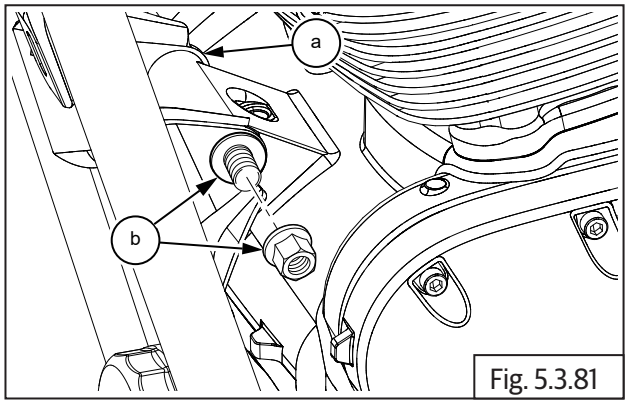

Fig. 5.3.81

	14 mm Socket with Ratchet

- Loosen and remove Hex flange head bolt **(M10) (a)** along with nut **(M10) (b)** and washers **(c)** from LH lower bottom of engine.

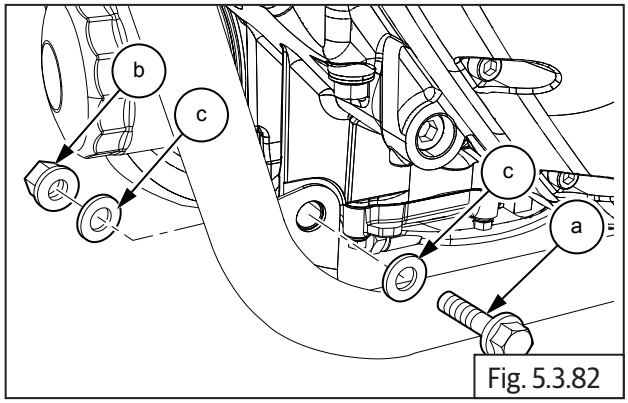

Fig. 5.3.82

	14 mm Socket with Ratchet

- Separate cradle frames **(a)** from engine **(b)** and keep it in storage bin.

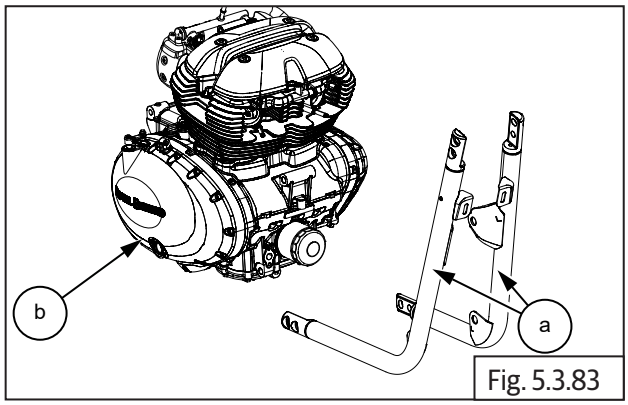

Fig. 5.3.83

ENGINE ASSEMBLY TO FRAME

CONTENTS PAGE

5.4 Engine Assembly to Frame.....166

5.4.1. Cradle Assembly RH 166

5.4.2. Cradle Assembly LH.....167

5.4.3. Cradle Frame with Engine to Mainframe 167

5.4.4. Cradle Frame Top Mountings..... 169

5.4.5. Cradle Frame Bottom Mountings 169

5.4.6. Cradle Frame Bottom Mounting RH 170

5.4.7. Cradle Frame Mounting Final Torque 170

5.4.8. Engine Cylinder Head Steady Bracket 172

5.4.9. Main Frame to Engine Mounting Bolts 173

5.4.10. Gear Position Indicator Sensor.....173

5.4.11. Rear Chain to FD sprocket.....173

5.4.12. FD Sprocket Cover 174

5.4.13. Gear Shift Linkage.....174

5.4.14. Breather Hose Connection.....174

5.4.15. Spark Plug Suppressor Caps 175

5.4.16. Starter Motor Connections.....175

5.4.17. Magneto/Side Stand Switch Connectors 176

5.4.18. Exhaust Pipe on Cylinder Head RH.....176

5.4.19. Exhaust Pipe on Cylinder Head LH 177

5.4.20. Silencer LH on Exhaust Pipe.....178

5.4.21. Silencer RH on Exhaust Pipe.....178

5.4.22. Hego/Oxygen Sensor Connectors 179

5.4.23. Throttle Body.....179

5.4.24. Air Filter Housing to Throttle Body..... 180

CONTENTS **PAGE**

5.4.25. Reed Valve Connection 180

5.4.26. Injector, TPS and Map Connections 180

5.4.27. Throttle Cables 181

5.4.28. Throttle Body Covers on LH and RH 182

5.4.29. Fuel Tank 182

5.4.30. EVAP to Fuel Tank Connections 182

5.4.31. Fuel Hose (Fuel Pump to Injector) 182

5.4.32. Fuel Level Sensor and Fuel Pump 183

5.4.33. Clutch Cable 183

5.4.34. Battery Connections 184

5.4.35. Seat Assembly 185

5.4.36. Side Panel LH and RH 185

5.4.37. Oil Filter 185

5.4.38. Oil Cooler Mountings to Frame 185

5.4.39. Oil Cooler Inlet and Outlet Pipes 186

5.4.40. Drain Bolt and Engine Oil Re-fill 186

Engine Assembly into Main Frame

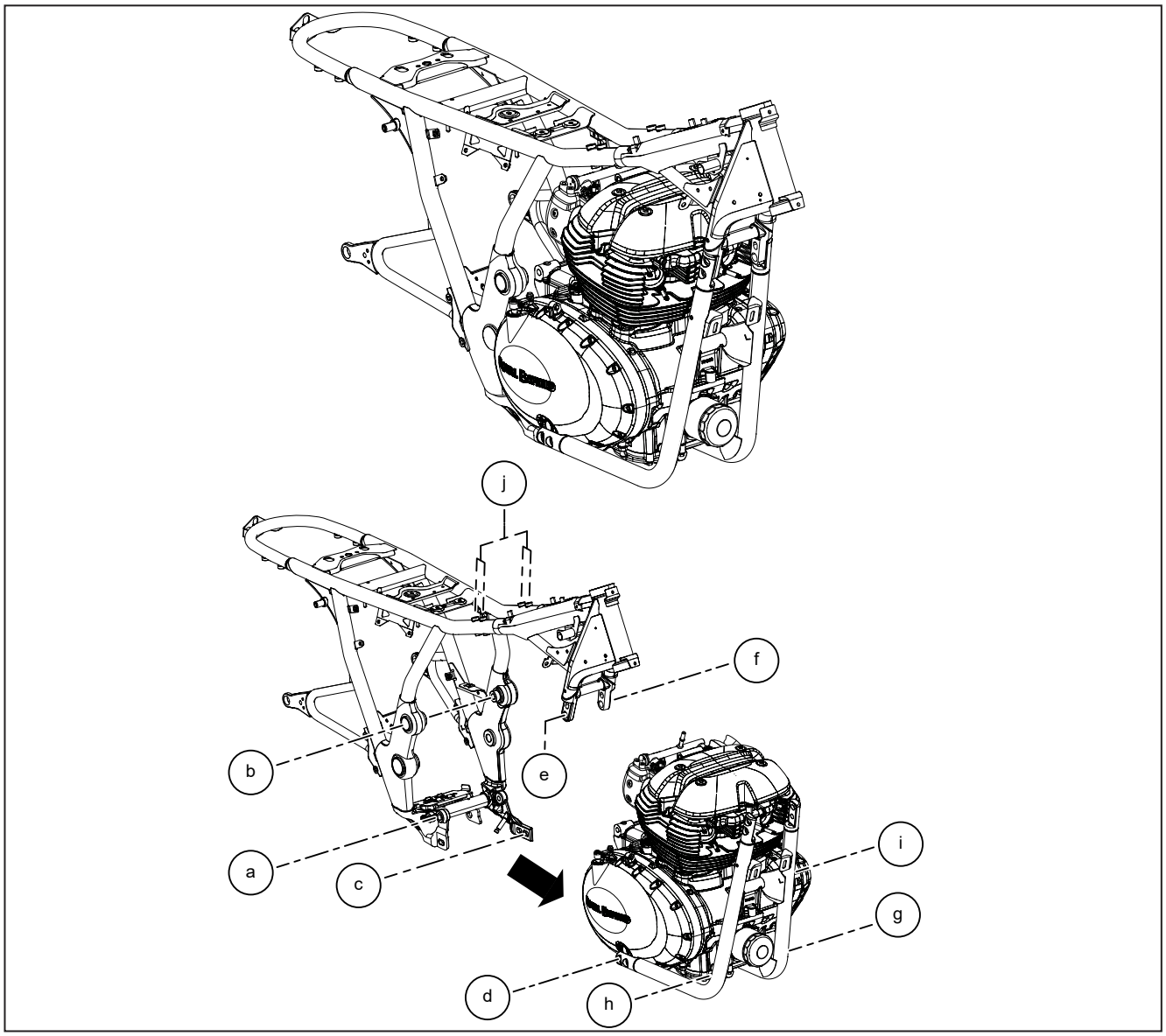

Item No.	Description	Quantity
a	Crankcase Rear Lower Mounting to Frame	1
b	Crankcase Rear Upper Mounting to Frame	1
c	Rear LH Cradle Frame Bottom into Main Frame	1
d	Rear RH Cradle Frame Bottom into Main Frame	1
e	Rear RH Cradle Frame Top into Main Frame	1
f	Front LH Cradle Frame Top into Main Frame	1
g	Crankcase Front Lower to Cradle Frame LH	1
h	Crankcase Front Lower to Cradle Frame RH	1
i	Crankcase Front Upper to Cradle Frame	1
j	Engine Steady Bracket Mounting to Frame	2

Cradle Frame Assembly into Engine

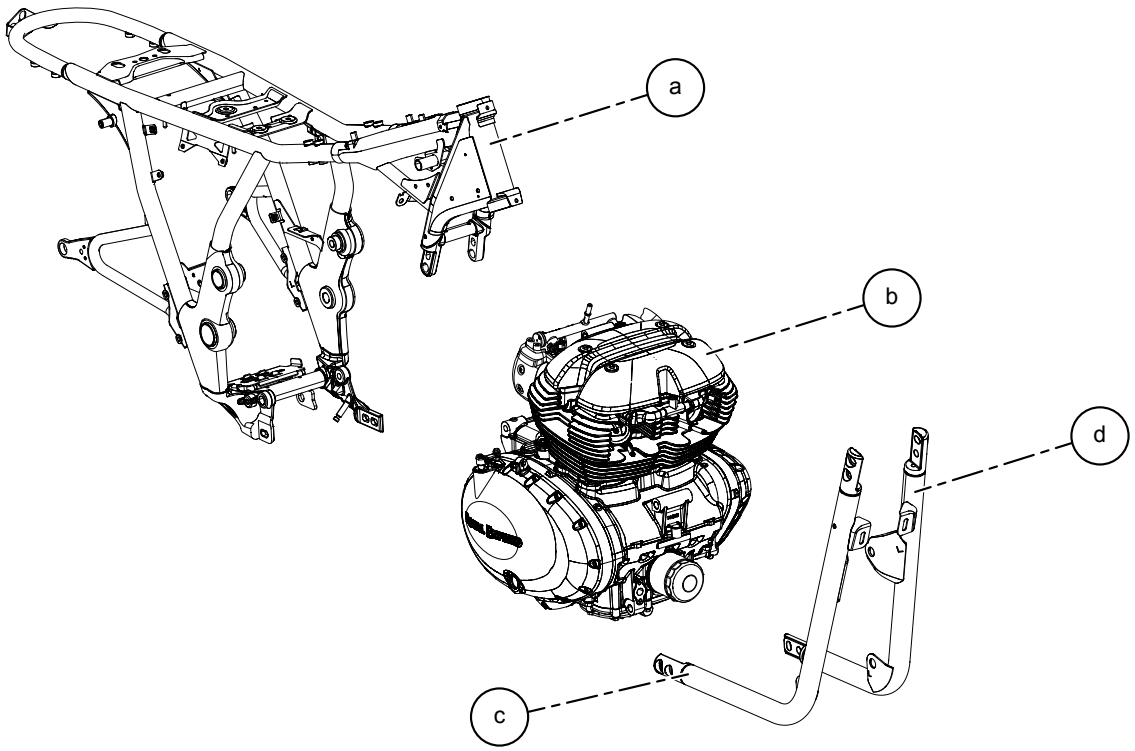

Item No.	Description	Quantity
a	Engine Main Frame	
b	Engine Assembly	1
c	Cradle Frame LH	1
d	Cradle Frame RH	1

Engine Mounting Bolts

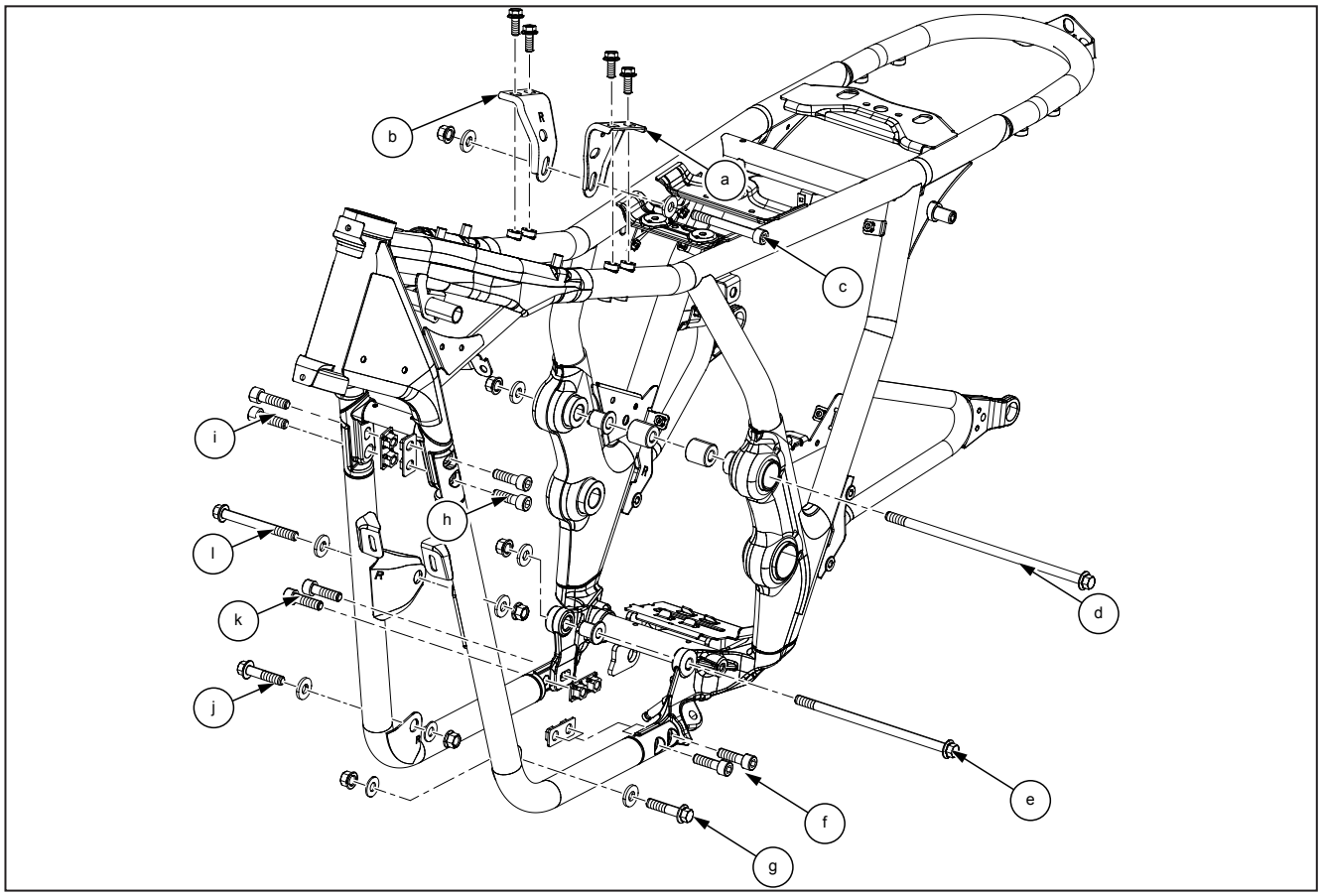

Item No.	Description	Quantity
a	Engine Steady Bracket to Frame LH	1
b	Engine Steady Bracket to Frame RH	1
c	Engine Steady Bracket to Cylinder Top Mounting	1
d	Engine Rear Top Mounting	1
e	Engine Rear Bottom Mounting	1
f	Cradle Frame Rear LH	2
g	Front Crankcase Lower LH	1
h	Cradle Frame Top LH	2
i	Cradle Frame Top RH	2
j	Front Crankcase Lower RH	1
k	Cradle Frame Rear RH	2
l	Engine Front Mounting	1

COMPONENTS ASSEMBLY SEQUENCE TO ASSEMBLE ENGINE INTO FRAME - FLOW CHART

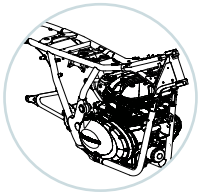

Assemble cradle frame to engine using four mounting bolts

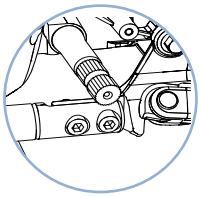

Support engine with cradle frame assembly and position into main frame from LH side

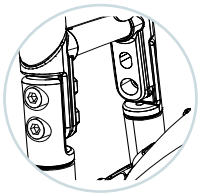

Align cradle frame with main frame mounting holes and locate front and rear mounting bolts

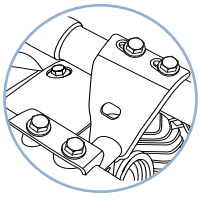

Position engine steady bracket LH and RH on engine rear top and tighten with bolts

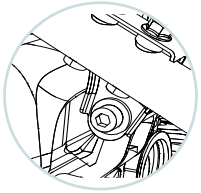

Align steady bracket mounting holes to frame and tighten with bolt

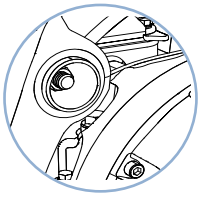

Centralize engine to rear frame, top and center mountings and tighten adjusters using special tools

C

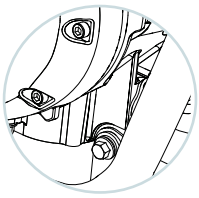

Assemble washers and nuts on mounting bolts and tighten cradle frame to main frame

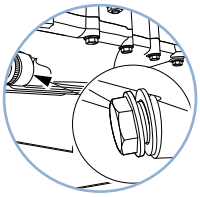

Assemble engine drain bolt

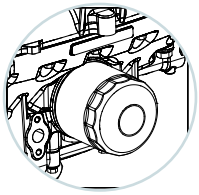

Assemble oil filter

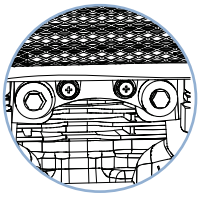

Assemble oil cooler on frame

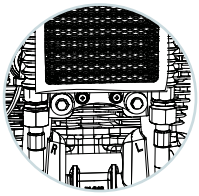

Assemble oil cooler inlet and outlet pipes to engine

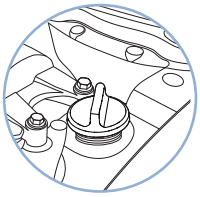

Fill engine oil

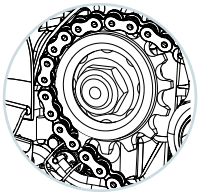

Assemble FD sprocket on drive shaft

C

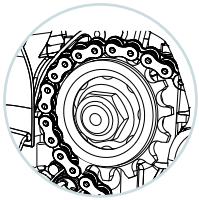

Assemble rear chain on FD sprocket

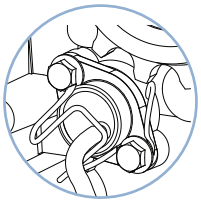

Assemble gear position indicator sensor with bracket on engine LH side

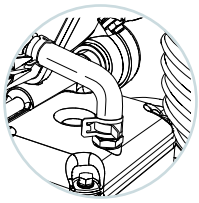

Connect breather hose between breather and air filter

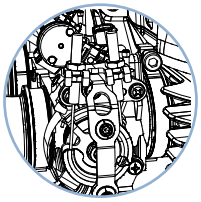

Assemble throttle body on engine

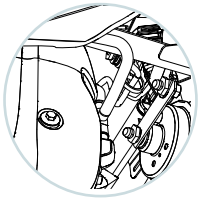

Connect reed valve hose

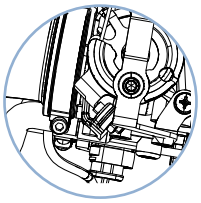

Connect air inlet hoses to throttle body

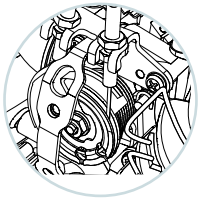

Connect throttle cables to throttle body

C

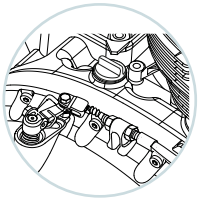

Connect clutch cable

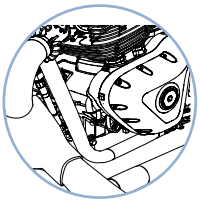

Assemble LH and RH exhaust pipe and silencer

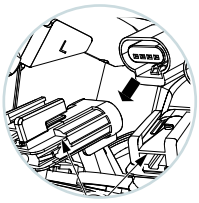

Connect Hego/Oxygen sensor connectors to main wiring harness

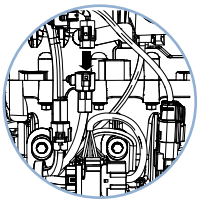

Connect Magneto/Side stand switch connectors to wiring harness

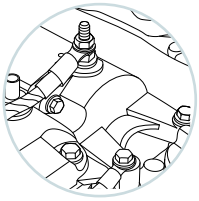

Assemble starter motor and wiring connections

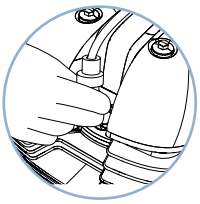

Locate spark plug suppressor caps on LH and RH spark plugs

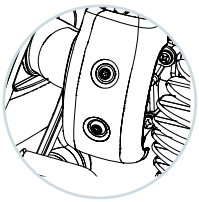

Assemble throttle body covers on LH and RH sides of throttle body

C

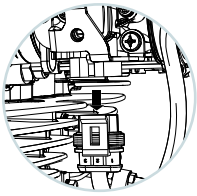

Connect Injector, TPS and Map Sensor connectors to wiring harness

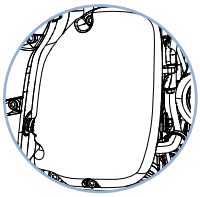

Assemble FD sprocket cover

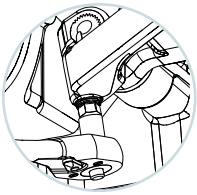

Assemble gear shift linkage to gear shaft

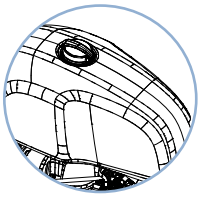

Position fuel tank on frame

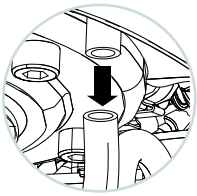

Connect EVAP and drain hoses to fuel tank

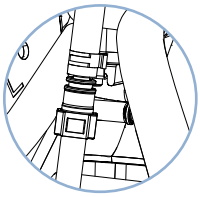

Connect fuel feed hose (fuel pump to injector)

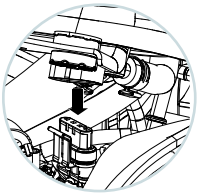

Connect fuel level sensor and fuel pump connector to wiring harness

C

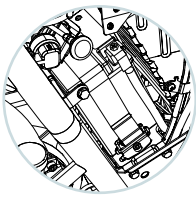

Position battery in carrier and connect positive (+) and negative (-) terminals.
(Ensure ignition and stop switches are in OFF position before connecting battery cables)

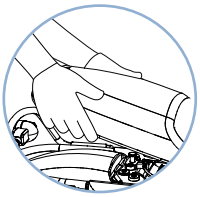

Assemble seat



Assemble side panel LH and RH

5.4 Engine Assembly to Frame

5.4.1. Cradle Assembly RH

⚠ WARNING

DO NOT tighten bolts during initial installation.

- Support engine suitably and firmly on a work table and ensure it is stable.
- Locate cradle frame RH **(a)** on engine RH side **(b)**.

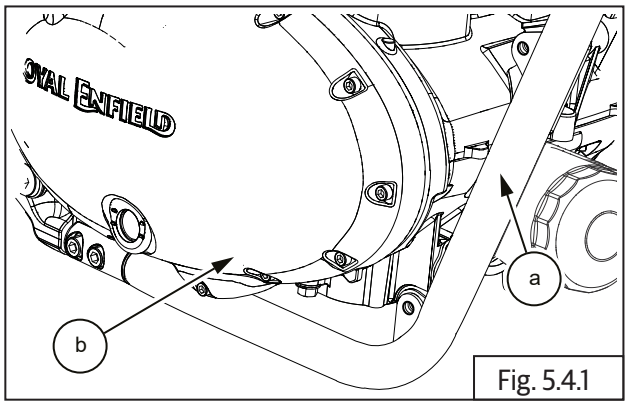

Fig. 5.4.1

- Align mounting holes **(a)** of cradle frame with mounting holes on engine.

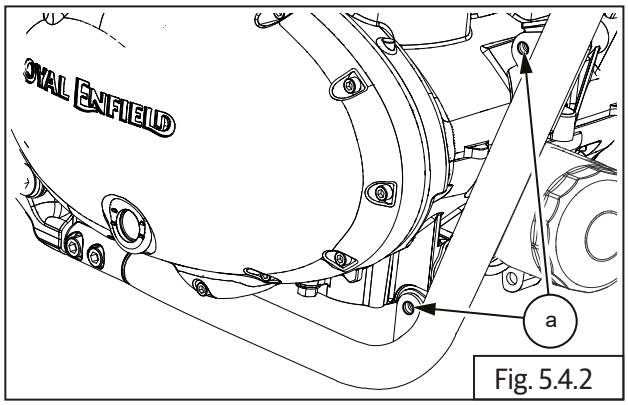

Fig. 5.4.2

- Insert Hex head bolt long **(M10) (a)** with washer **(c)** into mounting holes on cradle frame RH top **(b)**. **DO NOT TIGHTEN FULLY**.

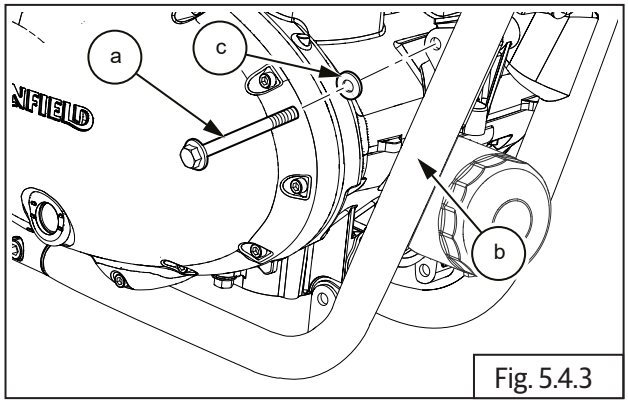

Fig. 5.4.3

- Insert Hex head bolt small **(M10) (a)** into mounting holes on cradle frame RH **(b)** bottom.
- Assemble washer and nut **(c)** on bolt. **DO NOT TIGHTEN FULLY**.

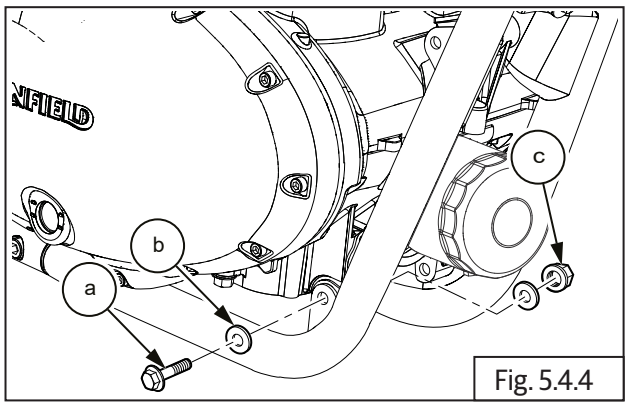

Fig. 5.4.4

	14 mm Ring spanner and 14 mm Hex socket with Ratchet

5.4.2. Cradle Assembly LH

- Locate cradle frame LH on engine LH side, duly ensuring top mounting on cradle frame is located on bolt.
- Assemble washer and Hex nut **(M10) (a)** on long bolt **(b)** on LH and tighten nut just sufficiently. **DO NOT TIGHTEN FULLY**.

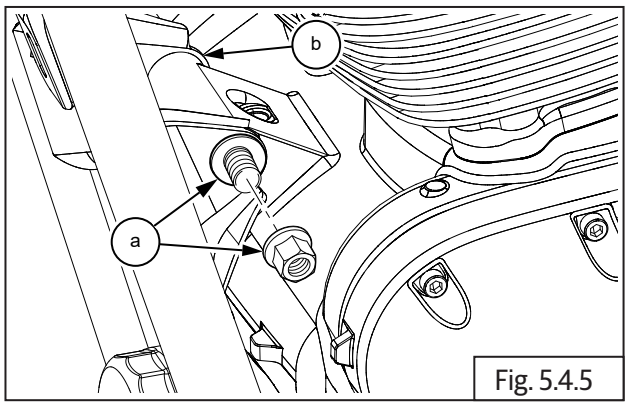

Fig. 5.4.5

- Align bottom mounting hole of cradle frame LH **(a)** with mounting hole on engine **(b)**.

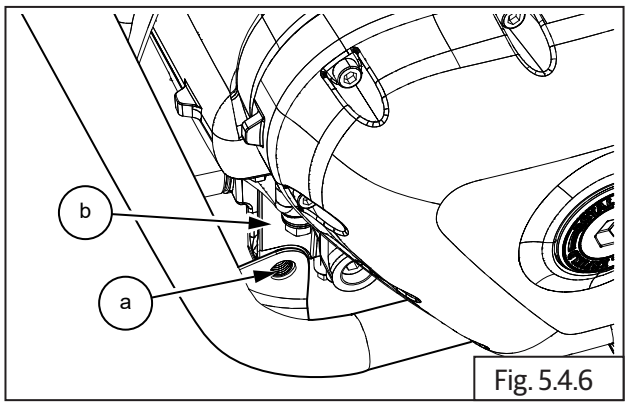

Fig. 5.4.6

- Insert Hex head bolt small **(M10) (a)** along with washer **(b)** into bottom mounting hole on cradle frame front LH **(d).**
- Assemble washer **(b)** and nut **(c)**. Tighten just sufficiently. **DO NOT TIGHTEN FULLY**.

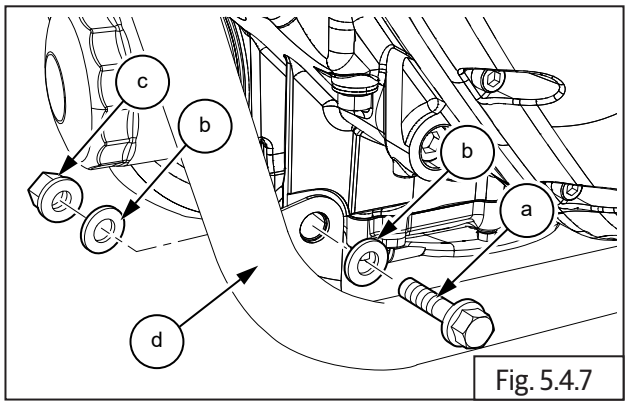

Fig. 5.4.7

5.4.3. Cradle Frame with Engine to Mainframe

NOTE

- *Ensure motorcycle is upright on a firm and flat surface.*
- *Ensure the front and rear wheels are clamped firmly to motorcycle ramp.*
- *Slide the cradle frames with engine into main frame only from the LH side and with rear end of engine into mainframe first.*
- *Ensure frame adjusters at rear end of mainframe and all other mounting holes are aligned correctly with cradle frames for ease of assembly.*
- *Lift engine with cradle frame into mainframe by suitable supporting from the bottom of engine.*

- Insert Hex flange head bolt long **(M10)** into bottom rear mounting on frame LH.

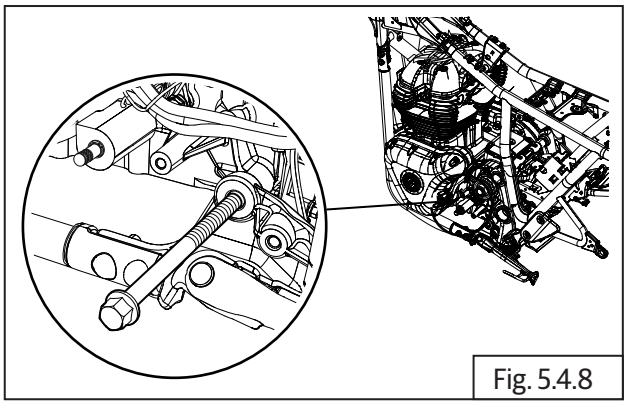
Fig. 5.4.8

- Insert adjuster **(a)** on rear bottom frame **(b)**.

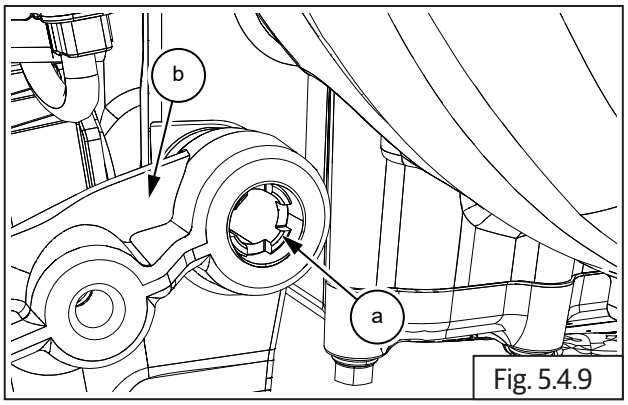

Fig. 5.4.9

- Place special tool on adjuster **(a)** and gently adjust till frame holds engine properly.

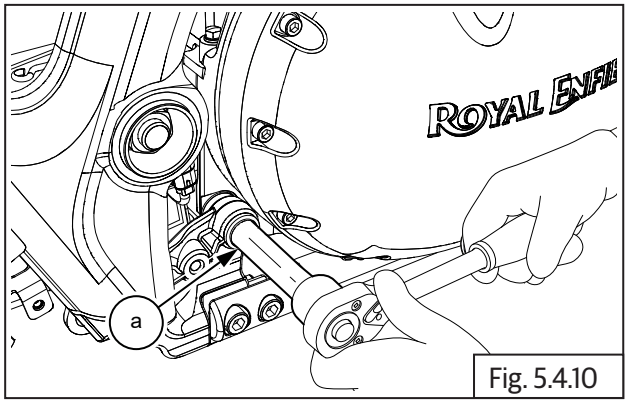

Fig. 5.4.10

SPL	Part No:ST30268/a
	Part Name: Frame Adj OD 16.7/ID 13 mm-Engine with Ratchet

- Insert thick washer **(a)** and Hex nut **(M10) (b)** into other end of lower rear crankcase mounting bolt **(c)** and gently tighten nut **(b)**.

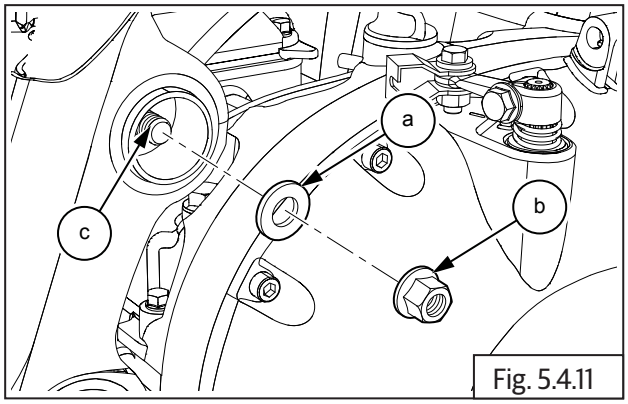

Fig. 5.4.11

	14 mm Socket with Ratchet

- Insert Hex head flanged mounting bolt **(M10) (a)** on engine rear top from LH frame along with spacer **(b)**. **DO NOT TIGHTEN FULLY**.

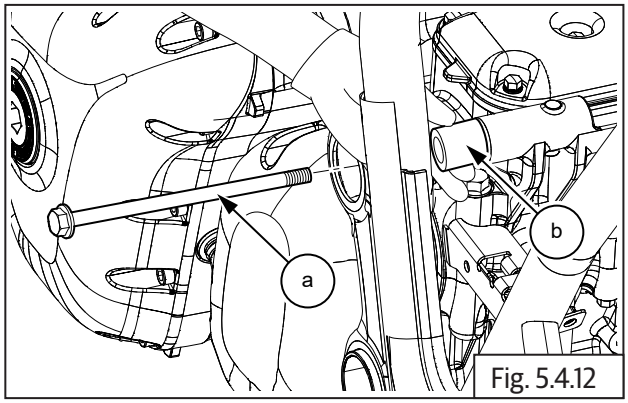

Fig. 5.4.12

- Gently locate RH spacer **(a)** on rear top of RH frame.

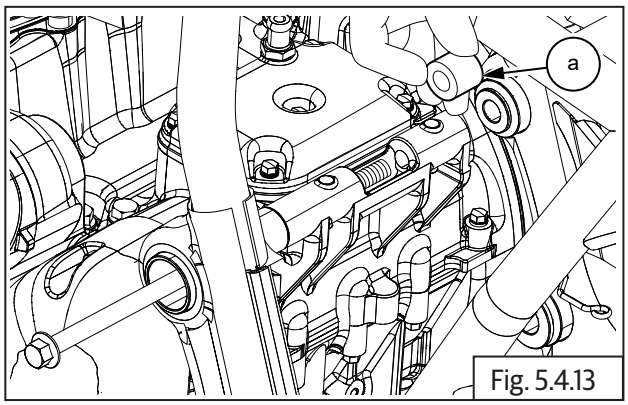

Fig. 5.4.13

- Place special tool on adjuster **(a)** on RH and gently adjust to align the engine to frame.

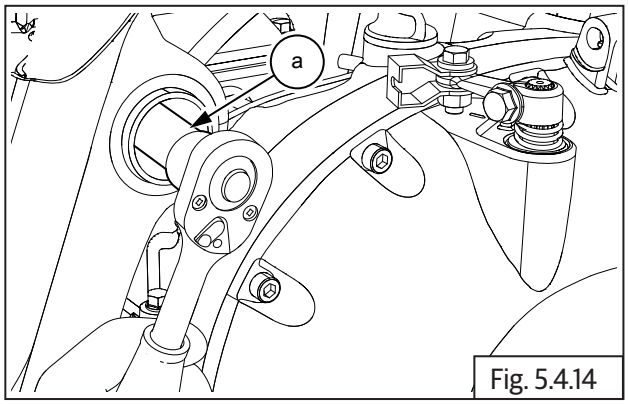

Fig. 5.4.14

SPL	Part No: ST30267/a
	Part Name: Frame adjuster OD 14.8/ID 10.8 mm engine

- Locate thick washer **(a)** along with Hex nut **(M10) (b)** on other end of crankcase mounting bolt **(c)** on cradle frame RH. Tighten the nut just sufficiently.

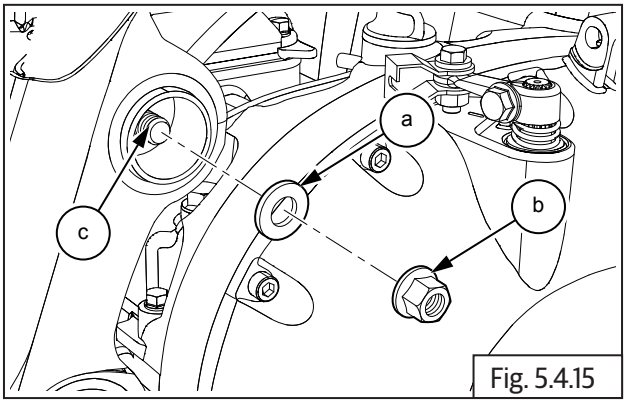

Fig. 5.4.15

	14 mm Socket with Ratchet

5.4.4. Cradle Frame Top Mountings

Cradle Frame Top Mountings to Main Frame

- Locate 2 Nos. Hex socket bolts **(M10) (a)** and nut, locating back plate **(b)** on RH cradle frame top to main frame. **DO NOT TIGHTEN FULLY**.

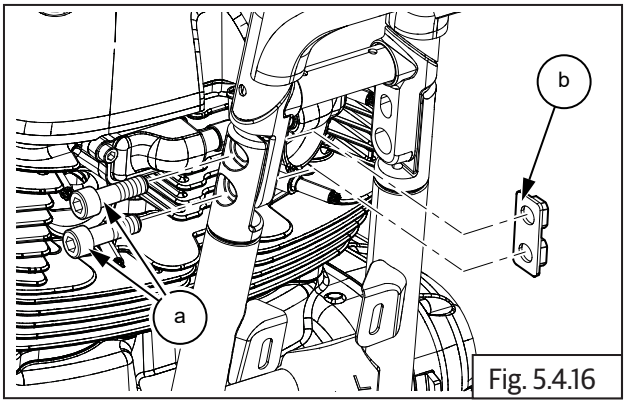

Fig. 5.4.16

- Locate back plate **(a)** with 2 Nos. Hex socket bolts **(M10) (b)** on LH cradle frame top to main frame. **DO NOT TIGHTEN FULLY**.

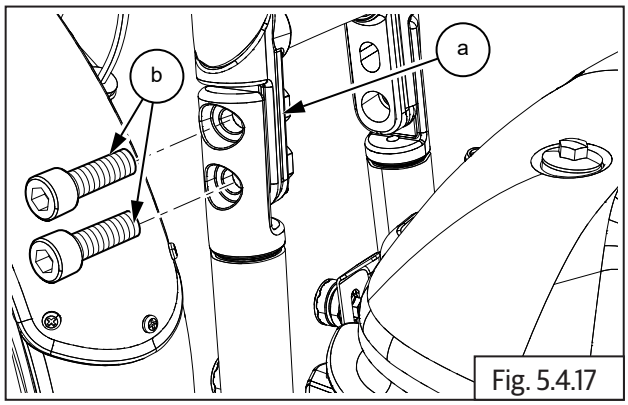

Fig. 5.4.17

5.4.5. Cradle Frame Bottom Mountings

Cradle Frame Bottom Mounting LH to Main Frame

- Align lower part of cradle frame to main frame LH.
- Locate back plate **(a)** with 2 Nos. Hex socket bolts **(M10) (b)** on rear LH cradle frame bottom to main frame. **DO NOT TIGHTEN FULLY**.

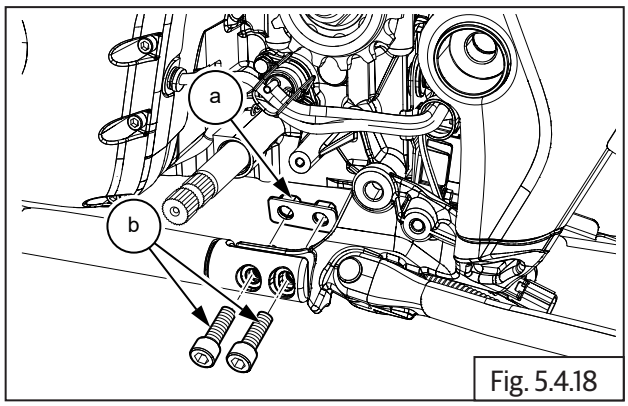

Fig. 5.4.18

5.4.6. Cradle Frame Bottom Mounting RH

Cradle Frame Bottom Mounting RH to Main frame

- Align lower part of cradle frame to main frame RH.
- Locate back plate **(a)** with 2 Nos. Hex socket bolts **(M10) (b)** on rear RH cradle frame bottom to main frame. **DO NOT TIGHTEN FULLY.**

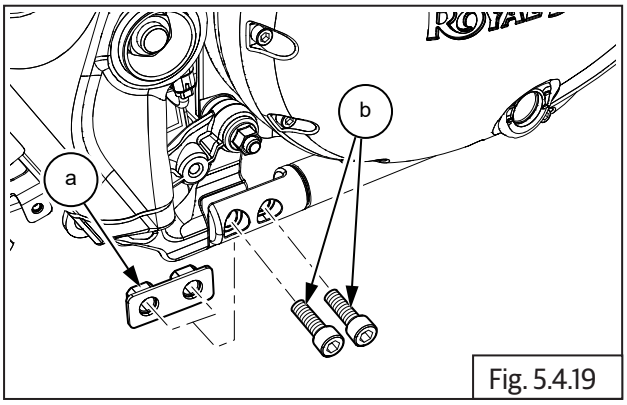

Fig. 5.4.19

5.4.7. Cradle Frame Mounting Final Torque

Cradle Frame to Engine Mounting Final Torque

- Hold Hex nut **(M10) (a)** and tighten the bolt to specified torque.

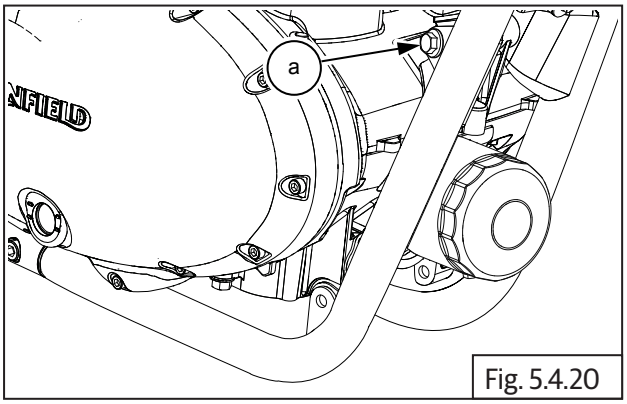

Fig. 5.4.20

	14 mm Ring spanner and 14 mm Hex socket with Torque wrench
Torque	45 N-m/4.5 kgf-m

- Tighten Hex head bolt **(M10) (a)** into mounting holes on cradle frame RH bottom to torque.

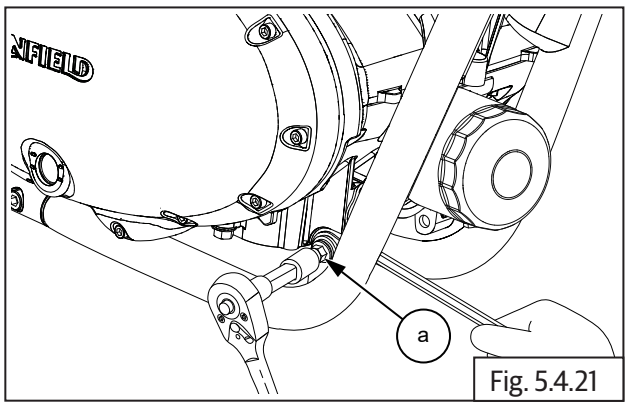

Fig. 5.4.21

	14 mm Ring spanner and 8 mm Allen socket with Torque wrench

- Tighten 2 Nos. Hex socket bolts **(M10) (a)** on front LH cradle frame to main frame.

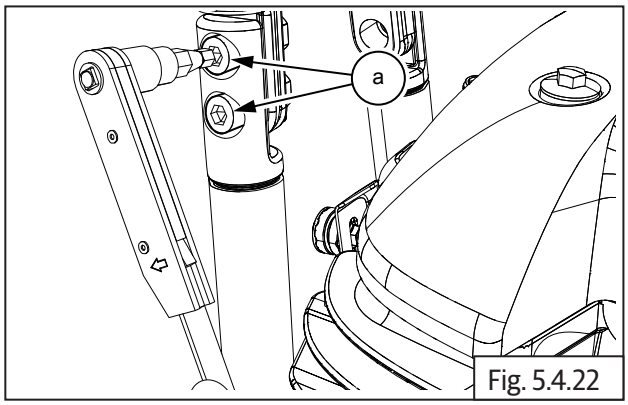

Fig. 5.4.22

	8 mm Allen socket with Torque wrench
Torque	45 N-m/4.5 kgf-m

- Tighten 2 Nos. Hex socket bolts **(M10) (a)** on front RH cradle frame to main frame.

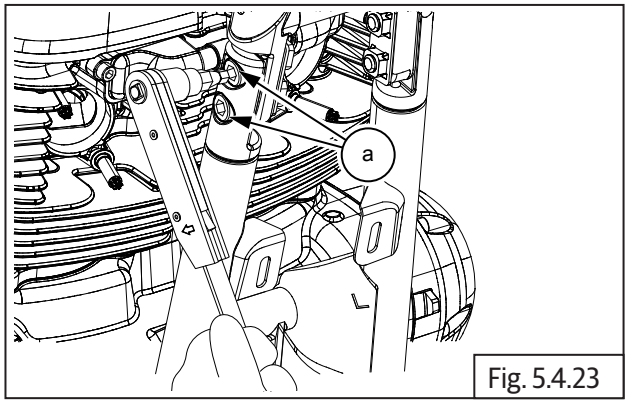

Fig. 5.4.23

	8 mm Allen socket with Torque wrench
Torque	45 N-m/4.5 kgf-m

- Tighten 2 Nos. Hex socket bolts **(M10) (a)** on rear RH cradle frame to main frame to torque.

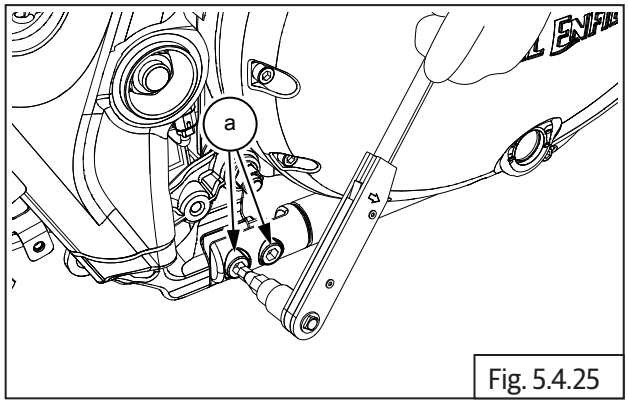

Fig. 5.4.25

	8 mm Allen socket with Torque wrench
Torque	45 N-m/4.5 kgf-m

- Tighten 2 Nos. Hex socket bolts **(M10) (a)** on rear LH cradle frame to main frame.

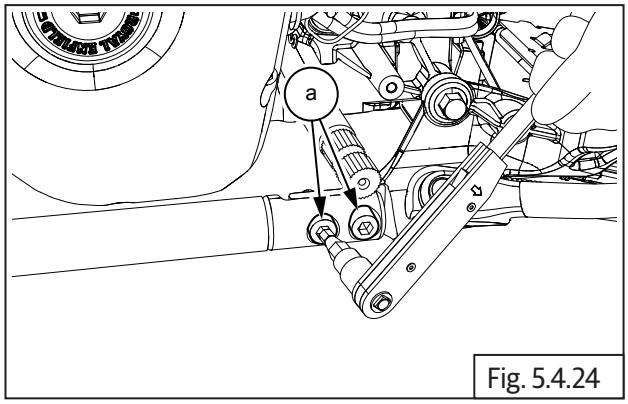

Fig. 5.4.24

	8 mm Allen socket with Torque wrench
Torque	45 N-m/4.5 kgf-m

- Hold nut and tighten upper front crankcase mounting Hex bolt **(M10) (a)** to torque.

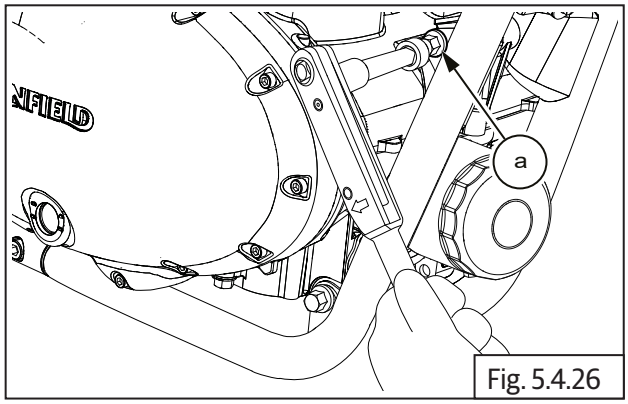

Fig. 5.4.26

	8 mm Allen socket with Torque wrench
Torque	45 N-m/4.5 kgf-m

- Hold nut and tighten lower front crankcase mounting Hex bolt **(M10) (a)** to torque.

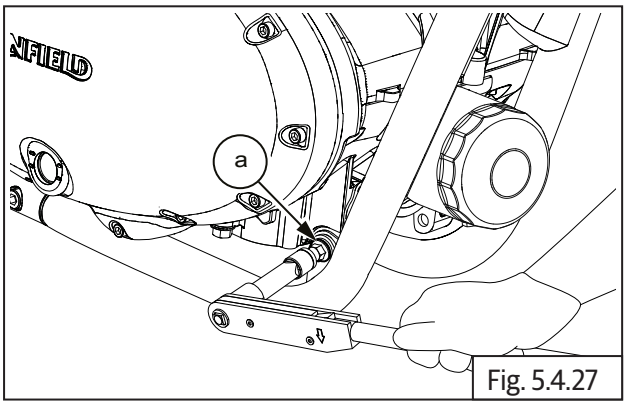

Fig. 5.4.27

	Torque wrench and 14 mm Socket with Ratchet
Torque	45 N-m/4.5 kgf-m

5.4.8. Engine Cylinder Head Steady Bracket

- Locate the steady brackets **(a)** into LH and RH frames **(b)**.

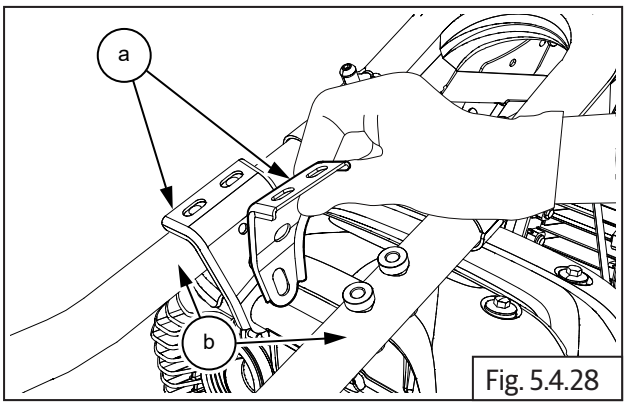

Fig. 5.4.28

- Locate and tighten 4 Nos. Hex bolts **(M8) (a)** on brackets **(b)** holding main frame to torque.

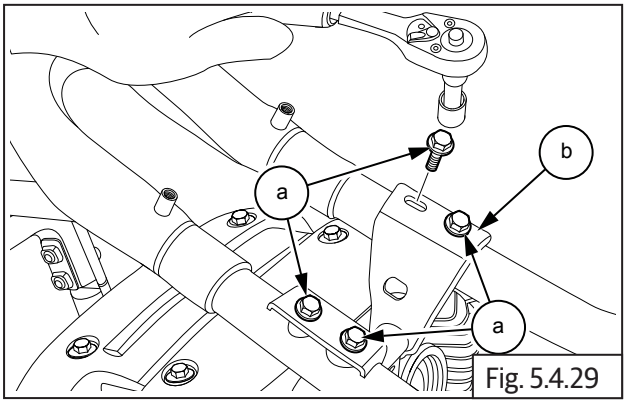

Fig. 5.4.29

	12 mm Socket with Ratchet
Torque	25 N-m/2.5 kgf-m

- Insert Hex socket bolt **(M10) (a)** from LH steady bracket into RH steady bracket **(b)**.
- Hold LH Hex socket bolt with suitable tool.

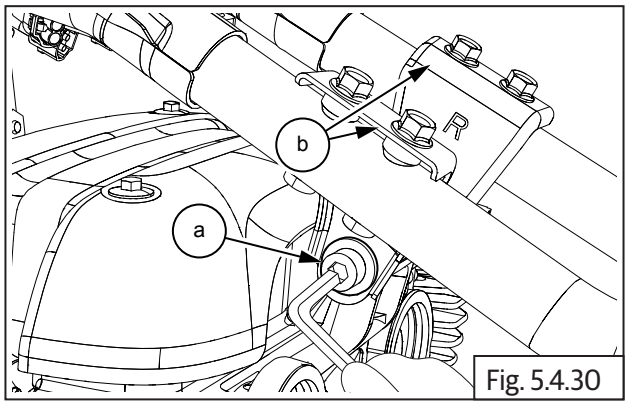

Fig. 5.4.30

	8 mm Allen socket with Ratchet

- Assemble washer and Hex nut **(M10) (a)** from RH and tighten nut to specified torque.

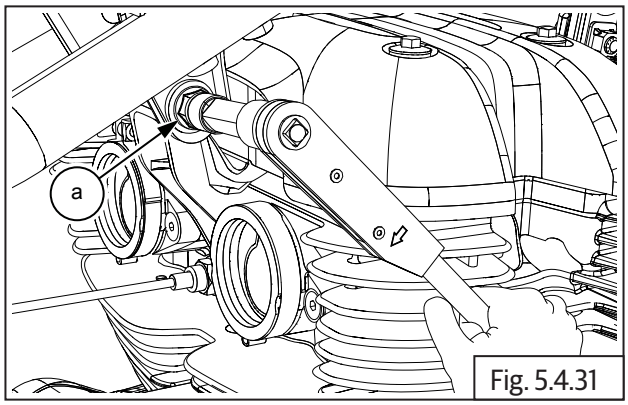

Fig. 5.4.31

	14 mm Socket with Torque wrench
Torque	45 N-m/4.5 kgf-m

5.4.9. Main Frame to Engine Mounting Bolts

- Tighten lower rear crankcase mounting nut **(a)** to specified torque.

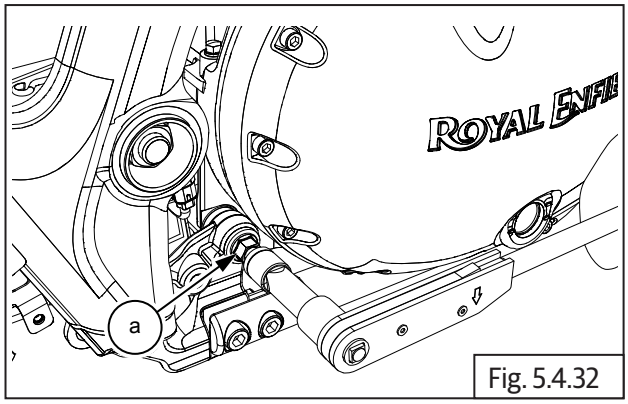

Fig. 5.4.32

	14 mm Socket with Torque wrench
Torque	45 N-m/4.5 kgf-m

- Tighten upper rear crankcase mounting nut **(a)** to specified torque.

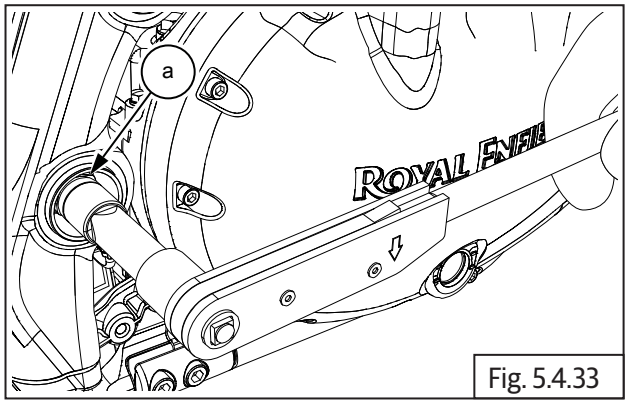

Fig. 5.4.33

	14 mm Socket with Torque wrench
Torque	45 N-m/4.5 kgf-m

- Remove support from bottom of engine after ensuring all mounting fasteners to cradle frame and mainframe are correctly torqued to specifications.

5.4.10. Gear Position Indicator Sensor

- Connect gear position sensor **(a)** to connector **(b)** located behind engine.

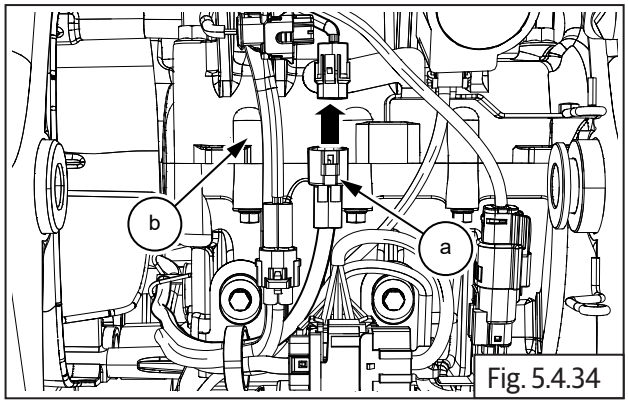

Fig. 5.4.34

5.4.11. Rear Chain to FD sprocket

- Loosen rear wheel mountings and chain adjusters and push rear wheel into swing arm to increase chain slack.
- Position rear chain over FD sprocket teeth properly.
- Assemble chain **(a)** on FD sprocket **(b)**.

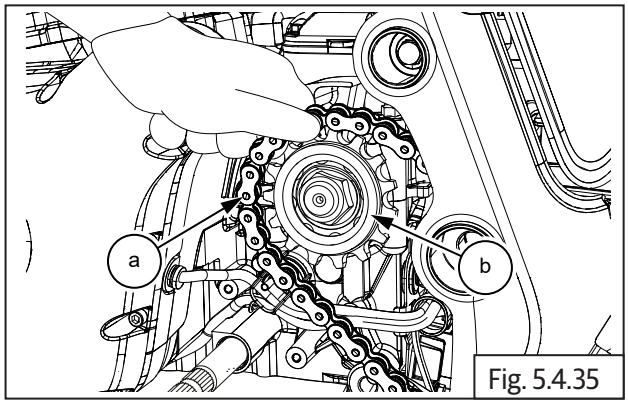

Fig. 5.4.35

- Adjust rear chain tension to specification: 30 mm to 40 mm (section 6.8.9).

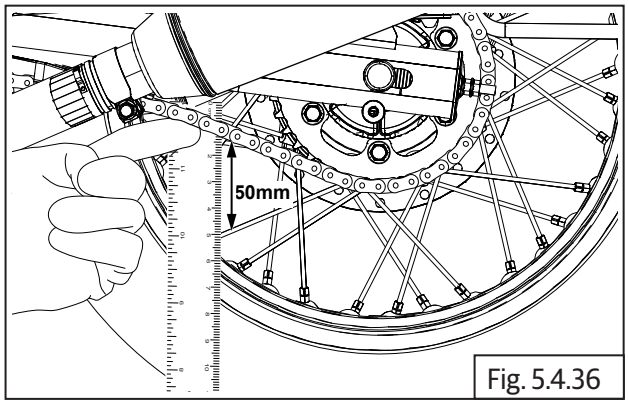

Fig. 5.4.36

- Tighten rear wheel axle nut (section 6.8.8).

5.4.12. FD Sprocket Cover

- Assemble FD sprocket cover **(a)** on crankcase LH.
- Locate 3 Nos. Hex socket head bolts **(M6) (b)** on FD sprocket cover and tighten in a crisscross pattern to specified torque.

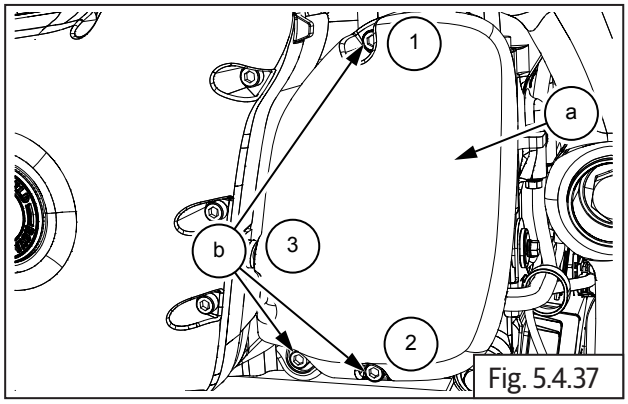

Fig. 5.4.37

	5 mm Allen socket and Torque wrench
Torque	10 N-m/1 kgf-m

5.4.13. Gear Shift Linkage

- Assemble gear shift lever **(a)** on shaft at an angle such that it is parallel to foot rest.
- Locate Hex bolt **(M6) (b)** on gear lever and tighten to specified torque.

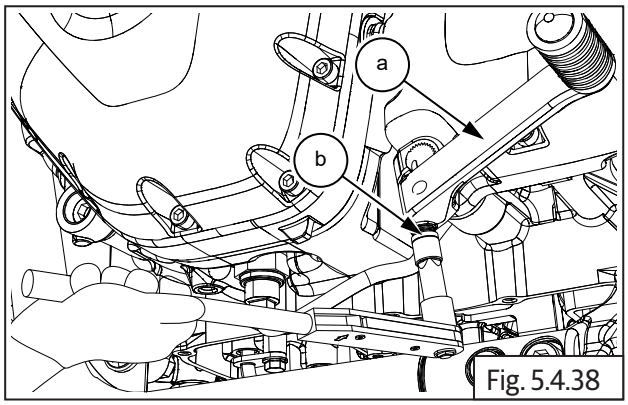

Fig. 5.4.38

	10 mm socket and Torque wrench
Torque	10 N-m/1 kgf-m

5.4.14. Breather Hose Connection

Breather Hose Connection to Breather Box to Air Filter

- Insert the shorter end of hose **(b)** on the tube in breather box **(c)**.
- Position the clip **(a)** on hose correctly.

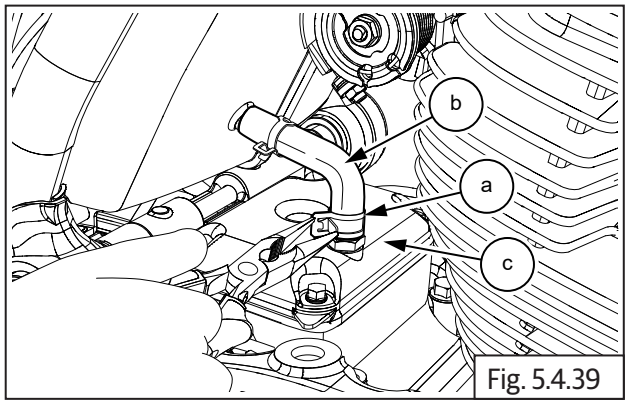

Fig. 5.4.39

	Nose plier

- Locate the other end of hose **(b)** on the tube in air filter box **(c)** and position the clip **(a)** over the breather hose correctly.

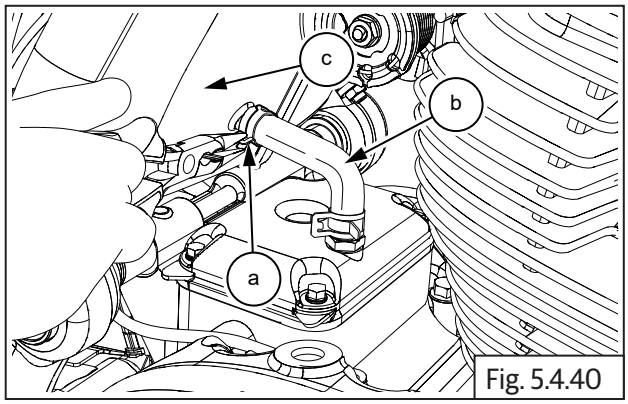

Fig. 5.4.40

	Nose plier

5.4.15. Spark Plug Suppressor Caps

Spark Plug Suppressor Caps on LH and RH Cylinder Heads

- Locate spark plug suppressor cap **(a)** on spark plug in LH cylinder head **(b)**.

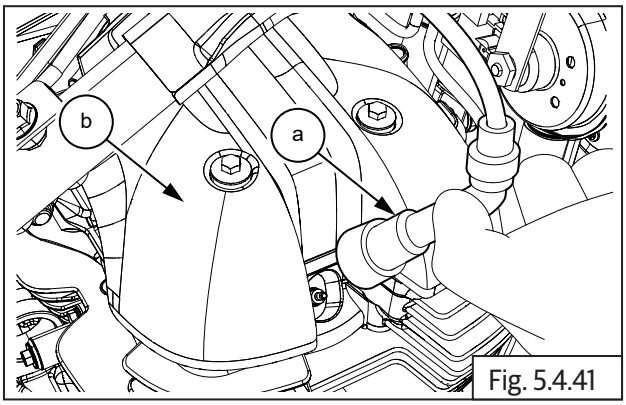

Fig. 5.4.41

- Locate spark plug suppressor cap **(a)** on spark plug in RH cylinder head **(b)**.

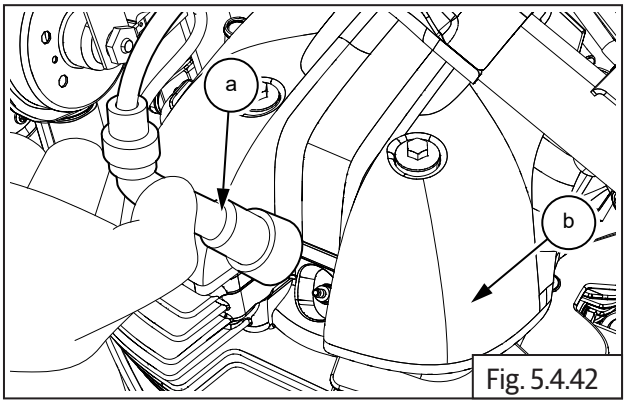

Fig. 5.4.42

5.4.16. Starter Motor Connections

- Connect starter motor negative (-) cable **(a)** to terminal.
- Assemble spring washer and 2 Nos. Hex flange head bolts **(M6) (b)** into terminal and tighten firmly.
- Slide protective cap over terminal on starter motor.

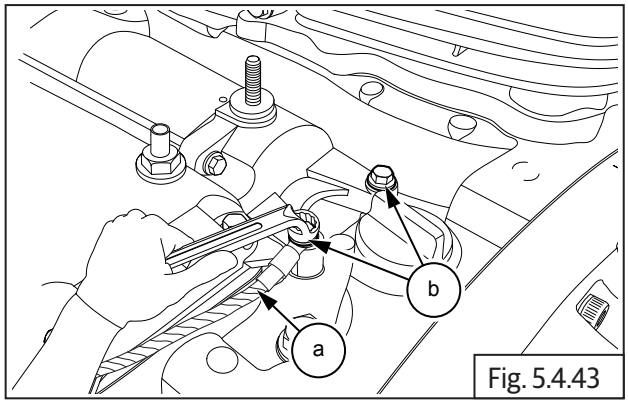

Fig. 5.4.43

	10 mm Socket with Ratchet
Torque	12 N-m/1.2 kgf-m

- Connect positive (+) cable **(a)** to starter motor terminal. Assemble Hex nut **(M6) (b)** and tighten firmly, duly ensuring the cable/terminal does not rotate.

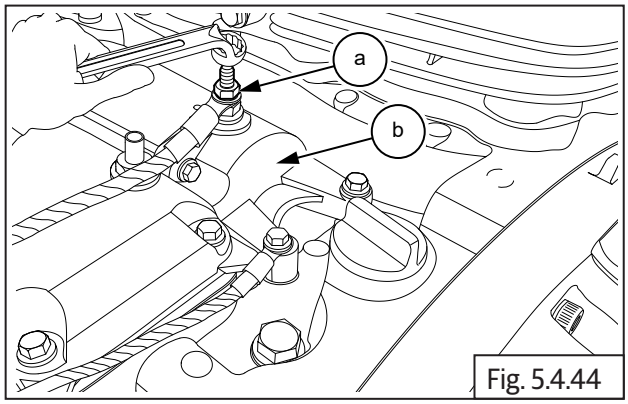

Fig. 5.4.44

	10 mm Double end spanner

5.4.17. Magneto/Side Stand Switch Connectors

- Connect magneto sensor connector **(a)** located on rear bottom of engine **(b)**.

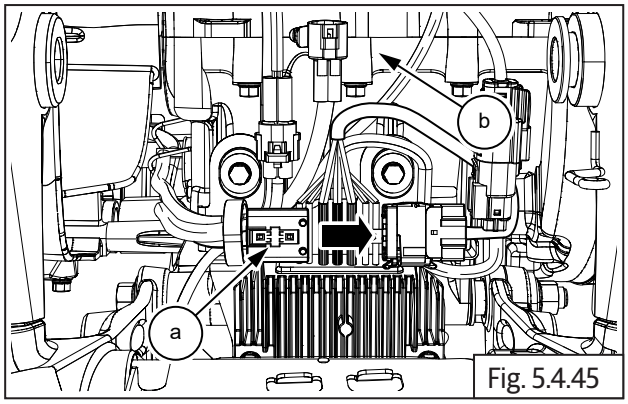

Fig. 5.4.45

- Connect side stand switch connector **(a)** located on rear top of engine **(b)**.

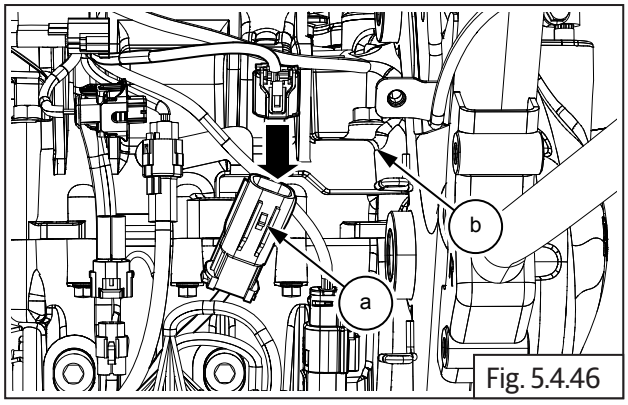

Fig. 5.4.46

5.4.18. Exhaust Pipe on Cylinder Head RH

- Locate new gaskets **(a)** into the LH and RH exhaust ports inside cylinder head. Ensure they are seated correctly.

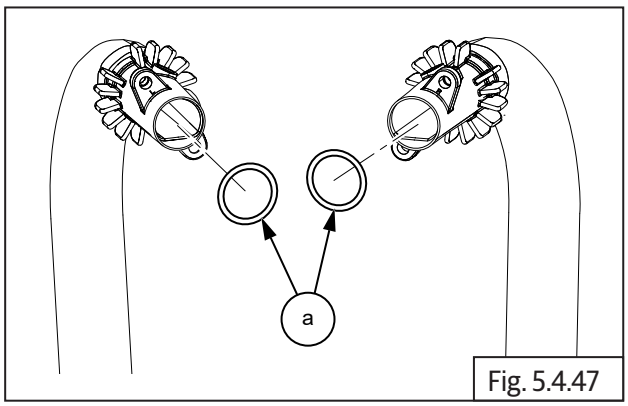

Fig. 5.4.47

- Locate exhaust pipe RH **(a)** into the exhaust manifold **(b)** on cylinder head RH, duly ensuring flange mounting holes are located correctly on the studs in cylinder head.

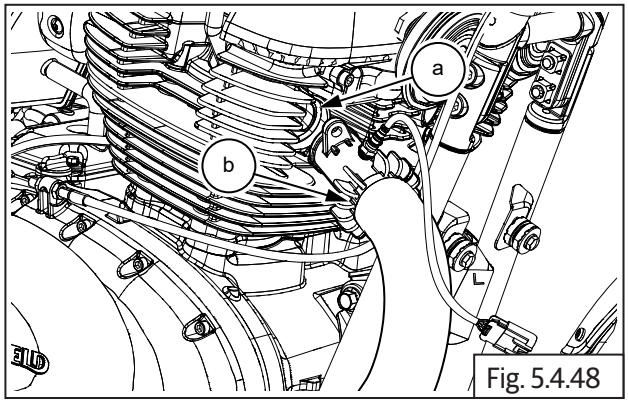

Fig. 5.4.48

- Ensure bracket on exhaust pipe bottom is aligned to mounting hole on frame on RH.
- Assemble 2 Nos. Hex nuts **(M8) (a)** on studs and tighten to specified torque.

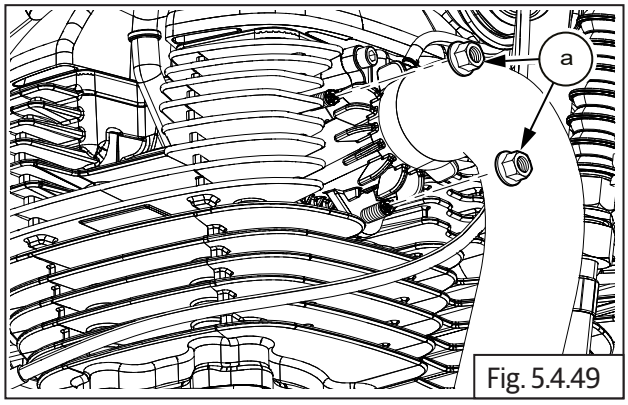

Fig. 5.4.49

	12 mm Socket with Ratchet
Torque	25 N-m/2.5 kgf-m

- Assemble Hex flange head bolt **(M8) (a)** along with washer cup and Hex nut **(M8) (b)** and tighten to specified torque.

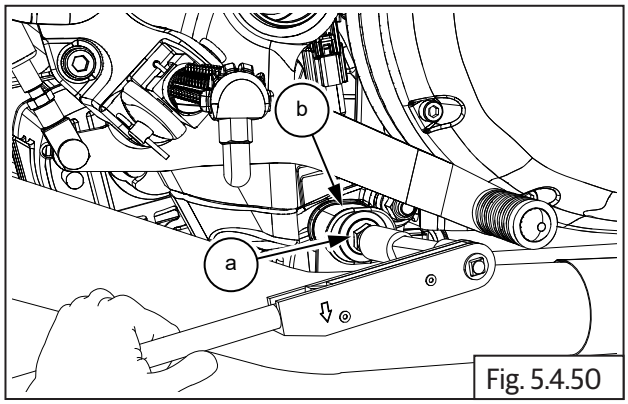

Fig. 5.4.50

	12 mm Socket with Ratchet
Torque	25 N-m/2.5 kgf-m

5.4.19. Exhaust Pipe on Cylinder Head LH

- Locate new gaskets **(a)** into the LH exhaust port inside cylinder head. Ensure they are seated correctly.

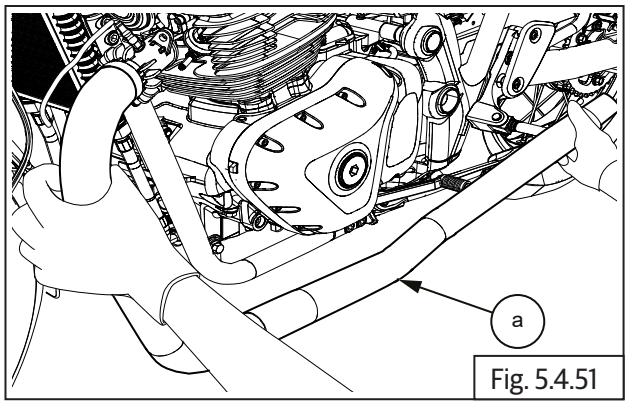

Fig. 5.4.51

- Assemble 2 Nos. Hex nuts **(M8) (a)** on the LH cylinder head top and bottom and tighten to specified torque.

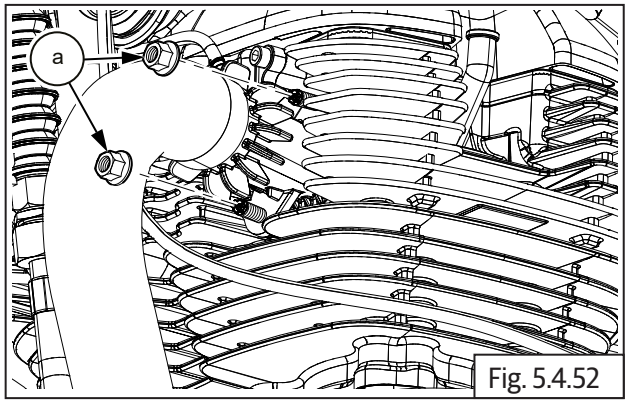

Fig. 5.4.52

	12 mm Socket with Ratchet
Torque	25 N-m/2.5 kgf-m

- Assemble Hex flange head bolt **(M8) (a)** along with washer cup and hex nut **(M8)** and tighten to specified torque.

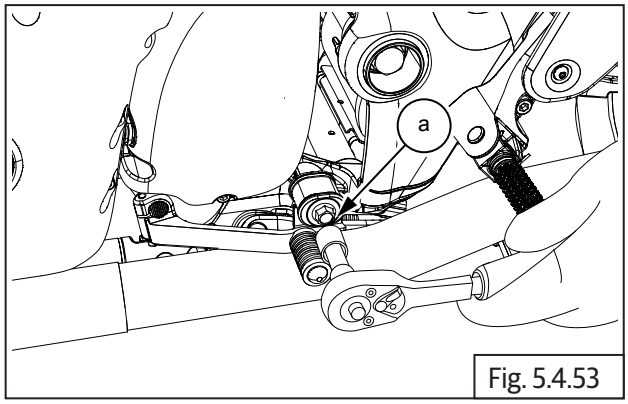

Fig. 5.4.53

	12 mm Socket with Ratchet
Torque	25 N-m/2.5 kgf-m

5.4.20. Silencer LH on Exhaust Pipe

- Ensure mounting clamp **(a)** on silencer **(b)** and is sufficiently loose.
- Assemble new gasket **(c)** on exhaust pipe and locate silence on exhaust pipe.
- Duly ensure rear mounting bracket of silencer is aligned to the mounting hole of frame LH.

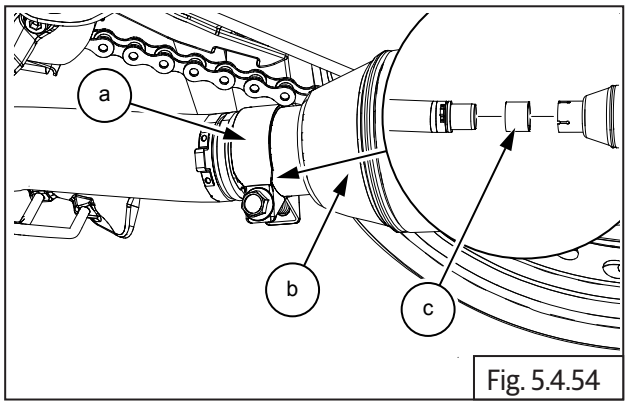

Fig. 5.4.54

	12 mm Ring spanner

- Align silencer mounting bracket hole to main frame mounting hole.
- Insert Hex head bolt **(M8) (a)** into mounting bracket **(b)** along with washer and nut **(c)**. Hold nut with suitable tool and tighten bolt to specified torque.

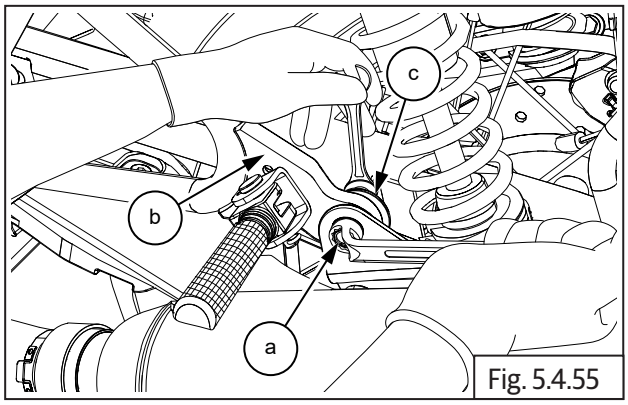

Fig. 5.4.55

	12 mm Ring spanner 12 mm Double end spanner

- Hold Hex head bolt **(M8) (a)** on clamp **(b)** and tighten nut **(c)**.

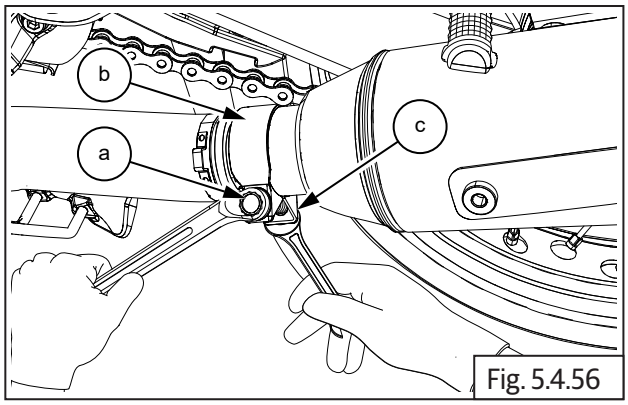

Fig. 5.4.56

5.4.21. Silencer RH on Exhaust Pipe

- Ensure mounting clamp **(a)** on silencer **(b)** and is sufficiently loose.
- Assemble new gasket **(c)** on exhaust pipe and locate silencer on exhaust pipe.
- Duly ensure rear mounting bracket of silencer is aligned to the mounting hole of frame RH.

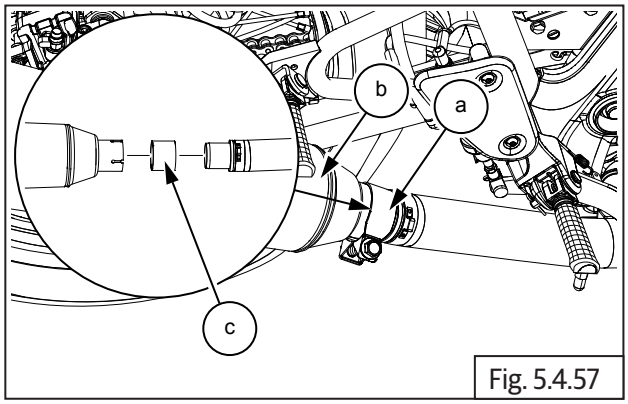

Fig. 5.4.57

- Align silencer mounting bracket hole to main frame mounting hole.
- Insert Hex head bolt **(M8) (a)** into mounting bracket **(b)** along with washer and nut **(c)**. Hold nut with suitable tool and tighten bolt to specified torque.

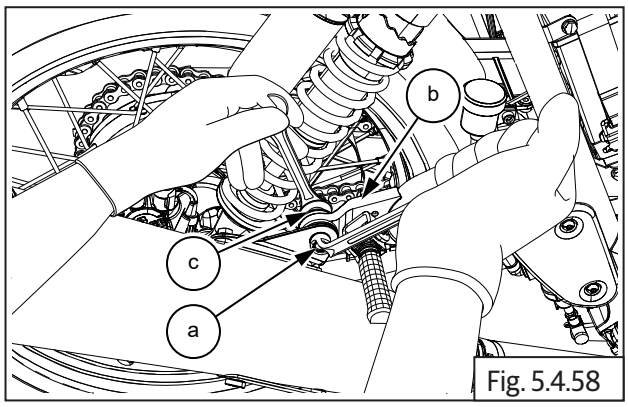

Fig. 5.4.58

	12 mm Ring spanner 12 mm Double end spanner

- Hold Hex head bolt **(M8) (a)** on clamp and ensure to position clamp on RH silencer **(b)** correctly and nut **(c)**.

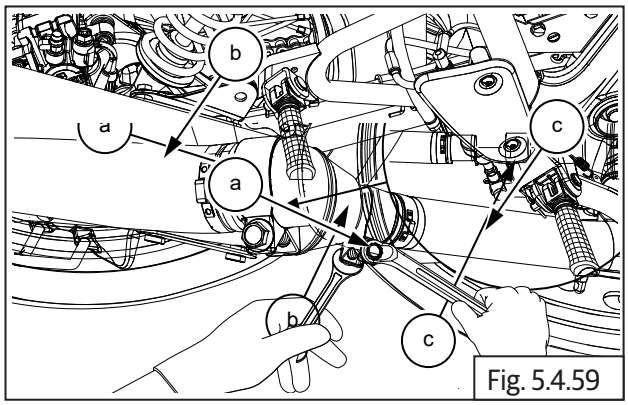

Fig. 5.4.59

	12 mm Ring spanner

5.4.22. Hego/Oxygen Sensor Connectors

- Ensure Hego/oxygen sensors are tightened fully on exhaust pipes LH and RH.
- Connect LH and RH Hego/Oxygen sensor connectors **(a)**.
- Ensure connectors are locked properly. (There is a "Click" sound when locked).

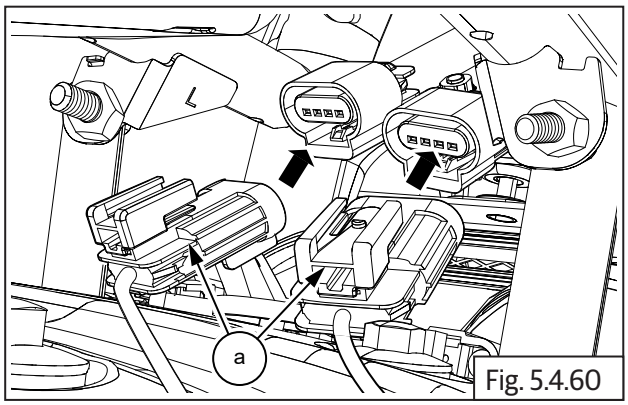

Fig. 5.4.60

5.4.23. Throttle Body

- Ensure clips **(a)** are in position on inlet manifolds and loosened sufficiently.
- Locate throttle body **(b)** on the inlet manifold rubber flanges **(c)** and ensure it is properly seated on both LH and RH inlet manifolds.

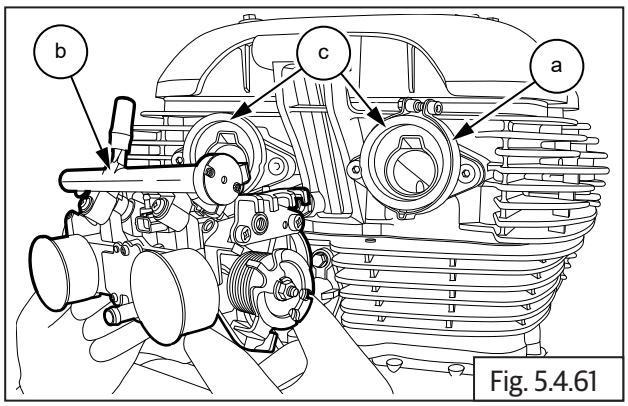

Fig. 5.4.61

- Tighten both clips **(a)** sufficiently over inlet manifold.
- Ensure clips are in position on air filter hoses and loosened sufficiently.

- Locate air filter housing **(b)** on throttle body **(c)** and ensure it is properly seated on both LH and RH of throttle body.

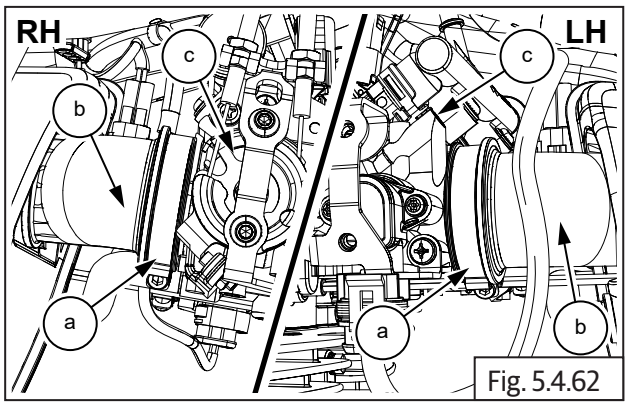

Fig. 5.4.62

- Tighten both clips **(a)** sufficiently over air filter hose.

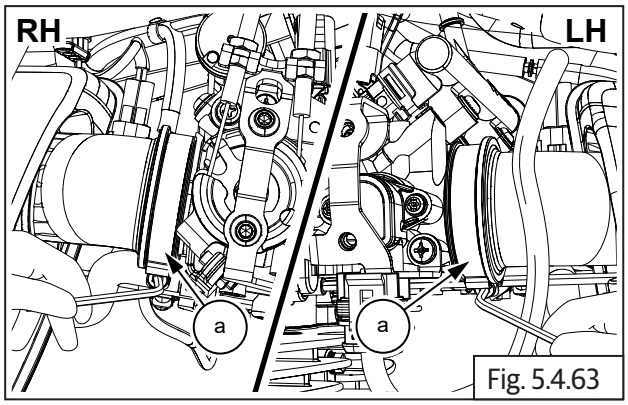

Fig. 5.4.63

5.4.24. Air Filter Housing to Throttle Body

- Tighten worm clips screws **(M4) (a)** from air filter housing **(b)** to throttle body **(c)** on both LH and RH sides.

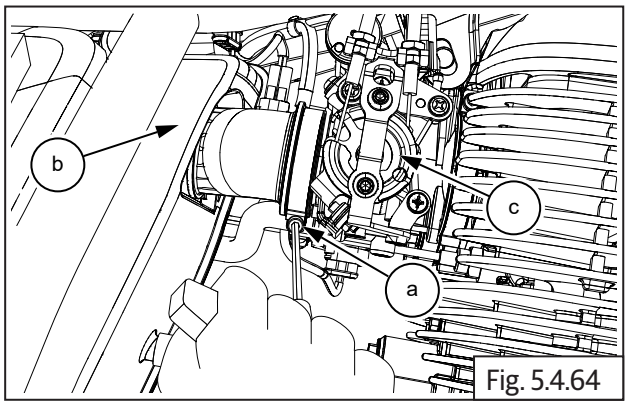

Fig. 5.4.64

	5 mm Allen key

5.4.25. Reed Valve Connection

- Connect the reed valve hose **(a)**.

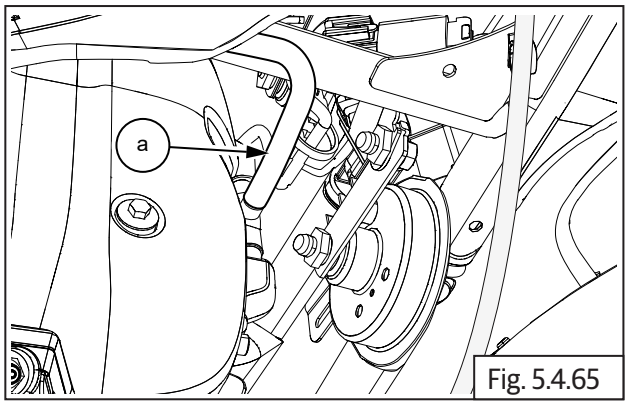

Fig. 5.4.65

5.4.26. Injector, TPS and Map Connections

- Connect the LH and RH injector connectors **(a)** located on throttle body **(b)**.

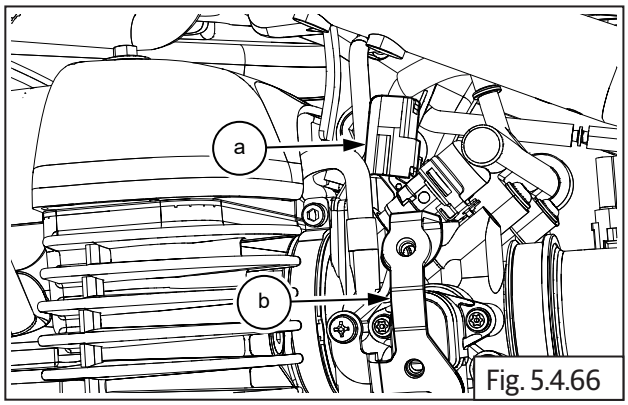

Fig. 5.4.66

- Connect TPS sensor connector **(a)** to sensor **(b)** at bottom of throttle body.

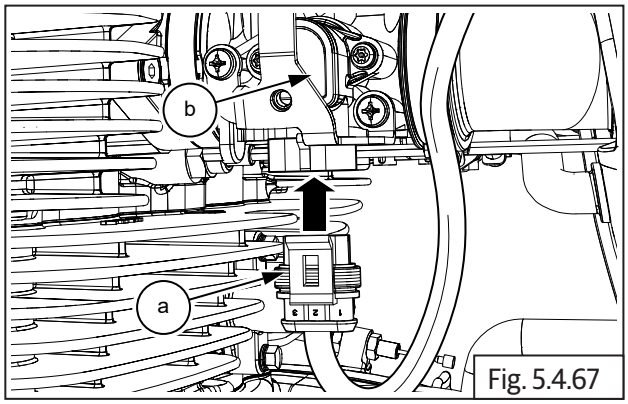

Fig. 5.4.67

- Connect idle speed sensor connector **(a)**.

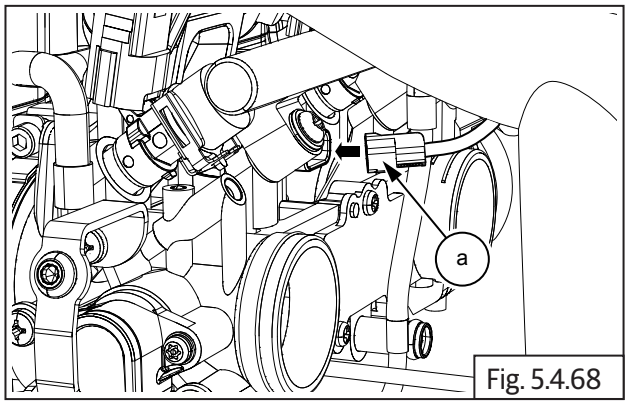

Fig. 5.4.68

- Connect idle EVAP hoses **(a)** into throttle body.

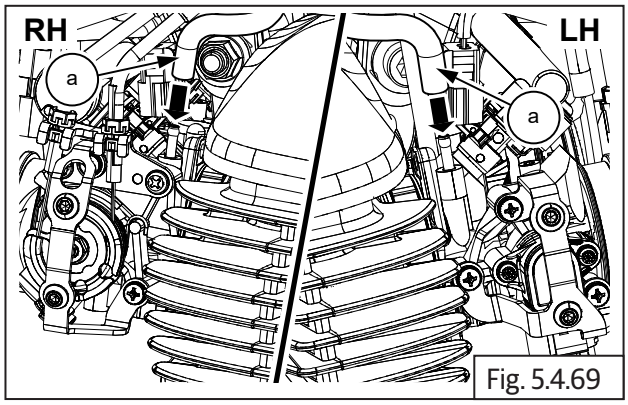

Fig. 5.4.69

5.4.27. Throttle Cables

- Loosen bottom adjuster nuts **(a)** fully from adjusters in inner and outer throttle cables.
- Ensure top adjuster **(b)** nuts are fully threaded into adjusters.
- Slide inner cables **(c)** into slots in throttle bracket and push adjusters completely into throttle bracket till outer lock nuts are resting against bracket.

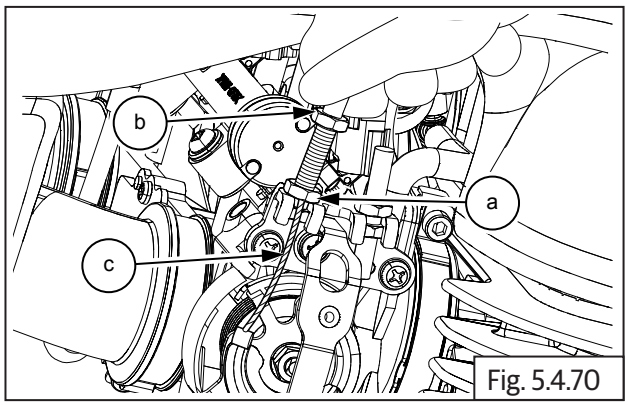

Fig. 5.4.70

- Route throttle cable inner in throttle rotor and position throttle cable end **(a)** in eyelet in throttle rotor **(b)** correctly.

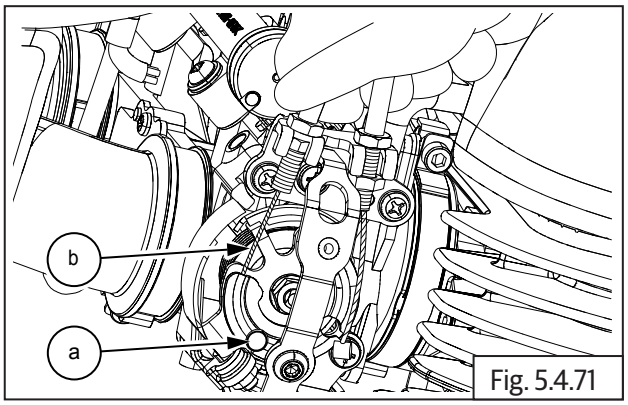

Fig. 5.4.71

- Assemble outer lock nut **(a)** on adjuster in throttle body **(b)**.
- Adjust throttle cable free play as specified and tighten 2 Nos. lock nuts on throttle cable adjuster against bracket.
- Repeat same procedure for return cable.

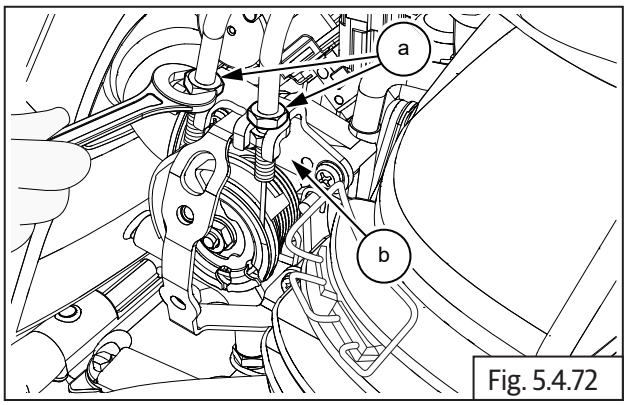

Fig. 5.4.72

	12 mm Double end spanner

5.4.28. Throttle Body Covers on LH and RH

- Locate throttle body covers on both LH and RH of throttle body.
- Insert and tighten 2 Nos. Hex socket head bolts **(M5) (a)** into RH throttle body cover **(b)**.

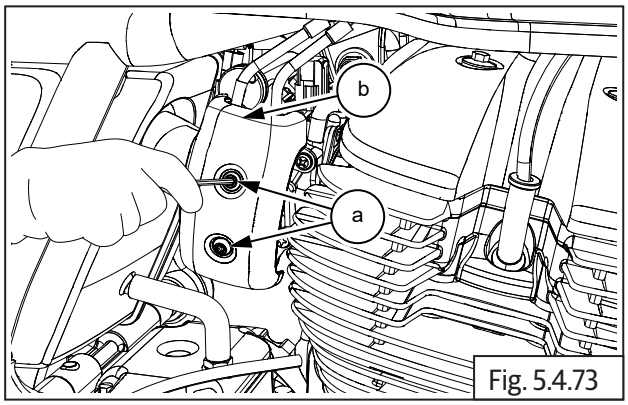

Fig. 5.4.73

	4 mm Allen key

5.4.29. Fuel Tank

- Locate and slide the fuel tank into front frame guides **(a)**.

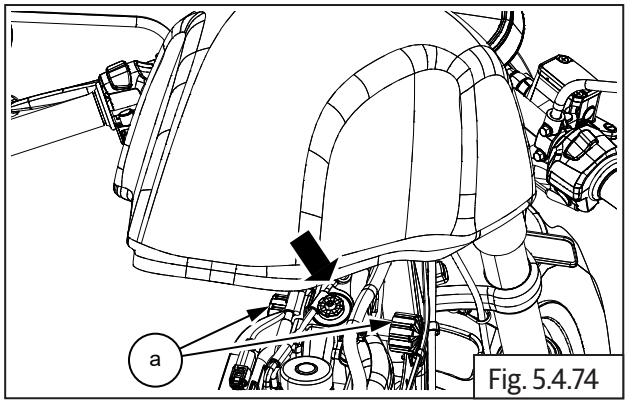

Fig. 5.4.74

5.4.30. EVAP to Fuel Tank Connections

- Connect drain connection hose **(a)** to fuel tank **(b)**.

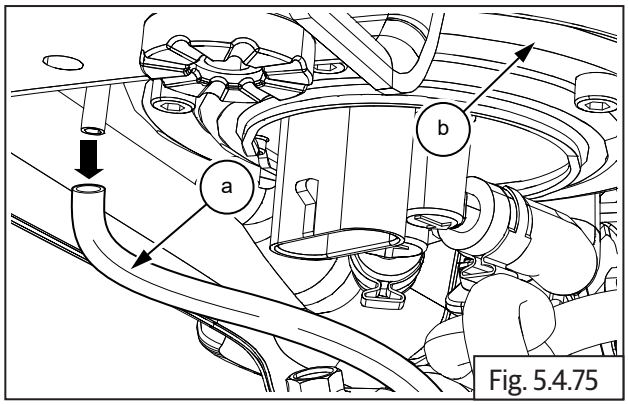

Fig. 5.4.75

- Connect the EVAP connection hose **(a)** to the fuel tank **(b)**.

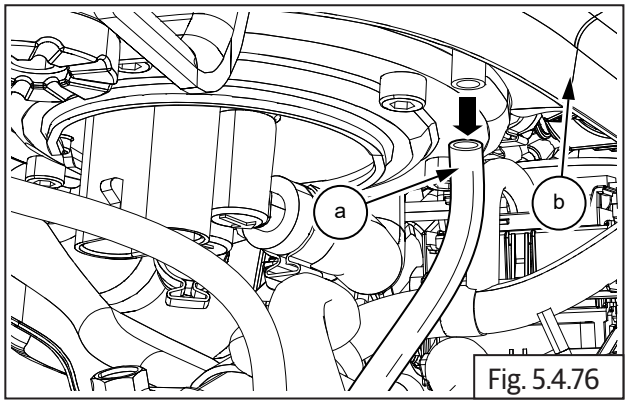

Fig. 5.4.76

5.4.31. Fuel Hose (Fuel Pump to Injector)

- Connect fuel feed hose quick connector **(a)** (fuel pump to injector rail).

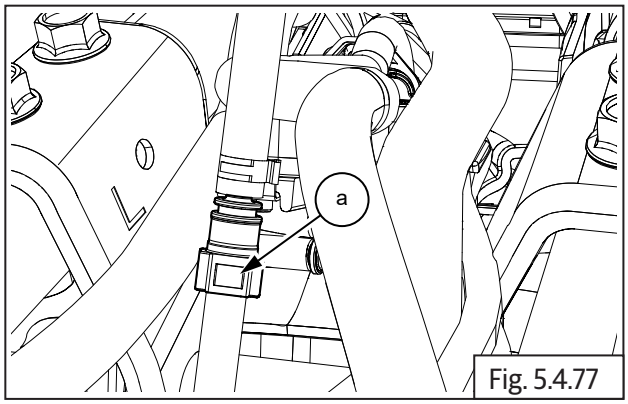

Fig. 5.4.77

NOTE
• *Ensure fuel quick coupler is locked properly. (There should be a "Click" sound when locked)*

5.4.32. Fuel Level Sensor and Fuel Pump

Fuel Level Sensor and Fuel Pump Connectors

- Connect fuel level sensor connectors **(a)** in fuel tank **(b)**.

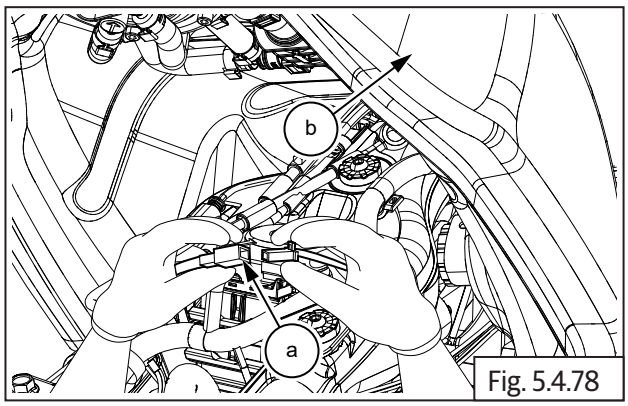

Fig. 5.4.78

- Connect the fuel pump connector **(a)** into the fuel tank **(b)**.

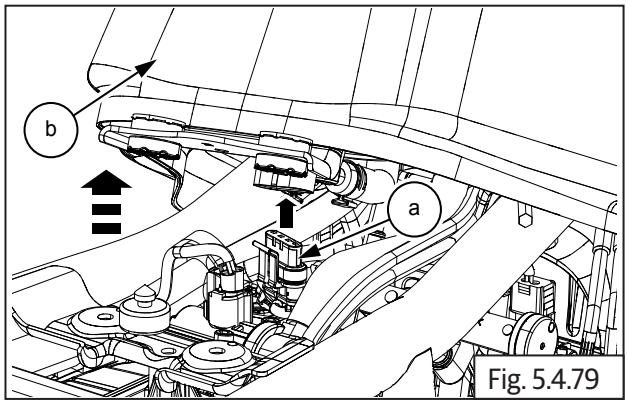

Fig. 5.4.79

- Tighten with 2 Nos. Hex head bolts **(M6) (a)** into fuel tank **(b)** on frame.

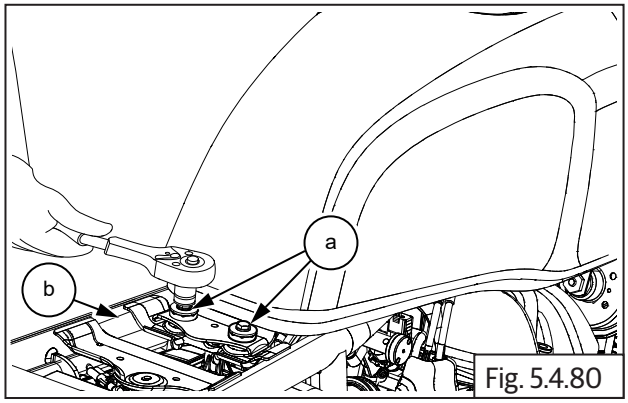

Fig. 5.4.80

	10 mm Socket with Ratchet
Torque	10 N-m/1 kgf-m

5.4.33. Clutch Cable

NOTE
• *Ensure clutch cable is properly routed and retained by all necessary clips.*

- Locate lower end of clutch cable **(a)** into guide **(b)**.

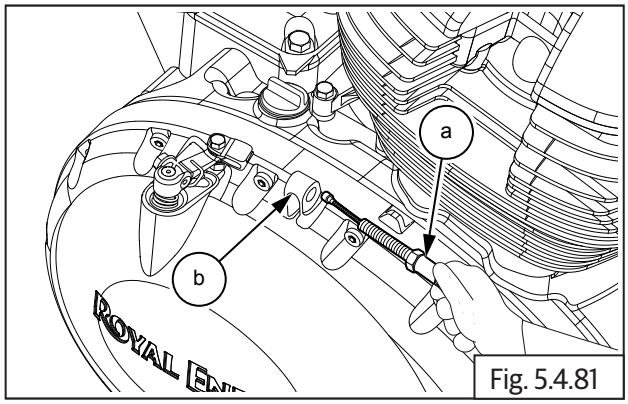

Fig. 5.4.81

- Install outer lock Hex nut **(M8) (a)**.

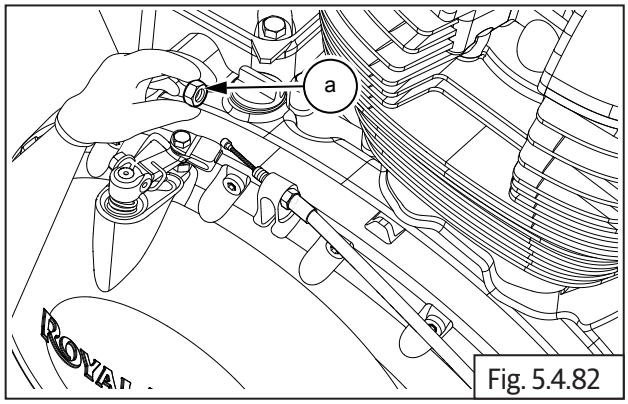

Fig. 5.4.82

- Install rubber grommet **(a)**.

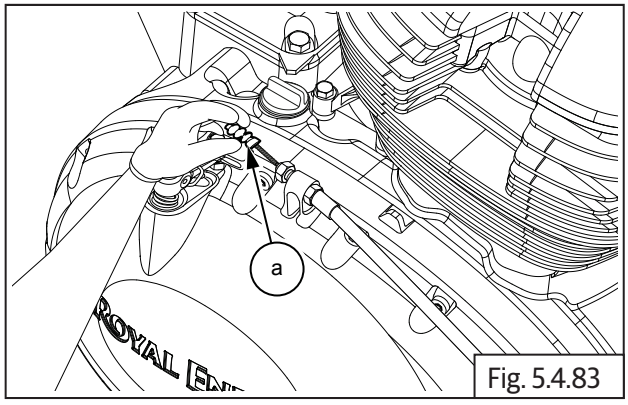

Fig. 5.4.83

- Install inner cable **(a)** into clevis in the clutch release case **(b)**.

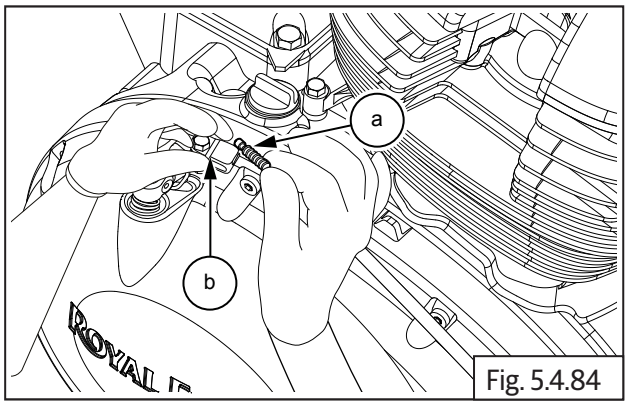

Fig. 5.4.84

- Tighten inner lock Hex nut **(M8) (a)** to specified clutch lever free play of 2 to 3 mm.

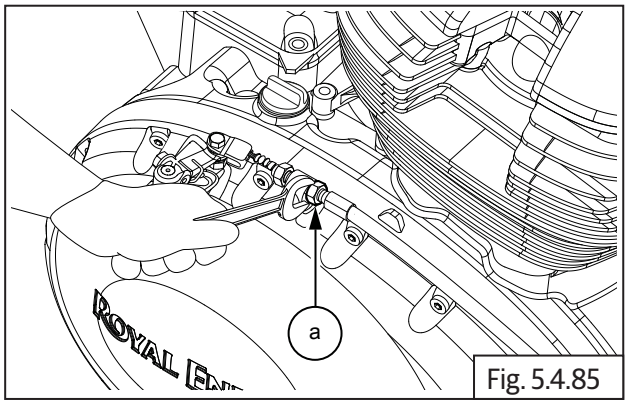

Fig. 5.4.85

	12 mm Double end spanner

- Tighten outer lock nut **(M8) (a)**.

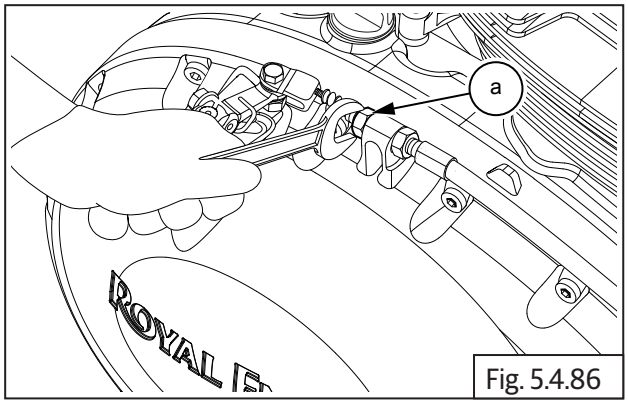

Fig. 5.4.86

	12 mm Double end spanner

5.4.34. Battery Connections

NOTE
• *Ensure ignition and stop switches are in OFF position before connecting battery cables.*

- For the precautions and procedures to remove and install cables refer General Information (section 1.5.8).
- Connect positive (+) terminal and tighten with Hex head bolt **(M6) (a)** on battery **(b)**.

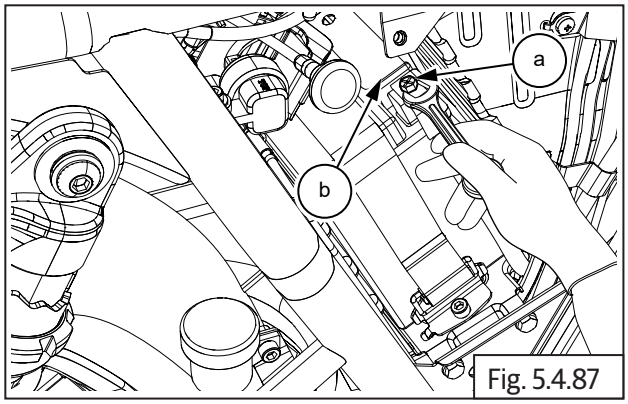

Fig. 5.4.87

	10 mm Double end spanner

- Connect negative (-) terminal and tighten with Hex head bolt **(M6) (a)** on battery **(b)**.

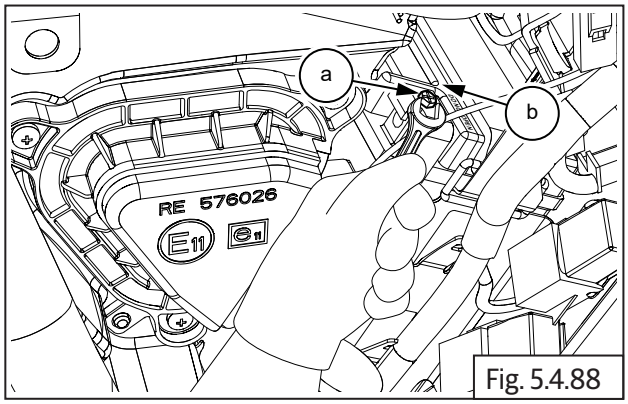

Fig. 5.4.88

	10 mm Double end spanner

5.4.35. Seat Assembly

- Locate seat **(a)** into seat bracket properly and gently push to lock.

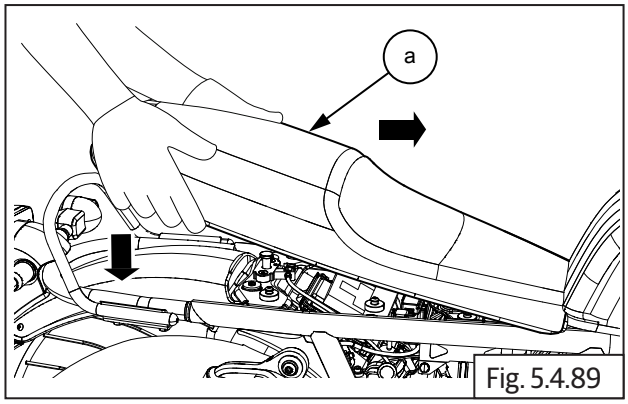

Fig. 5.4.89

5.4.36. Side Panel LH and RH

- Slide LH panel **(a)** from bottom to fit into frame **(b)**.

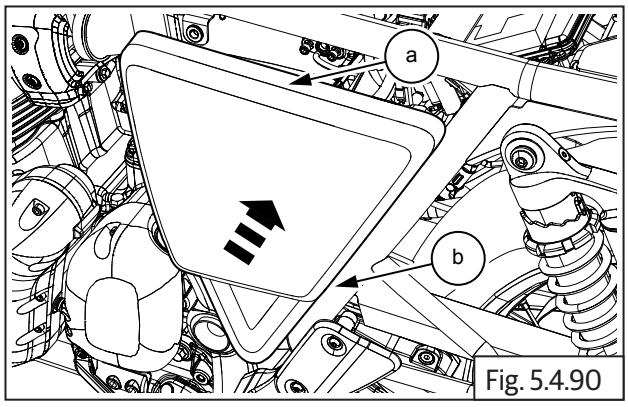

Fig. 5.4.90

- Insert and tighten Phillips head screw **(a)** located near ECU **(b)** to fix LH side panel.

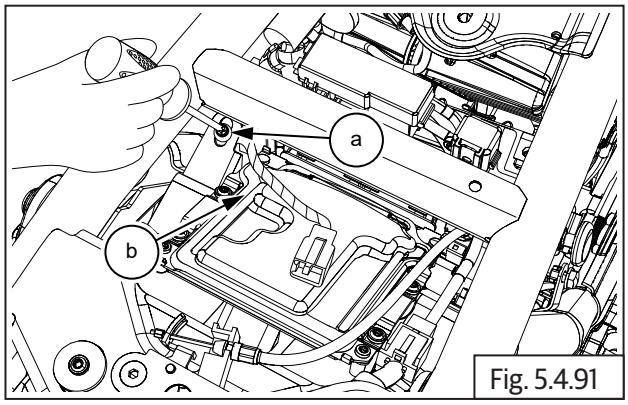

Fig. 5.4.91

	Phillips screw driver

5.4.37. Oil Filter

- Locate and tighten oil filter **(a)** using special tool **(b)**.

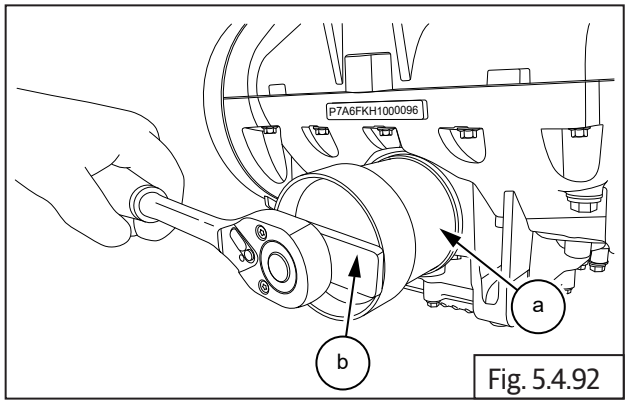

Fig. 5.4.92

SPL 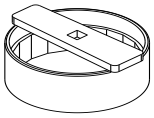	Part No: ST30294/a
	Part Name: Oil filter wrench with Ratchet
Torque	20 N-m/2 kgf-m

5.4.38. Oil Cooler Mountings to Frame

- Slide up cooler to top mounting bush and support cooler on frame **(a)**.
- Tighten 2 Nos. Hex flange head bolts **(M6) (b)** along with washers and nuts from cooler mounting to frame.

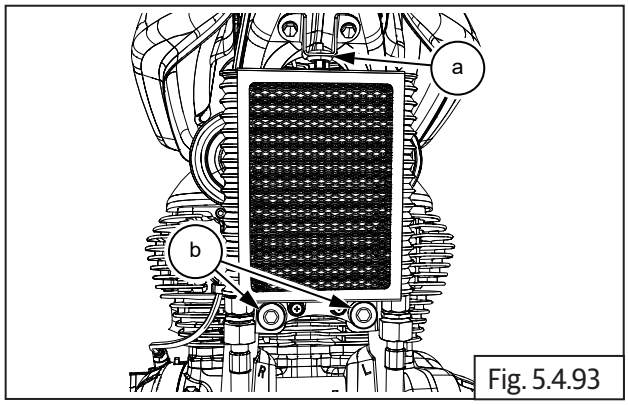

Fig. 5.4.93

	10 mm Socket with Ratchet

5.4.39. Oil Cooler Inlet and Outlet Pipes

Oil Cooler Inlet and Outlet Pipes to Engine

- Insert bolt union crankcase **(M16) (a)** along with washers and tighten to specified torque.

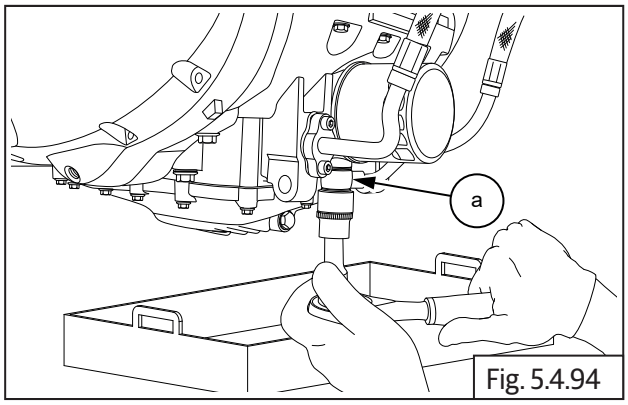

Fig. 5.4.94

	24 mm Socket with Ratchet
Torque	45 N-m/4.5 kgf-m

- Tighten bolt **(M18) (a)** on oil cooler hose **(b)** by supporting **(M16) (c)** bolt on top.

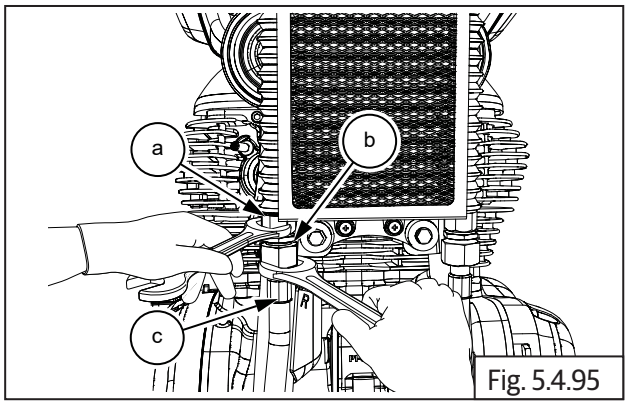

Fig. 5.4.95

	24 mm and 27 mm Double end spanner

- Tighten oil cooler inlet pipe with 2 Nos. Hex socket screws **(M6) (a)**.

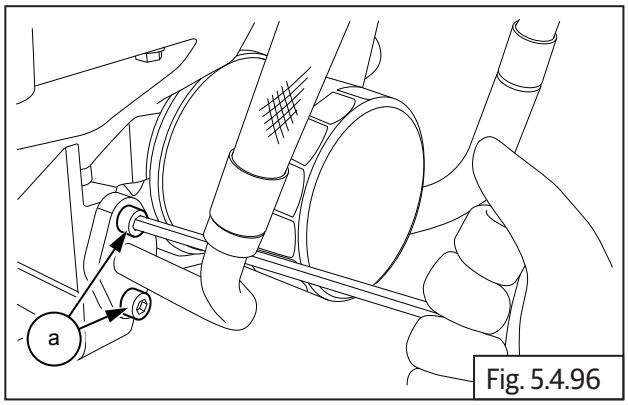

Fig. 5.4.96

	5 mm Allen socket with Ratchet and Torque wrench
Torque	12 N-m/1.2 kgf-m

5.4.40. Drain Bolt and Engine Oil Re-fill

- Place a container **(a)** under engine oil drain bolt **(M14) (b)**.
- Insert and tighten drain bolt **(M14) (b)** along with washer **(c)**.

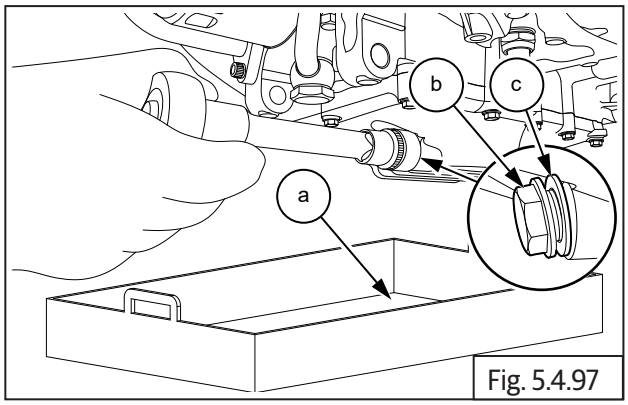

Fig. 5.4.97

Dry Fill	3.9 Liters / 1.03 Imperial gallon
Grade	TOTAL ELF MOTO 4 TECH SAE 10W50 APISL, JASO MA2, SYNTHETIC

	19 mm Socket with Ratchet
Torque	35 N-m/3.5 kgf-m

- Refill engine oil with recommended quantity.
- Assemble engine oil filler cap **(a)**.

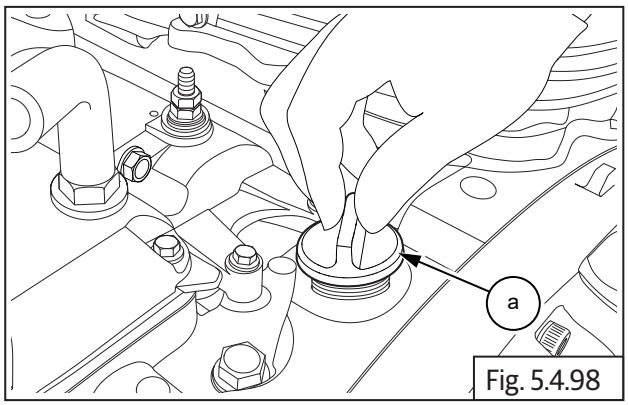

Fig. 5.4.98

- Start and warm up engine for 2 to 3 minutes and then turn it off.
- Check oil level through oil level window.

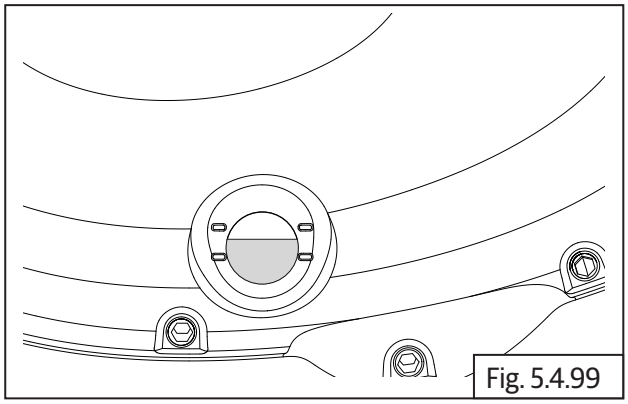
Fig. 5.4.99

ENGINE DISMANTLING

CONTENTS PAGE

5.5 Engine Dismantling 200

5.5.1. Drain Plug 200

5.5.2. Oil Filter 201

5.5.3. Inlet Manifold Rubber Flange 201

5.5.4. Starter Motor 201

5.5.5. Breather Hose 202

5.5.6. Breather Box Cover 202

5.5.7. Spark Plugs 202

5.5.8. Clutch Actuating Lever Assembly 203

5.5.9. Clutch Cover 203

5.5.10. Clutch Actuating Shaft 204

5.5.11. Oil Level Window 205

5.5.12. Clutch Plates 205

5.5.13. Oil Pump 207

5.5.14. Gear Shifter Shaft 208

5.5.15. Star Index Stopper 210

5.5.16. Star Index 210

5.5.17. Reed Valves 210

5.5.18. Cylinder Head Cover 211

5.5.19. Crankshaft Plug on Magneto Cover 211

5.5.20. Rocker Carrier LH Cylinder 212

5.5.21. Rocker Carrier RH Cylinder 212

5.5.22. Rocker Arms from Rocker Carriers LH & RH 213

5.5.23. Timing Chain Tensioner 213

5.5.24. Cam Shaft, Sprocket & Chain 214

CONTENTS PAGE

5.5.25. Magneto Cover 215
5.5.26. Stator Assembly with CPS 216
5.5.27. Magneto Rotor Bolt 217
5.5.28. Starter Clutch from Magneto Rotor 218
5.5.29. Gear Position Sensor 219
5.5.30. FD Sprocket 219
5.5.31. Cylinder Head 220
5.5.32. Components from Cylinder Head 221
5.5.33. Floating Chain Pad 222
5.5.34. Cylinder Barrel 222
5.5.35. Pistons 222
5.5.36. Oil Pressure Switch 222
5.5.37. Oil Pan 223
5.5.38. Oil Strainer 223
5.5.39. Oil Bypass 223
5.5.40. Crankcase Fasteners 224
5.5.41. Splitting Crankcase 227
5.5.42. Balancer Shaft 227
5.5.43. Timing Chain Tensioner Pad 227
5.5.44. Connecting Rod 227
5.5.45. Crankshaft Assembly 228
5.5.46. Countershaft 228
5.5.47. Driveshaft 230
5.5.48. Selector Fork and Spindles 234
5.5.49. Gear Shift Cam Drum 234

5.5 Engine Dismantling

NOTE
• *Ensure the engine is properly clamped on the holding fixture on a worktable.* • *Ensure the engine is clean and free of any oil residue/dirt. Clean engine with recommended degreasing agents/solvents to remove oil residue/dirt.* • *Ensure worktable is clean and atmosphere is dust free.*

5.5.1. Drain Plug

- Loosen and remove oil filler cap **(a)** from the crankcase top on the RH side.
- Use an adjustable plier with soft jaws to unscrew filler cap if necessary.

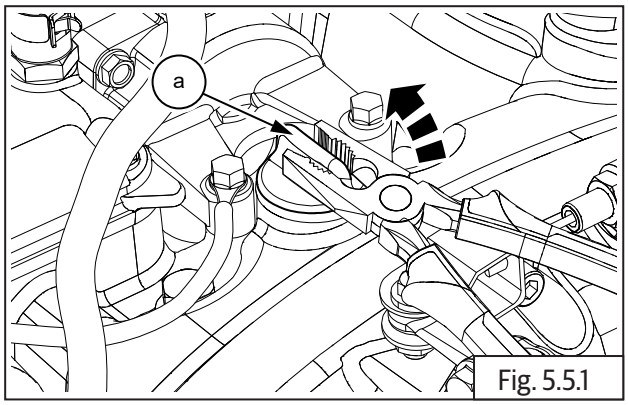

Fig. 5.5.1

	Adjustable plier with soft jaws

- Place a tray under the engine, loosen and remove magnetic drain plug **(M14) (a)** along with washer **(b)** from the front end of the oil sump.
- Allow the engine oil to drain out completely from the engine.

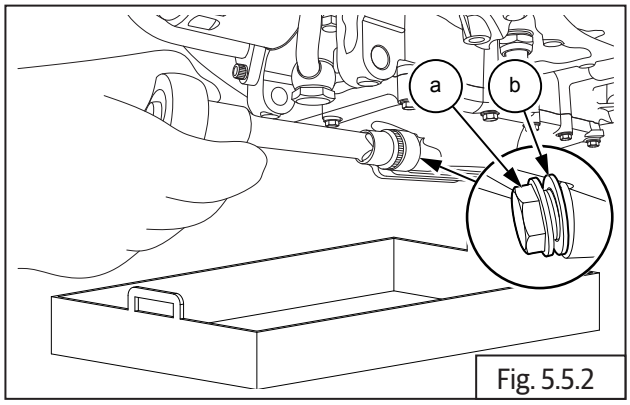

Fig. 5.5.2

	19 mm Socket with Ratchet

⚠ WARNING
Do not spill oil . Collect used oil in a seperate container and dispose it through authorized disposal agencies in your locality. Avoid skin OR body contact with the oil. Promptly wash affected area with soap and water.

NOTE
• *Ensure the engine oil is drained completely.* • *After draining the oil suitably cover the oil filler cap hole to prevent debris AND/OR small components falling into the crankcase.*

5.5.2. Oil Filter

- Place a tray under the engine oil filter.
- Loosen and remove oil filter **(a)** located on front bottom of engine **(b)** using special tool.

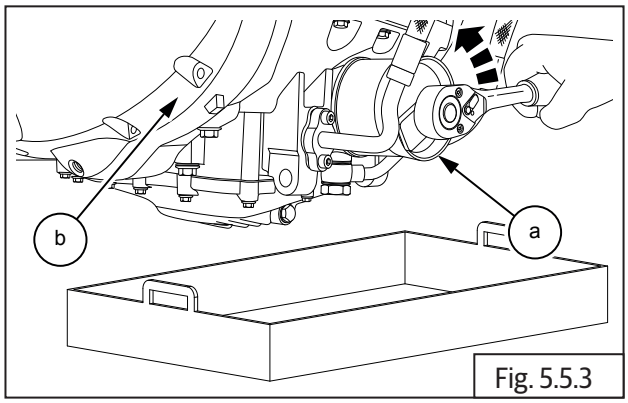

Fig. 5.5.3

SPL 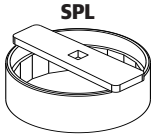	Part No: ST30294/a
	Part Name: Oil filter wrench with Ratchet

5.5.3. Inlet Manifold Rubber Flange

- Loosen and remove 4 Nos. Hex socket head bolts **(M5) (a)** located on inlet manifold of engine.

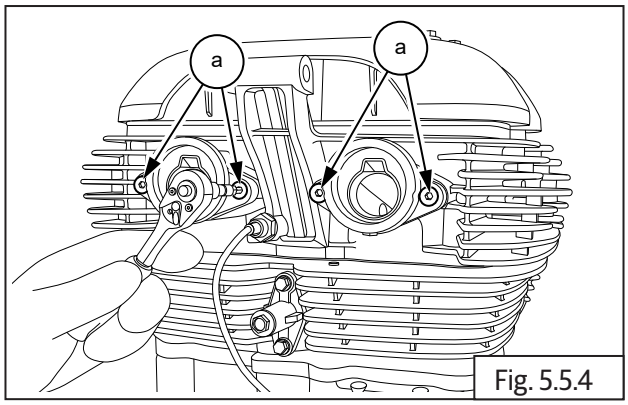

Fig. 5.5.4

	4 mm Allen socket with Ratchet

- Remove 2 Nos. inlet manifold rubber flange **(a)** from engine.

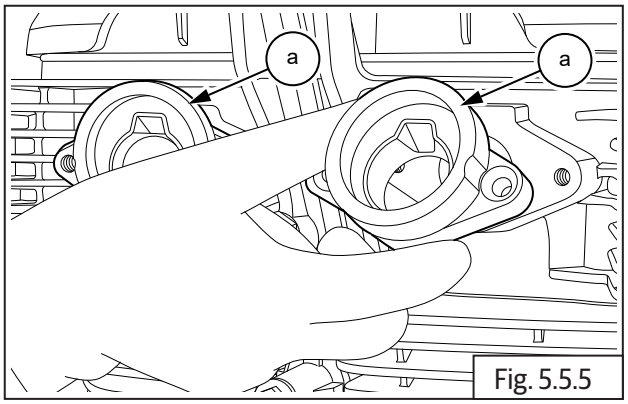

Fig. 5.5.5

5.5.4. Starter Motor

- Loosen and remove 2 Nos. Hex flange head mounting bolts **(M5) (a)** holding starter motor **(b)** to crankcase **(c)**.

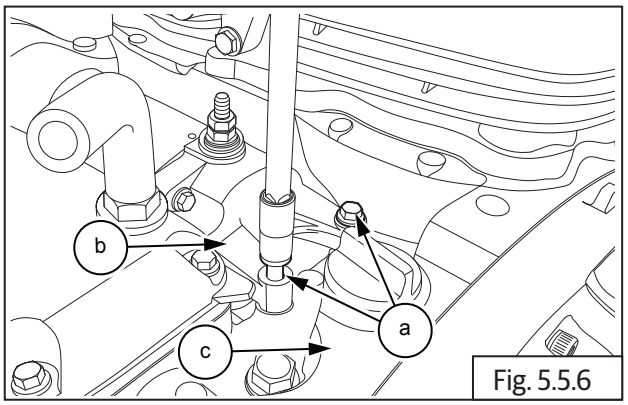

Fig. 5.5.6

	8 mm Socket with Ratchet

- Gently pull out and lift starter motor **(a)** from engine.

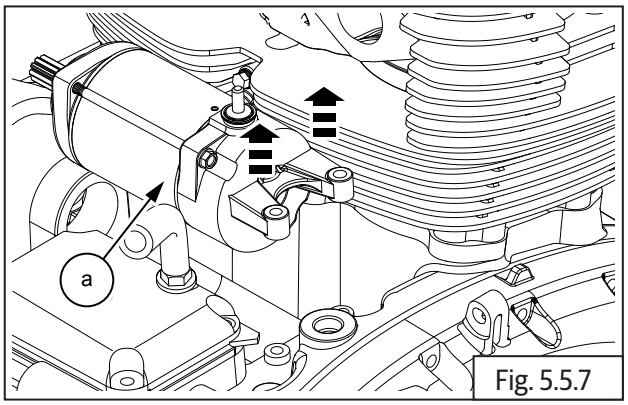

Fig. 5.5.7

NOTE
• **Do not** *tap on the starter motor while removing it. Tapping may damage the internal components.*

5.5.5. Breather Hose

- Release the clamp **(a)** to disconnect breather hose **(b)** from breather box **(c)**.

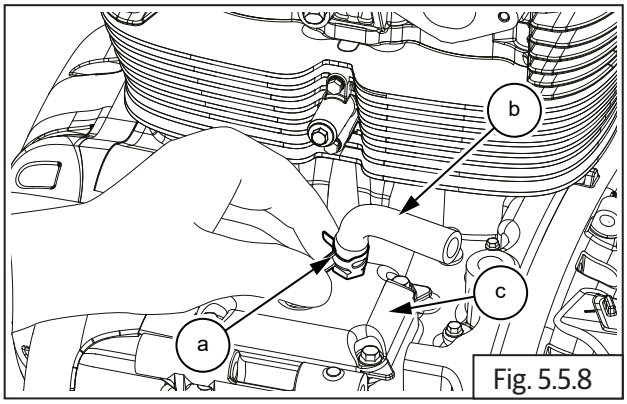

Fig. 5.5.8

	Nose plier

5.5.6. Breather Box Cover

- Loosen and remove the 5 Nos. Hex head flange bolts **(M6) (a)**.

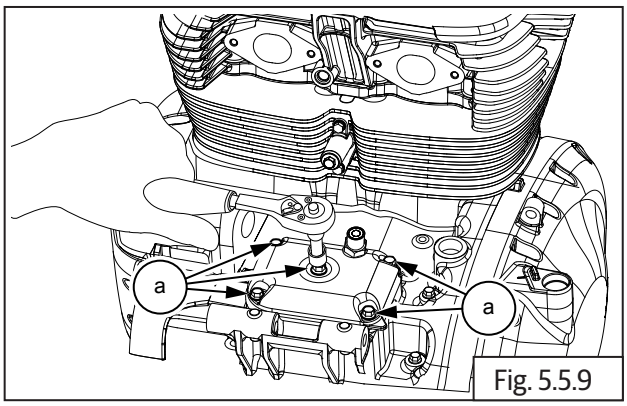

Fig. 5.5.9

	10 mm Socket with Ratchet

- Gently remove the breather box cover **(a)** along with gasket **(b)**.

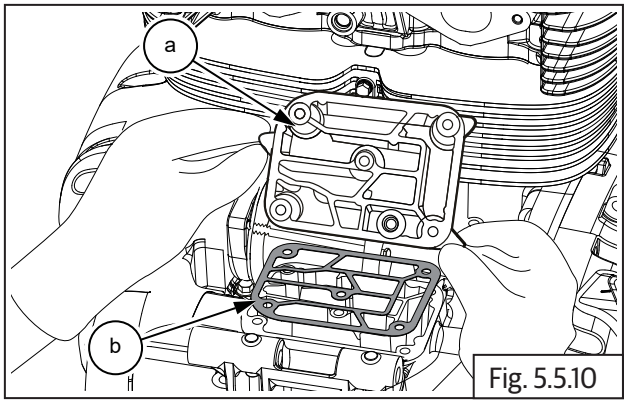

Fig. 5.5.10

5.5.7. Spark Plugs

⚠ CAUTION

Before removing the spark plugs, blow away any dirt accumulated in the spark plug area with compressed air to prevent it from falling into cylinder head.

- Loosen and remove RH spark plug **(a)** from RH cylinder head.

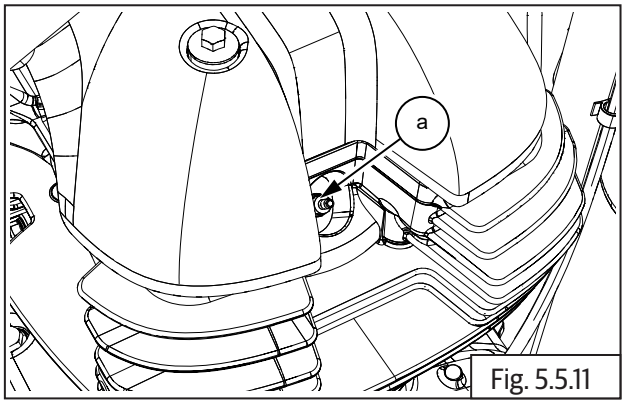

Fig. 5.5.11

	16 mm Socket with Ratchet

- Repeat the procedure to remove LH spark plug.

5.5.8. Clutch Actuating Lever Assembly

- Loosen and remove Hex head bolt **(M6) (a)** from clutch actuating lever assembly **(b)**.

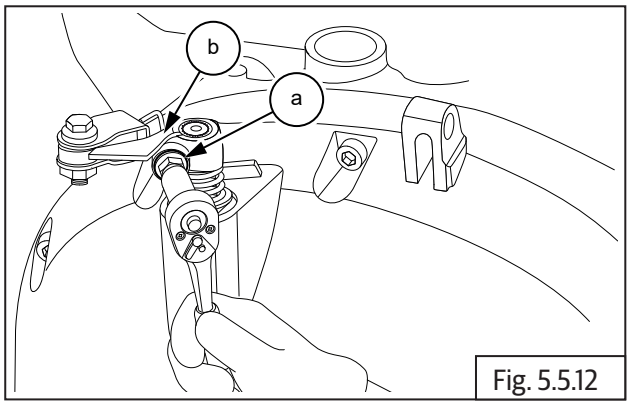

Fig. 5.5.12

	10 mm Socket with Ratchet

- Rotate clutch actuating lever **(a)** in clockwise direction to release tension in spring **(b)**.

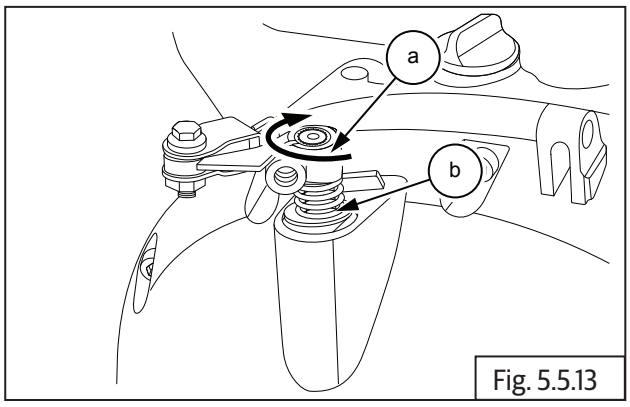

Fig. 5.5.13

- Remove clutch actuating lever **(a)** from clutch shaft **(b)** on cover.

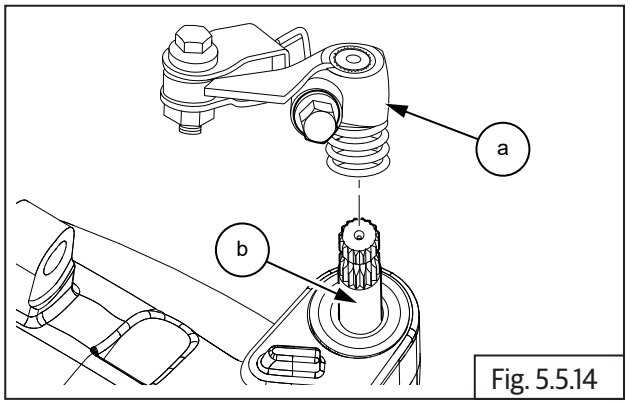

Fig. 5.5.14

	Wedge

NOTE
• *Use a suitable wedge to slightly expand the slot in the clutch actuating arm and gently lift from the shaft.*

5.5.9. Clutch Cover

- Loosen and remove 14 Nos. Hex socket head screws **(M6) (a)** in a crisscross to remove clutch cover **(b)** from motorcycle RH.

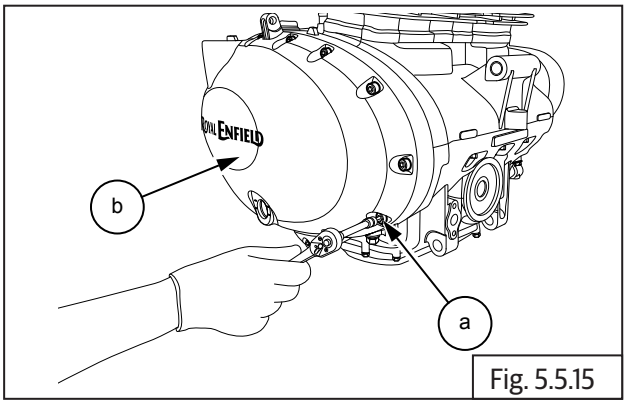

Fig. 5.5.15

	5 mm Allen socket with Ratchet

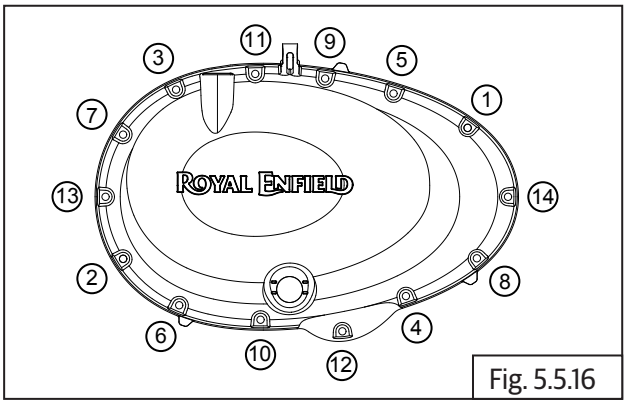

Fig. 5.5.16

- If the cover is jammed in the engine, gently tap on the tabs **(a)** provided on the cover using a plastic/ rubber mallet.

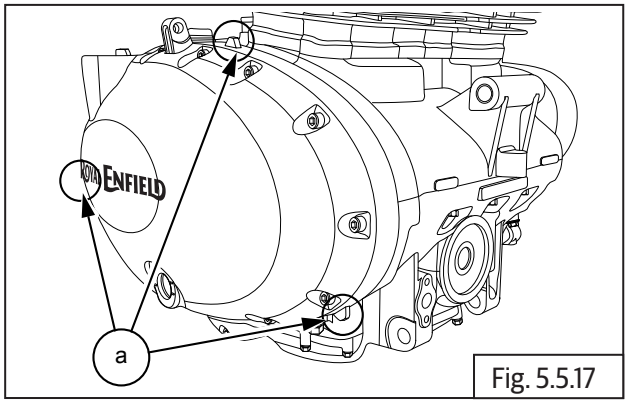

Fig. 5.5.17

	Plastic/Rubber mallet

- Remove gasket **(a)** and 2 Nos. dowel pins **(b)** from clutch cover/engine.

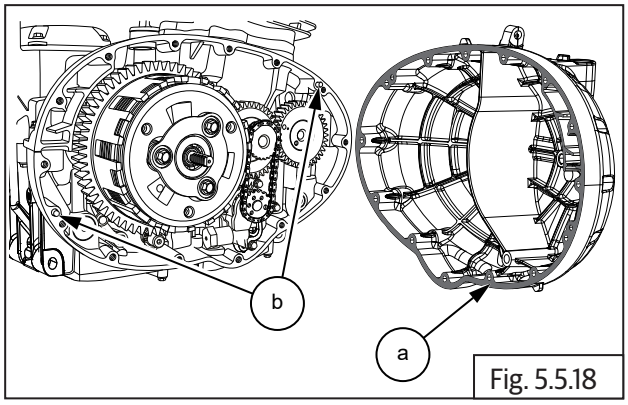

Fig. 5.5.18

⚠ CAUTION

Do not use a sharp tool to scrap the gasket material from the joint faces.

If required scrap only with a soft and blunt tool.

5.5.10. Clutch Actuating Shaft

- Gently remove the E clip **(a)** and washer **(b)** from the bottom of the clutch actuating shaft inside clutch cover.

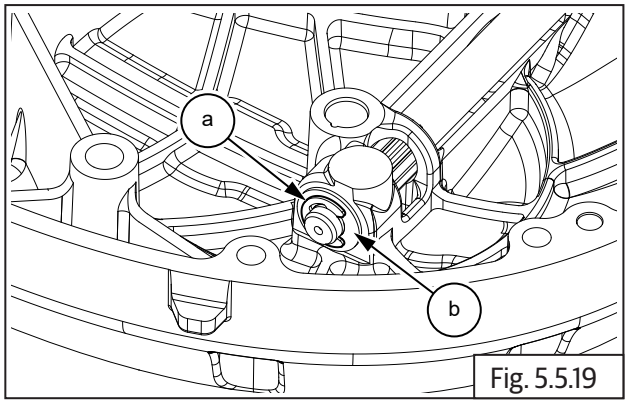

Fig. 5.5.19

	Nose plier

- Remove oil seal **(a)** along with washer **(b)** from outer clutch case.

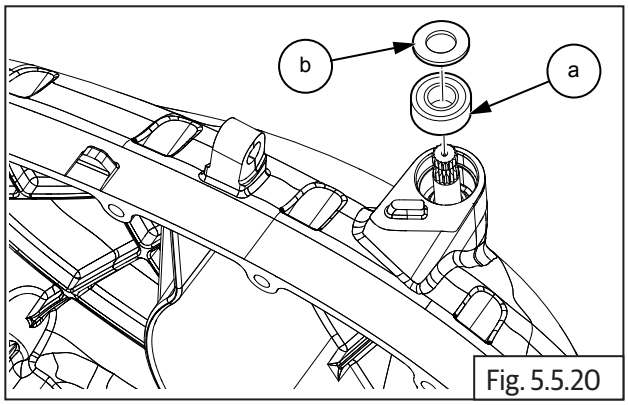

Fig. 5.5.20

- Gently pull out clutch actuating shaft **(a)** from clutch cover **(b)**.

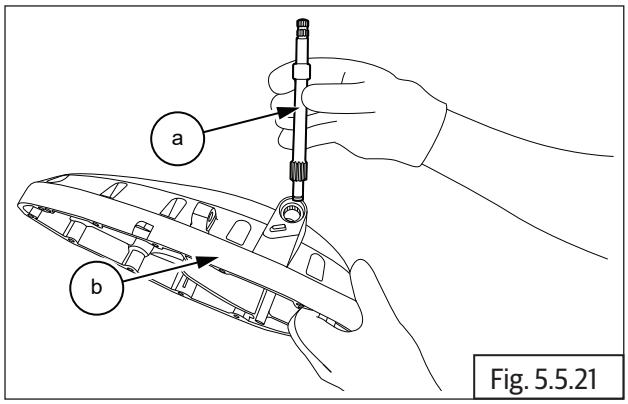

Fig. 5.5.21

- Remove needle roller **(a)** top from clutch cover with special tool.
- Remove needle roller bearing **(b)** bottom from clutch cover with special tool.

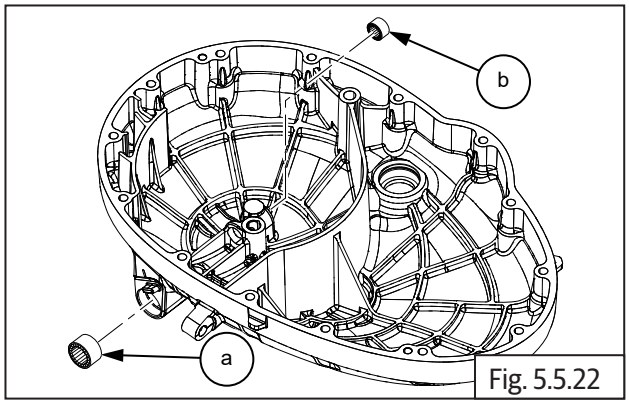

Fig. 5.5.22

SPL 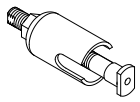	Part No: ST30265/a
	Part Name: Clutch actuating shaft top bearing puller

SPL 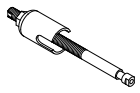	Part No: ST30263/a
	Part Name: Clutch actuating shaft bottom bearing puller

5.5.11. Oil Level Window

- Remove the circlip **(a)** on the oil level window inside clutch cover.

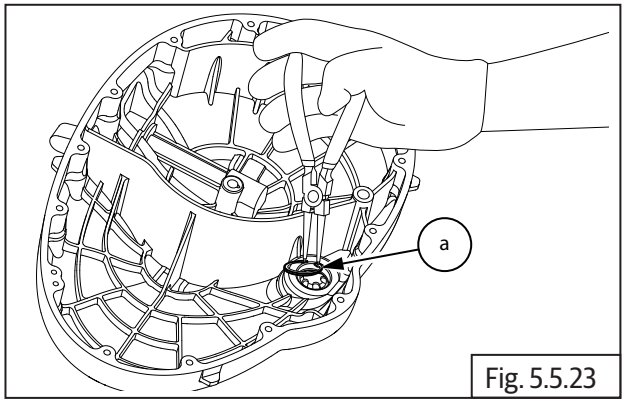

Fig. 5.5.23

	Circlip plier

- Gently press oil window **(a)** from outer side to remove from clutch cover.

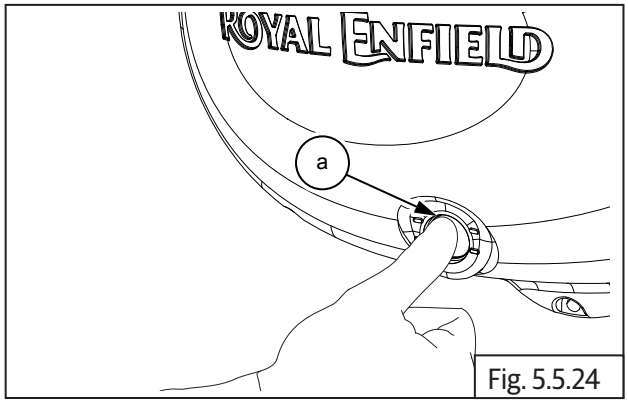

Fig. 5.5.24

5.5.12. Clutch Plates

⚠ CAUTION

Bolts are under spring tension. Loosen bolts progressively and slowly until spring tension is completely released.

- Loosen 3 Nos. Hex flange head bolts **(M6) (a)** on the pressure plate evenly and slowly until tension is released completely.

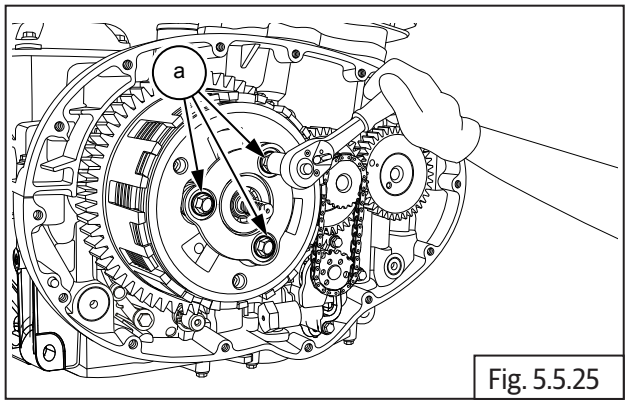

Fig. 5.5.25

	10 mm Socket with Ratchet

- Hold pressure plate **(a)** and remove the bolts **(b)**.
- Remove pressure plate and spring **(c)** from clutch hub.

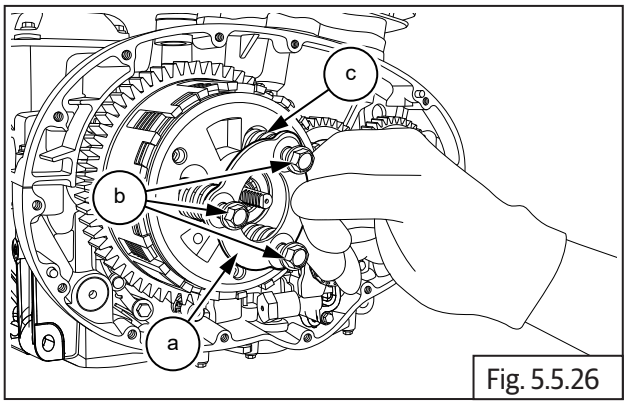

Fig. 5.5.26

- Remove clutch hub **(b)** along with 2 friction plates, 1 steel plate and pull rod **(a)** from the clutch bell.

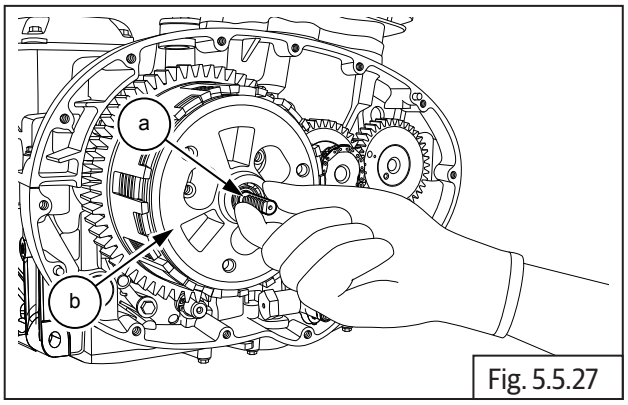

Fig. 5.5.27

- Remove the pull rod from the inner side of clutch bell.
- Remove 1st friction plate **(a)**, steel plate **(b)** and 2nd friction plate **(c)** from clutch hub **(d)**.

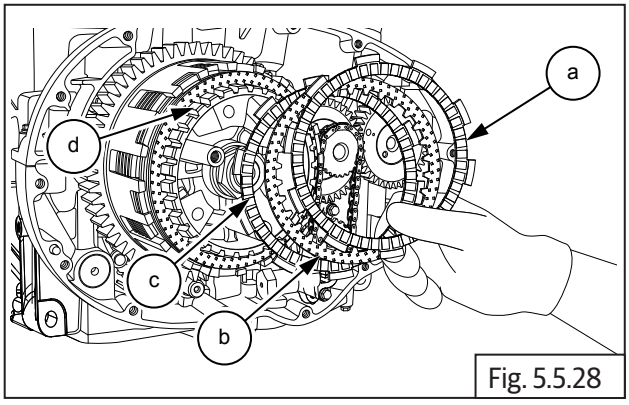

Fig. 5.5.28

- Locate special tool **(a)** on clutch center **(b)** and ensure it is seated fully on the splines.
- Hold the clutch center firmly and remove Hex "U" nut **(M17) (b)** by rotating clockwise.

⚠ CAUTION

Hex "U" nut is a left hand thread. Wrong rotation may damage the threads.

- Remove Hex U nut and washer from counter shaft.

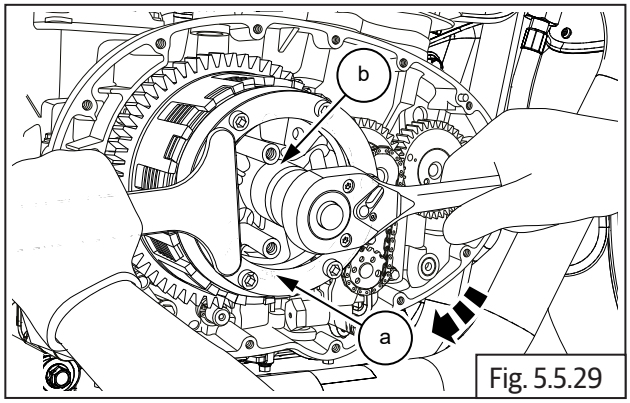

Fig. 5.5.29

SPL 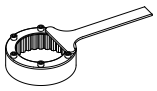	Part No: ST30266/a
	Part Name: Clutch holder

	24 mm Socket with Ratchet

- Remove special tool and pull out clutch bell assembly **(a)** from the counter shaft along with the remaining 6 plates **(b)** (3 each friction and steel plates) from the clutch housing.

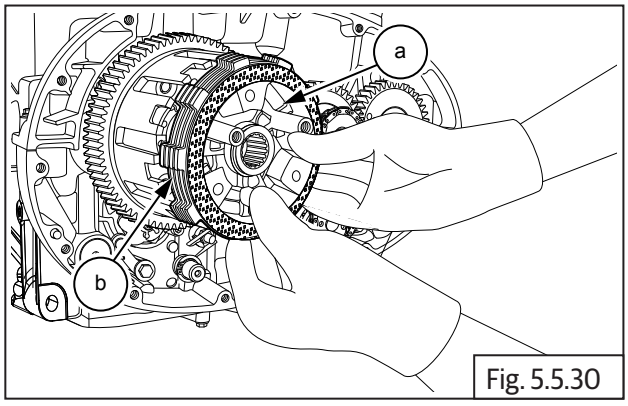

Fig. 5.5.30

NOTE

- *If the plates are to be reused, suitably mark the plates so that they can be reassembled in the same sequence as it was before dismantling.*

- Remove thrust washer **(a)** from counter shaft.

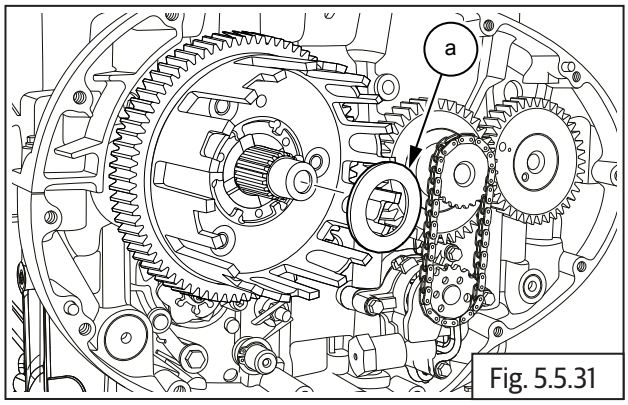

Fig. 5.5.31

- Remove clutch housing **(a)** from counter shaft .

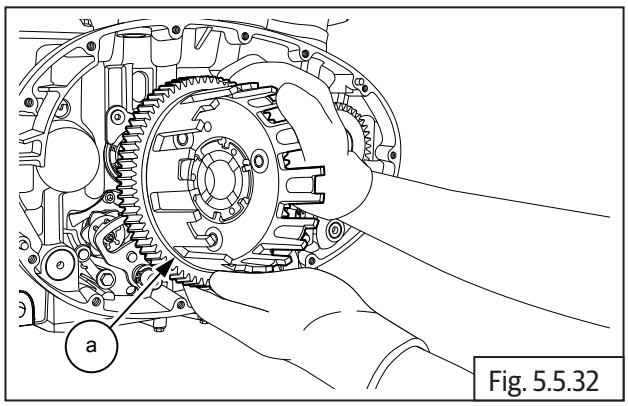

Fig. 5.5.32

- Remove the needle bearing **(a)**.

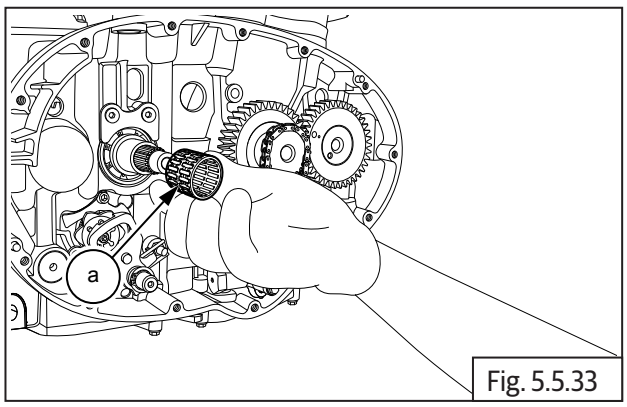

Fig. 5.5.33

- Remove collar bush **(a)** from counter shaft.

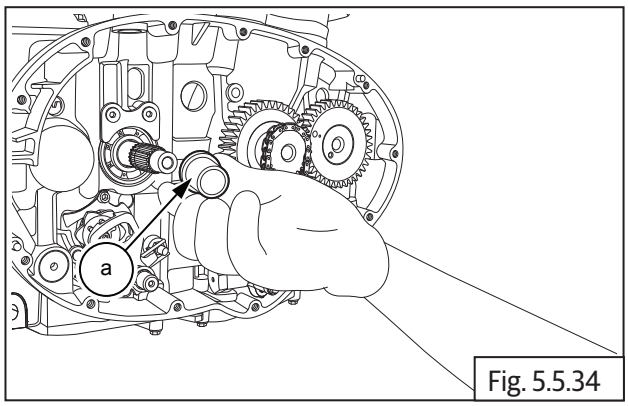

Fig. 5.5.34

5.5.13. Oil Pump

- Loosen and remove Hex flange bolt **(M5) (a)** on oil pump sprocket.

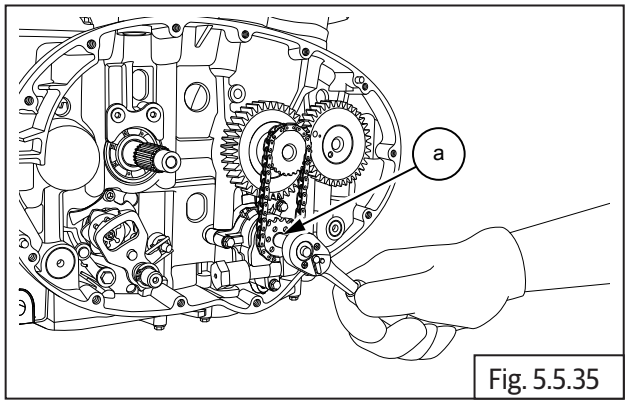

Fig. 5.5.35

	8 mm Socket with Ratchet

- Gently pull out the sprocket **(a)** from oil pump shaft.
- Release and remove chain **(b)** from the teeth on crankshaft sprocket **(c)**.

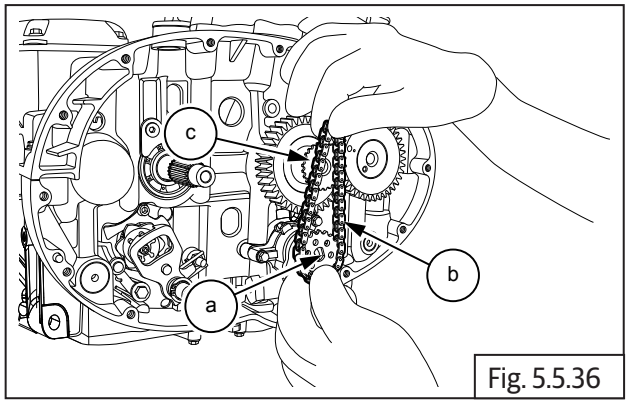

Fig. 5.5.36

- Loosen and remove 4 Nos. Hex flange head bolts **(M5) (a)**.

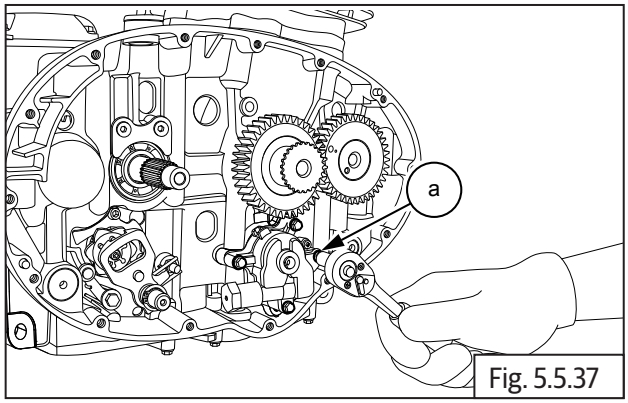

Fig. 5.5.37

	8 mm Socket with Ratchet

- Remove the oil pump **(a)** along with O-ring **(b)**.

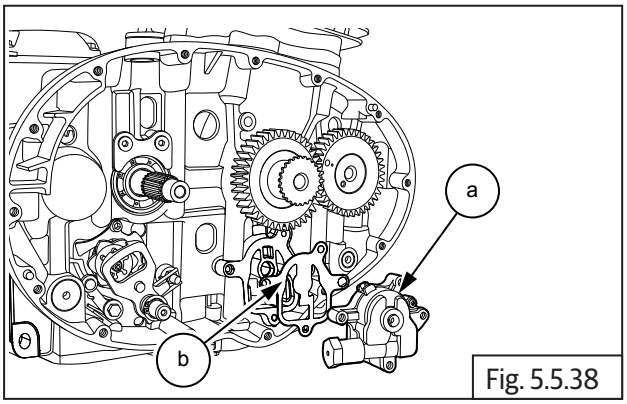

Fig. 5.5.38

NOTE
• *Inspect O-ring for any deformation OR damage and replace if required.*
• *The oil pump does not have any serviceable parts, hence as to be replaced only as a complete assembly.*

5.5.14. Gear Shifter Shaft

- Remove the circlip **(a)** from shifter shaft **(b)** on engine LH side.

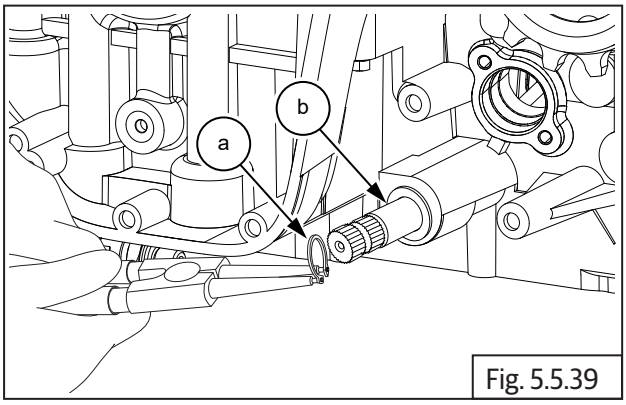

Fig. 5.5.39

	Circlip plier

- Remove the washer **(a)** from shifter shaft.

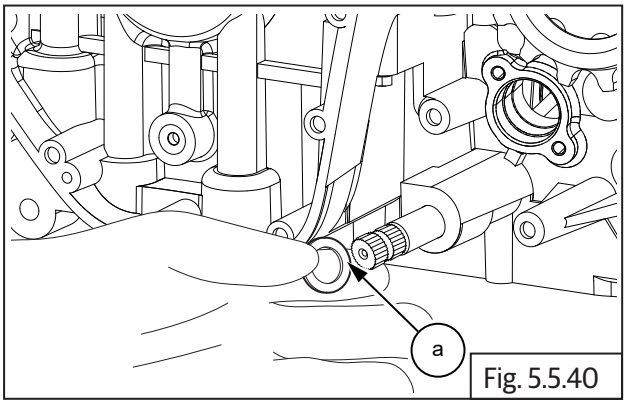

Fig. 5.5.40

- Gently pull out shifter shaft assembly **(a)** from engine RH side.

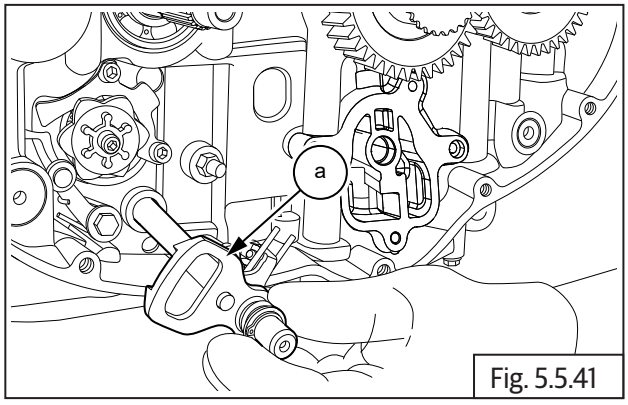

Fig. 5.5.41

- Remove circlip **(a)** from shorter end of shifter shaft **(b)**.

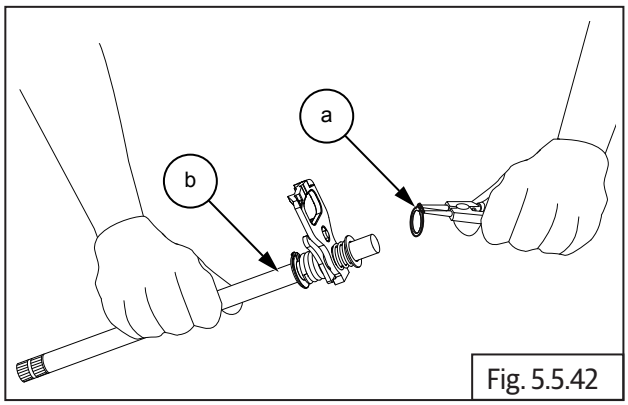

Fig. 5.5.42

	Circlip plier

- Remove washer **(a)** from shorter end of shifter shaft **(b)**.

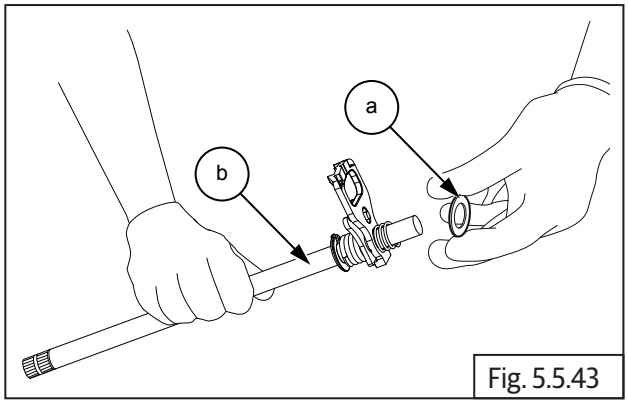

Fig. 5.5.43

- Remove spring **(a)** from shifter shaft **(b)**.

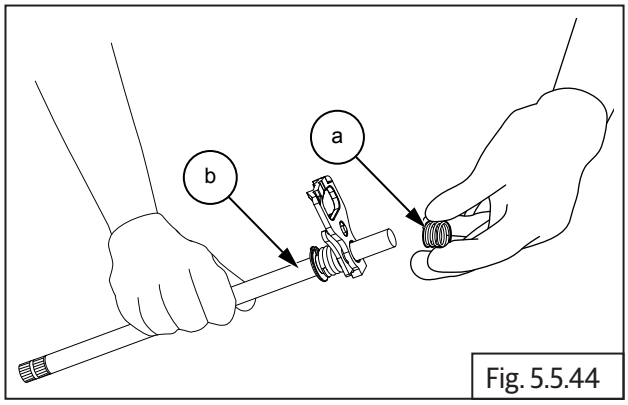

Fig. 5.5.44

- Remove plate **(a)** from shorter end of shifter shaft **(b)**.

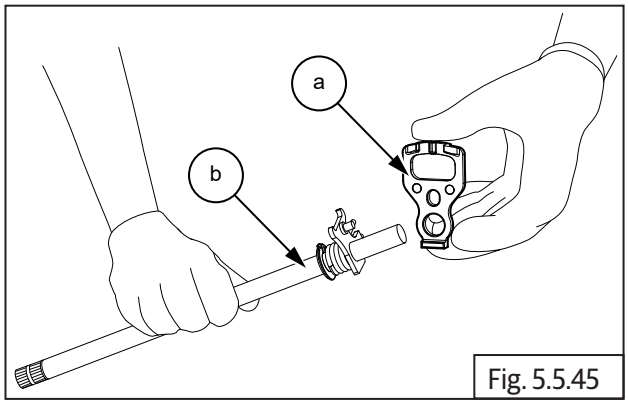

Fig. 5.5.45

- Remove circlip **(a)** from longer end of shifter shaft **(b)**.

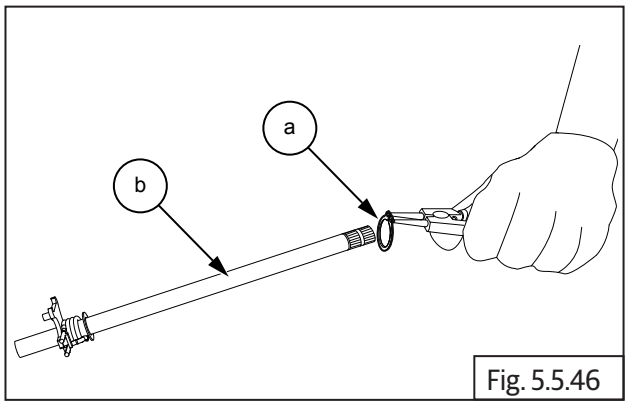

Fig. 5.5.46

	Circlip plier

- Remove washer **(a)** from longer end of shifter shaft **(b)**.

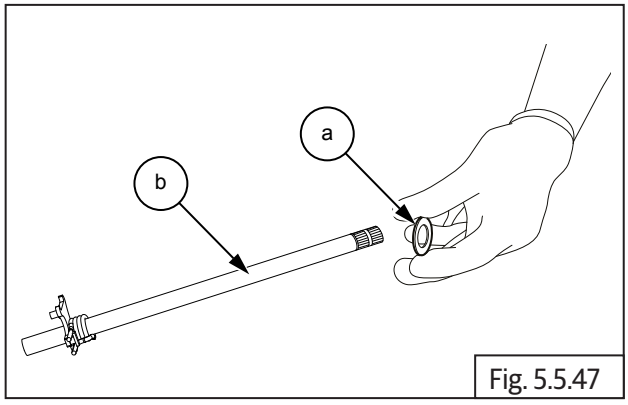

Fig. 5.5.47

- Expand spring legs and pull out spring **(a)** from longer end of shifter shaft **(b)**.

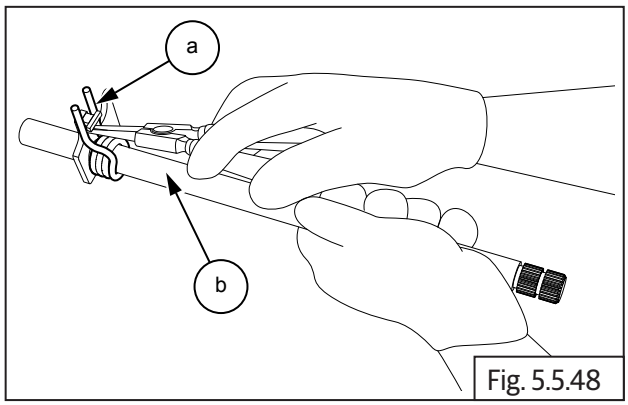

Fig. 5.5.48

	Circlip plier

5.5.15. Star Index Stopper

⚠ CAUTION

Spring loaded bolt. Support stopper while removing bolt.

- Loosen and remove Hex socket head bolt **(M6) (a)** from lower crankcase (RH) (clutch side).
- Remove stopper along with spring and washer.

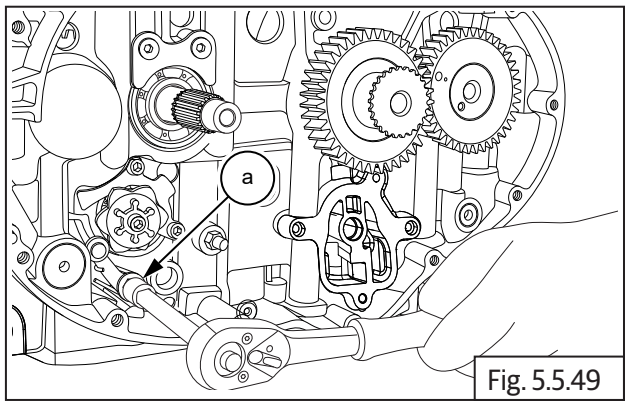

Fig. 5.5.49

	10 mm Socket with Ratchet

5.5.16. Star Index

- Loosen and remove Hex socket head stepped bolt **(M6) (a)** on gear shift cam drum.

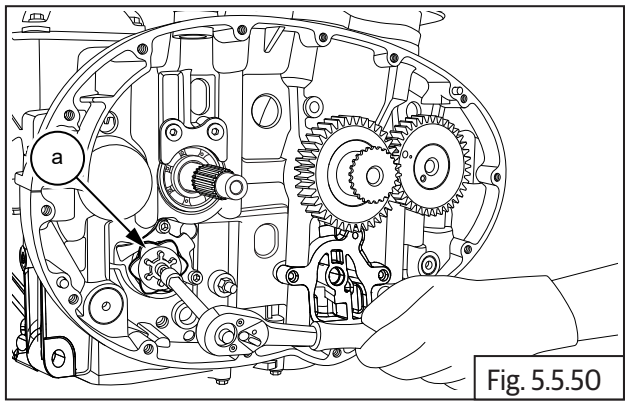

Fig. 5.5.50

	5 mm Allen socket with Ratchet

- Loosen and remove 2 Nos. Hex head bolts **(M6) (a)** from selector fork shaft stopper plate.

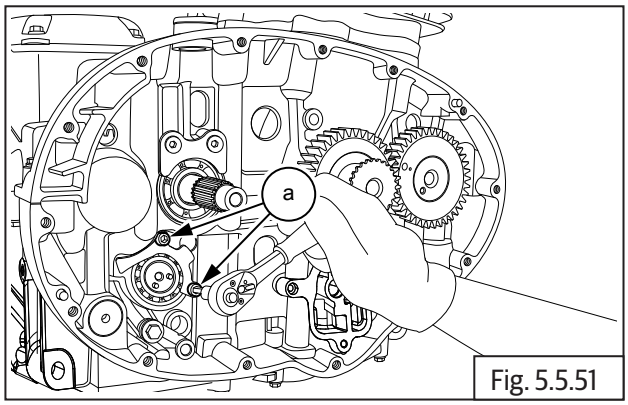

Fig. 5.5.51

	5 mm Allen socket with Ratchet

5.5.17. Reed Valves

- Loosen and remove 4 Nos. Hex socket head screws **(M6) (a)** holding reed valves to cylinder head.

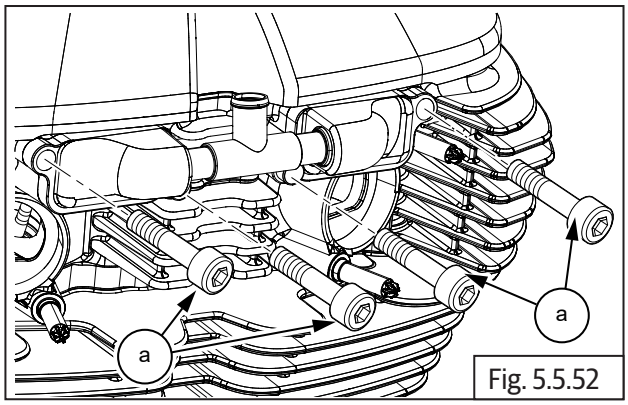

Fig. 5.5.52

	5 mm Allen Socket with Ratchet

- Remove reed valve **(a)** from the cylinder head.

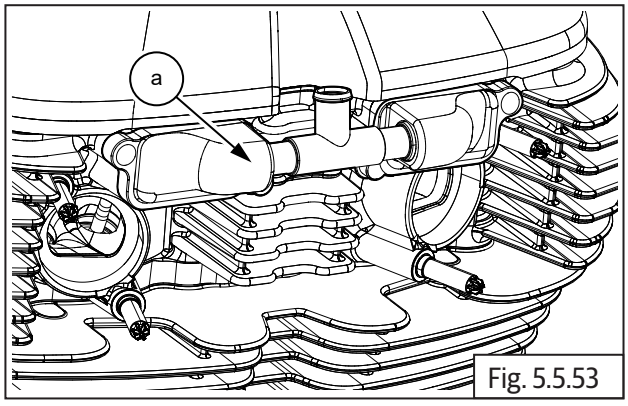

Fig. 5.5.53

5.5.18. Cylinder Head Cover

- Loosen and remove 4 Nos. Hex flange head bolts **(M5) (a)** in crisscross pattern along with the rubber seals and washers.

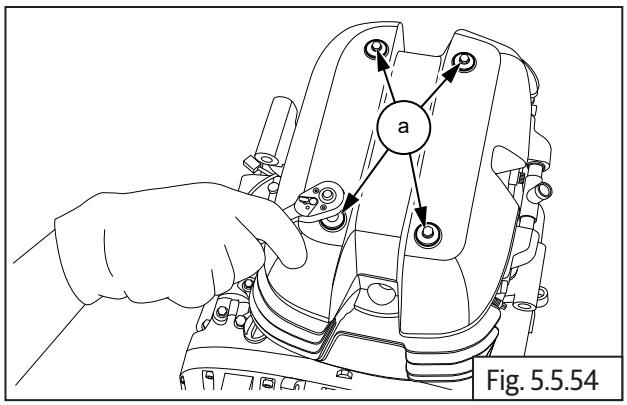

Fig. 5.5.54

	8 mm Socket with Ratchet

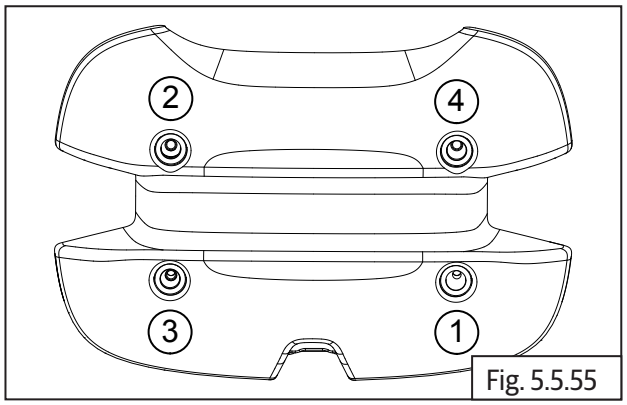

Fig. 5.5.55

- Gently remove rocker cover **(a)** from cylinder head **(b)**.

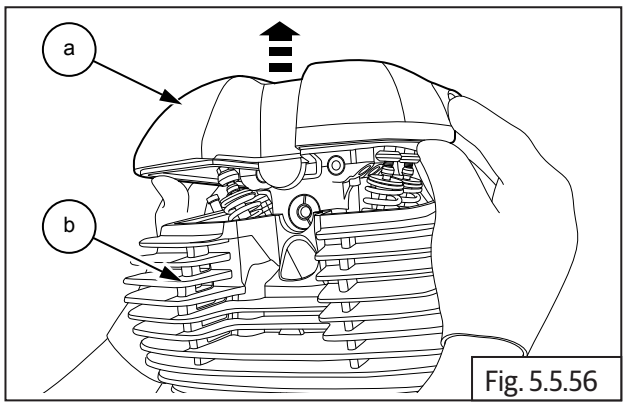

Fig. 5.5.56

- Remove rubber gasket **(a)** from cylinder head cover **(b)**.

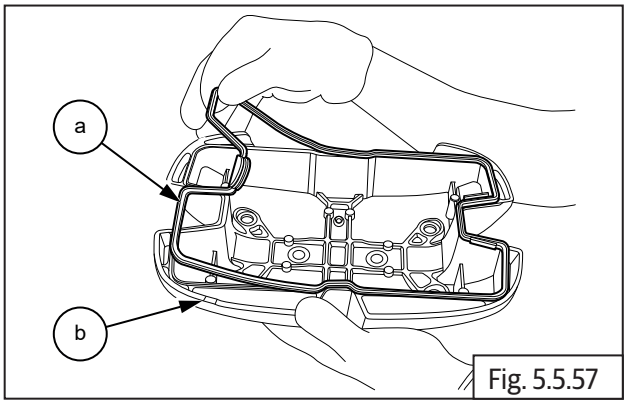

Fig. 5.5.57

5.5.19. Crankshaft Plug on Magneto Cover

- Remove crankshaft hole plug **(M34) (a)** from center of magneto cover **(b)**.

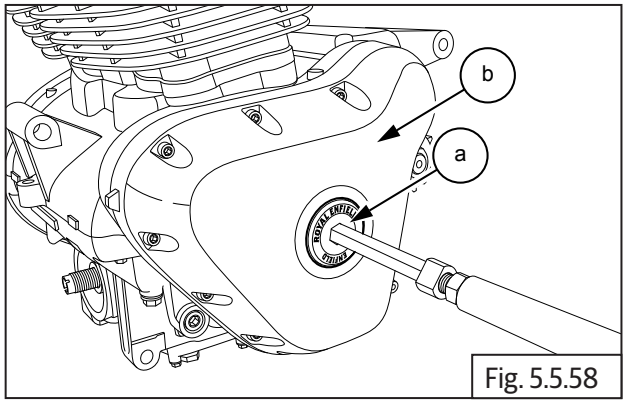

Fig. 5.5.58

	14 mm Allen key

- Remove O-ring **(a)** from crankshaft hole plug **(b)**.

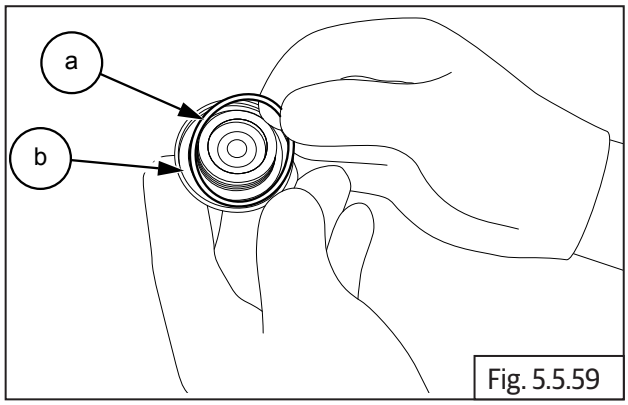

Fig. 5.5.59

5.5.20. Rocker Carrier LH Cylinder

- Locate 17mm socket with ratchet **(a)** on the magneto rotor bolt inside the plug hole and rotate magneto rotor in clockwise direction till reference mark "L" on camshaft LH side is aligned with machined gasket surface on cylinder head.

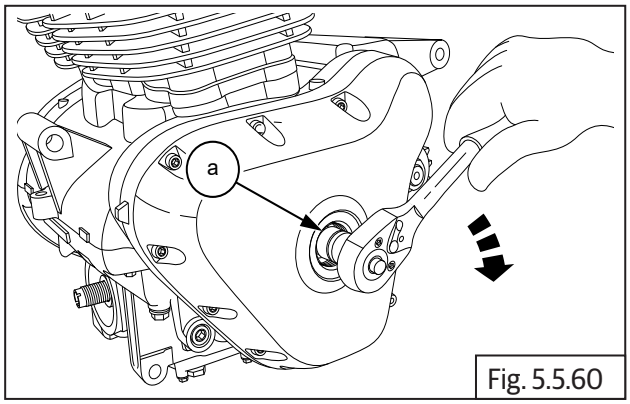

Fig. 5.5.60

	17 mm Socket with Ratchet

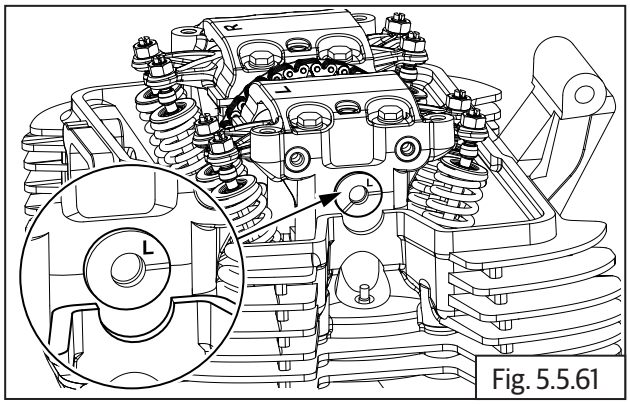

Fig. 5.5.61

- Loosen and remove 4 Nos. Hex flange head bolts **(M6) (a)** from rocker carrier.

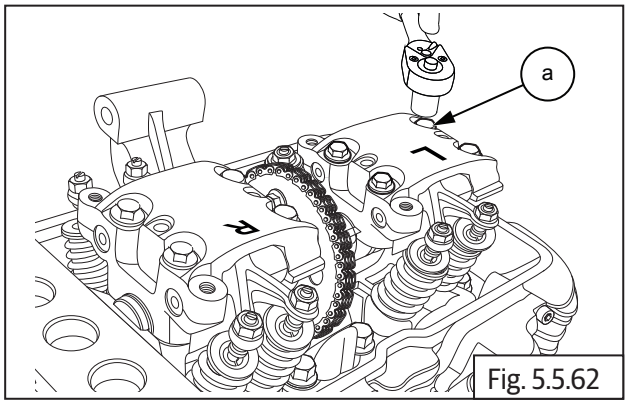

Fig. 5.5.62

	10 mm Socket with Ratchet

- Gently remove the rocker carrier **(a)** along with rocker arms from cylinder head.

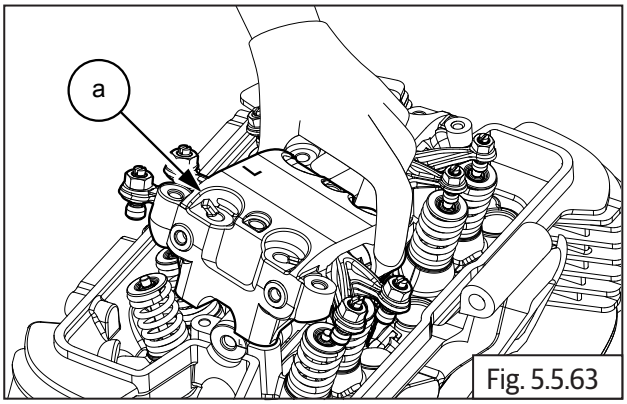

Fig. 5.5.63

5.5.21. Rocker Carrier RH Cylinder

- Locate 17mm socket with ratchet **(a)** on the magneto rotor bolt inside the plug hole and rotate magneto rotor in clockwise direction till reference mark "R" on camshaft LH side is aligned with machined gasket surface on cylinder head.

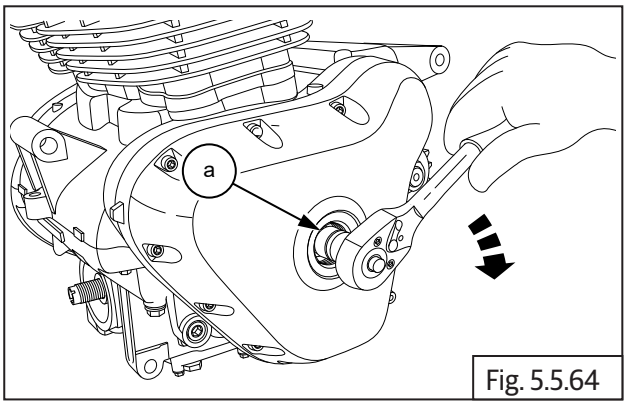

Fig. 5.5.64

	17 mm Socket with Ratchet

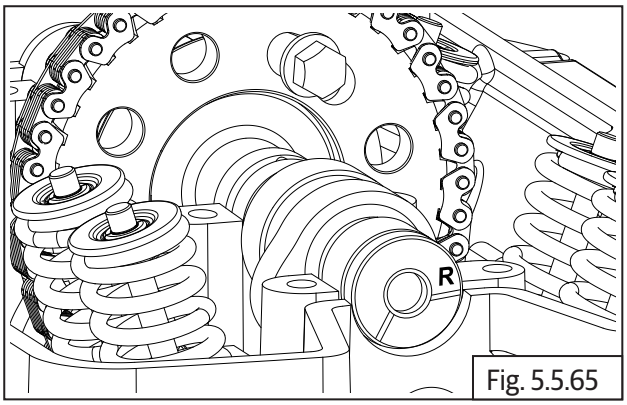

Fig. 5.5.65

- Loosen and remove 4 Nos. Hex head bolts **(M10) (a)** from rocker carrier RH.

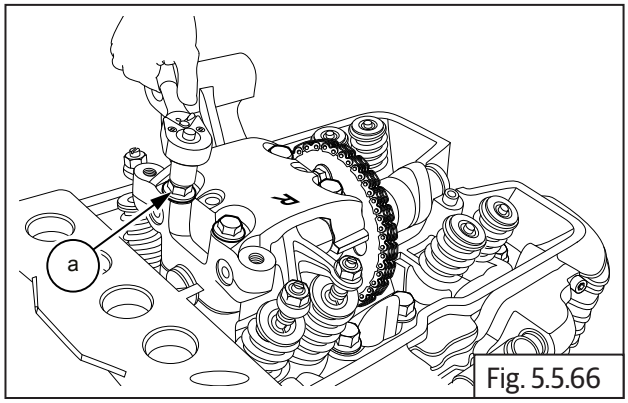

Fig. 5.5.66

	10 mm Socket with Ratchet

5.5.22. Rocker Arms from Rocker Carriers LH & RH

- Thread in a Hex flange bolt **(M6) (a)** into the threaded portion of rocker shaft **(b)**.
- Gently pull out rocker shaft from rocker carrier, duly supporting the rocker arms.
- Remove rocker arms inlet and exhaust from the rocker carrier.
- Repeat the procedures above to remove rocker arms from the other carrier.

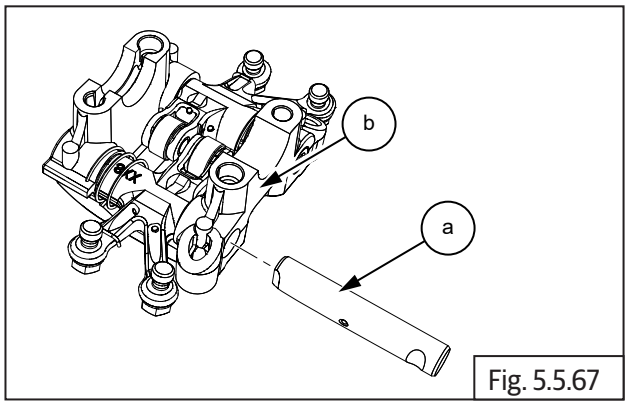

Fig. 5.5.67

- Gently depress the spring **(a)** and remove from rocker carrierrs **(b)**.

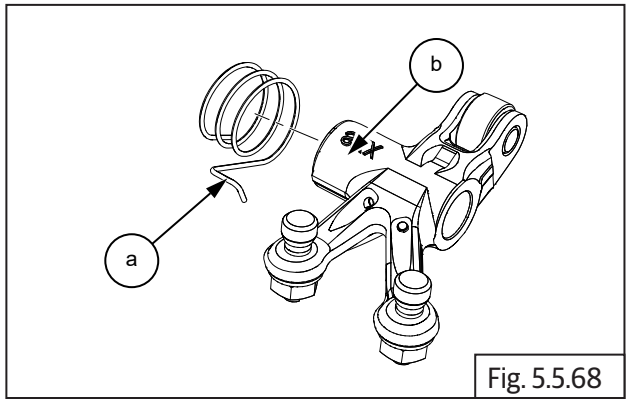

Fig. 5.5.68

5.5.23. Timing Chain Tensioner

- Loosen and remove center Hex flange bolt **(M6) (a)** from cylinder barrel.

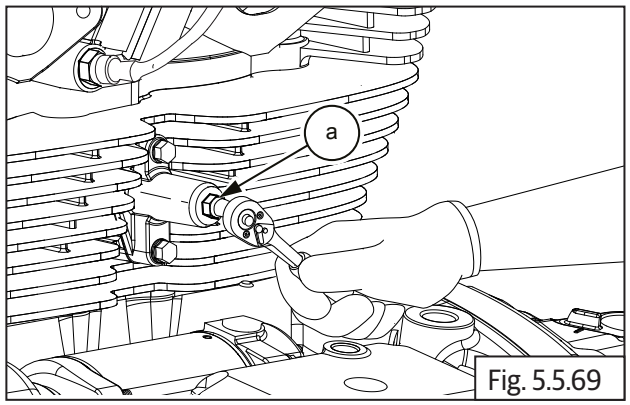

Fig. 5.5.69

	10 mm Socket with Ratchet

- Insert screw driver into chain tensioner housing and turn clockwise until pad is free.

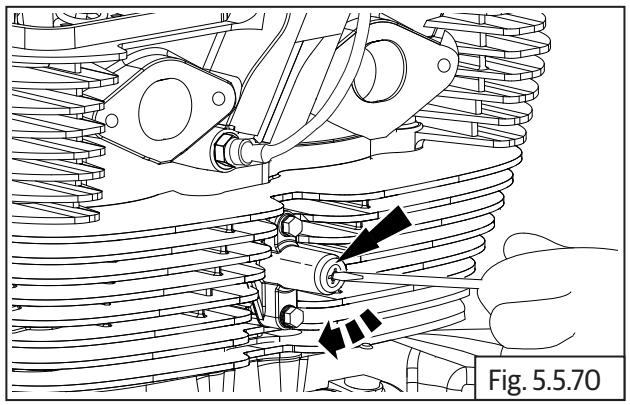
Fig. 5.5.70

	Screw driver

- Loosen and remove 2 Nos. Hex flange bolts **(M6) (a)** from cylinder barrel **(b)**.

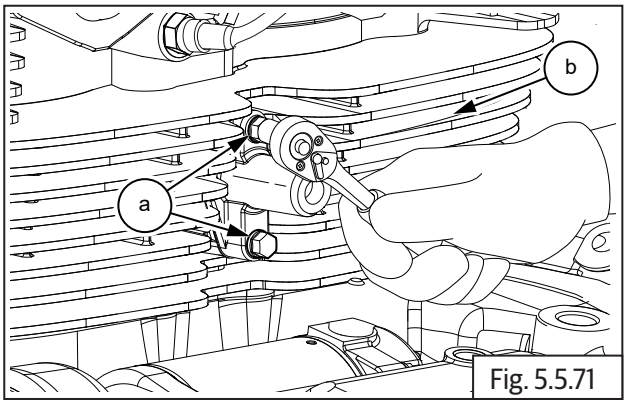

Fig. 5.5.71

	10 mm Socket with Ratchet

- Remove timing chain pad adjuster **(a)** from cylinder barrel.

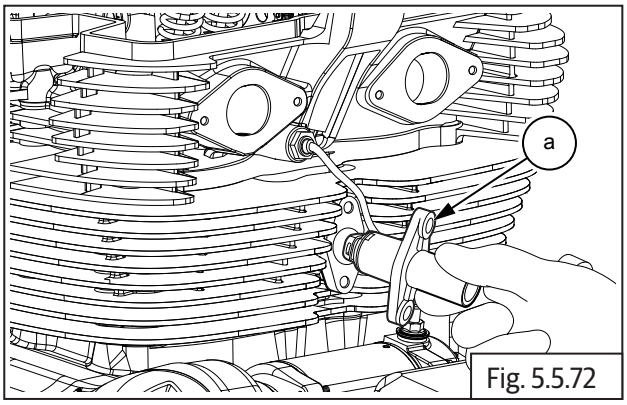

Fig. 5.5.72

5.5.24. Cam Shaft, Sprocket & Chain

- Rotate magneto rotor in clockwise direction, till one of the Hex head bolts on cam chain sprocket appears at the top most position.

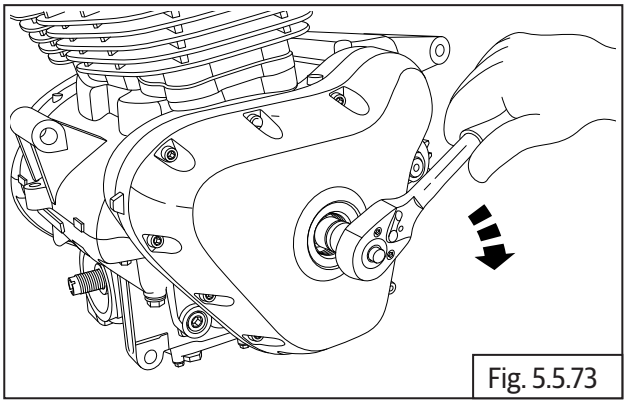
Fig. 5.5.73

	17 mm Socket with Ratchet

- Loosen and remove 1st Hex head bolt **(M8) (a)** from cam sprocket.

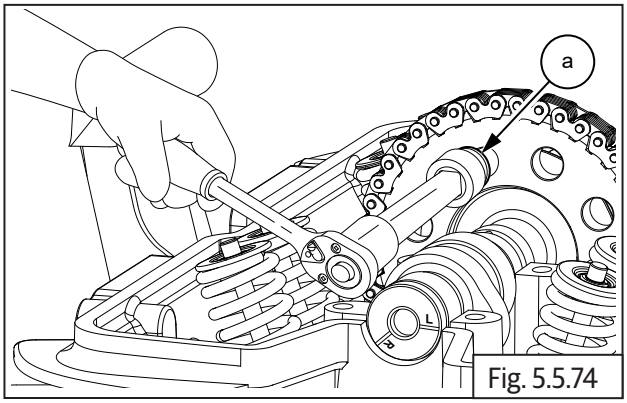

Fig. 5.5.74

	12 mm Socket with Ratchet

- Rotate magneto rotor in clockwise direction till other bolt is visible at top most position.

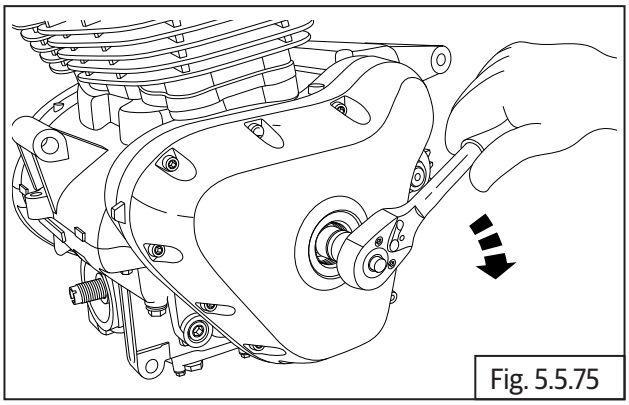
Fig. 5.5.75

	17 mm Socket with Ratchet

- Loosen and remove 2nd Hex head bolt **(M8) (a)** from cam sprocket.

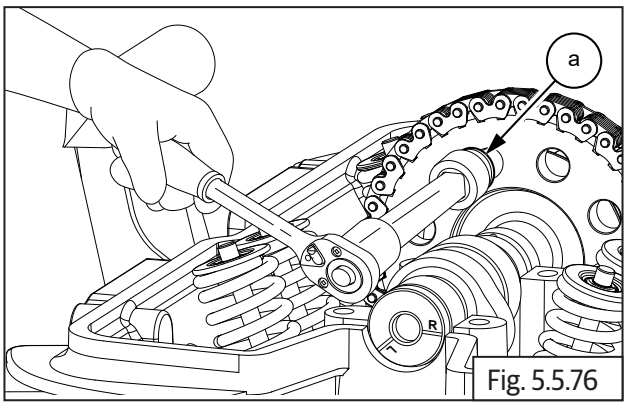

Fig. 5.5.76

	12 mm Socket with Ratchet

- Remove "C" washer **(a)** from groove in cylinder head LH to release cam shaft.

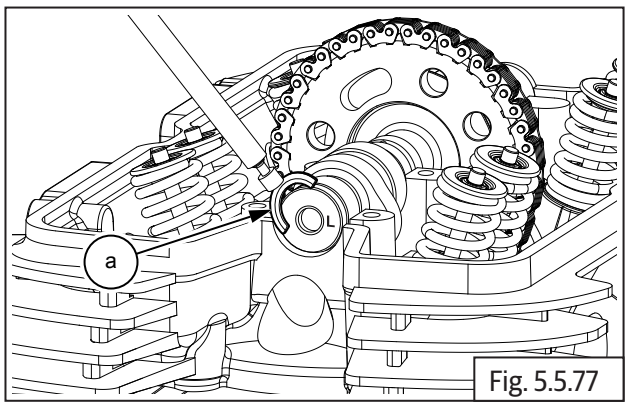

Fig. 5.5.77

	Magnetic stick

- Gently release timing chain **(a)** from camshaft sprocket and remove camshaft **(b)** from cylinder head assembly.

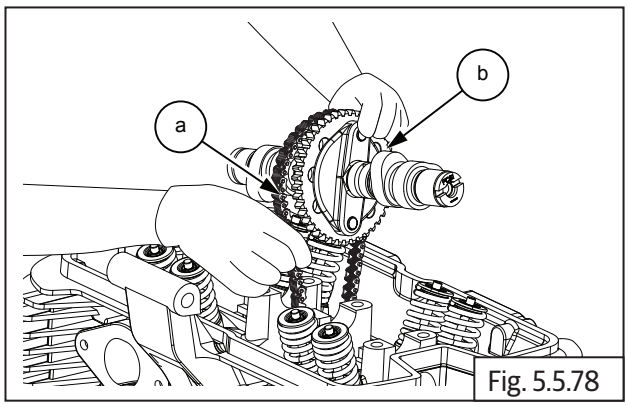

Fig. 5.5.78

- Support timing chain suitably at the top to prevent it from dropping into the crankcase.

5.5.25. Magneto Cover

- Loosen and remove 12 Nos. Hex socket head bolts **(M6) (a)** in crisscross pattern to remove magneto cover **(b)** from LH.

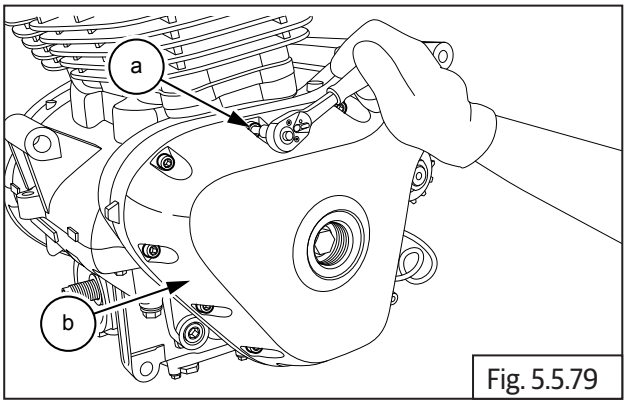

Fig. 5.5.79

	5 mm Allen socket with Ratchet

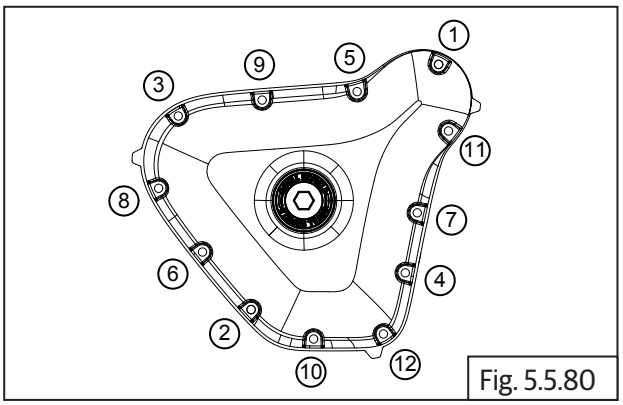

Fig. 5.5.80

- The magneto cover may be hard to remove from crankcase, due to the magnetic force from the magneto acting on the stator coil.
- Gently tap on the tabs **(a)** with a plastic / rubber mallet, on the inside edges of the magneto cover, to remove.

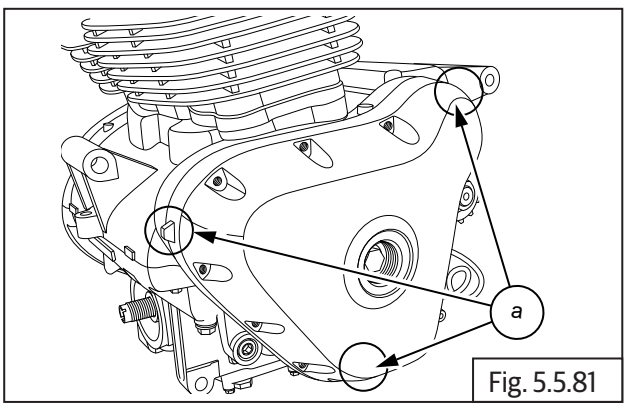

Fig. 5.5.81

	Plastic/Rubber mallet

- Remove gasket **(a)**.

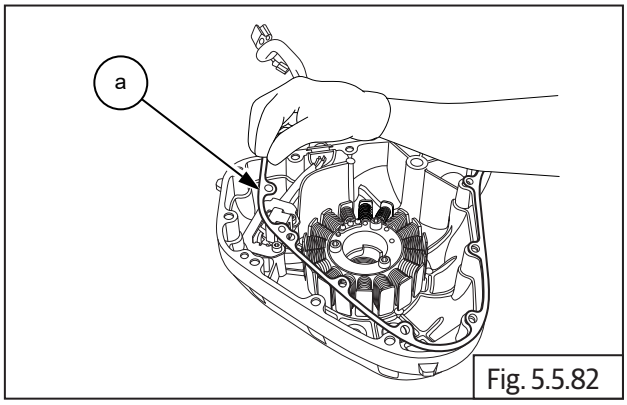

Fig. 5.5.82

⚠ CAUTION

Do not use a sharp tool to scrap the gasket material from the joint faces.

If required scrap only with a soft and blunt tool.

- Remove the 2 dowel pins **(a)** and **(b)** from the crankcases/magneto cover.

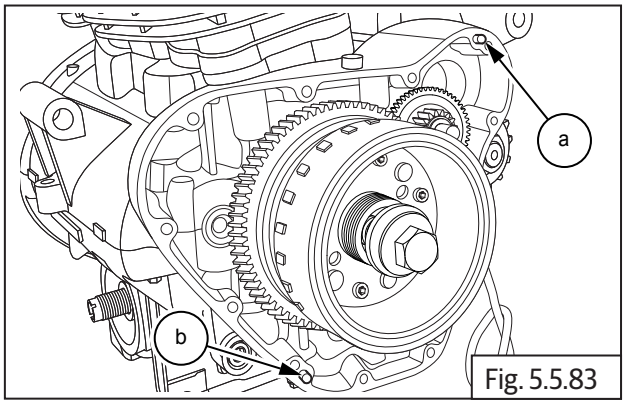

Fig. 5.5.83

5.5.26. Stator Assembly with CPS

Stator Assembly with Crank Position Sensor (CPS)

- Loosen and remove 3 Nos. Hex socket head screws **(M6) (a)** holding the stator assembly **(b)**.

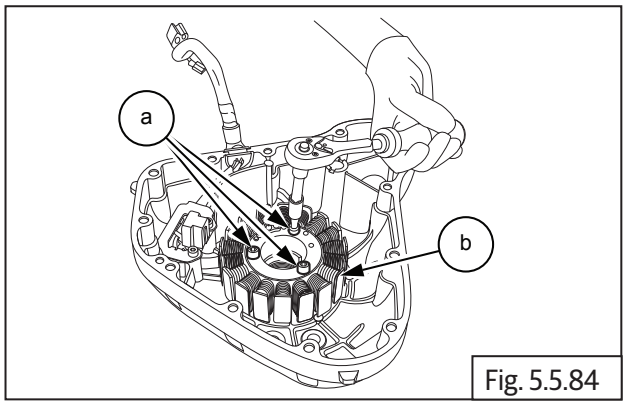

Fig. 5.5.84

	5 mm Allen socket with Ratchet

- Loosen and remove 2 Nos. Hex socket head screws **(M6) (a)** on guide plate **(b)**, holding crank position sensor to magneto cover.

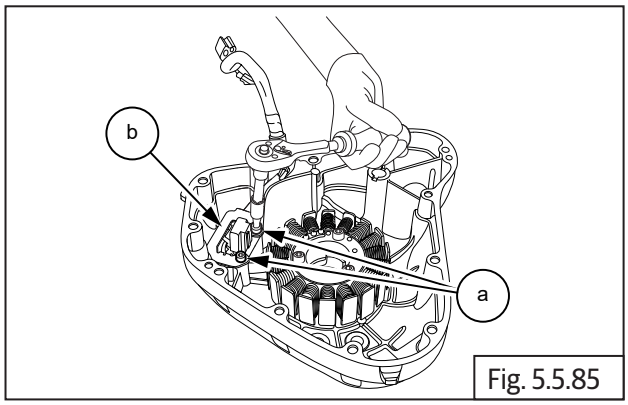

Fig. 5.5.85

	5 mm Allen socket with Ratchet

- Remove the guide plate **(a)** from magneto cover.

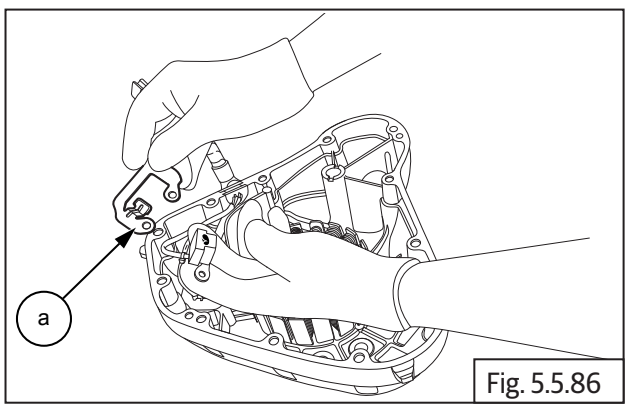

Fig. 5.5.86

- Gently release the wiring grommet **(a)** from the magneto cover.
- Gently remove stator assembly **(b)** from magneto cover.

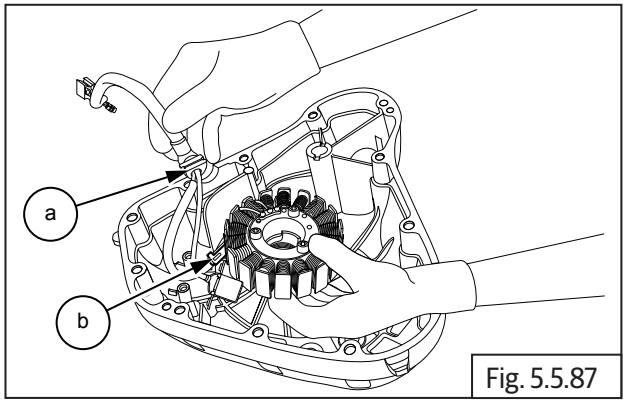

Fig. 5.5.87

5.5.27. Magneto Rotor Bolt

- In order to loosen magneto rotor bolt, it will be necessary to remove clutch cover Refer (Section 5.1.16).
- Insert special tool **(a)** in crankcase RH to lock the crankshaft and prevent rotation.

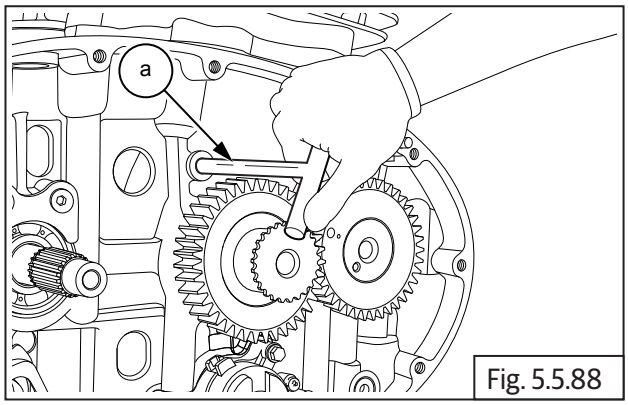

Fig. 5.5.88

SPL 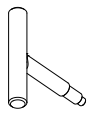	Part No: ST-27533-2
	Part Name: Magneto and Clutch locking tool

- Loosen and remove Hex flange head bolt **(M12) (a)**.

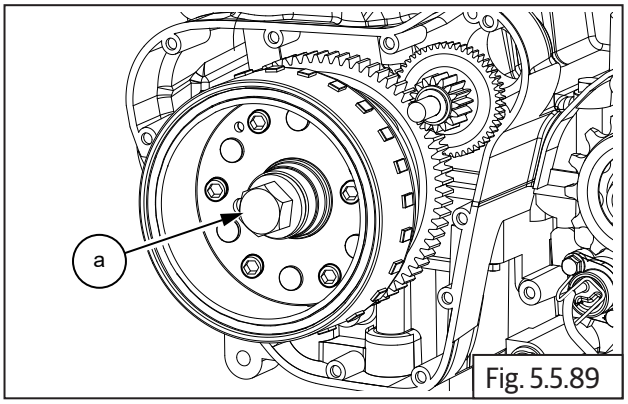

Fig. 5.5.89

	17 mm Socket with Ratchet

- Ensure center bolt of magneto rotor puller is loosened sufficiently.
- Assemble puller **(b)** on magneto rotor **(a)** and thread in fully.
- Tighten center bolt onto puller till magneto rotor gets rreleased from crankshaft.

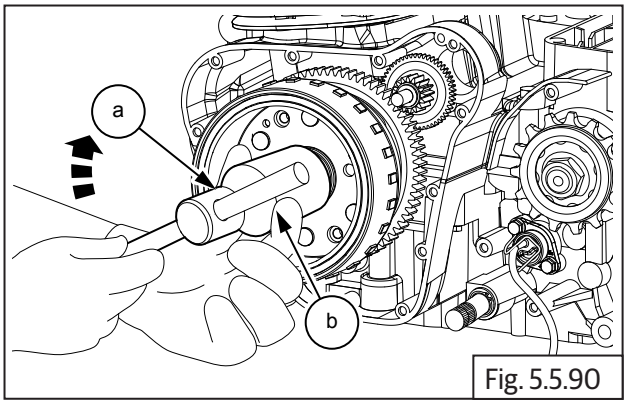

Fig. 5.5.90

SPL 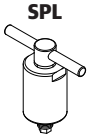	Part No: ST30274/a
	Part Name: Magneto Puller Assembly

- Gently pull out magneto rotor assembly **(a)** with starter clutch.

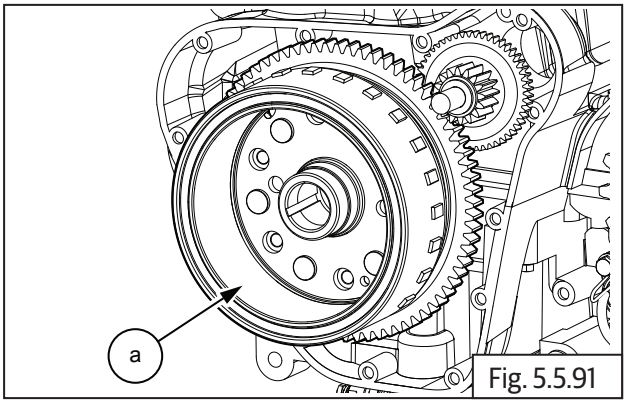

Fig. 5.5.91

- Remove woodruff key **(a)** from crankshaft.

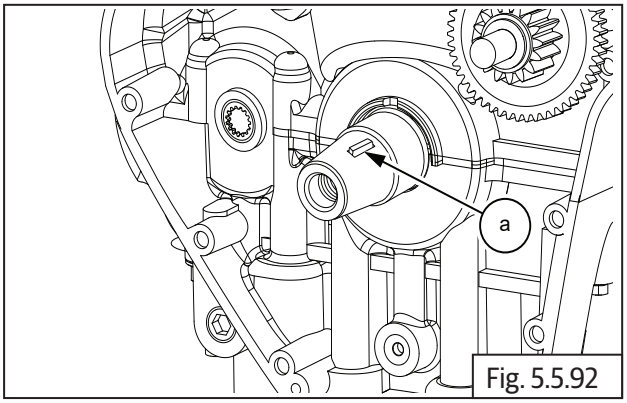

Fig. 5.5.92

5.5.28. Starter Clutch from Magneto Rotor

- Slightly loosen 6 Nos. Hex socket head screws **(M6) (a)** from inside magneto rotor. **Do not LOOSEN AND REMOVE FULLY**.

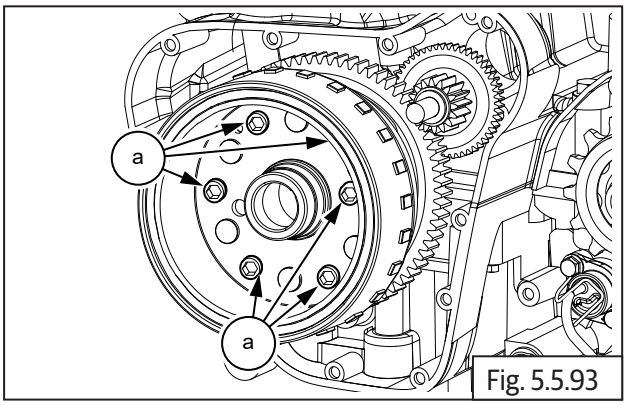

Fig. 5.5.93

	5 mm Allen socket with Ratchet

- Remove magneto rotor assembly **(a)** from crank shaft, hold the rotor firmly, rotate gear starter clutch **(b)** anti-clockwise and pull out simultaneously to separate rotor from the gear.

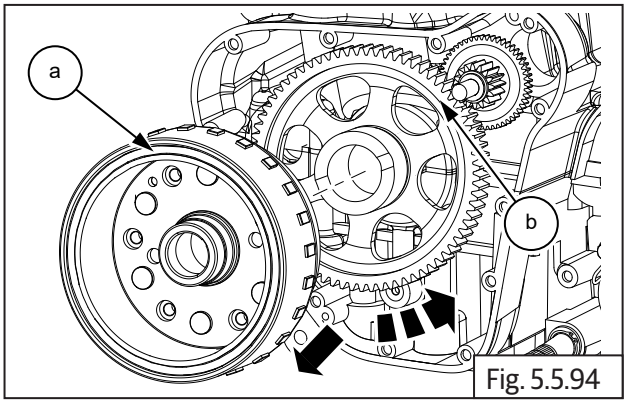

Fig. 5.5.94

- Remove starter idle gear **(a)**.

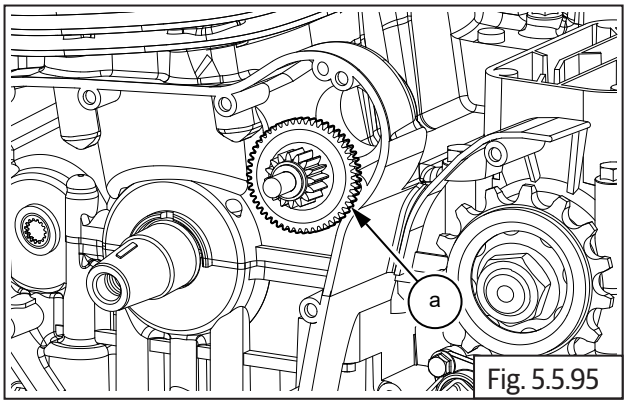

Fig. 5.5.95

- Loosen and remove 6 Nos. Hex socket head screws **(M6) (a)** from inside magneto rotor **(b)** and separate starter clutch with outer ring **(c)**.
- Remove starter clutch from outer ring.

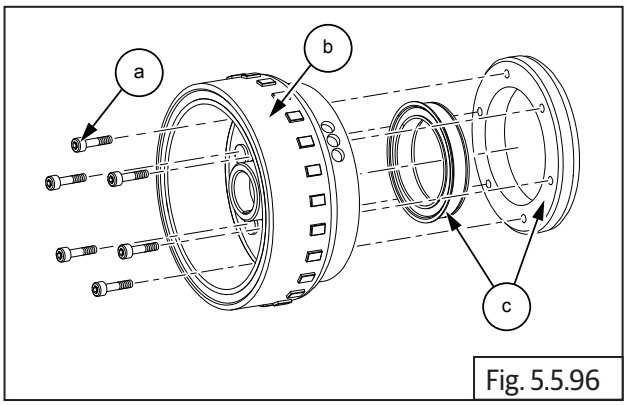

Fig. 5.5.96

	5 mm Allen socket with Ratchet

5.5.29. Gear Position Sensor

- Loosen and remove 2 Nos. Hex head bolts **(M6) (a)** along with bracket located below the FD sprocket **(b)**.

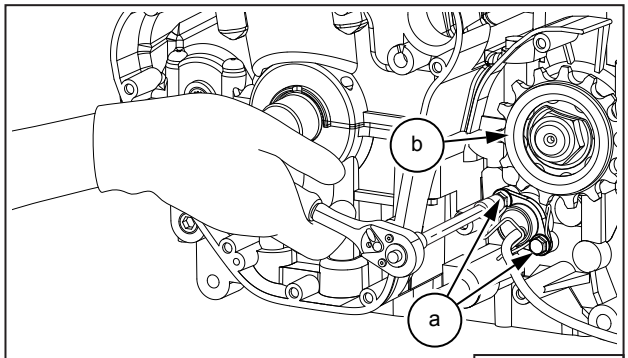

Fig. 5.5.97

	10 mm Socket with Ratchet

- Remove cable holder **(a)**.

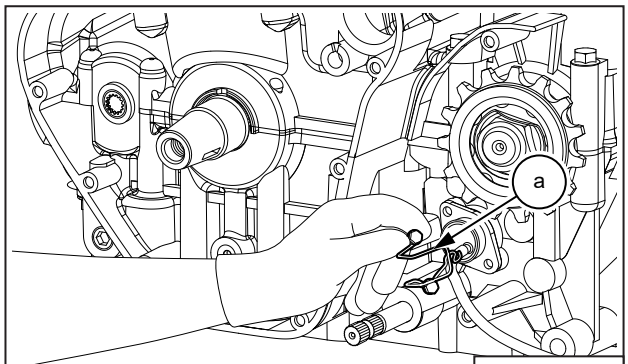

Fig. 5.5.98

- Gently remove gear position sensor **(a)**.

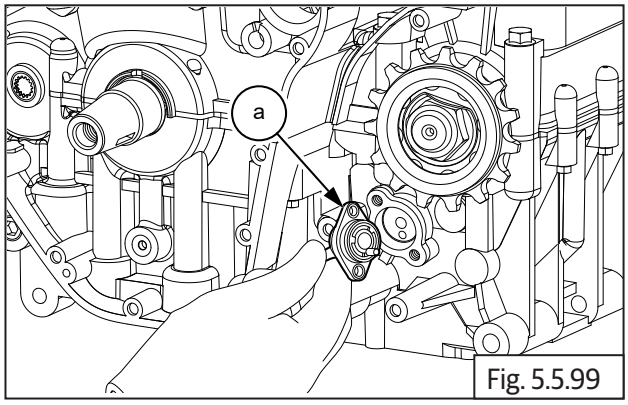

Fig. 5.5.99

5.5.30. FD Sprocket

- Tap to open lock tab holder **(a)** located over FD sprocket **(b)**.

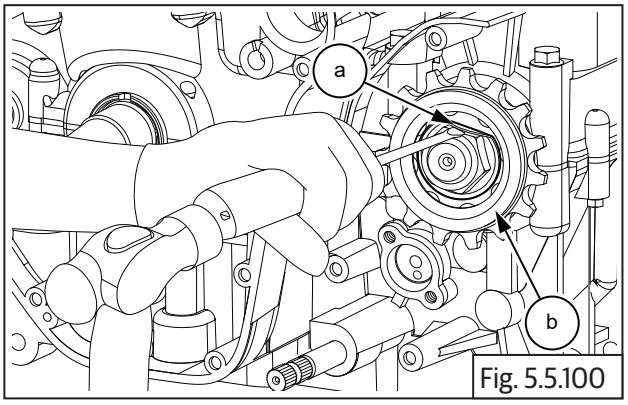

Fig. 5.5.100

	Chisel and Hammer

- Locate special tool over FD sprocket **(a)** and loosen "U" nut **(M20) (b)**.

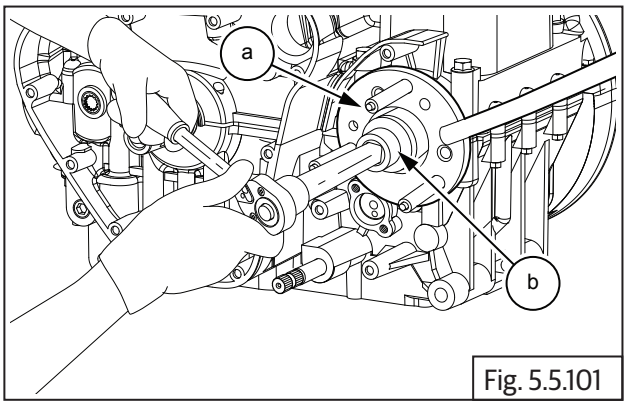

Fig. 5.5.101

SPL	Part No: ST-27534-2
	Part Name: FD sprocket holder
	30 mm Socket with Ratchet

- Remove lock tab washer **(a)** from shaft.

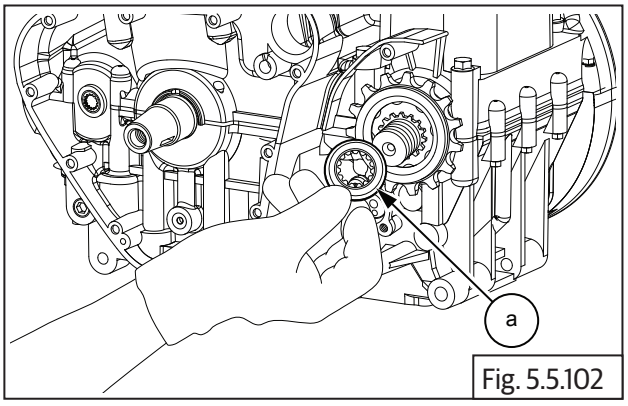

Fig. 5.5.102

- Remove FD sprocket **(a)** from drive shaft **(b)**.

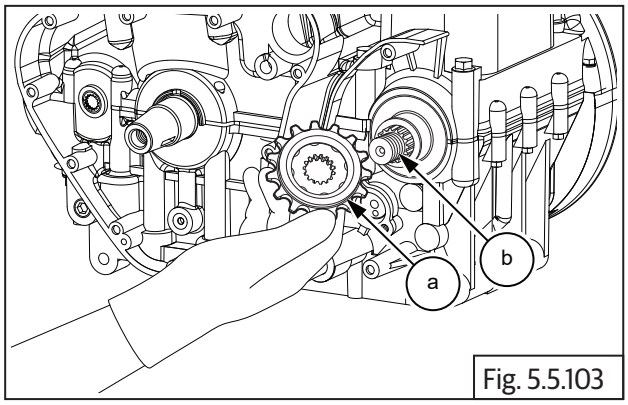

Fig. 5.5.103

- Gently remove spacer **(a)** from drive shaft.

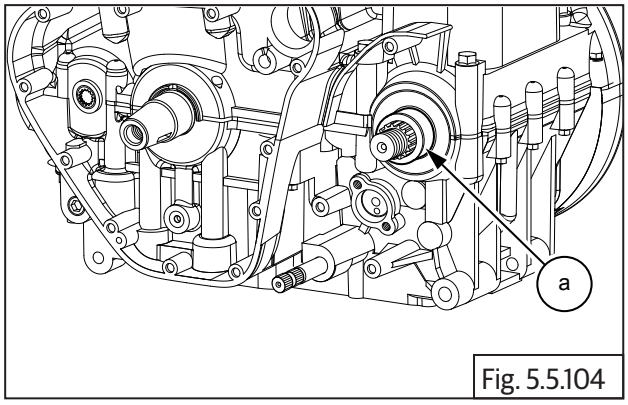

Fig. 5.5.104

⚠ CAUTION

Do not use sharp tool to remove spacer as it may damage the parts.

5.5.31. Cylinder Head

- Remove oil temperature sensor (section 10.1.8).

⚠ CAUTION

Cylinder bolts are one time usage only. Always use new head bolts during installation. Dispose old head bolts suitably.

- Loosen and remove 8 Nos. Hex head bolts **(M10) (a)** in crisscross pattern on cylinder head.

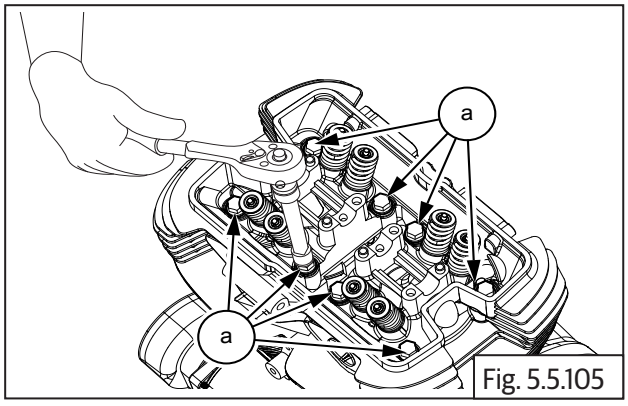

Fig. 5.5.105

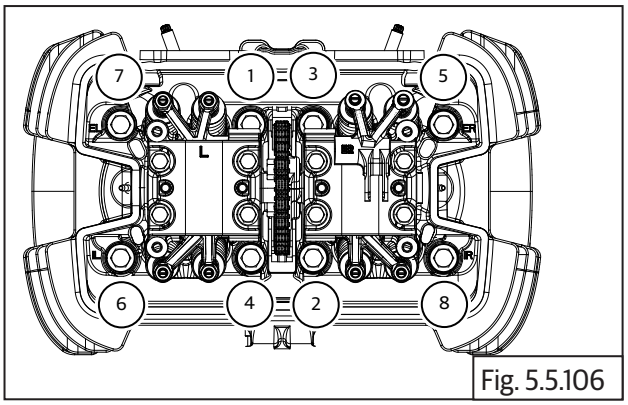

Fig. 5.5.106

	12 mm Socket with Ratchet

- Support cam chain suitably and gently remove cylinder head **(a)** from cylinder barrel **(b)**.

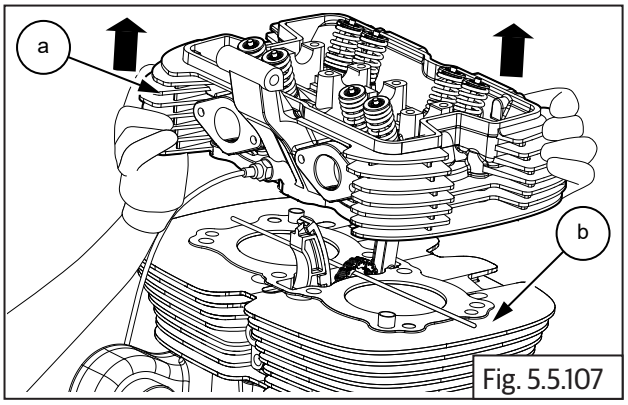

Fig. 5.5.107

- Remove the cylinder head gasket **(a)** from cylinder barrel **(b)**.

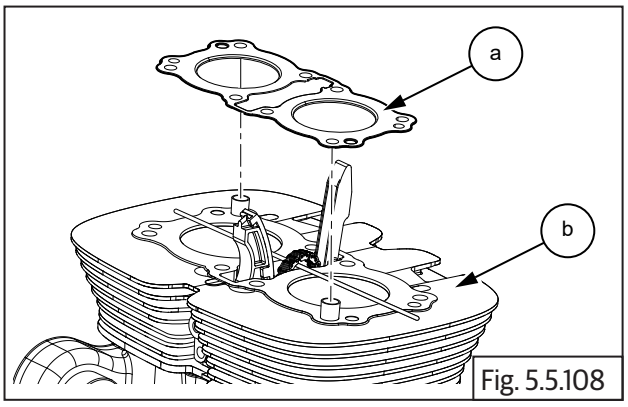

Fig. 5.5.108

5.5.32. Components from Cylinder Head

Valves and Springs

- Compress valve spring with special tool **(a)**.

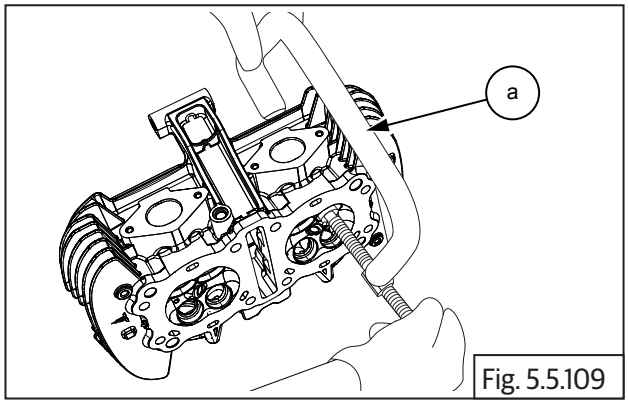

Fig. 5.5.109

SPL	Part No: ST-27528-2
	Part Name: Valve spring compressor

- Remove the cotters **(a)** on valve stem at the top.

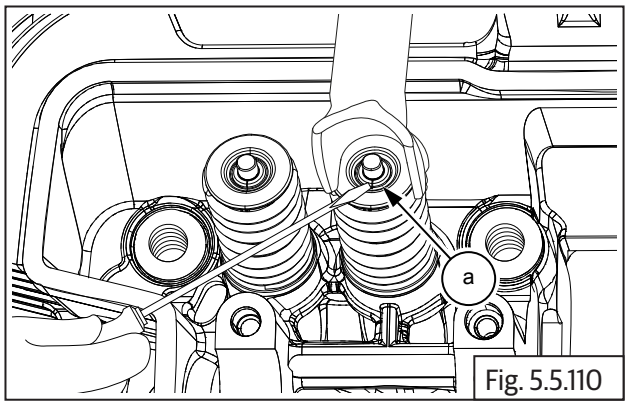

Fig. 5.5.110

SPL	Part No: ST-27528-2
	Part Name: Valve spring compressor

- Gently loosen the screw on valve spring compressor, till the valve spring tension is completely released and remove the special tool.

⚠ CAUTION

Valve spring under high tension when compressed .

Release valve spring compressor tool slowly and with care.

- Remove the retainer, valve spring **(a)** from the top of the valve spring **(b)**.

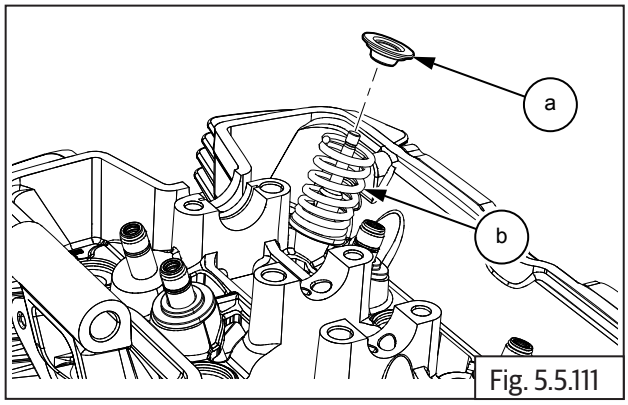

Fig. 5.5.111

- Remove valve spring **(a)** from valve stem **(b)**.

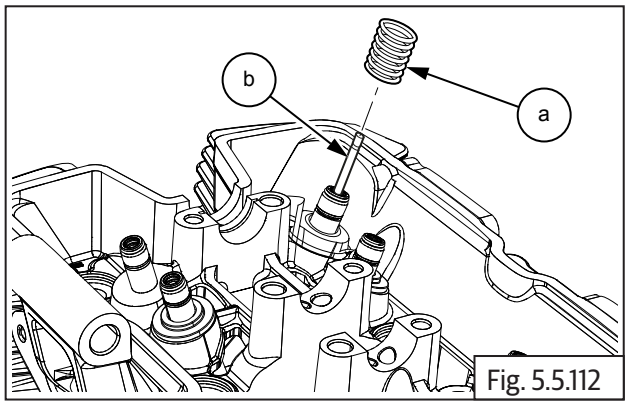

Fig. 5.5.112

- Remove valve **(a)** from cylinder head **(b)** by pulling it out from the cylinder head inside.

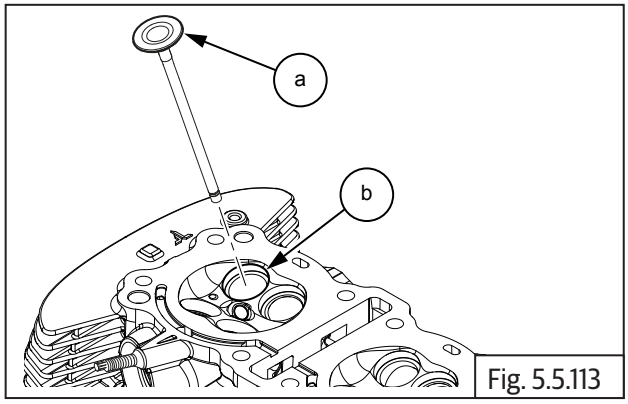

Fig. 5.5.113

- Remove valve stem seal **(a)** from valve guide **(b)**.

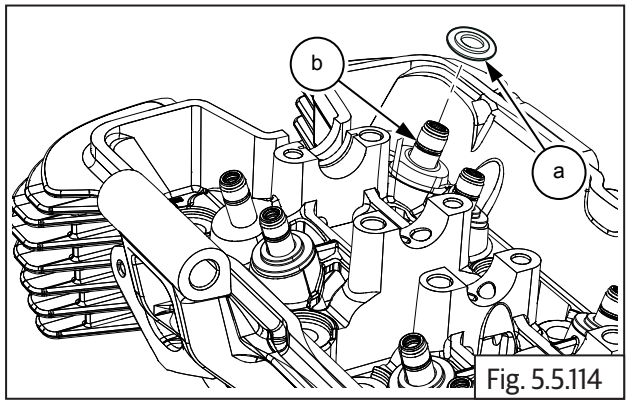

Fig. 5.5.114

- Follow the same procedure to remove the other valves from the cylinder head.

5.5.33. Floating Chain Pad

- Remove the floating chain pad **(a)** from front end of the cylinder barrel.

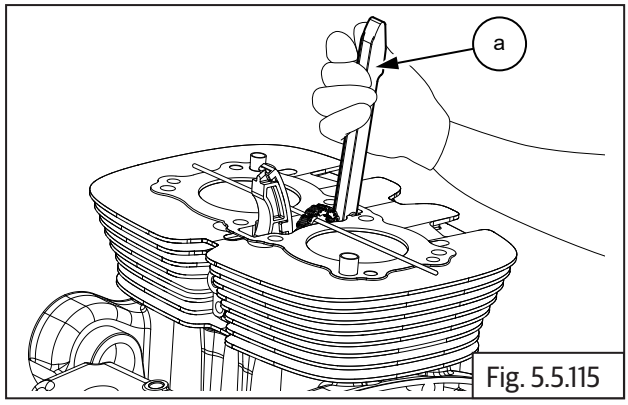

Fig. 5.5.115

5.5.34. Cylinder Barrel

- Slightly tilt and gently remove the cylinder barrel **(a)** from crankcase **(b)**.

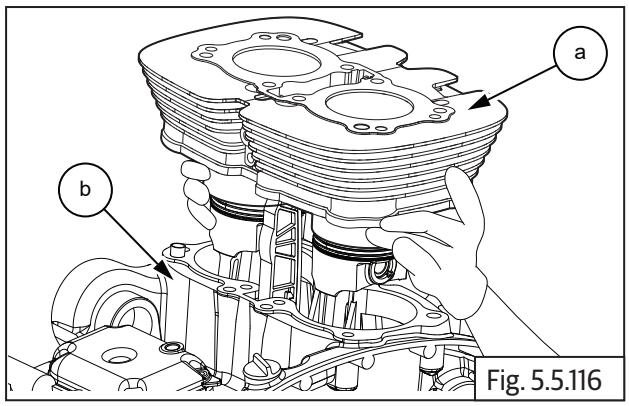

Fig. 5.5.116

5.5.35. Pistons

- Remove the circlip **(a)** from piston.

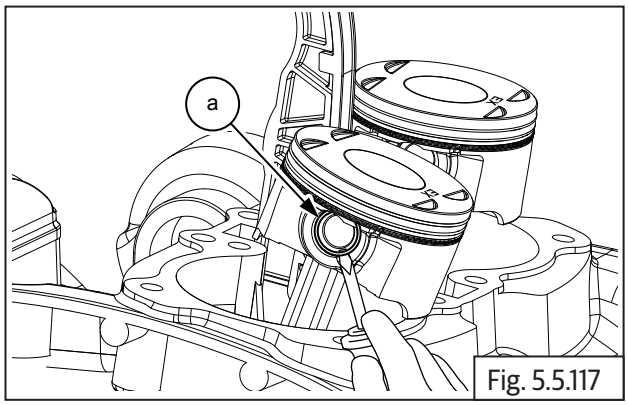

Fig. 5.5.117

	Screw driver

- Gently push out the gudgeon pin **(a)** to release the piston.

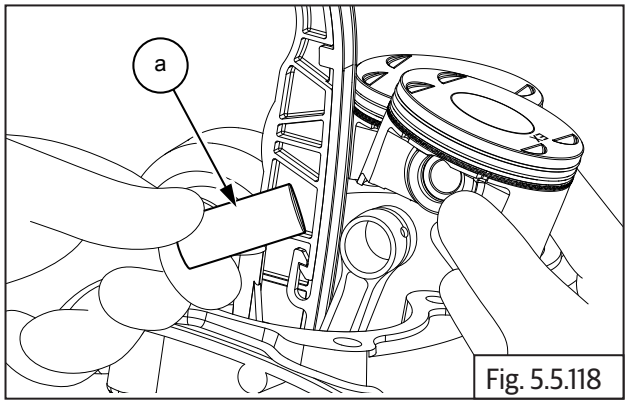

Fig. 5.5.118

- Repeat the procedure for other piston.

5.5.36. Oil Pressure Switch

- Loosen and remove pressure switch **(a)** along with washers **(b)** from bottom of the crankcase RH.

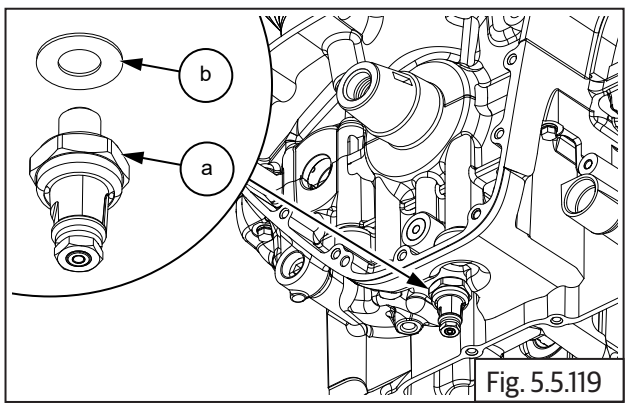

Fig. 5.5.119

	21 mm Socket with Ratchet

5.5.37. Oil Pan

- Support upper crankcase on suitable wedges such that the oil pan is facing upwards.
- Loosen and remove the 13 Nos. Hex bolts **(M6) (a)** in crisscross pattern from sump.

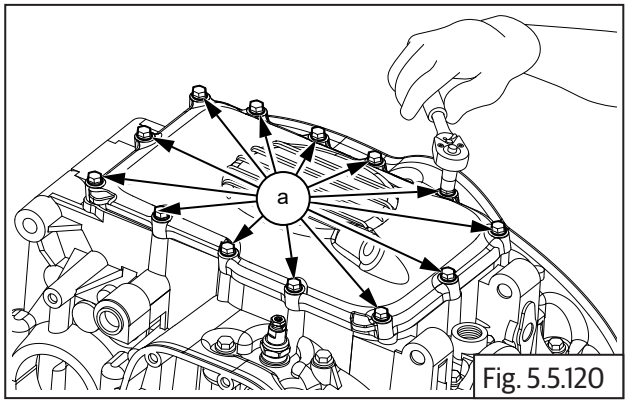

Fig. 5.5.120

	10 mm Socket with Ratchet

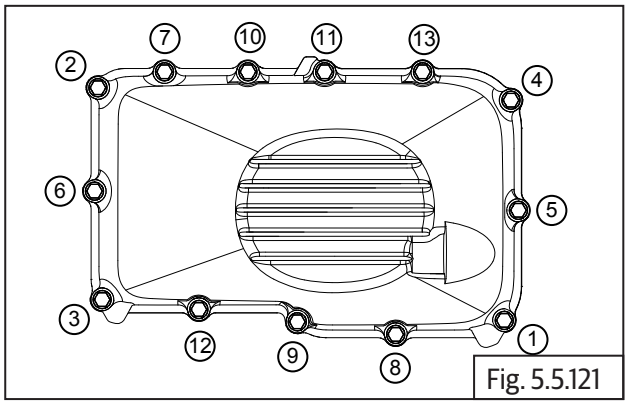

Fig. 5.5.121

- Remove sump cover **(a)** along with gasket **(b)** from bottom crankcase.

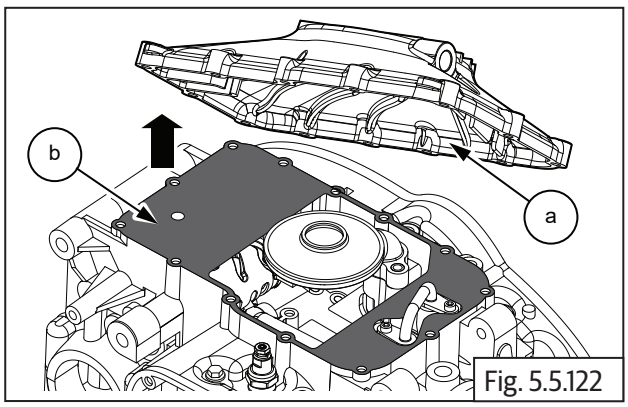

Fig. 5.5.122

5.5.38. Oil Strainer

- Loosen and remove 2 Nos. Hex flange head bolts **(M6) (a)** to remove oil strainer **(b)** along with O-ring **(c)**.

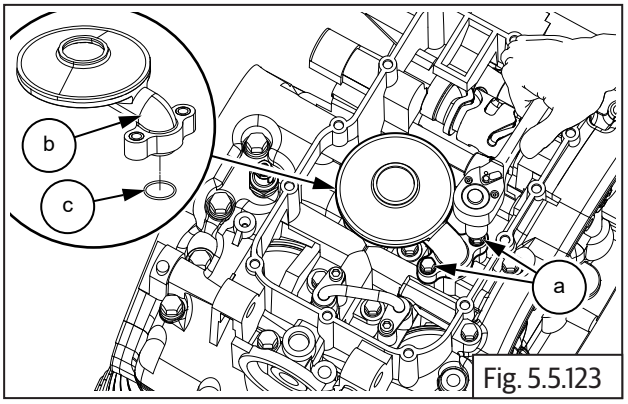

Fig. 5.5.123

	10 mm Socket with Ratchet

⚠ CAUTION

Do not reuse O-ring. Always use new O-ring during installation.

5.5.39. Oil Bypass

- Loosen and remove pan head screw **(M6) (a)** to remove bypass **(b)** from crankcase.

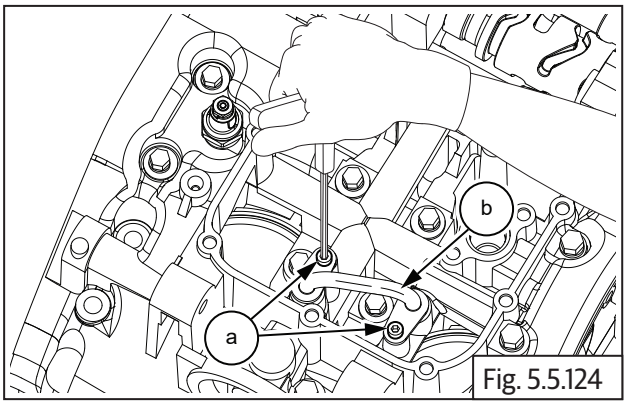

Fig. 5.5.124

	5 mm Allen key

5.5.40. Crankcase Fasteners

Fasteners on Upper Crankcase

Description	Quantity
M8 x 1.25 x 80	3
M8 x 1.25 x 105	2
M6 x 1.25 x 35	1
M8 x 1.25 x 45	1

- Support crankcase assembly on suitable wedges such that the fasteners on the upper crankcase can be removed.
- Loosen and remove 2 Nos. Hex flange bolts **M8 X 1.25 X 105 (a)** near oil filler hole on RH side (clutch side) of upper crankcase.

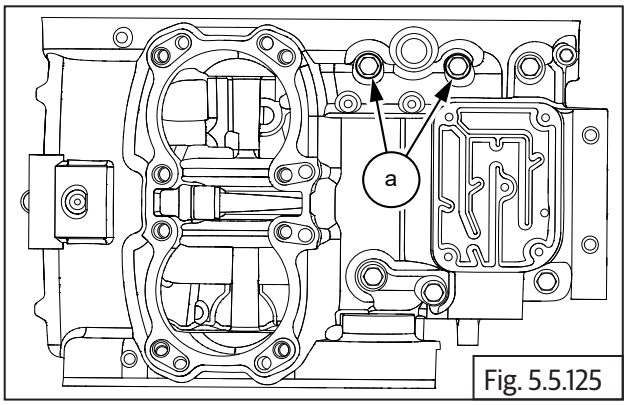

Fig. 5.5.125

	13 mm Socket with Ratchet

- Loosen and remove 1 No. Hex flange bolt **M8 X 1.25 X 80 (a)** near breather box housing on RH side (clutch side) of upper crankcase.

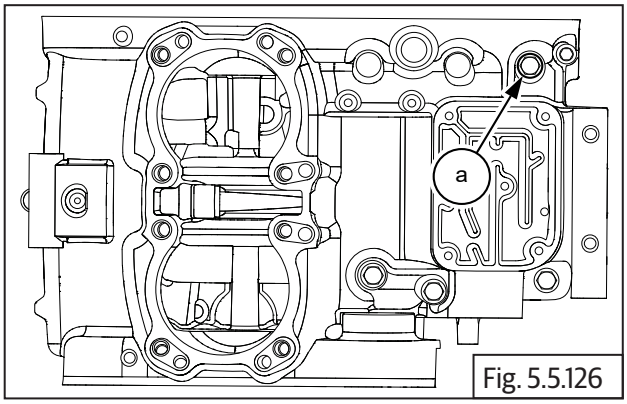

Fig. 5.5.126

	13 mm Socket with Ratchet

- Loosen and remove 1 No. Hex flange bolt **M6 X 1 X 35 (a)** from the rear RH side (clutch side) of upper crankcase.

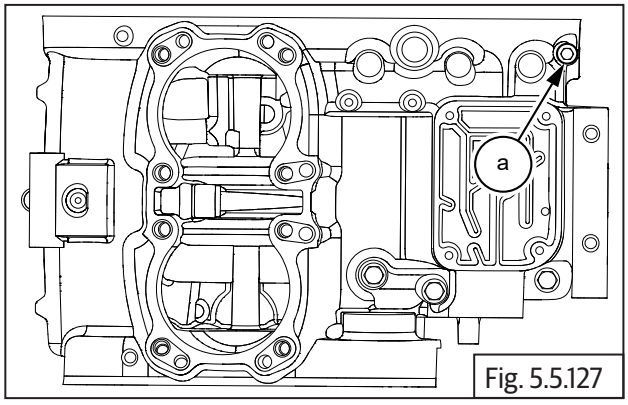

Fig. 5.5.127

	8 mm Socket with Ratchet

- Loosen and remove 1 No. Hex flange bolt **M8 X 1.25 X 45 (a)** from starter motor recess on LH side (magneto side) of upper crankcase.

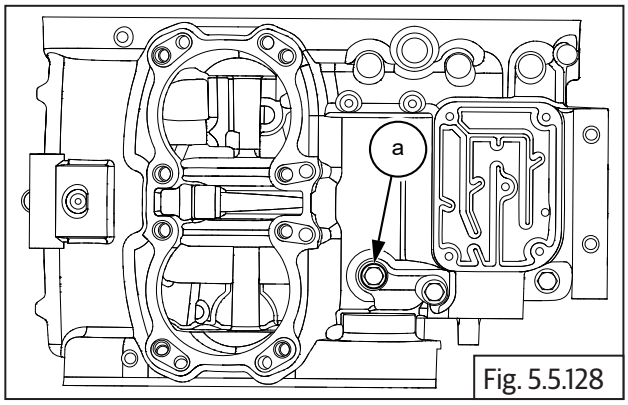

Fig. 5.5.128

	13 mm Socket with Ratchet

- Loosen and remove 2 Nos. Hex flange bolt **M8 X 1.25 X 80 (a)** (1 each from starter motor recess and FD sprocket spigot area) on LH side (magneto side) of upper crankcase.

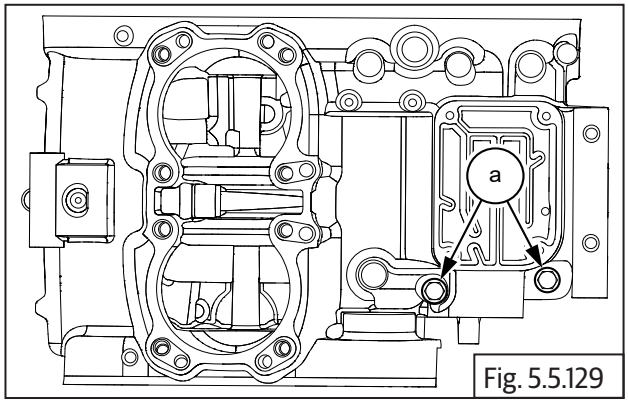

Fig. 5.5.129

	13 mm Socket with Ratchet

Fasteners on Lower Crankcase

Description	Quantity
M6 x 1.25 x 35	8
M8 x 1.25 x 80	9
M8 x 1.25 x 120	5
M6 x 1.25 x 85	1
M6 x 1.25 x 55	1
M8 x 1.25 x 150	2

- Gently invert crankcase assembly such that the upper crankcase is resting firmly on suitable wedges and the fasteners from lower crankcase can be removed.
- Loosen and remove 5 Nos. Hex flange bolts **M6 X 1 X 35 (a)** from the front end of lower crankcase.

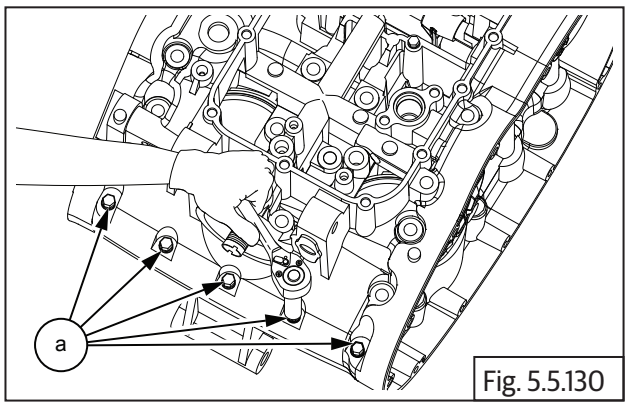

Fig. 5.5.130

	8 mm Socket with Ratchet

- Loosen and remove 3 Nos. Hex flange bolts **M6 X 1 X 35 (a)** from the rear end of lower crankcase.

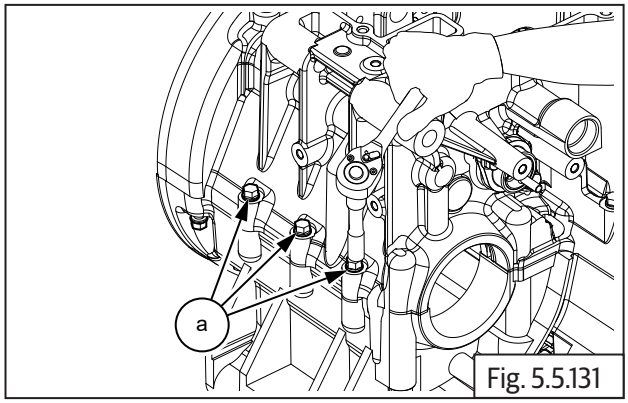

Fig. 5.5.131

	8 mm Socket with Ratchet

- Loosen and remove 6 Nos. Hex flange bolts **M8 X 1.25 X 80 (a)** in crisscross pattern from the centre of lower crankcase inside oil sump area.

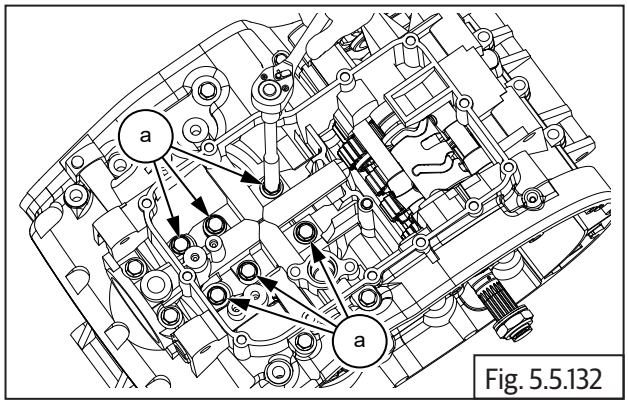

Fig. 5.5.132

	13 mm Socket with Ratchet

- Loosen and remove 2 Nos. Hex flange bolts **M8 X 1.25 X 120 (a)** from oil filter element mounting area in the lower crankcase front side.

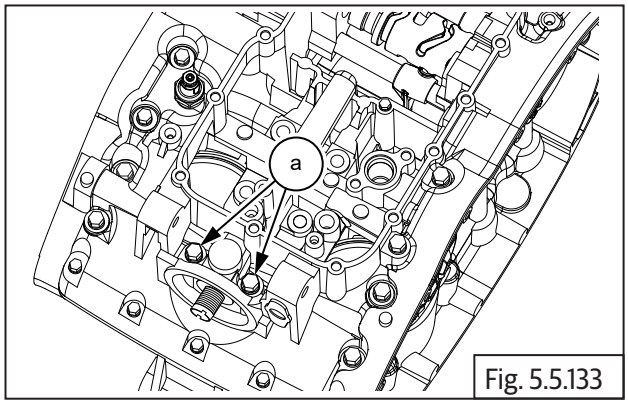

Fig. 5.5.133

	13 mm Socket with Ratchet

- Loosen and remove 1 No. Hex flange head bolt **M6 X 1 X 85 (a)** from the centre of lower crankcase inside oil sump area.

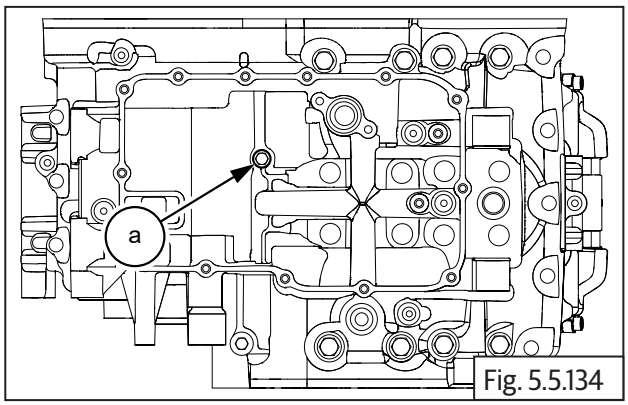

Fig. 5.5.134

	8 mm Socket with Ratchet

- Loosen and remove 1 No. Hex flange head bolt **M6 X 1 X 55 (a)** from the lower crankcase LH side (Magneto side).

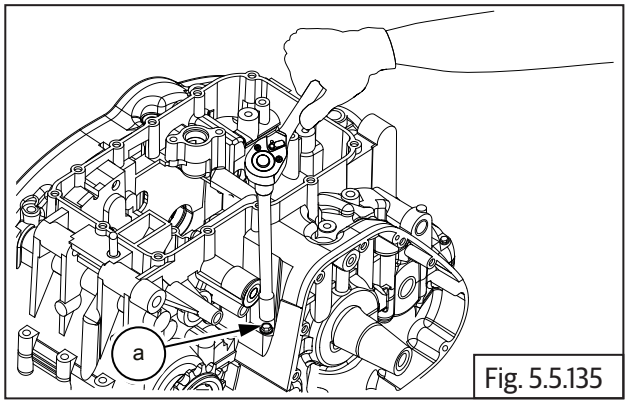

Fig. 5.5.135

	8 mm Socket with Ratchet

- Loosen and remove 2 Nos. Hex flange bolts **M8 X 1.25 X 150 (a)** from the lower crankcase LH side (Magneto side).

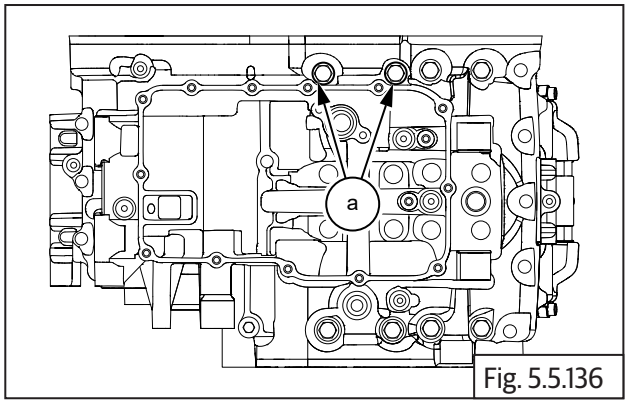

Fig. 5.5.136

	13 mm Socket with Ratchet

- Loosen and remove 1 No. Hex flange bolt **M8 X 1.25 X 120 (a)** from the lower crankcase LH side (Magneto side).

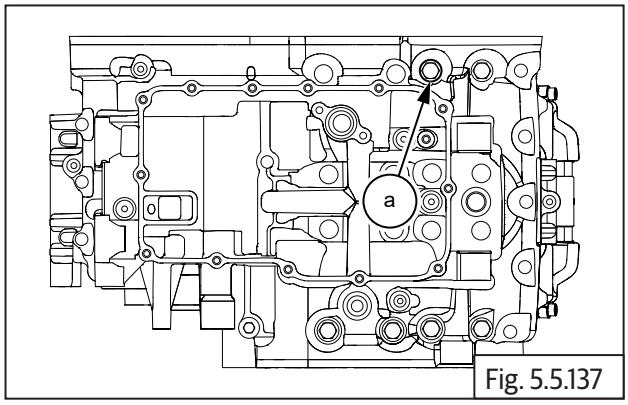

Fig. 5.5.137

	13 mm Socket with Ratchet

- Loosen and remove 1 No. Hex flange bolt **M8 X 1.25 X 80 (a)** from the lower crankcase LH side (Magneto side).

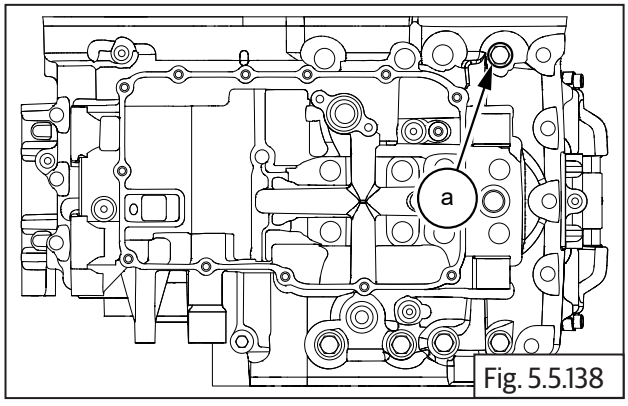

Fig. 5.5.138

	13 mm Socket with Ratchet

- Loosen and remove 2 Nos. Hex flange bolts **M8 X 1.25 X 120 (a)** from the lower crankcase RH side (clutch side).

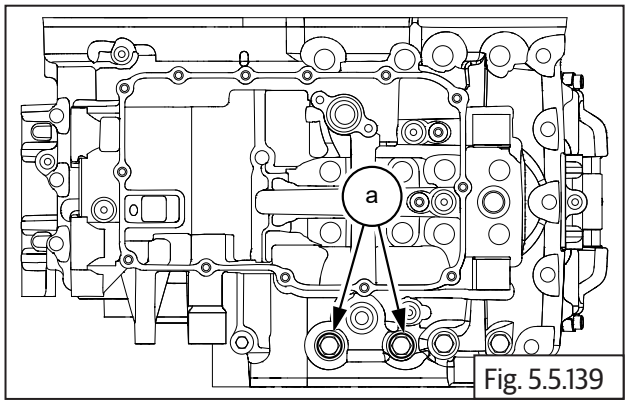

Fig. 5.5.139

	13 mm Socket with Ratchet

- Loosen and remove 2 Nos. Hex flange bolts **M8 X 1.25 X 80 (a)** from the lower crankcase RH side (clutch side).

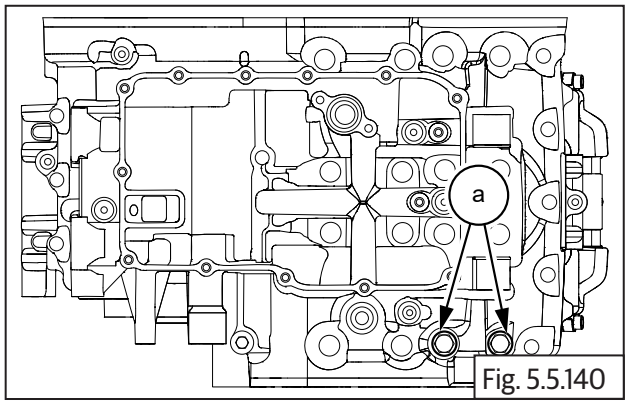

Fig. 5.5.140

	13 mm Socket with Ratchet

5.5.41. Splitting Crankcase

- Ensure the upper crankcase is supported firmly on suitable wedges with the lower crankcase facing upwards.
- Gently separate the lower crankcase from the upper crankcase by slightly tapping on the tabs **(a)** provided in lower crankcase, to release from the dowels and sealing gasket material.

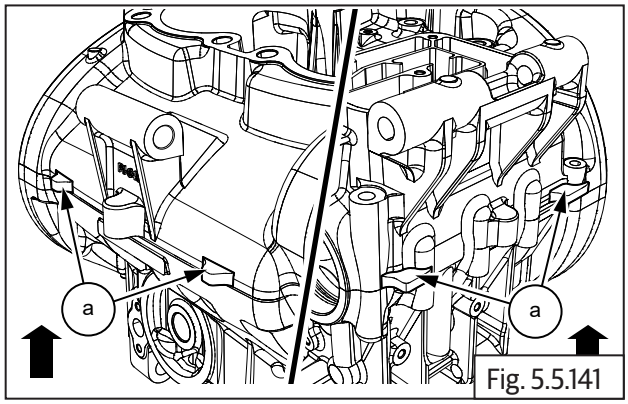

Fig. 5.5.141

- Remove lower crankcase along with the gear selector drum, from the upper crankcase.

⚠ CAUTION

Ensure all the mounting fasteners on the lower and upper crankcase have been removed.

Ensure the gear shift forks are not jammed in the grooves in the gears.

Ensure the dowels are removed from the upper and lower crankcases.

5.5.42. Balancer Shaft

- Gently lift and remove balancer shaft **(a)** from upper crankcase **(b)**.

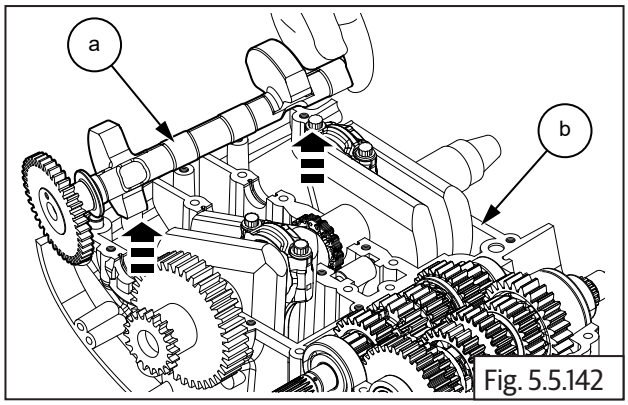

Fig. 5.5.142

5.5.43. Timing Chain Tensioner Pad

- Gently pull out timing chain tensioner pad **(a)** from crankcase.

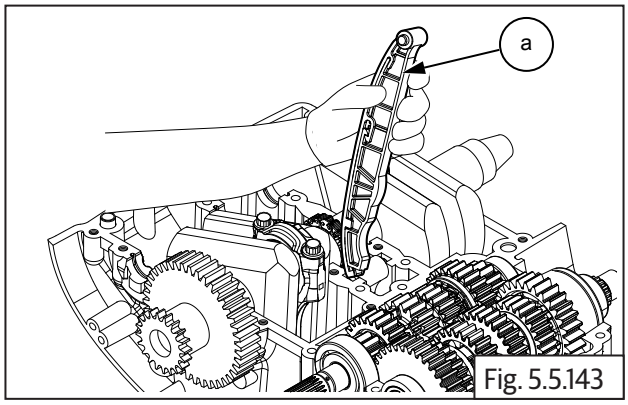

Fig. 5.5.143

5.5.44. Connecting Rod

- Loosen and remove 2 Nos. bi-hexagonal bolts **(M9) (a)** to disconnect connecting rod big end **(b)** from crankshaft **(c)**.

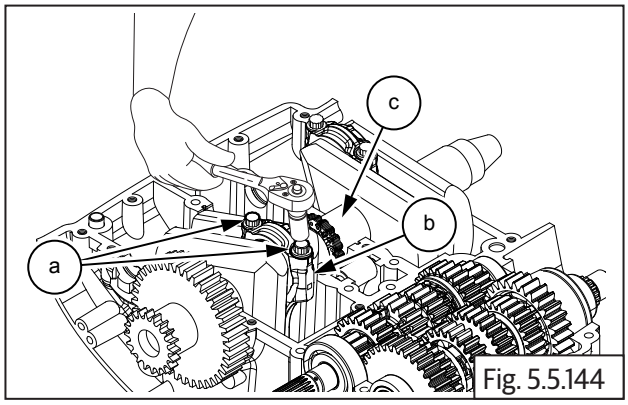

Fig. 5.5.144

	13 mm Bi-Hexgonal Socket with Ratchet

- Split the connecting rod's big end.

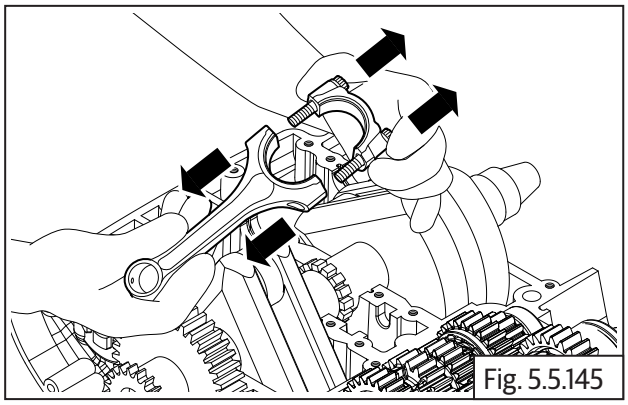
Fig. 5.5.145

- Repeat same procedure for other connecting rod.

NOTE
• *Make sure to mark connecting rod suitably to retain original position during installation.*

5.5.45. Crankshaft Assembly

⚠ **CAUTION**
Crankcase and connecting rod bolts are one time use only.

- Gently lift and remove crankshaft assembly **(a)** from crankcase along with the cam chain **(b)**.

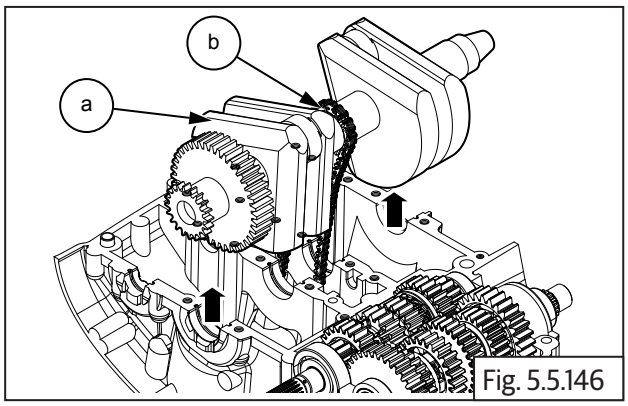

Fig. 5.5.146

- Release cam chain from the sprocket on the center of the crankshaft and remove.

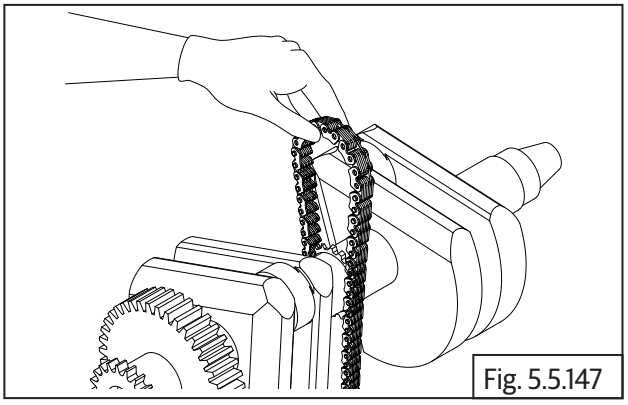
Fig. 5.5.147

5.5.46. Countershaft

- Gently lift to remove transmission countershaft with gear assembly **(a)** from upper crankcase **(b)**.

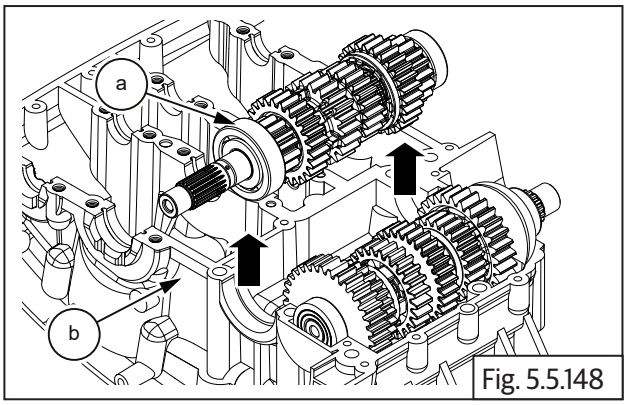

Fig. 5.5.148

- Remove the bearing **(a)** from the countershaft smaller end **(b)**.

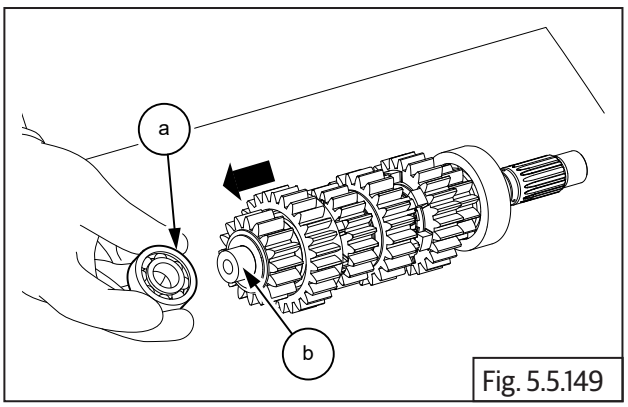

Fig. 5.5.149

- Remove thrust washer **(a)** from countershaft **(b)**.

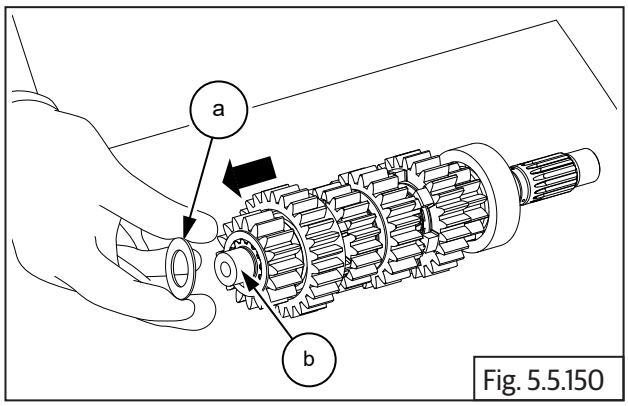

Fig. 5.5.150

- Remove the 2nd gear (16 teeth) **(a)** from the countershaft **(b)**.

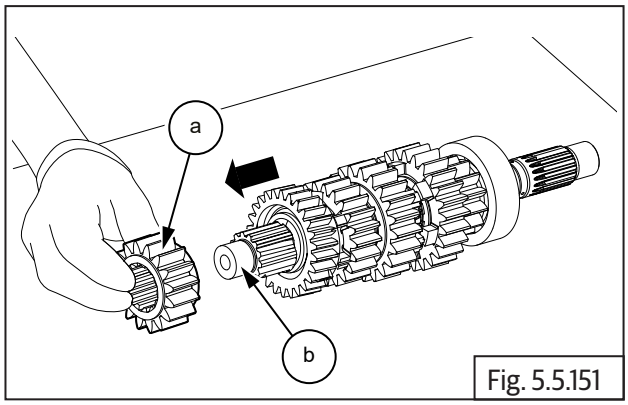

Fig. 5.5.151

- Remove the 6th gear (26 teeth) **(a)** from the countershaft **(b)**.

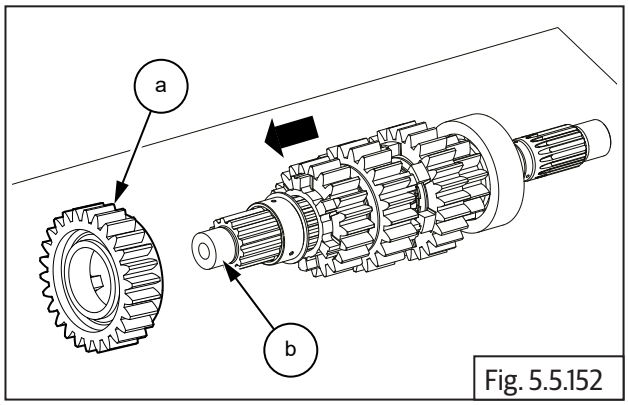

Fig. 5.5.152

- Remove plain bush **(a)** from the countershaft **(b)**.

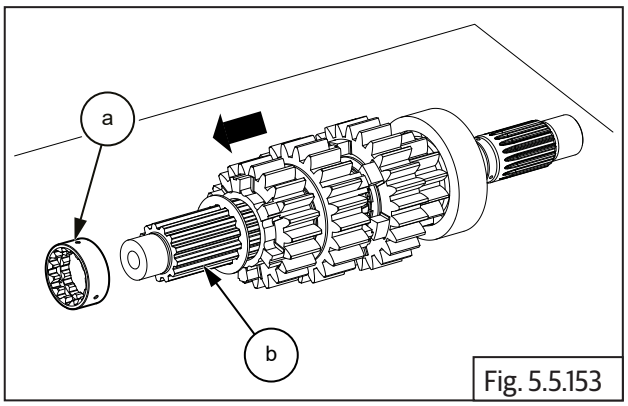

Fig. 5.5.153

- Remove the splined washer **(a)** from the countershaft **(b)**.

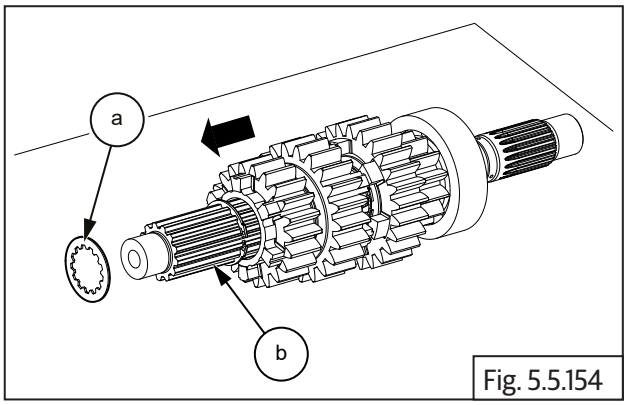

Fig. 5.5.154

- Remove the outer circlip **(a)** from the countershaft **(b)**.

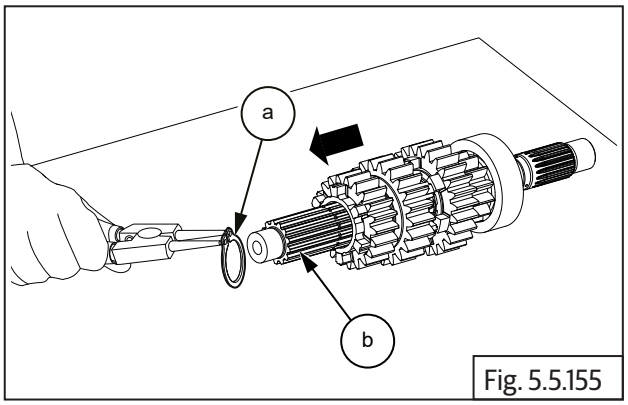

Fig. 5.5.155

	Circlip plier

- Remove the 3rd and 4th double gears **(a)** from the countershaft **(b)**.

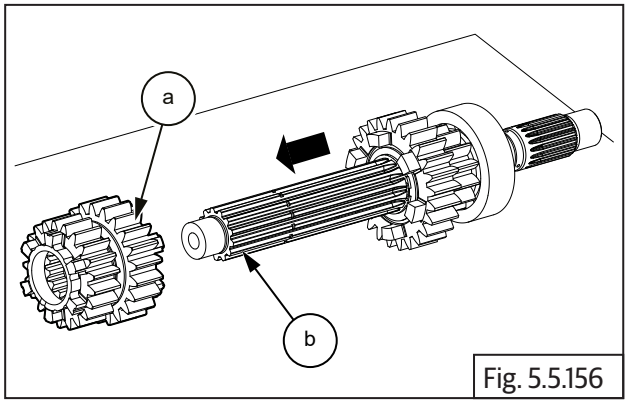

Fig. 5.5.156

- Remove the inner circlip **(a)** from the countershaft **(b)**.

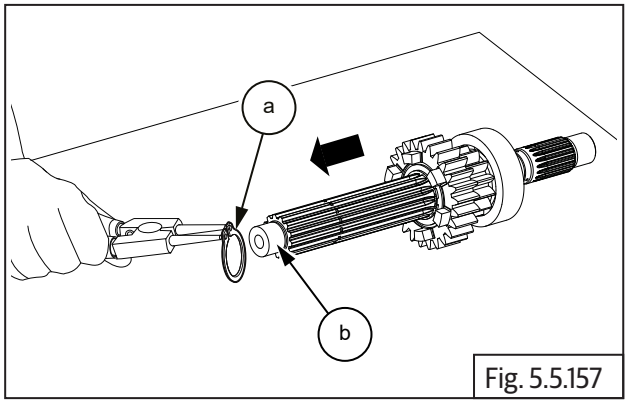

Fig. 5.5.157

	Circlip plier

- Remove the thrust washer **(a)** from countershaft **(b).**

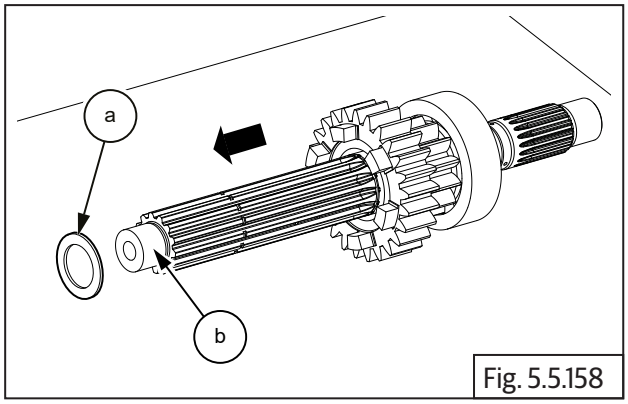

Fig. 5.5.158

- Remove the plain bush **(a)** from the countershaft **(b)**.

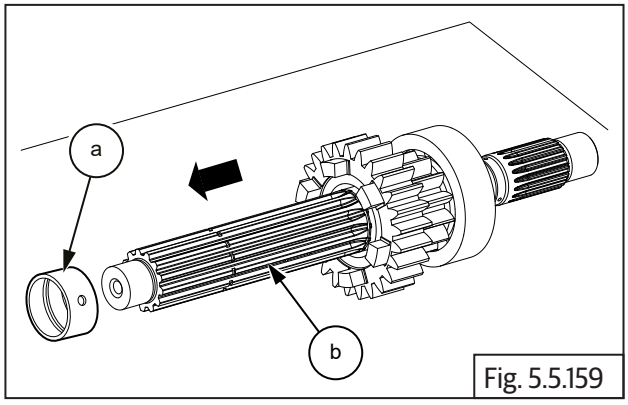

Fig. 5.5.159

- Remove the 5th gear (24 teeth) **(a)** from the countershaft **(b)**.

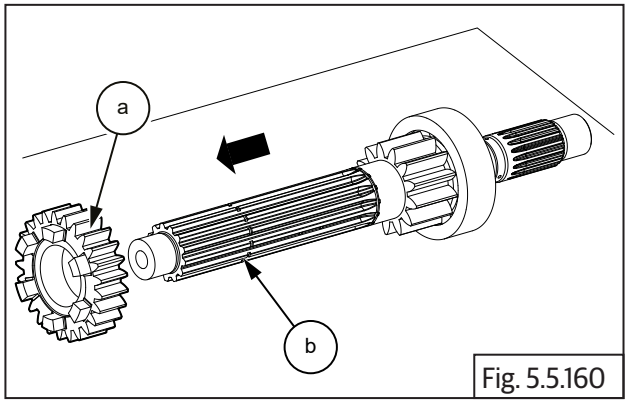

Fig. 5.5.160

5.5.47. Driveshaft

- Gently lift and remove driveshaft with gear assembly **(a)** from upper crankcase **(b)**.

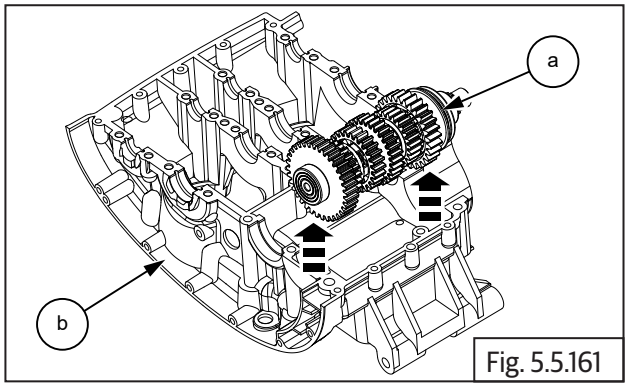

Fig. 5.5.161

- Remove bearing **(a)** from non splined end of driveshaft **(b)**.

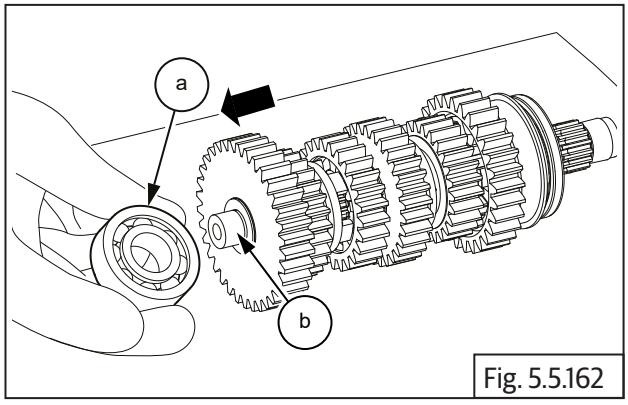

Fig. 5.5.162

- Remove thrust washer **(a)** from non splined end of driveshaft **(b)**.

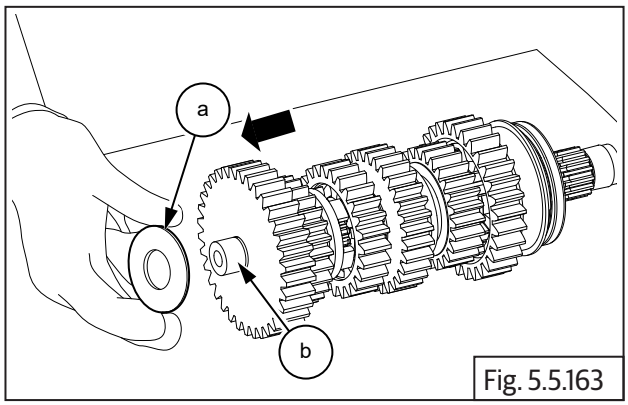

Fig. 5.5.163

- Remove 1st gear **(a)** from non splined end end of driveshaft **(b)**.

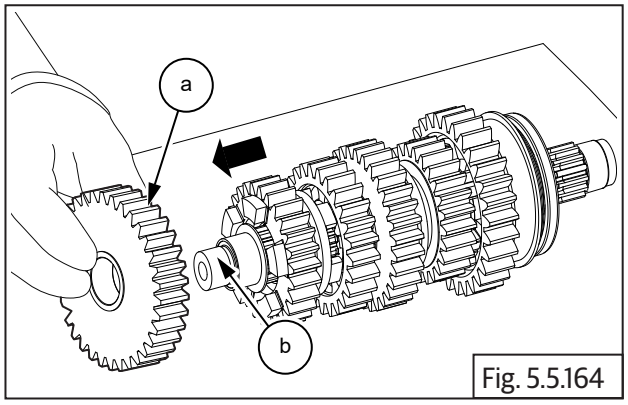

Fig. 5.5.164

- Remove splined bush **(a)** from driveshaft **(b)**.

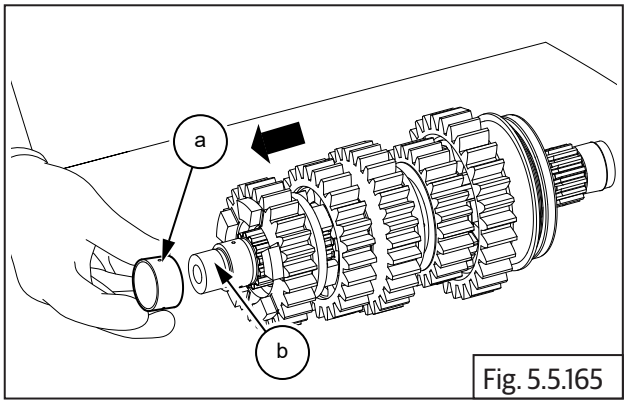

Fig. 5.5.165

- Remove thrust washer **(a)** from driveshaft **(b)**.

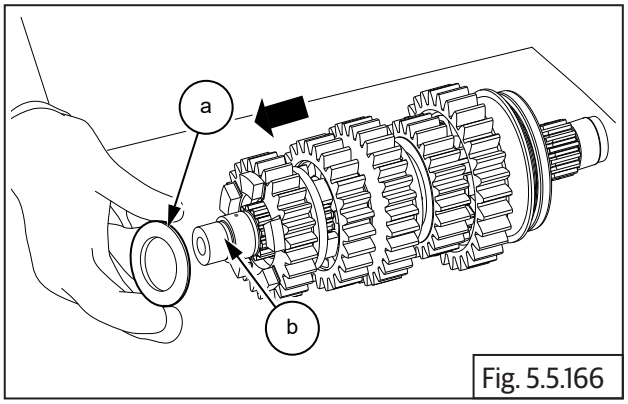

Fig. 5.5.166

- Remove 5th gear **(a)** from the driveshaft **(b)**.

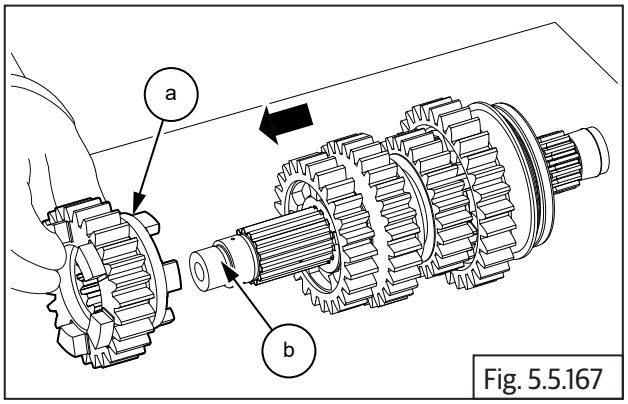

Fig. 5.5.167

- Remove 4th circlip **(a)** from groove in the driveshaft **(b)**.

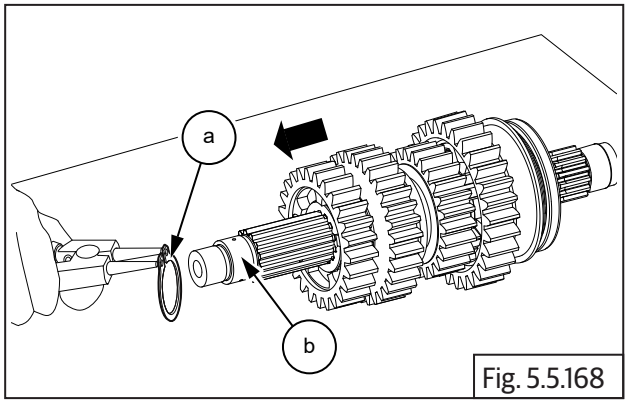

Fig. 5.5.168

	Circlip plier

- Remove splined thrust washer **(a)** from driveshaft **(b)**.

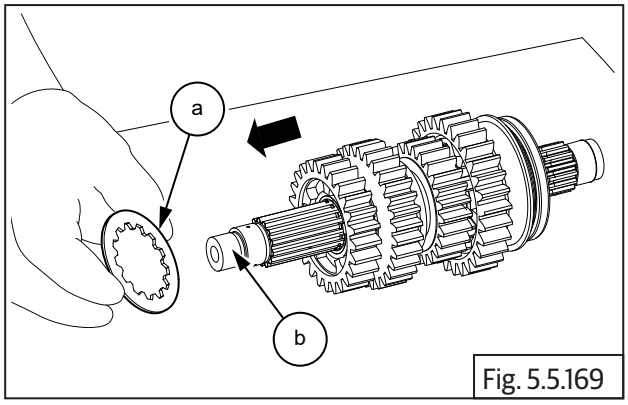

Fig. 5.5.169

- Remove 4th gear **(a)** from driveshaft **(b)**.

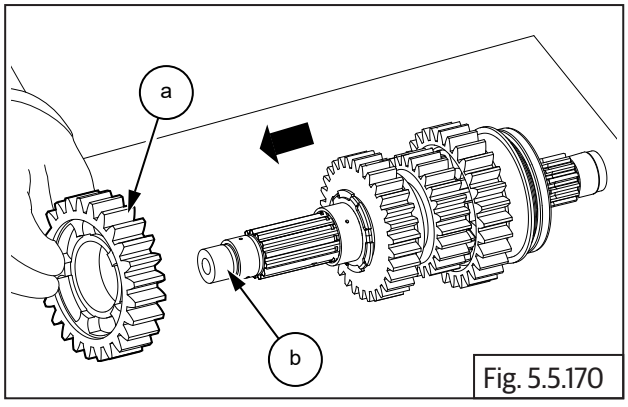

Fig. 5.5.170

- Remove splined bush **(a)** driveshaft **(b)**.

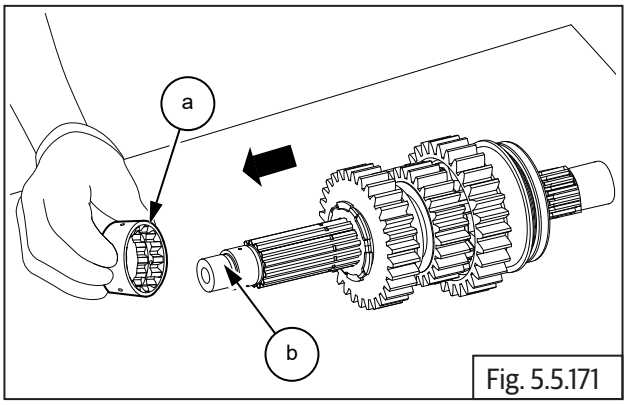

Fig. 5.5.171

- Remove the splined lock washer **(a)** from driveshaft **(b)**.

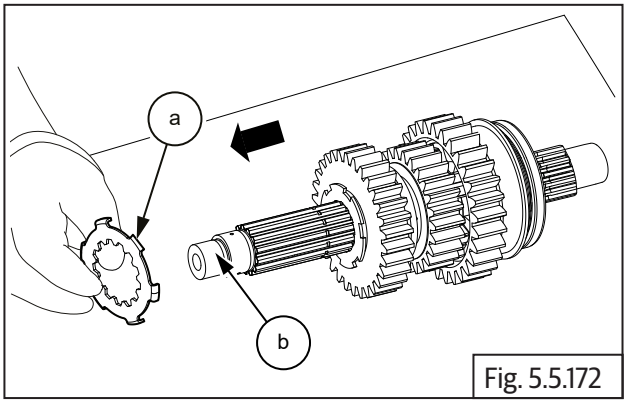

Fig. 5.5.172

- Rotate thrust washer **(a)** such that the inner splines aligned to the splines on the driveshaft and remove from driveshaft **(b)**.

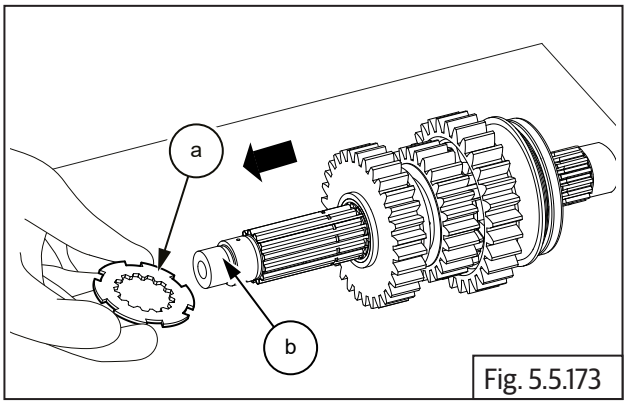

Fig. 5.5.173

- Remove 3rd gear **(a)** from driveshaft **(b)**.

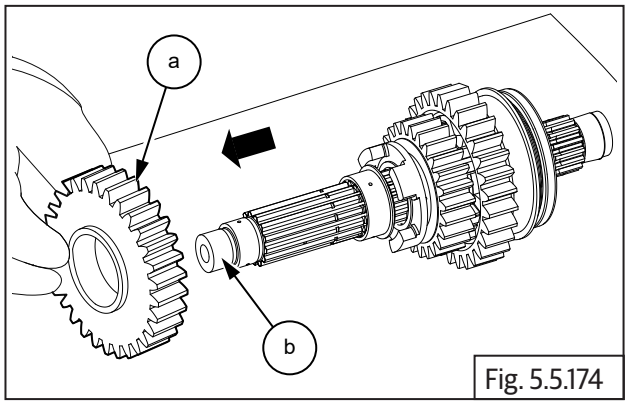

Fig. 5.5.174

- Remove splined bush **(a)** from driveshaft **(b)**.

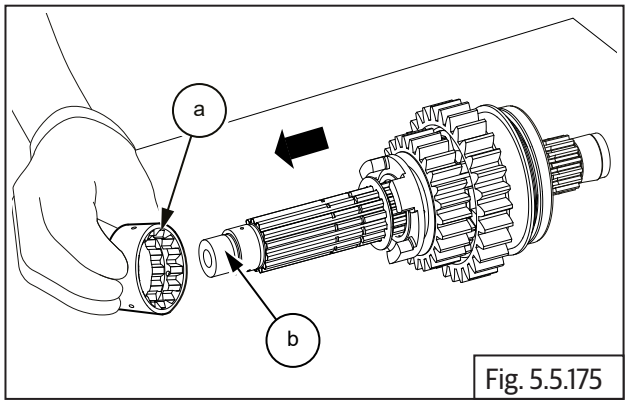

Fig. 5.5.175

- Remove splined thrust washer **(a)** driveshaft **(b)**.

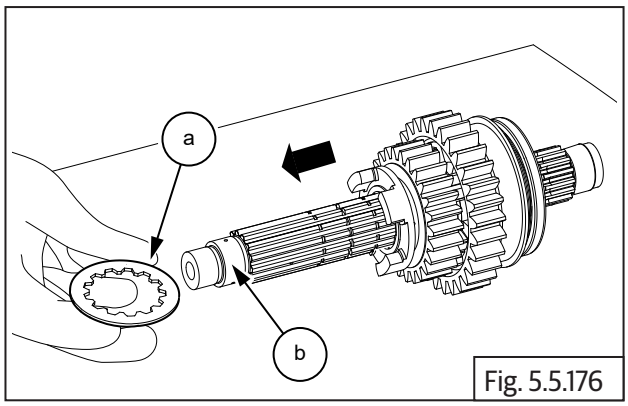

Fig. 5.5.176

- Remove 2nd circlip **(a)** from groove on driveshaft **(b)**.

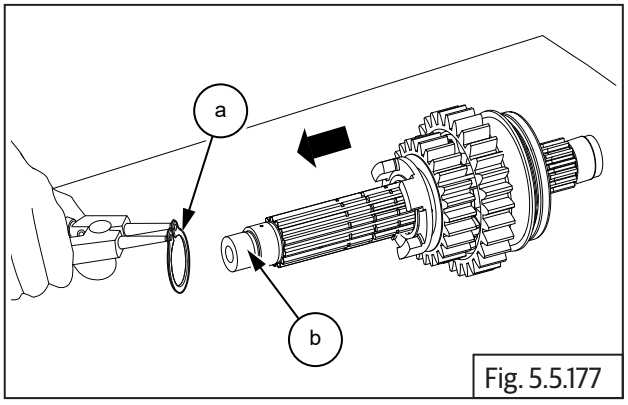

Fig. 5.5.177

	Circlip plier

- Remove 6th gear **(a)** from driveshaft **(b)**.

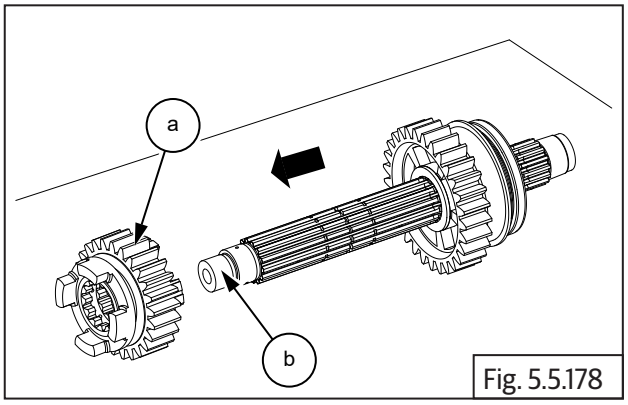

Fig. 5.5.178

- Remove 1st circlip **(a)** from groove on driveshaft **(b)**.

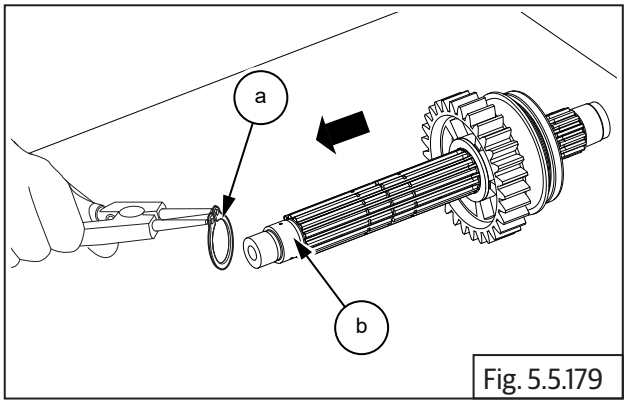

Fig. 5.5.179

	Circlip plier

- Remove collar bush **(a)** from driveshaft **(b)**.

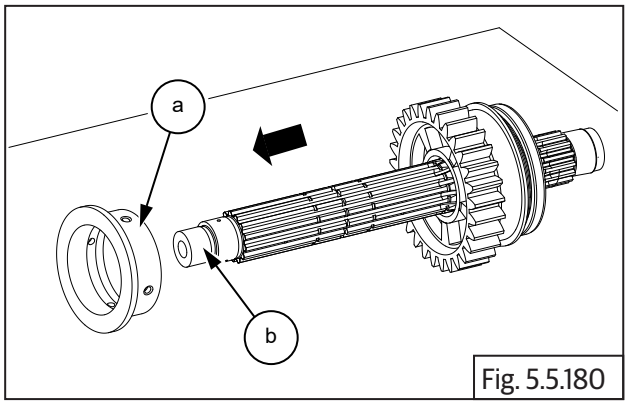

Fig. 5.5.180

- Remove the 2nd gear **(a)** from driveshaft **(b)**.

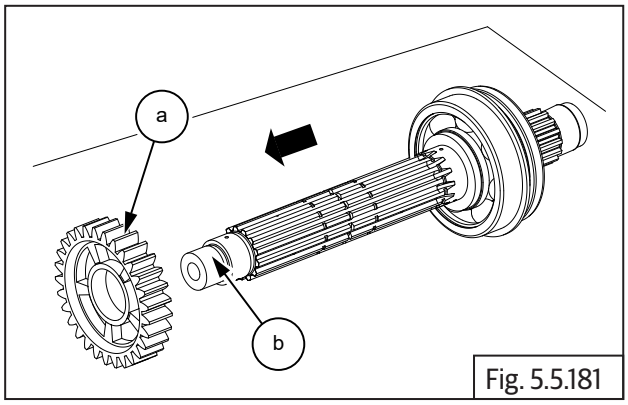

Fig. 5.5.181

- Gently tap and remove the bearing **(a)** from the driveshaft **(b)**.

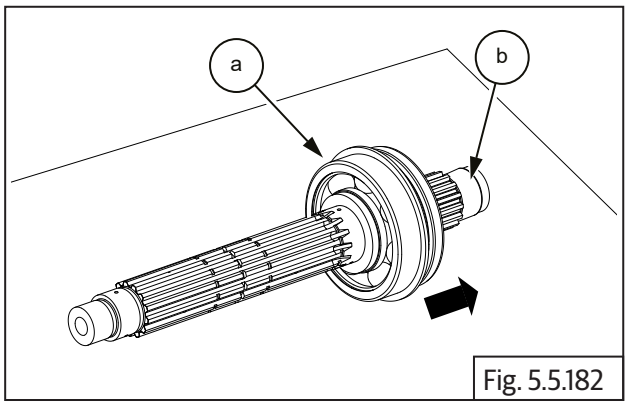

Fig. 5.5.182

5.5.48. Selector Fork and Spindles

- Support inner selector fork **(b)** and pullout spindle **(a)** from the RH side of lower crankcase **(c)**.

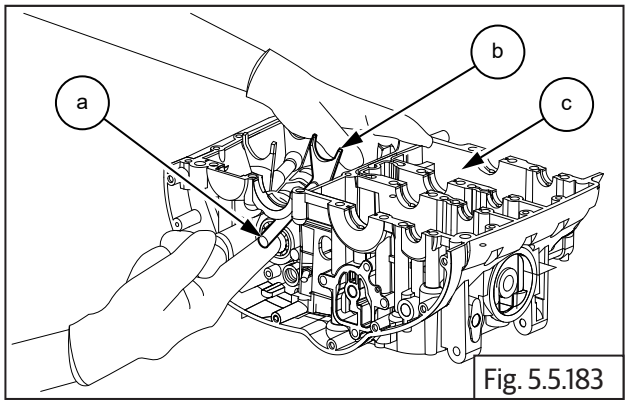

Fig. 5.5.183

- Support the 2 inner selector forks and pull out the spindle **(a)** from the RH side of lower crankcase **(b)**.

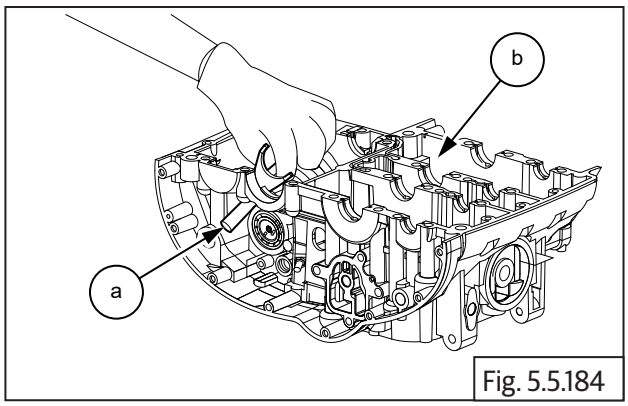

Fig. 5.5.184

5.5.49. Gear Shift Cam Drum

- Gently drive out gear shift cam drum **(a)** from the LH side of lower crankcase.

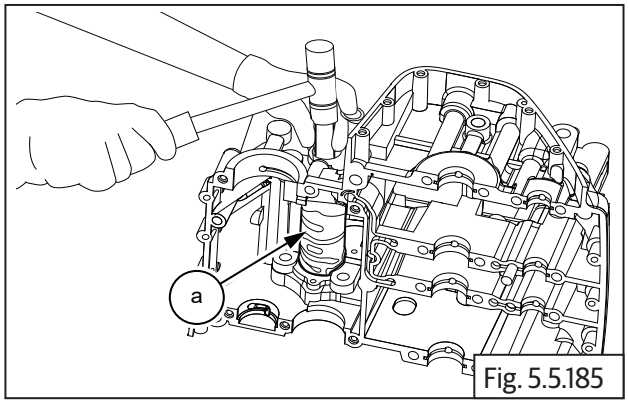

Fig. 5.5.185

	Mallet

ENGINE INSPECTION

CONTENTS PAGE

5.6 Engine Inspection 237

5.6.1 Cylinder Head 237

5.6.2 Cylinder Barrel 241

5.6.3 Crankcase 243

5.6.4 Clutch Components 245

5.6.5 Shifter Forks 246

5.6.6 Selector Drum 247

5.6.7 Magneto Cover 247

5.6.8 Clutch Cover 247

5.6 Engine Inspection

NOTE
• *Remove off carbon deposits by scraping gently.*
• *Use soft blunt objects to clean.*
• *Wash components with recommended solvents.*
• *Ensure area is clean and dry before inspection.*

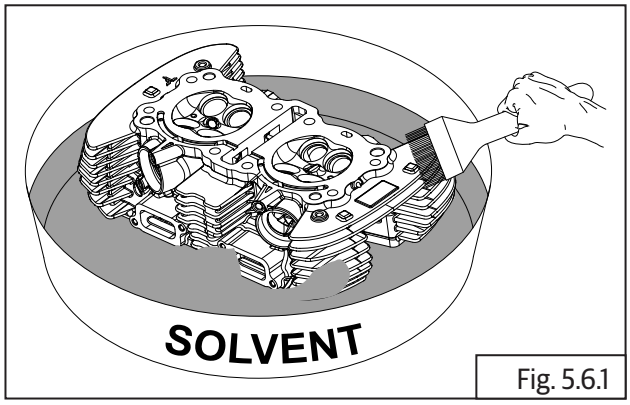

Fig. 5.6.1

5.6.1 Cylinder Head

Cylinder Head Inspection

- Inspect cylinder head carefully for any cracks, blow holes or damages – especially in the inlet and exhaust ports.
- Place thick straight edge across cylinder head gasket seating surface.
- Insert pointed feeler gauge of 0.01 mm thickness between straight edge and cylinder head.
- Inspect and ensure 4 locations **(a, b, c, d)** on cylinder head are at same level.

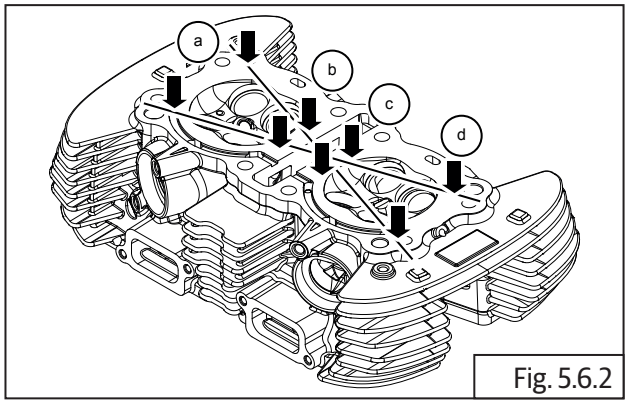

Fig. 5.6.2

- Ensure feeler enters properly at marked places.

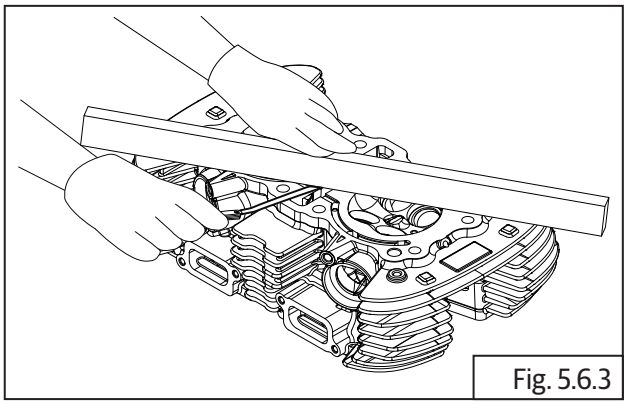
Fig. 5.6.3

	Thick straight edge and Feeler gauge

Service limit:	0.01 mm

Rocker Cover to Cylinder Head Seating Surface

- Place the thick straight edge across the rocker cover gasket seating surface.
- Insert pointed feeler gauge of 0.01 mm thickness between straight edge and cylinder head at the marked places.

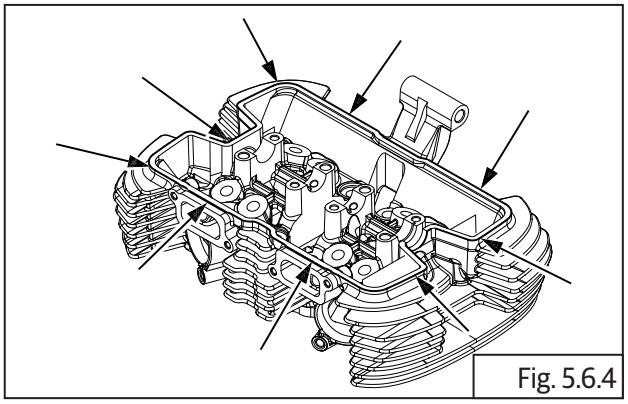
Fig. 5.6.4

- Ensure feeler enters properly at marked places.

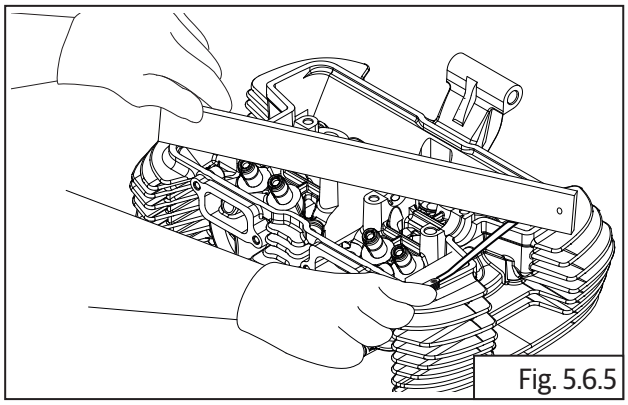

Fig. 5.6.5

	Thick straight edge and Feeler gauge

Service limit:	0.01 mm

Rocker Cover

- Place thick straight edge across the rocker cover.
- Insert pointed feeler gauge of 0.01 mm thickness between straight edge and rocker cover.
- Inspect and ensure 4 locations **(a, b, c, d)** on rocker cover are at same level.

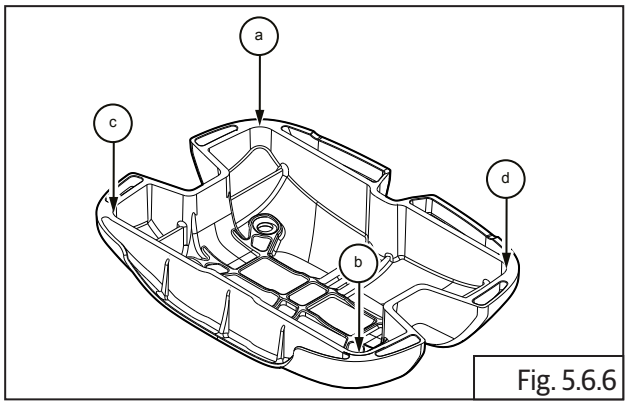

Fig. 5.6.6

	Thick straight edge and Feeler gauge

Service limit:	0.01 mm

Rocker Arm

- Inspect rollers **(a)** for any wear and/or sticky rotation. Replace if defective.
- Measure the inner diameter **(b)** of the rocker arm.

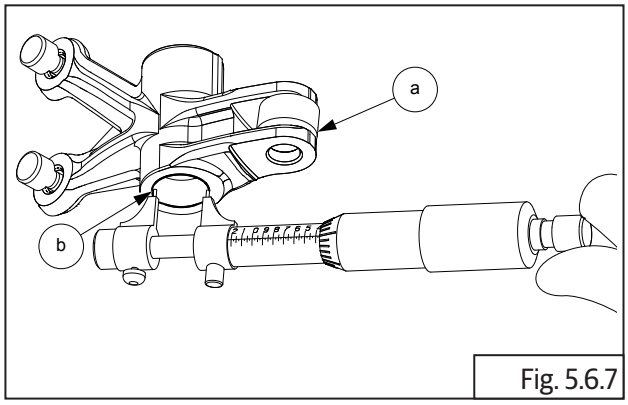

Fig. 5.6.7

	Inside micrometer

Minimum:	12.000 mm
Maximum:	12.018 mm
Service Limit:	0.018 mm

Rocker Arm Shaft

- Check rocker arm shaft for pitting, score marks, uneven wear or damage. Replace if defective.
- Measure the diameter of the rocker shaft **(a)** at the rocker arm working area.

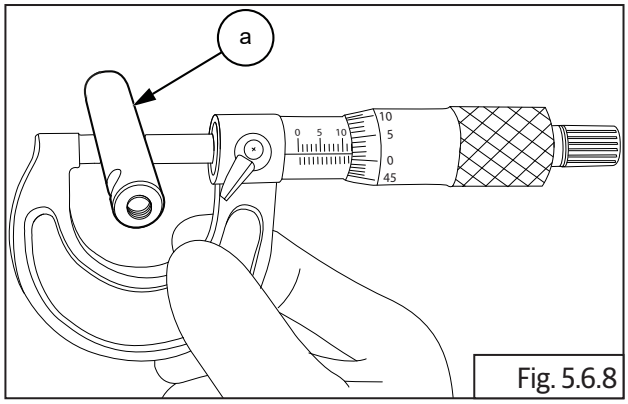

Fig. 5.6.8

	Micrometer

Minimum:	11.973 mm
Maximum:	11.984 mm
Service Limit:	0.011 mm

Tappet Adjusters

- Inspect "elephant foot" **(a)** for any wear and/or sticky rotation. Replace if defective.

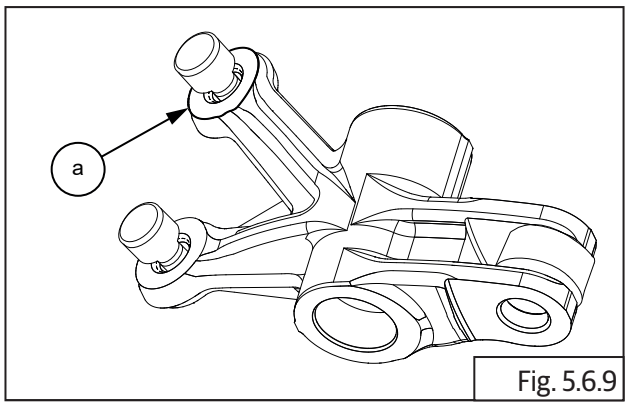

Fig. 5.6.9

Camshaft Run-out

- Inspect camshaft lobes for pitting, score marks, uneven wear or damage.
- Support the cam shaft on the 2 V-blocks **(a)**.
- Rotate the camshaft slowly and measure run-out with a dial gauge **(b)** at the machined place.

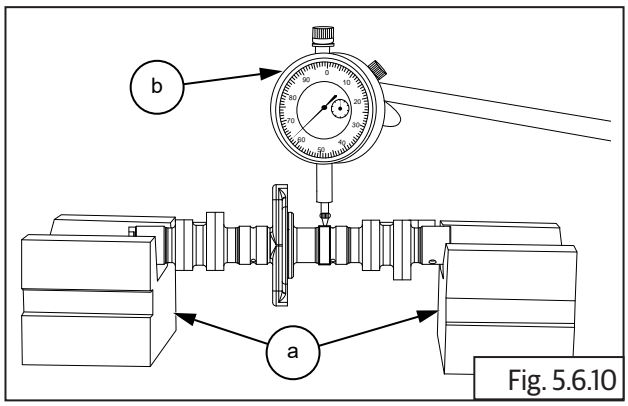

Fig. 5.6.10

	V-Blocks and Dial gauge

Service limit:	0.05 mm

Camshaft Journal OD

- Measure camshaft journal OD **(a)**.

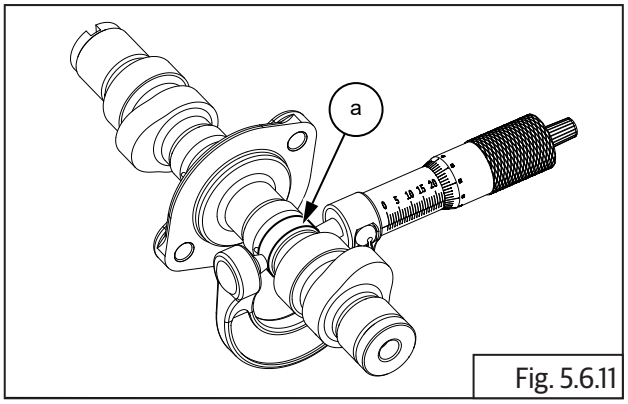

Fig. 5.6.11

	Micrometer

New minimum:	21.959 mm
Maximum:	21.980 mm
Service Limit:	0.0210 mm

Camshaft Lobe

- Inspect cam lobes for scoring, wear-out and scratches.
- Measure height of each cam lobe **(a)**.

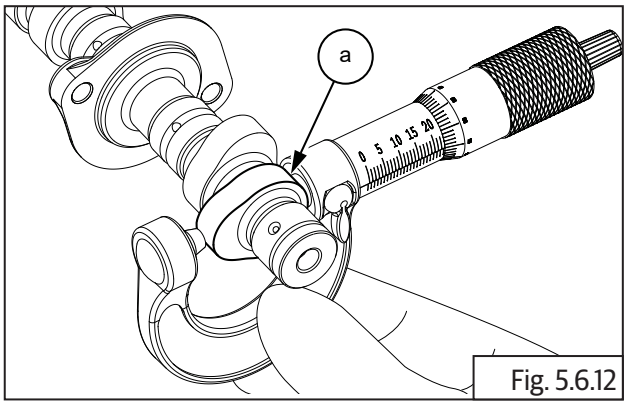

Fig. 5.6.12

	Micrometer

Service limit (Intake):	35.590 mm
Service limit (Exhaust):	35.628 mm

Valve Inspection.

- Check each valve for wear, burn or distortion at its face and stem end. Replace valve, if necessary.
- Check valve stem end face for pitting and wear.
- When it is worn out, replace the valve.

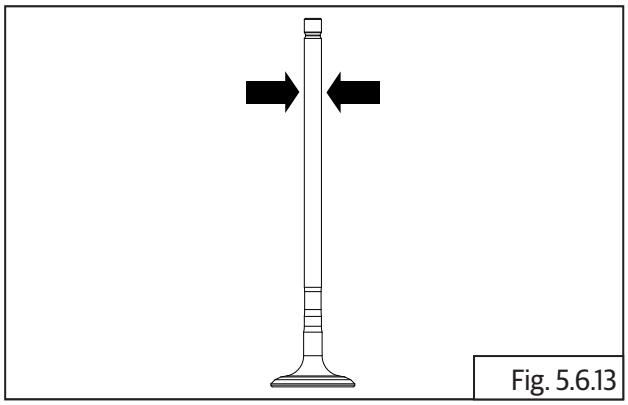

Fig. 5.6.13

Valve Guide ID (Inlet and Exhaust)

- Using micrometer and bore gauge, measure the ID of the valve guides at the top and bottom working area inside the guides.

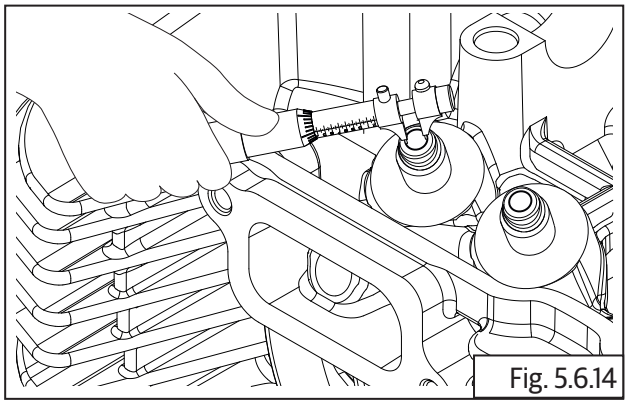

Fig. 5.6.14

	Micrometer and Bore gauge

Minimum:	5.000 mm
Maximum:	5.012 mm
Service Limit:	0.012 mm

Valve Spring (Inlet and Exhaust)

- Measure load on installed and working condition.

Installed Load	
Minimum:	154.100 N-m
Maximum:	174.100 N-m

Working Load	
Minimum:	431.300 N-m
Maximum:	461.300 N-m

Valve Stem OD (Inlet and Exhaust Valve)

- Measure diameter at marked places along the length of each stem.

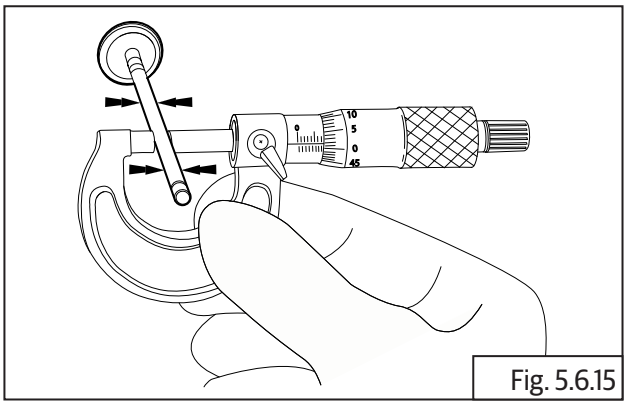

Fig. 5.6.15

	Micrometer

Inlet Valve Stem			
Measuring Point	**Min.**	**Max.**	**Service Limit**
Stem OD Top	4.250 mm	4.350 mm	0.100 mm
Stem OD middle	4.975 mm	4.990 mm	0.015 mm
Stem OD bottom	4.600 mm	4.800 mm	0.200 mm
Bend	0.010 mm		

Exhaust Valve Stem			
Measuring Point	**Min.**	**Max.**	**Service Limit**
Stem OD Top	4.250 mm	4.350 mm	0.100 mm
Stem OD middle	4.955 mm	4.970 mm	0.015 mm
Stem OD bottom	4.600 mm	4.800 mm	0.200 mm
Bend	0.010 mm		

5.6.2 Cylinder Barrel

Cylinder Barrel Bore ID

- Check cylinder bore to piston working area for scoring, seizure marks and/or excessive wear.
- Measure the cylinder bore at the top, middle and bottom at the rings working area using a bore gauge.
- Measure at both across and along the gudgeon pin axis.

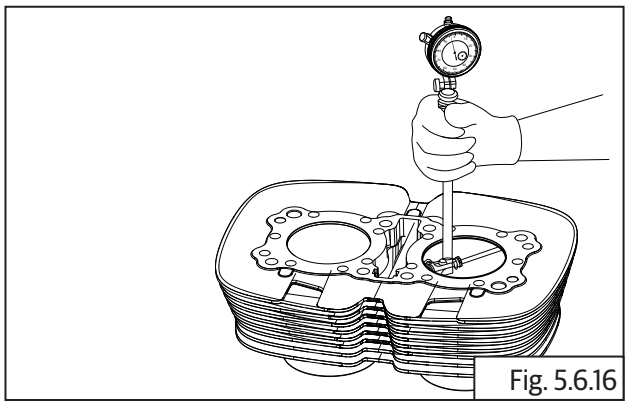

Fig. 5.6.16

	Bore gauge

Measuring points	Min.	Max.	Service Limit
(ID) Top of Piston working area	78.000 mm	78.030 mm	0.030 mm
(Ovality) Top of Piston working area	0.005 mm	0.008 mm	0.003 mm
(ID) Middle of Piston working area	78.000 mm	78.030 mm	0.030 mm
(Ovality) Middle of Piston working area	0.005 mm	0.008 mm	0.003 mm
(ID) Bottom of Piston working area	78.000 mm	78.030 mm	0.030 mm
(Ovality) Bottom of Piston working area	0.005 mm	0.008 mm	0.003 mm

Bore Taper Limit

- Measure the cylinder taper at three levels: Top **(a)**, Middle **(b)**, and Bottom **(c)** in the X and Y axis.

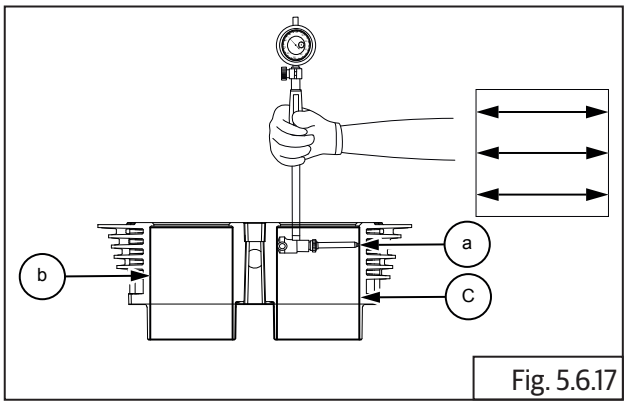

Fig. 5.6.17

	Bore gauge

Taper Limit:	0.050 mm
Out of Round Limit:	0.050 mm

Piston OD

- Measure and record both LH and RH cylinder piston OD at three levels - Top, Middle, and Bottom using Micrometer.

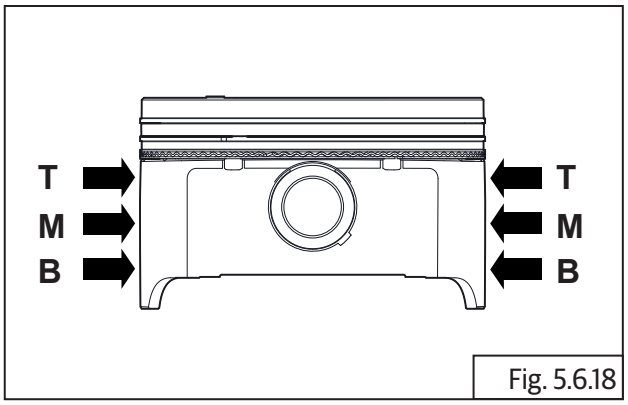

Fig. 5.6.18

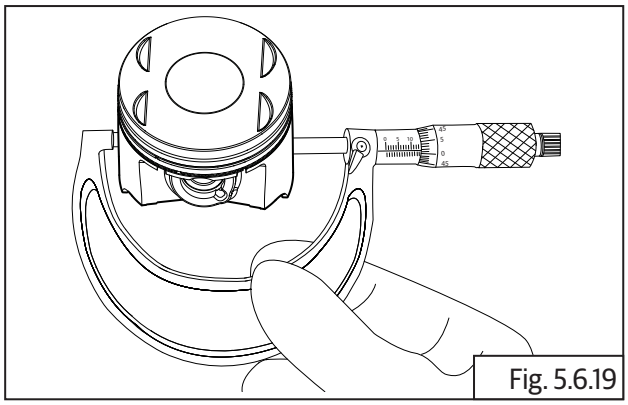

Fig. 5.6.19

	Micrometer

Minimum:	77.940 mm
Maximum:	77.970 mm
Service Limit	0.0300 mm

Piston Pin Bore ID

- Measure both LH and RH cylinder piston pin bore **(a)** inner diameter using inside micrometer **(b)**.

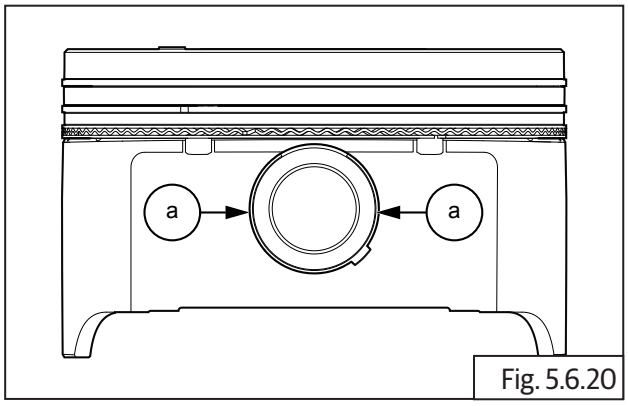

Fig. 5.6.20

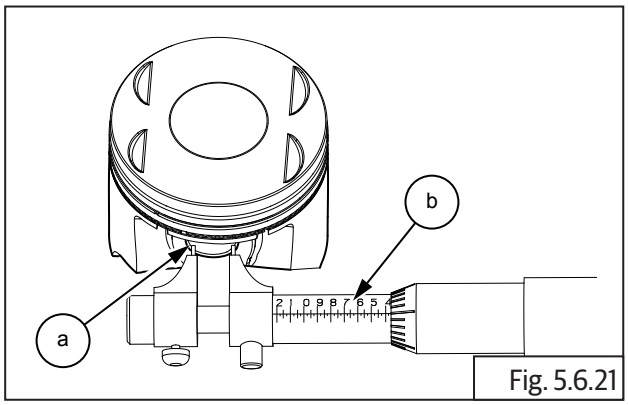

Fig. 5.6.21

	Inside micrometer

Minimum:	20.002 mm
Maximum:	20.007 mm
Service Limit	0.0050 mm

Piston Pin

- Measure the diameter of the piston pin **(a)**.

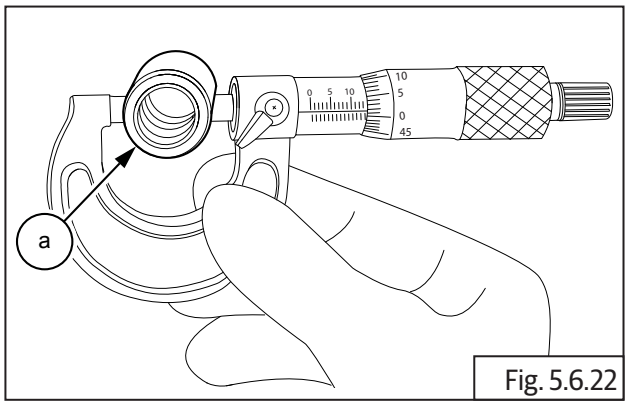

Fig. 5.6.22

	Micrometer

Minimum:	19.992 mm
Maximum:	19.997 mm
Service Limit	0.005 mm

Piston Ring End Gap

- Position the piston rings at their respective locations at the top of the cylinder barrel and ensure they are seated "squarely" inside the cylinder barrel.

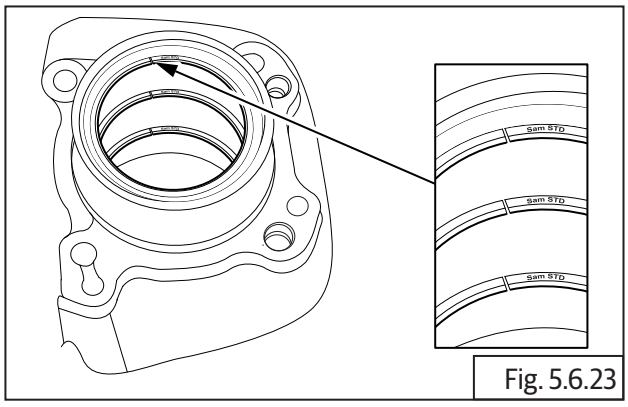

Fig. 5.6.23

- Measure piston rings end gap **(a)** using feeler gauge **(b)**.

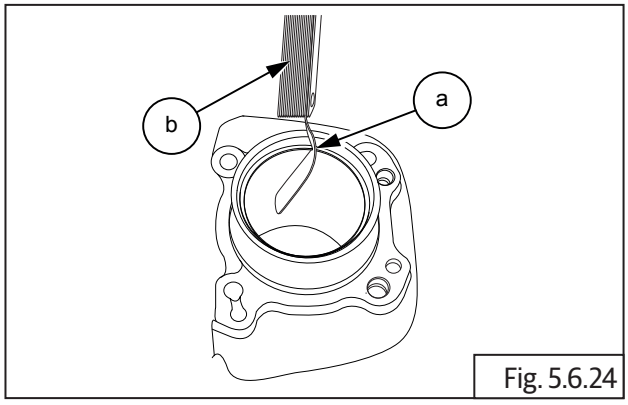

Fig. 5.6.24

	Feeler gauge

Measuring Points	Min.	Max.	Service Limit
Piston ring top 1	0.150 mm	0.300 mm	0.150 mm
Piston ring top 2	0.200 mm	0.400 mm	0.200 mm

5.6.3 Crankcase

Connecting Rod Small End ID

- Measure the connecting rod small end inner diameter **(a)**.

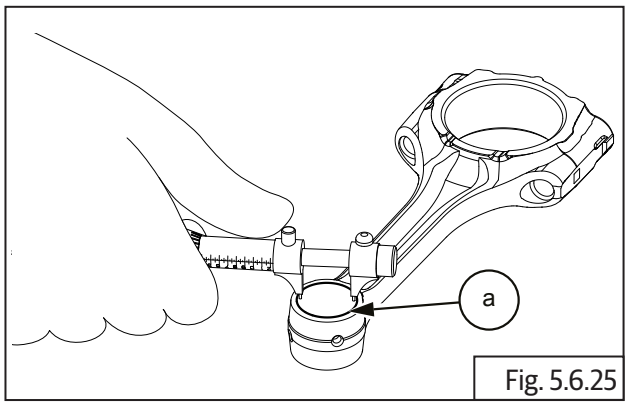

Fig. 5.6.25

	Inside Micrometer

Minimum:	20.006 mm
Maximum:	20.014 mm
Service Limit	0.008 mm

Connecting Rod Bend and Twist

- Support connecting rod suitably and firmly at the big end and measure bend/twist at the small end using a suitable scale.

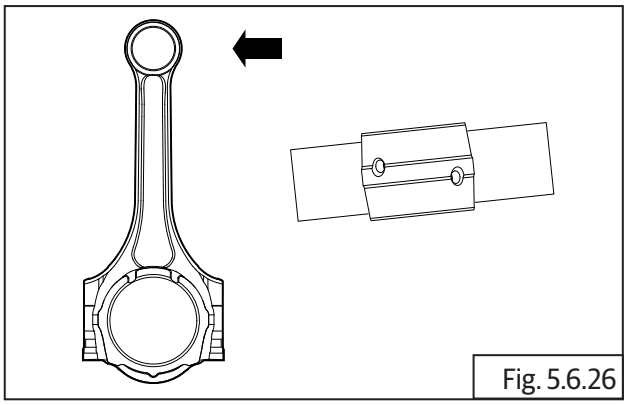
Fig. 5.6.26

Bend and Twist clearance:	0.050 mm

Connecting Rod Journal Bearing Clearance.

- Measure clearance between crankshaft journal connecting rod big end and bearings.

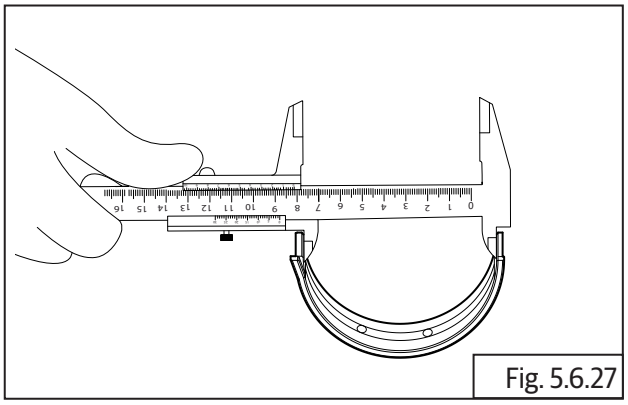
Fig. 5.6.27

	Vernier caliper

Minimum:	0.044 mm
Maximum:	0.055 mm
Service Limit	0.011 mm

Balancer Shaft Run-out

- Place the balancer shaft in V-blocks.
- Rotate the balancer shaft and measure run-out with a dial gauge at the machined surface **(a)** and **(b)**.

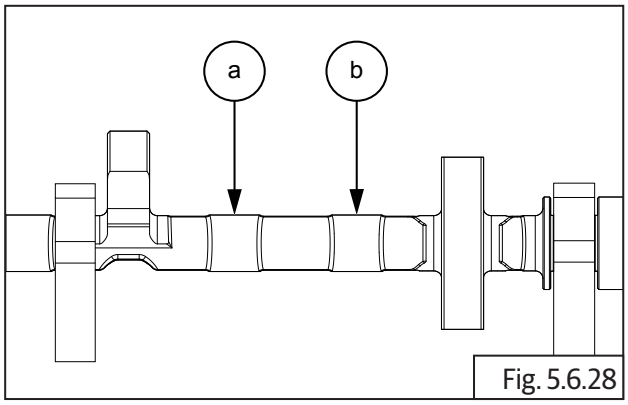

Fig. 5.6.28

	V-Blocks and Dial gauge.

Service limit:	0.020 mm

Balancer Shaft Face Out

- Place the balancer shaft in V-blocks.
- Rotate the balancer shaft and measure the web face out with a dial gauge at the specified place **(a)** and **(b)**.

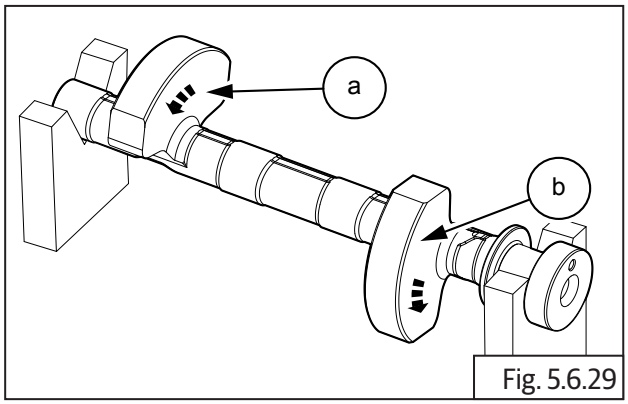

Fig. 5.6.29

	V-Blocks and Dial gauge.

Service limit:	0.040 mm

Balancer Shaft Journal Bearing Clearance

- Measure the clearance between balancer shaft journal and balancer shaft journal bearing.

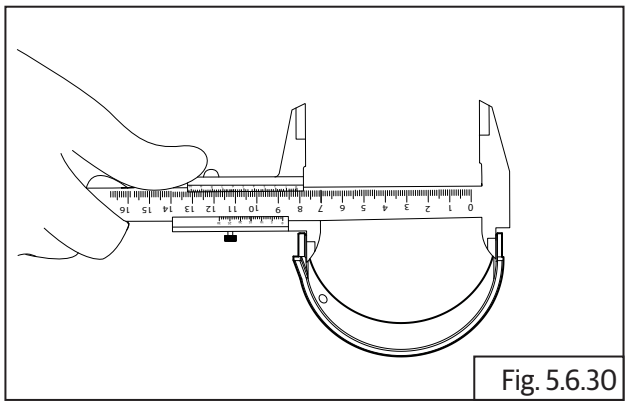
Fig. 5.6.30

	Vernier caliper

Measuring Points	Min	Max	Service Limits
Journal 1 (LH)	0.028	0.034	0.006
Journal 2	0.035	0.042	0.007
Journal 3	0.028	0.035	0.007
Journal 4 (RH)	0.011	0.017	0.006

Crankshaft Face Out

- Place the crankshaft on V-blocks.
- Rotate crankshaft and measure face out with a dial gauge at the specified place.

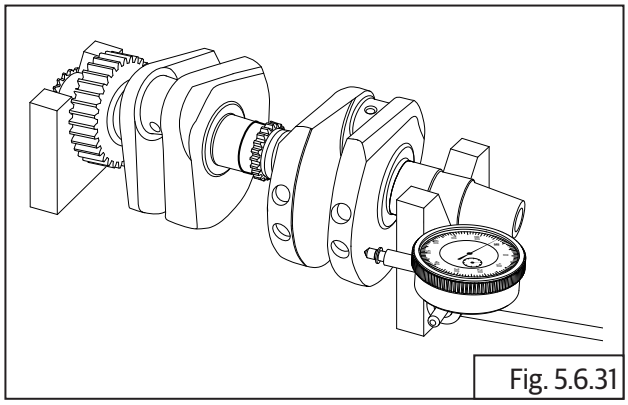
Fig. 5.6.31

	V-Blocks and Dial gauge.

Service limit:	0.040 mm

Crankshaft Run-out

- Place the crankshaft on V-blocks.
- Rotate the crankshaft and measure run-out with a dial gauge at the machined surface.

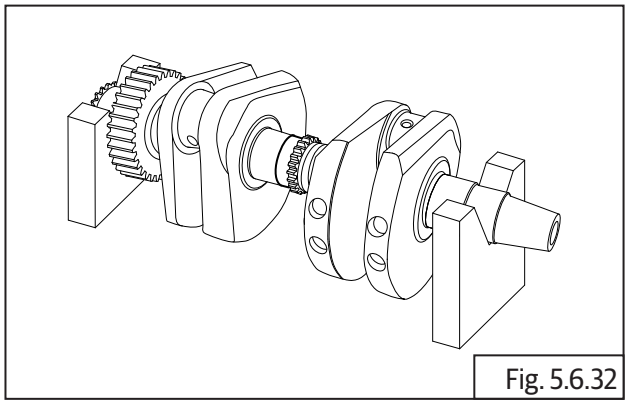

Fig. 5.6.32

	V-Blocks and Dial gauge.

Measuring Points	Service Limit
Journal 1 (LH)	0.032 mm
Journal 2	0.02 mm
Journal 3	0.02 mm
Journal 4 (RH)	0.032MM

Crankshaft Journal Bearing Clearance

- Measure crankshaft journal to crankshaft journal bearing clearance.

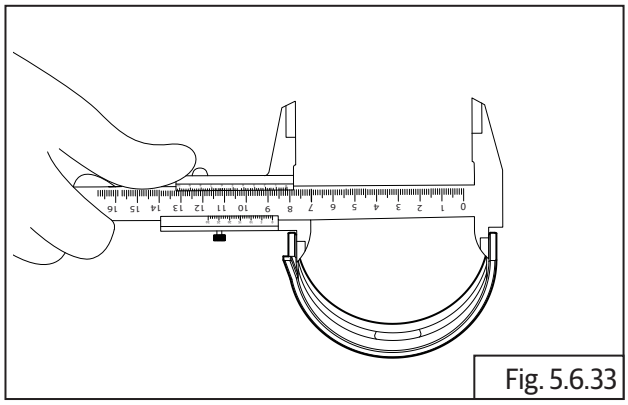

Fig. 5.6.33

	Vernier caliper

Measuring Points	Min	Max	Service Limits
Journal 1 (LH)	-	-	-
Journal 2	0.04	0.048	0.008
Journal 3	0.032	0.04	0.008
Journal 4 (RH)	0.016	0.024	0.008

5.6.4 Clutch Components

Friction plate

- Inspect the clutch plates visually for uneven wear, seizure and discoloration.
- Measure the thickness of the friction plate **(a)** at 4 locations marked by arrows.

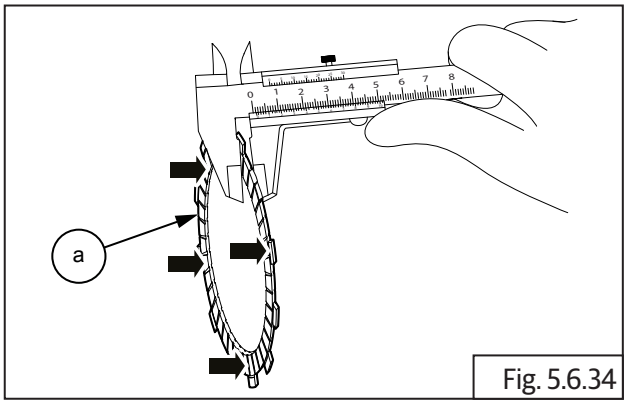

Fig. 5.6.34

	Vernier caliper

Minimum:	2.950 mm
New Maximum:	3.050 mm
Service Limit:	0.100 mm

Steel Plate

- Measure the thickness of the steel plates **(a)** at different locations.

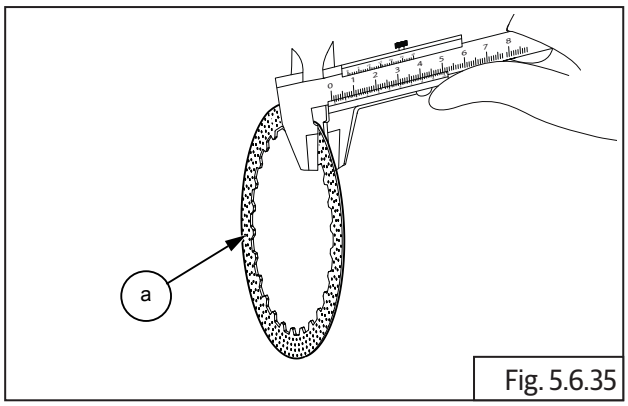

Fig. 5.6.35

	Vernier caliper

Minimum:	1.550 mm
New Maximum:	1.650 mm
Service Limit:	0.100 mm

Clutch Hub (Outer and Inner)

- Inspect the clutch hub **(a)** for any scratches, wear or damage of the lugs.

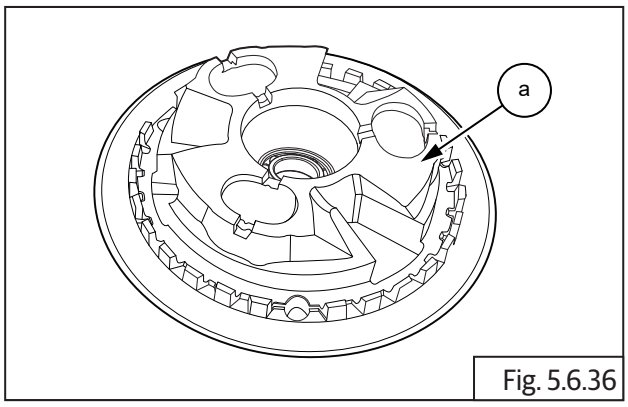

Fig. 5.6.36

- Visually inspect clutch center **(a)** for any scratches, wear or damage.

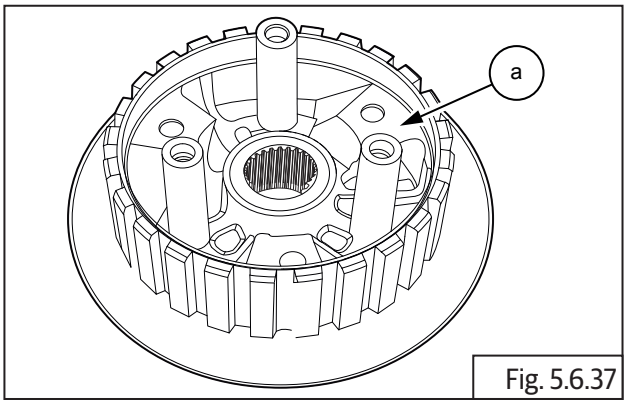

Fig. 5.6.37

Clutch Housing

- Visually inspect clutch housing and lugs for any, wear, bends, lug breakage, heat marks or damages.

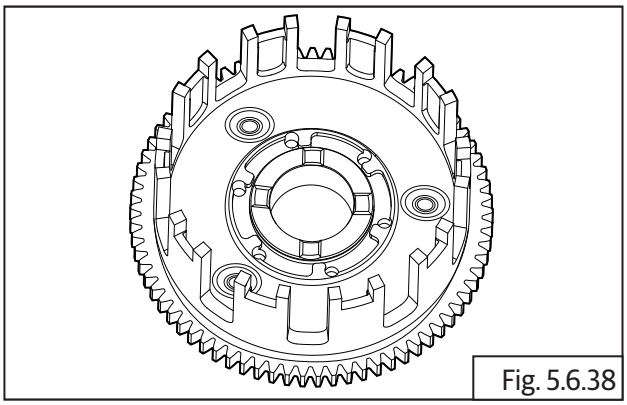

Fig. 5.6.38

5.6.5 Shifter Forks

- Measure the pegs on shifter forks **(a)** using micrometer for wear.

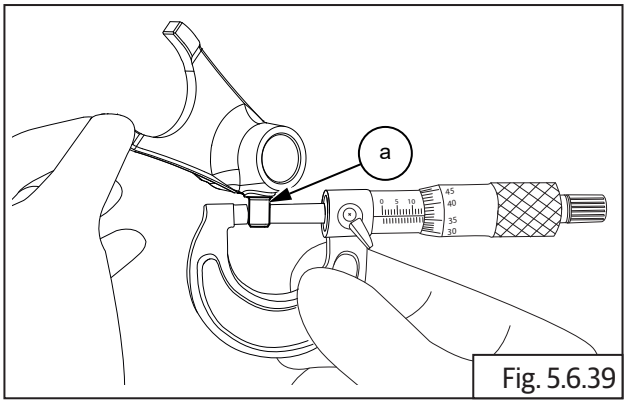

Fig. 5.6.39

	Micrometer

Minimum:	5.300 mm
Maximum:	5.400 mm
Service Limit:	0.100 mm

- Visually inspect the shifter fork machined lugs **(a)** for damage, excessive wear out scoring and replace if damaged.

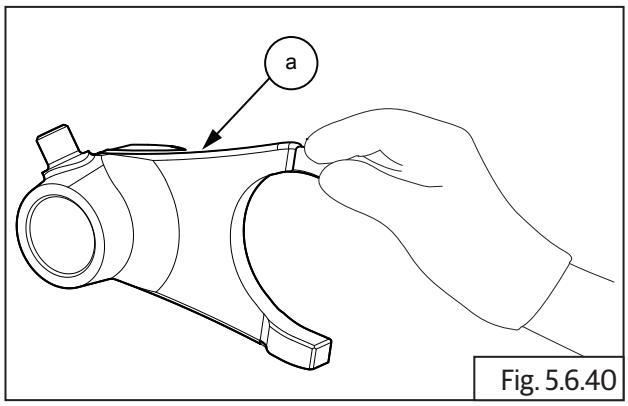

Fig. 5.6.40

5.6.6 Selector Drum

- Inspect the shifter fork working grooves in the selector drum for any damages, chipped ends etc. Measure the grooves in their working area for excessive wear out.

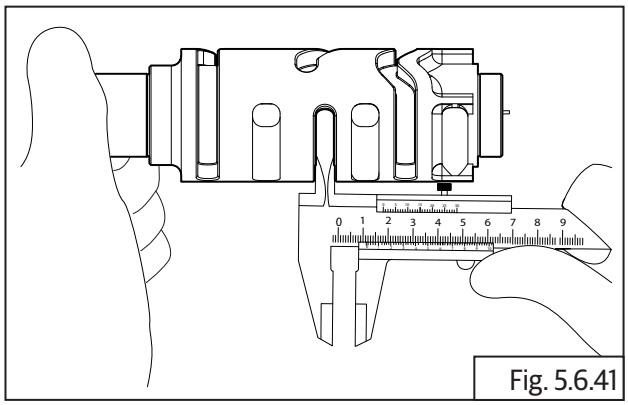
Fig. 5.6.41

	Vernier caliper

Minimum:	6.050 mm
Maximum:	6.200 mm
Service Limit:	0.150 mm

5.6.7 Magneto Cover

- Visually inspect the magneto cover for any outer damages, cracks etc.
- Inspect the cover seating area for any damages pitting etc.
- Place the magneto cover **(a)** on a surface plate and measure for any surface warpage using feeler strip **(b)** of 0.01 mm.
- Replace cover if warpage is beyond service limit.

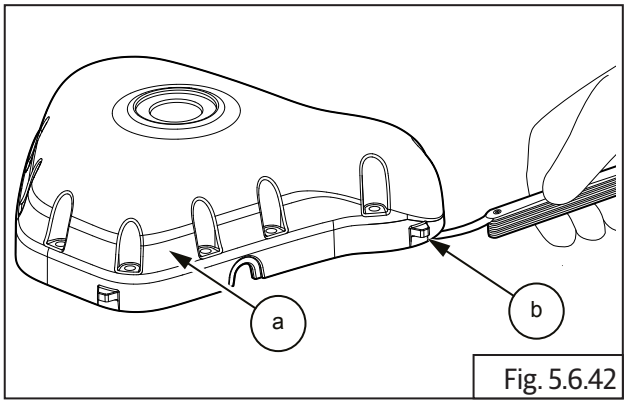

Fig. 5.6.42

	Feeler gauge and Surface plate

Service limit:	0.01 mm

5.6.8 Clutch Cover

- Visually inspect the clutch cover for any outer damages, cracks etc.
- Inspect the cover seating area for any damages pitting etc.
- Place the clutch cover **(a)** on a surface plate and measure for any surface warpage using feeler strip **(b)** of 0.01 mm.
- Replace cover if warpage is beyond service limit.

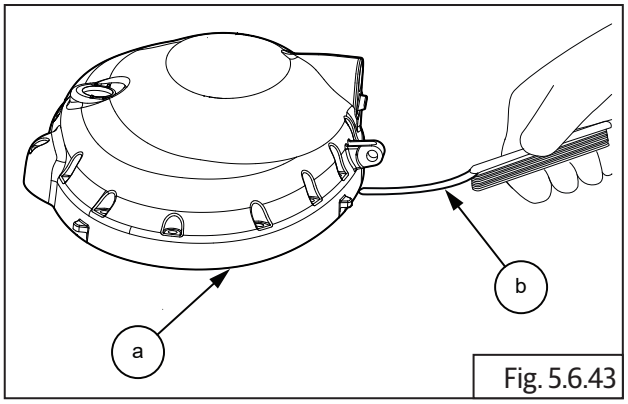

Fig. 5.6.43

	Feeler gauge and Surface plate

Service limit:	0.01 mm

JOURNAL BEARINGS SELECTION

CONTENTS PAGE

5.7 Journal Bearings Selection Chart..... 250

Bearings Selection Procedure..... 250

5.7.1 Crankshaft Journal Bearings 250

5.7.2 Balancer Shaft Journal Bearings.....252

5.7.3 Connecting rod journal bearings 254

83.7 Journal Bearings Selection Chart

Bearings Selection Procedure

83.7.1 Crankshaft Journal Bearings

Crankshaft journal bearings selection chart (1.1)

Crankcase	Crankshaft	Bearing code	Bearing color
A	A	CODE-1	Green
A	B	CODE-2	Black
A	C	CODE-3	Brown
B	A	CODE-2	Black
B	B	CODE-3	Brown
B	C	CODE-4	Yellow

NOTE
• *Crankshaft punch mark will be with alphabets A, B, C punch mark only.*
• *Crankcase punch mark will be with alphabets A, B punch mark only.*

Example:

The below sample illustration is only for explanation for selecting crankshaft journal bearing.

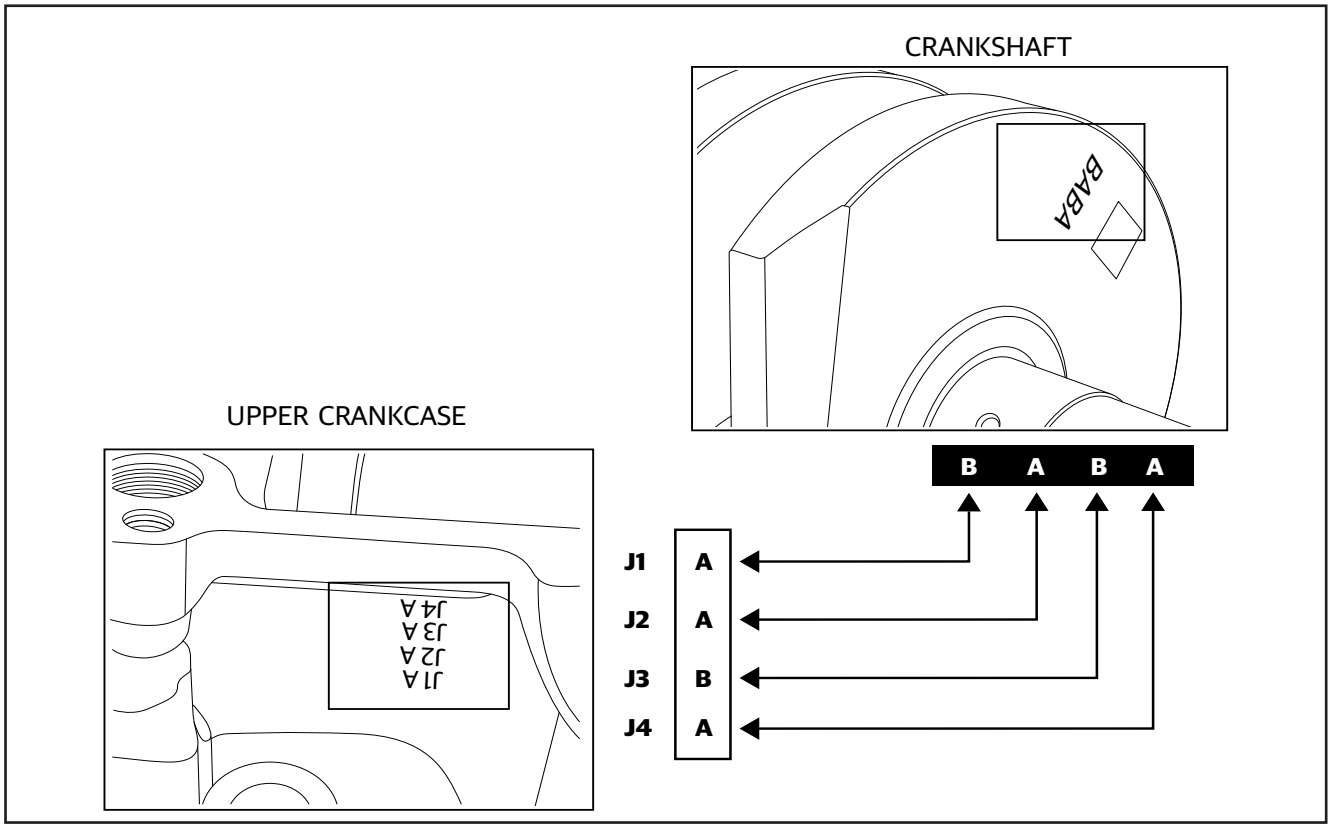

The alphabets punched on the upper crankcase should be correlated with the alphabets punched on the crankshaft web to arrive at the journal wise bearing selection of AA, AB, AC OR BA, BB, BC.

Based on the journal wise markings combination, the corresponding bearing kit (consisting of 2 journal bearings) code/colour should be selected by referring to the chart below as Code - 1, Code - 2, Code - 3, Code - 4.

Crankcase	Crankshaft	Bearing code	Bearing color
A	A	CODE-1	Green
A	B	CODE-2	Black
A	C	CODE-3	Brown
B	A	CODE-2	Black
B	B	CODE-3	Brown
B	C	CODE-4	Yellow

Hence, crankshaft journal bearing selection would be in the following order:

- Journal Bearing 1: Matching: AB, Bearing Code - 2 , Colour: Black
- Journal Bearing 2: Matching: AA, Bearing Code - 1 , Colour: Green
- Journal Bearing 3: Matching: BA, Bearing Code - 2 , Colour: Brown
- Journal Bearing 4: Matching: AA, Bearing Code - 1 , Colour: Green

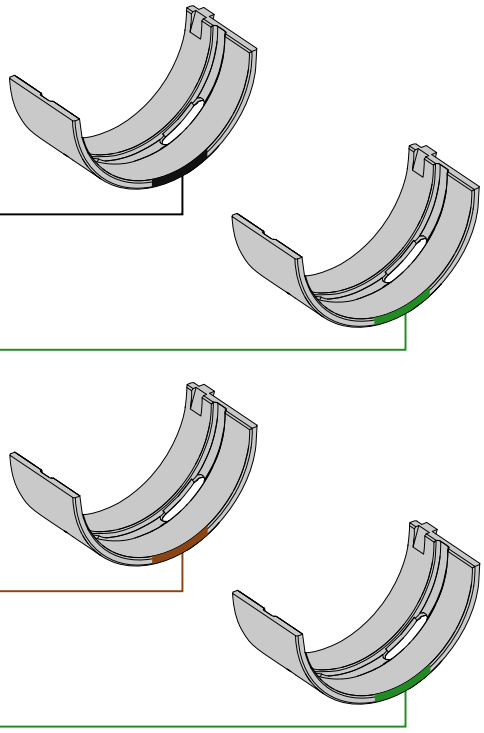

⚠ CAUTION

Ensure the journal bearing seating areas in the upper and lower crankcases are clean and dry.

Ensure the bearings are correctly positioned and aligned before they are fixed into the crankcases.

Do not interchange the journal bearings, they should be installed in their correct sequential order only.

Do not use any tools while installing bearings as it ma y damage the bearings.

Do not reuse journal bearings once they are removed from the crankcases.

83.7.2 Balancer Shaft Journal Bearings

Balancer shaft journal bearing selection chart (1.2)

Crankcase	Balancer Shaft	Bearing code	Bearing color
A	A	CODE-1	Green
A	B	CODE-2	Black
A	C	CODE-3	Brown
B	A	CODE-2	Black
B	B	CODE-3	Brown
B	C	CODE-4	Yellow

NOTE
• *Balancer shaft punch mark will be with alphabets A, B, C punch mark only.*
• *Crankcase punch mark will be with alphabets A, B punch mark only.*

Example:

The below sample illustration is only for explanation for selecting balancer-shaft journal bearing.

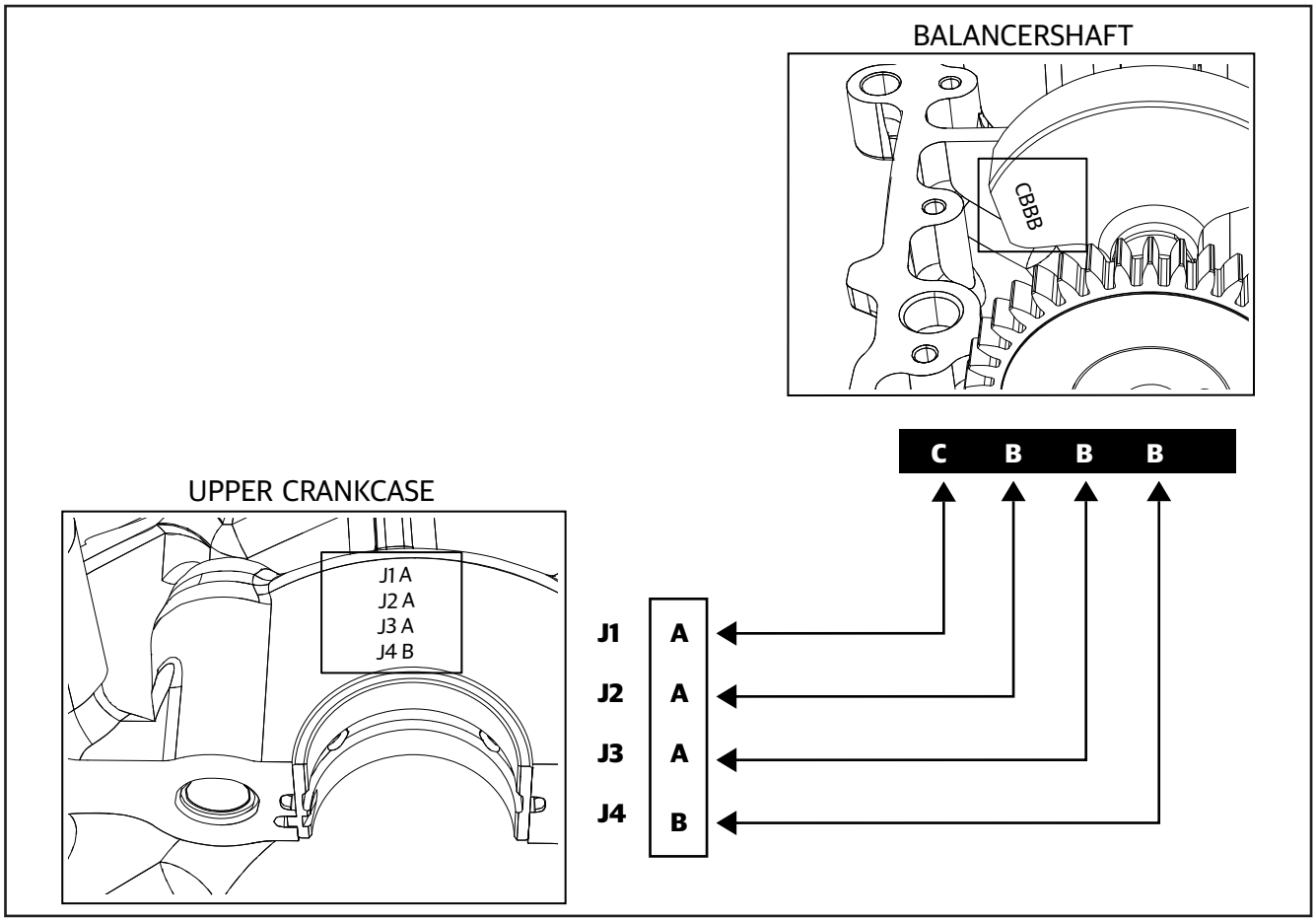

The alphabets punched on the upper crankcase should be correlated with the alphabets punched on the balancer shaft web to arrive at the journal wise bearing selection of AA, AB, AC or BA, BB, BC.

Based on the journal wise markings combination, the corresponding bearing kit (consisting of 2 journal bearings) code/colour should be selected by referring to the chart below as Code - 1, Code - 2, Code - 3, Code - 4.

Crankcase	Balancer Shaft	Bearing code	Bearing color
A	A	CODE-1	Green
A	B	CODE-2	Black
A	C	CODE-3	Brown
B	A	CODE-2	Black
B	B	CODE-3	Brown
B	C	CODE-4	Yellow

Hence, balancer shaft journal beari

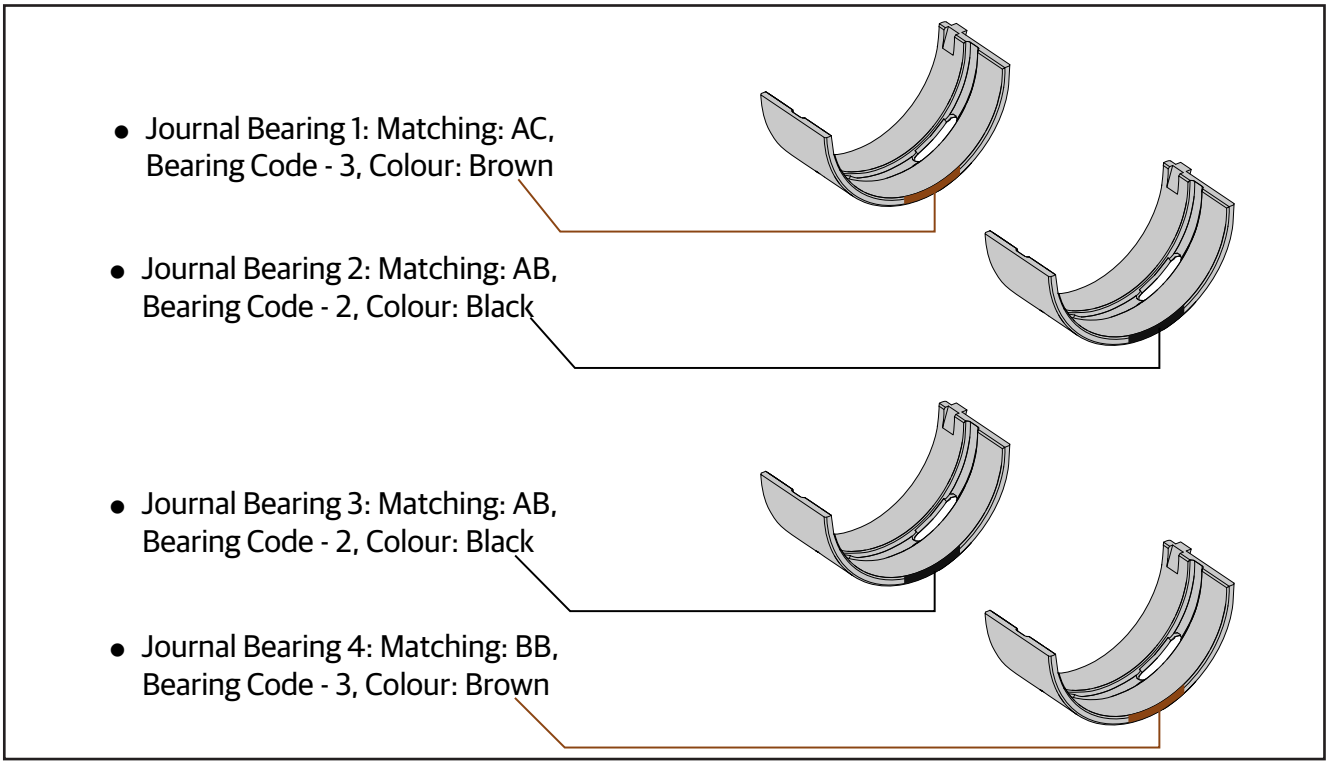

⚠ CAUTION

Ensure the journal bearing seating areas in the upper and lower crankcases are clean and dry.

Ensure the bearings are correctly positioned and aligned before they are fixed into the crankcases.

Do not interchange the journal bearings, they should be installed in their correct sequential order only.

Do not use any tools while installing bearings as it may damage the bearings.

Do not reuse journal bearings once they are removed from the crankcases.

83.7.3 Connecting rod journal bearings

Connecting rod journal bearings selection chart (1.3)

Connecting rod	Crankshaft	Bearing code	Bearing Color
1	1	CODE-1	Green
1	2	CODE-2	Black
2	1	CODE-2	Black
2	2	CODE-3	Brown

NOTE
• *Crankshaft punch mark will be with numerics 1 & 2 only.*
• *Connecting rod punch mark will be with numerics containing 1 & 2 mark only.*

Example:

The below sample illustration is only for explanation for selecting connecting rod journal bearing.

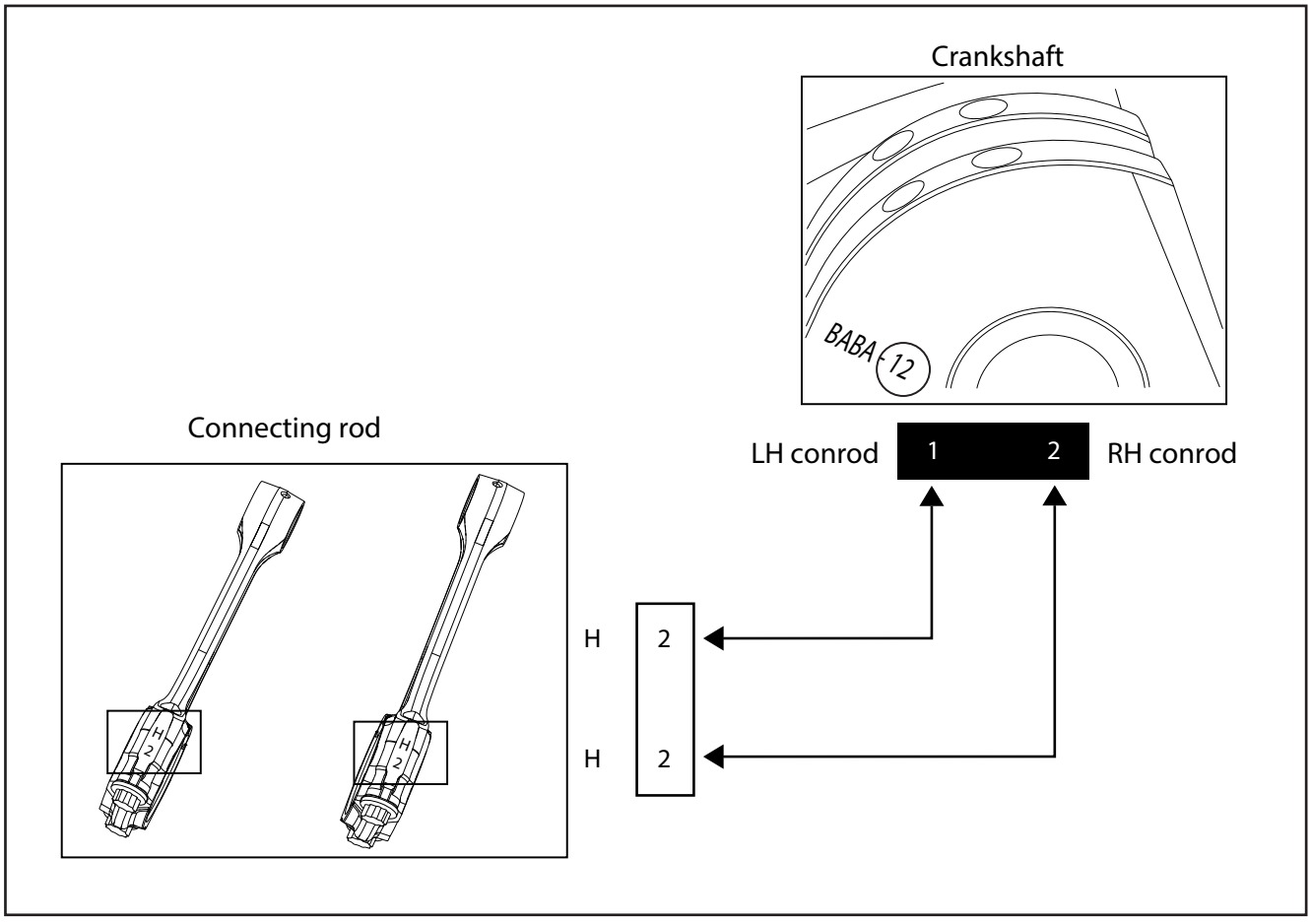

The connecting rod punch mark should be matched with crankshaft numeric punch mark and then the bearing can be selected by referring chart (1.3). Thus the bearing would be Code-2, Code-3

Connecting rod	Crankshaft	Bearing code	Bearing Color
1	1	CODE-1	Green
1	2	CODE-2	Black
2	1	CODE-2	Black
2	2	CODE-3	Brown

Hence connecting rod bearing would be in the following order

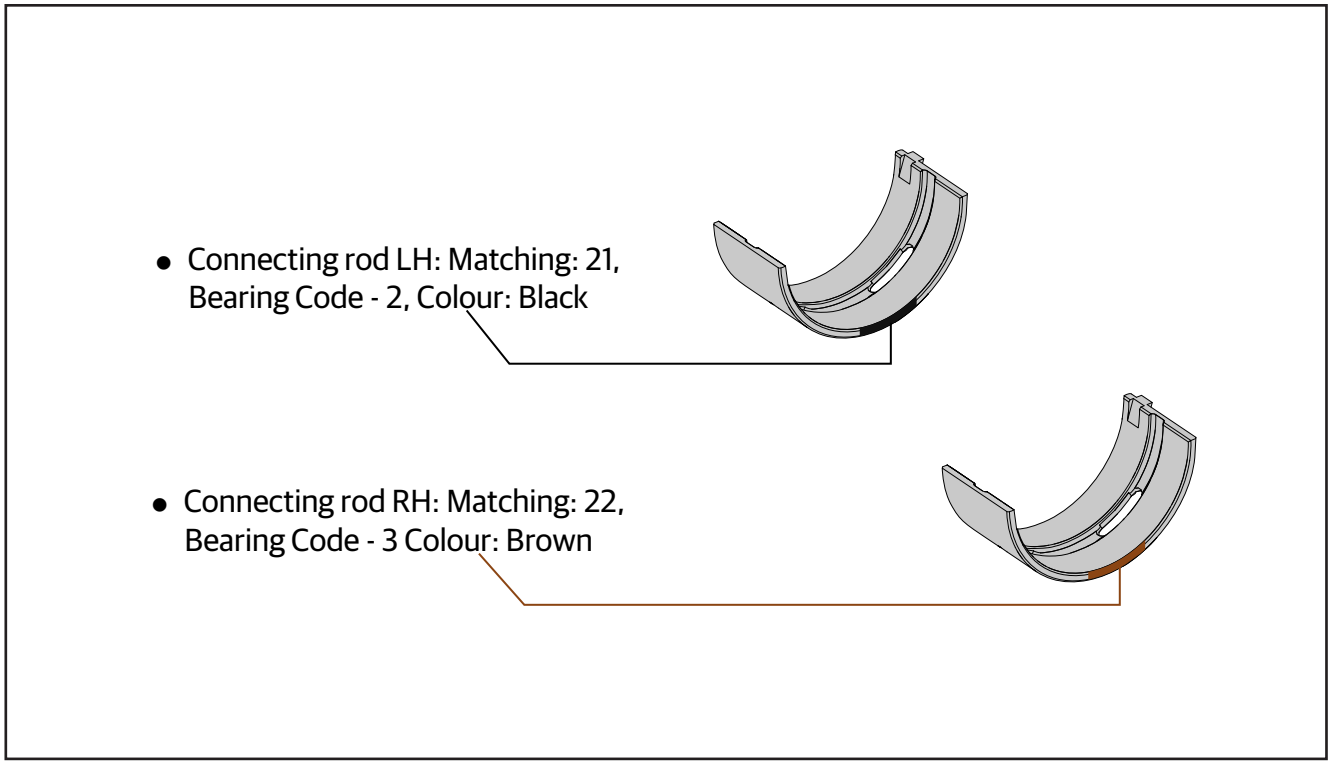

⚠ CAUTION

Ensure the journal bearing seating areas in the connecting rod and connecting rod cup are clean and dry.

Ensure the bearings are correctly positioned and aligned before they are fixed into the connecting rod and connecting rod cup.

Do not interchange the bearings. They should be installed in their correct order only.

Do not use any tools to install the bearings in the connecting rods/connecting rod cups as it may damage the bearings.

Do not reuse the bearings once they are removed from the connecting rods/connecting rod cups.

ENGINE ASSEMBLY

CONTENTS PAGE

5.8 Engine Assembly 259

5.8.1. Components Sub Assembly in Upper Crankcase 259

5.8.2. Crankshaft 260

5.8.3. Connecting Rods 261

5.8.4. Balancer Shaft 262

5.8.5. Countershaft Components 264

5.8.6. Driveshaft Components 268

5.8.7. Gear Shift Cam Drum 272

5.8.8. Shifter fork 273

5.8.9. Crankcases closing 275

5.8.10. Oil Pressure Switch 281

5.8.11. Oil Bypass 281

5.8.12. Oil Strainer 282

5.8.13. Oil Pan 282

5.8.14. Drain Plug 283

5.8.15. Pistons and Rings 283

5.8.16. Cylinder Barrel Dowels on Crankcase 284

5.8.17. Cylinder Barrel Gasket on Crankcase 284

5.8.18. Piston LH in Cylinder Barrel 285

5.8.19. Piston RH in Cylinder Barrel 285

5.8.20. Cylinder Head Gasket on Cylinder Barrel 286

5.8.21. Floating Chain Pad 286

5.8.22. Components in Cylinder Head 288

5.8.23. Cylinder Head on Cylinder Barrel 289

5.8.24. Starter Clutch to Magneto Rotor 290

5.8.25. Ideal Gear in Crankcase LH 291

5.8.26. Woodruf Key on Crankshaft 291

CONTENTS **PAGE**

5.8.27. Magneto Rotor on Crankcase....291
5.8.28. Camshaft Sub-Assembly....292
5.8.29. Timing Chain Tensioner....294
5.8.30. Rocker Arms in Carriers LH and RH....296
5.8.31. Rocker Carrier on Cylinder Head LH....296
5.8.32. Rocker Carrier on Cylinder Head RH....297
5.8.33. Tappet Clearance Adjustment....298
5.8.34. Cover Cylinder Head....300
5.8.35. Reed Valves....301
5.8.36. Inlet Manifold Rubber Flanges LH & RH....302
5.8.37. Star Index....302
5.8.38. Star Index Stopper....303
5.8.39. Shifter Selector Shaft....305
5.8.40. Oil Pump....307
5.8.41. Clutch Assembly....309
5.8.42. Oil Level Window in Clutch Cover....312
5.8.43. Clutch Actuating Lever Assembly....312
5.8.44. Clutch Cover....313
5.8.45. Gear Position Sensor (GPS)....314
5.8.46. FD Sprocket....315
5.8.47. Magneto Cover Sub Assembly....316
5.8.48. Starter Motor....318
5.8.49. Breather Box....318
5.8.50. Oil Filter....319

5.9 Engine Troubleshooting....320

83.8 Engine Assembly

83.8.1. Components Sub Assembly in Upper Crankcase

Crankshaft Journal Bearings

NOTE
• *In case the crankshaft is being resued, please **Do not** disturb OR remove the journal bearings from the crankcase.*
• *Refer journal bearing selection chart before installing journal bearings into crankcase.*
• *Ensure journal bearings are cleaned and well lubricated.*

⚠ CAUTION
Install journal bearings carefully by hand. Do not use any tool. It may scratch the component.

- Match crankcase bearing code with the crankshaft code. Refer journal bearing selection chart (5.7).

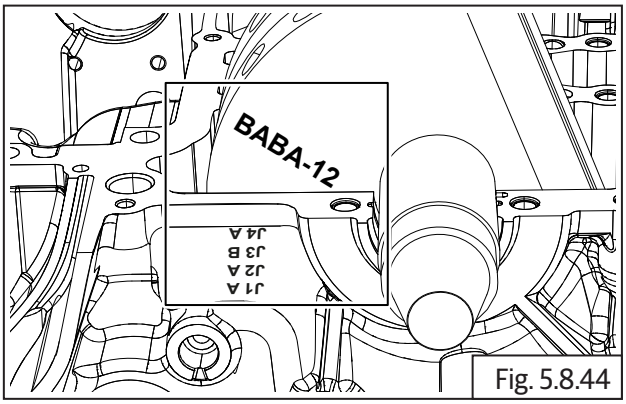

Fig. 5.8.44

- Select appropriate bearing and assemble journal bearings on crankcase from LH side order.
- Locate crankshaft journal bearing in upper crankcase and ensure that journal bearings **(a)** are seated properly on crankcase **(b)**.

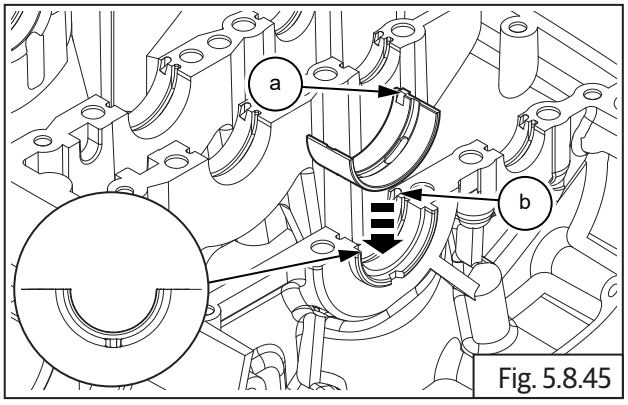

Fig. 5.8.45

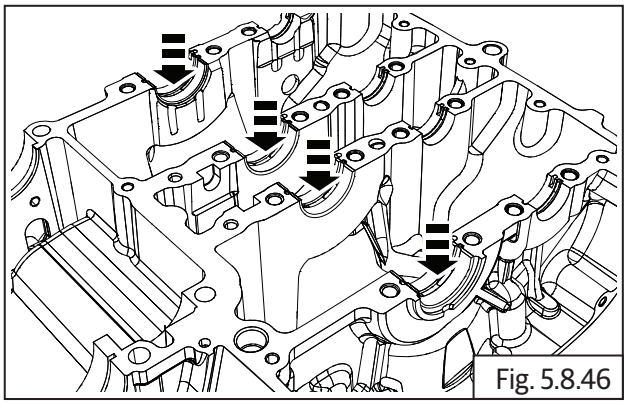
Fig. 5.8.46

Balancershaft Journal Bearings

NOTE
• *In case the balancershaft is being resued, please **Do not** disturb OR remove the journal bearings from the crankcase.*
• *Refer journal bearing selection chart before installing journal bearings into crankcase.*
• *Ensure journal bearings are cleaned and well lubricated.*

⚠ CAUTION
Install journal bearing carefully by hand. Do not use any tool. It may scratch the component.

- Match crankcase bearing code with balancer shaft code. Refer journal bearing selection chart (5.7).

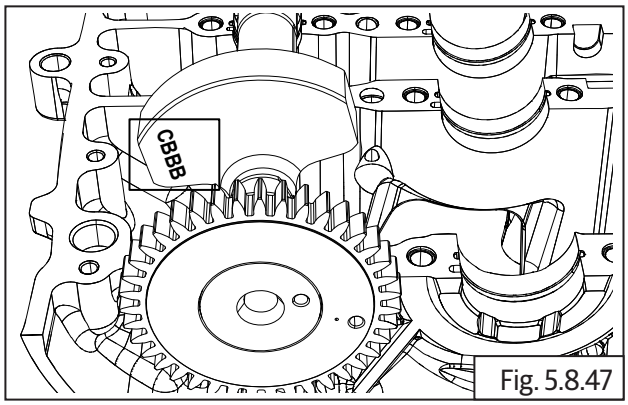

Fig. 5.8.47

- Select appropriate bearing and assemble journal bearings on crankcase from LH side.
- Align mark **(a)** of journal bearing with edge **(b)** in crankcase for balancer shaft.

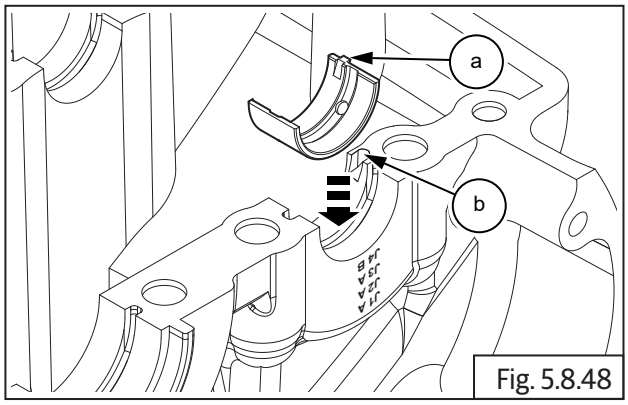

Fig. 5.8.48

Dowels

⚠ CAUTION

Ensure the dowels are correctly located in the upper crankcase.

- Locate and gently press dowels **(a)** in the upper crankcase and ensure they are seated properly.

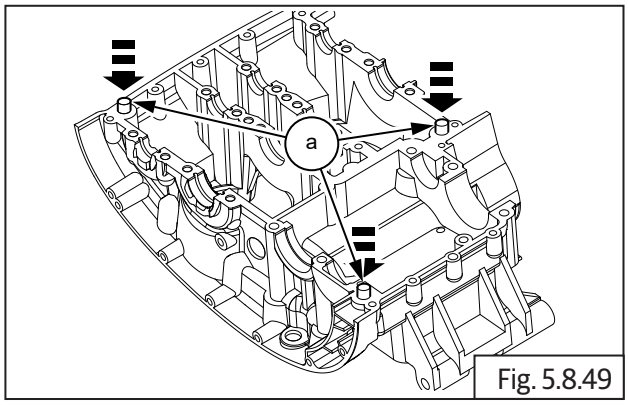

Fig. 5.8.49

Timing Chain Tensioner Pad

- Position timing chain tensioner pad **(a)** in upper crankcase **(b)** with its rubber pad towards the cylinder barrel seating area.

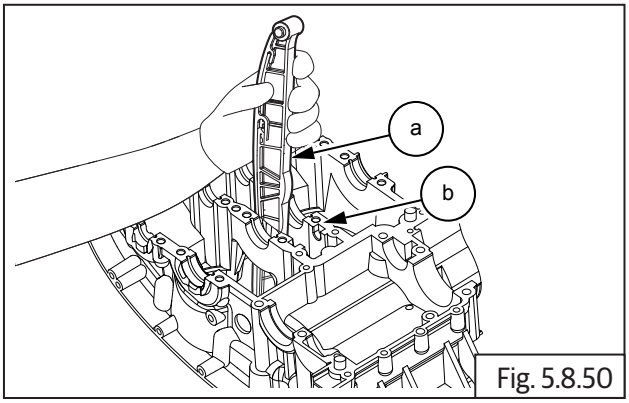

Fig. 5.8.50

- Ensure the lock pegs of the chain tensioner pad are seated correctly in the slots **(a)** in the upper crankcase.

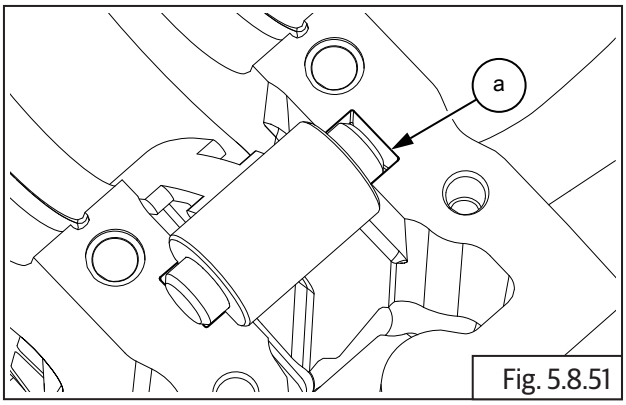

Fig. 5.8.51

83.8.2. Crankshaft

NOTE

- *Ensure journal bearings are cleaned and well lubricated.*

- Assemble timing chain **(a)** on crankshaft gear **(b)**. Ensure it is seated properly.

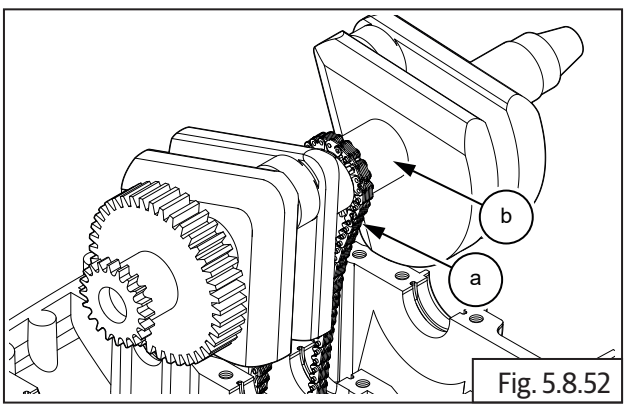

Fig. 5.8.52

- Gently locate crankshaft **(a)** on crankcase **(b)** duly ensuring the following:
  -The timing chain is correctly routed into the cylinder barrel seating area.
  -The gear on the crankshaft is on the RH side (clutch side) of the upper crankcase.

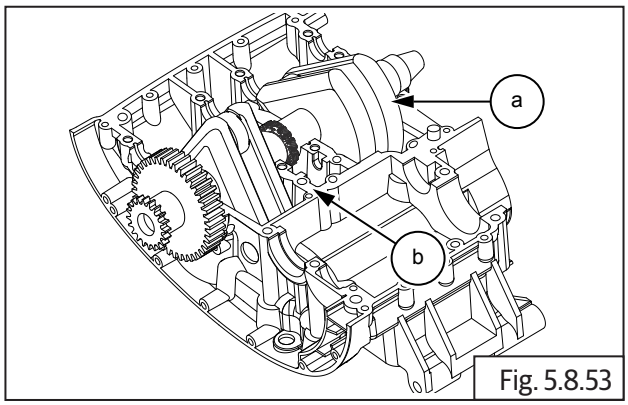

Fig. 5.8.53

83.8.3. Connecting Rods

NOTE
• *Ensure new journal bearings are located correctly in the connecting rods and caps.*

- Connecting rod bolts are for one time use only. **Do not** reuse connecting rod bolts. Always replace them.
- **Do not** interchange connecting rod cap.
- Ensure the lug **(a)** in journal bearing is located in the grooves **(b)** on both connecting rod and cap is seated properly.

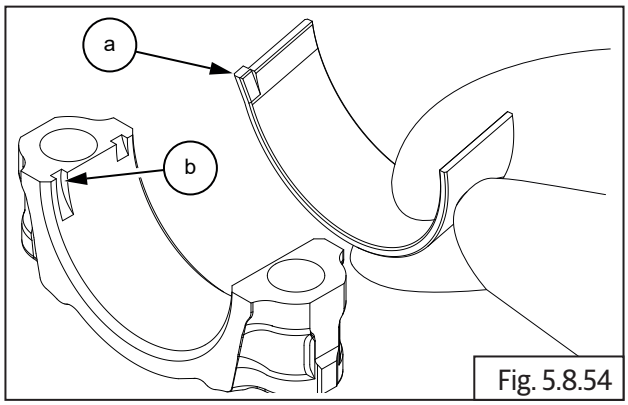

Fig. 5.8.54

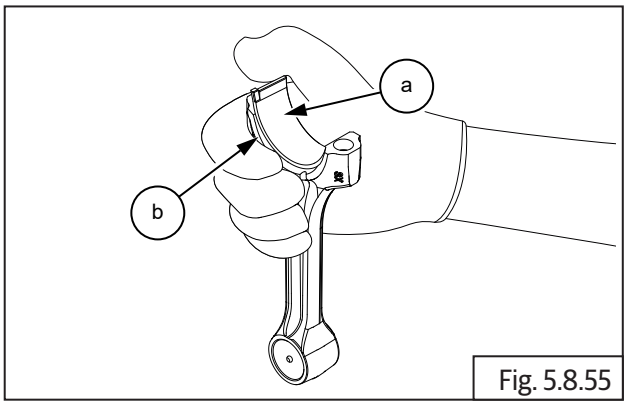

Fig. 5.8.55

⚠ WARNING

Ensure connecting rods Do not get damaged during assembly.

Ensure crankshaft position is such that connecting rods are not projecting out of spigot.

Support crankcase such that it is atleast 3 cm above surface table.

- Insert connecting rod big end through the cylinder barrel seating area and ensure it is seated properly on the crankshaft.
- Support connecting rod to prevent it from falling off.
- Position connecting rod cap on the crankshaft and ensure the mounting holes of the cap and connecting rod are aligned.

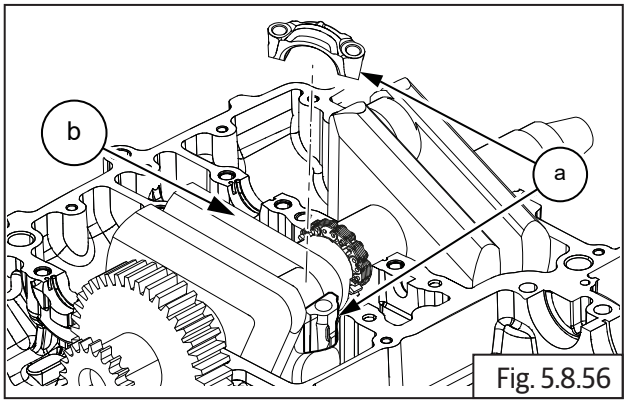

Fig. 5.8.56

- Lubricate and locate 2 Nos. Bi-hexagon bolts **(M9) (a)** on cap and tighten as follows:

  Initially the bolts are first torqued evenly

  subsequently a second torque is applied evenly.

  Finally angle torqued as specified below.

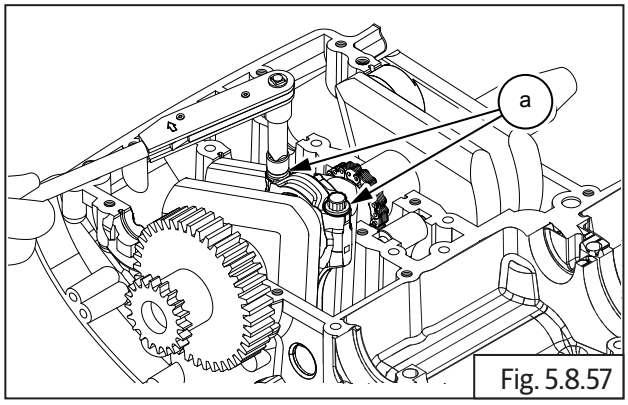

Fig. 5.8.57

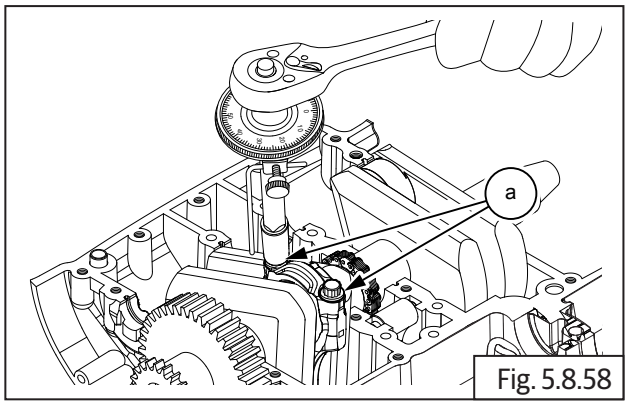

Fig. 5.8.58

	13 mm Bi-hexagon socket with Ratchet
1st Torque	40 N-m/4 kgf-m
2nd Torque	14 N-m/1.4 kgf-m
Angular Torque	75° (deg)

- Repeat above process to assemble the other connecting rod on the crankshaft.

83.8.4. Balancer Shaft

- Ensure the punch mark on the crankshaft gear **(b)** is towards the front of the upper crankcase.
- Locate balancer shaft in upper crankcase duly ensuring the punch mark on the gear **(a)** is aligned with the punch mark on the crankshaft gear.
- Ensure both the gears are meshed correctly.

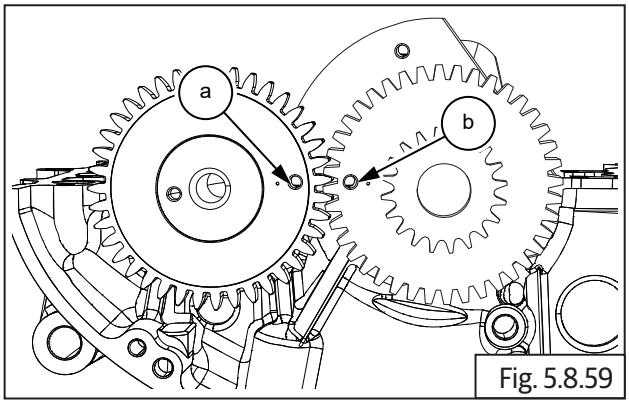

Fig. 5.8.59

Countershaft Assembly Sequence

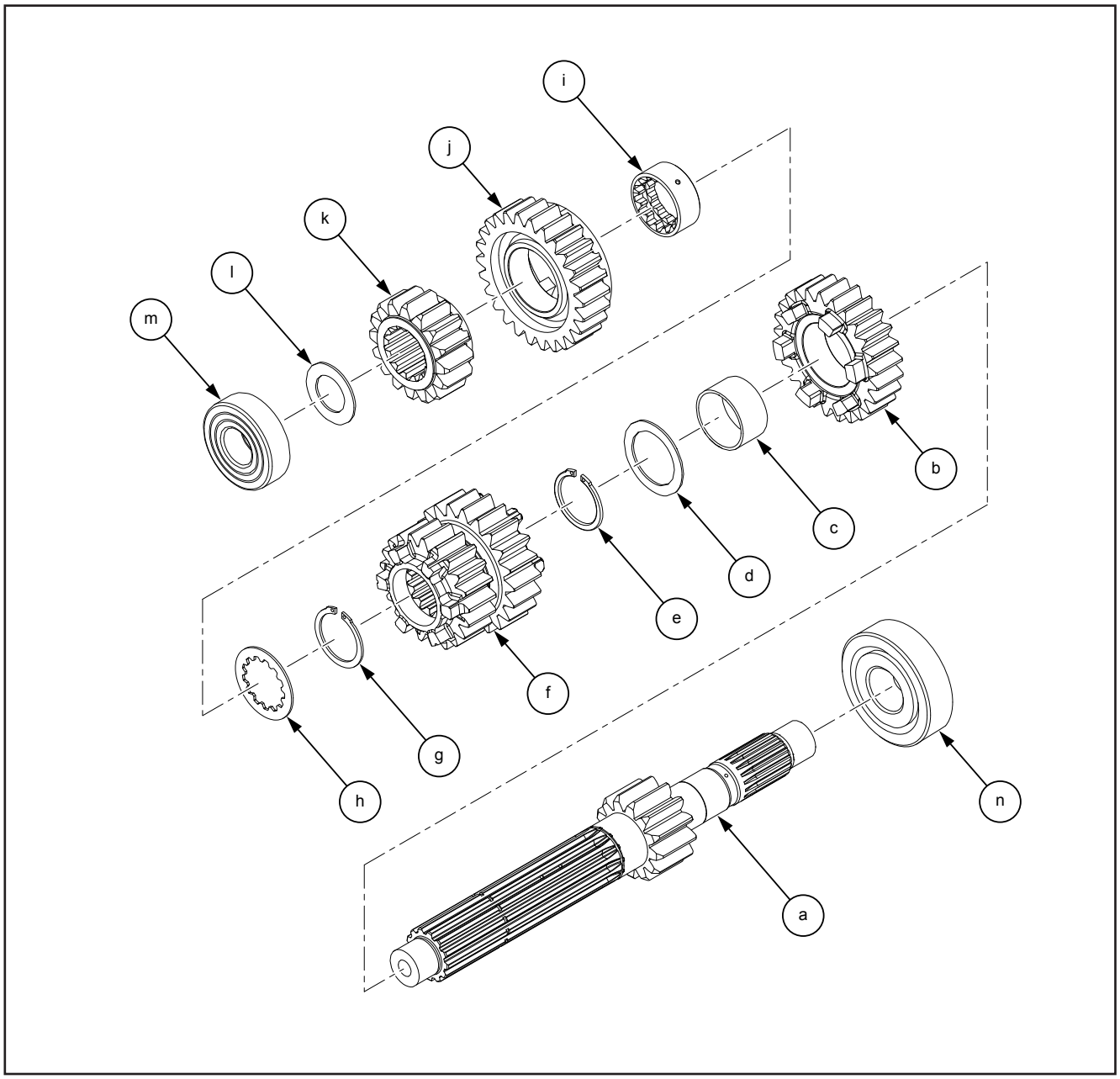

Item No.	Description	Quantity	Item No.	Description	Quantity
a	Countershaft with 1st Gear	1	h	Splined Plate Washer	1
b	5th Gear (24 teeth)	1	i	Splined Bush	1
c	Plain Bush	1	j	6th Gear (26 teeth)	1
d	Thrust Washer	1	k	2nd Gear (16 teeth)	1
e	Circlip	1	l	Thrust Washer	1
f	Double Gear (3rd and 4th Gear) (21 teeth)	1	m	Bearing	1
g	Circlip	1	n	Bearing	1

NOTE
• ***Do not*** *reuse thrust washers, circlips, collar bush. Always replace with new parts.*
• *Ensure all components are cleaned and lubricated with recommended lubricants before assembly.*
• *The countershaft gears can be recognized by size: the gear with the smallest diameter is 2nd gear, and the one with largest is 6th gear. Ensure that all parts are put back in correct sequence and all circlips and washers are incorporated in correct places.*

83.8.5. Countershaft Components

- Assemble ball bearing **(a)** on countershaft **(b)** from short end and ensure it is fully seated against the gear on driveshaft.

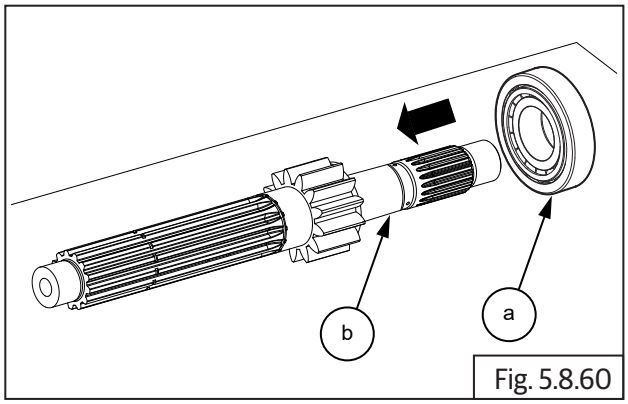

Fig. 5.8.60

- Assemble 5th gear **(a)** on countershaft **(b)** from longer end and ensure machined surface of gear is facing countershaft gear and lugs are facing outside.

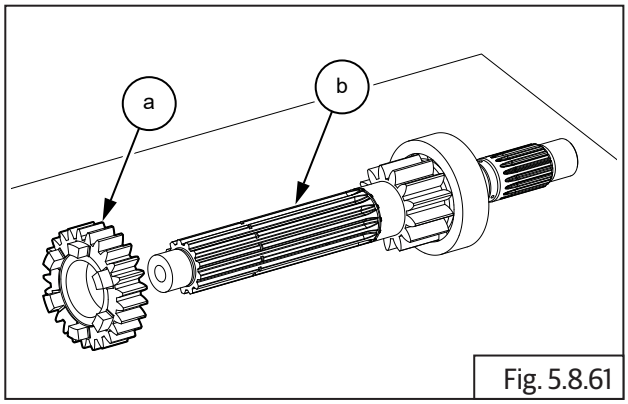

Fig. 5.8.61

- Assemble plain bush **(a)** on countershaft **(b)**.
- Ensure oil hole in plain bush is aligned with oil hole in countershaft.

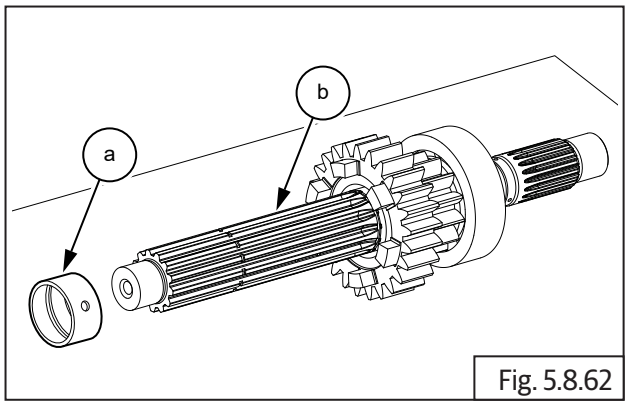

Fig. 5.8.62

NOTE
• *Ensure bush is fully seated against 5th gear on countershaft*

- Assemble 1st plain thrust washer **(a)** on countershaft **(b)** and ensure it is fully seated against 5th gear.

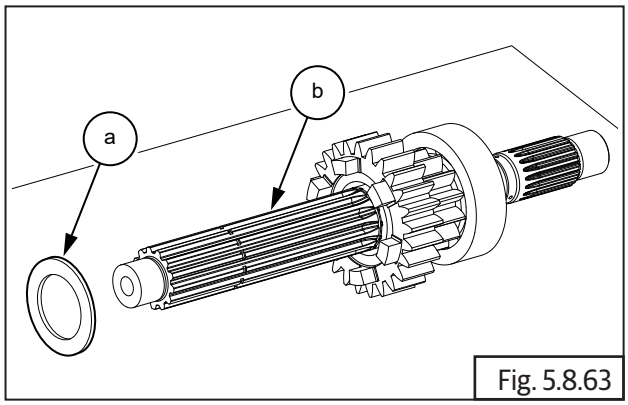

Fig. 5.8.63

- Assemble 1st circlip **(a)** on groove on countershaft **(b)** and ensure it is seated properly in the groove near 5th gear.
- Gently rotate circlip without expanding to ensure it is properly seated.

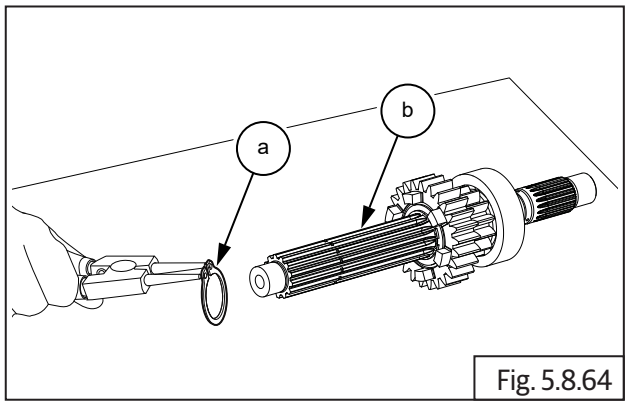

Fig. 5.8.64

	Circlip plier

- Assemble 3rd and 4th (double gear) **(a)** on countershaft **(b)** such that the 4th gear is facing the lugs on the 5th gear .

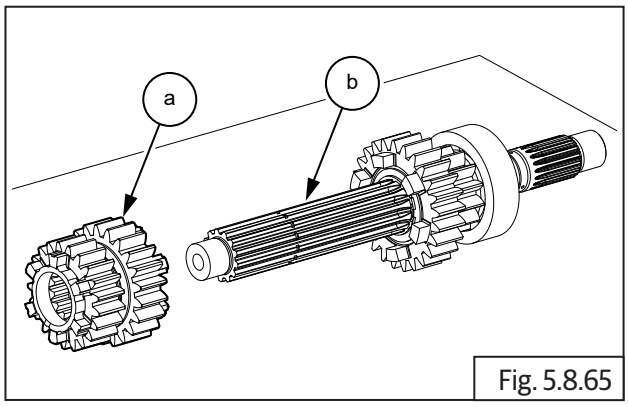

Fig. 5.8.65

- Assemble 2nd circlip **(a)** on groove on countershaft **(b)** and ensure it is seated properly on groove.

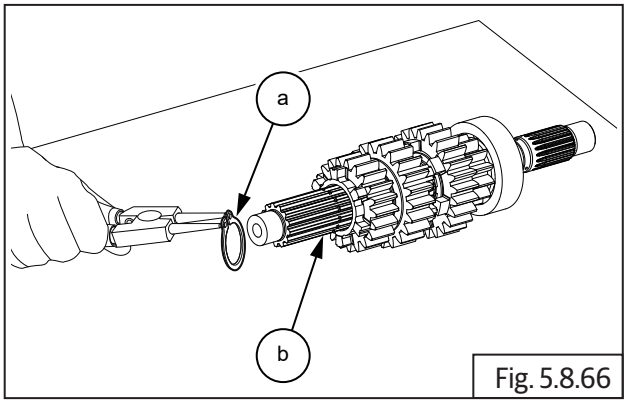

Fig. 5.8.66

	Circlip plier

- Assemble splined thrust washer **(a)** on countershaft **(b)** and ensure it is seated properly against circlip.

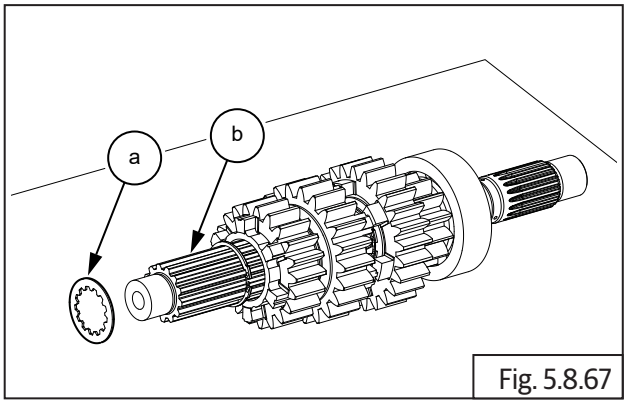

Fig. 5.8.67

- Ensure oil hole in splined bush is aligned with oil hole in countershaft and assemble splined bush **(a)** on countershaft **(b)**.

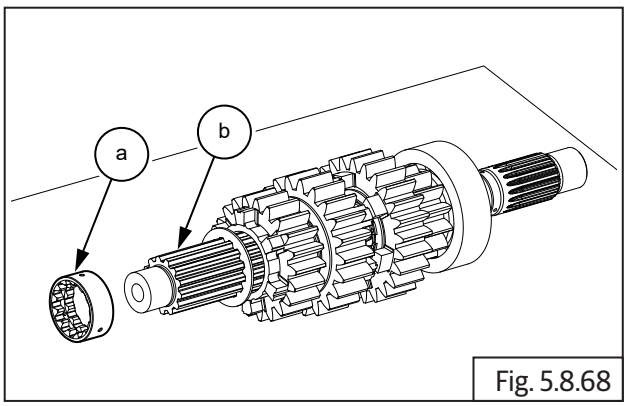

Fig. 5.8.68

NOTE
• *Ensure bush is fully seated against thrust washer on countershaft.*

- Assemble 6th gear **(a)** on countershaft **(b)** and ensure lugs are facing double gear.

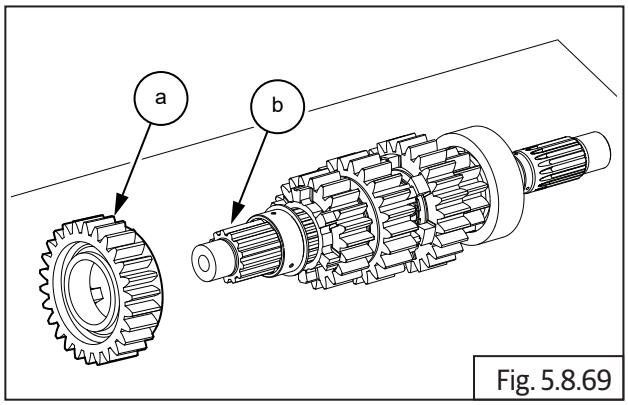

Fig. 5.8.69

- Assemble 2nd gear **(a)** on countershaft **(b)**.

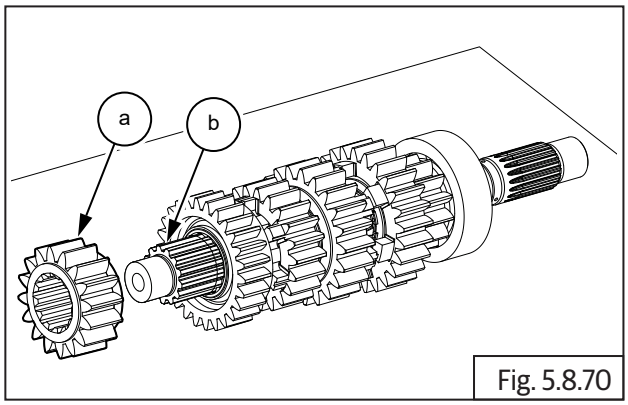

Fig. 5.8.70

- Assemble thrust washer **(a)** on countershaft **(b)**.

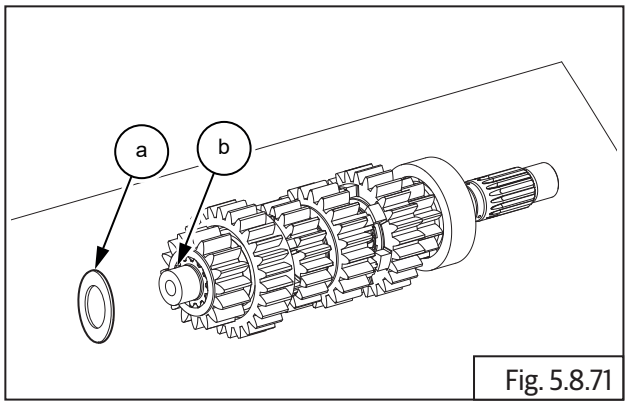

Fig. 5.8.71

- Assemble ball bearing **(a)** on countershaft **(b)** and ensure it is properly seated against thrust washer on countershaft.

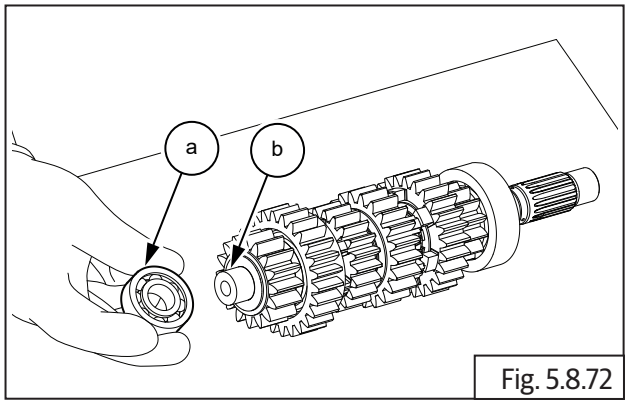

Fig. 5.8.72

- Locate countershaft bearing stopper plate **(a)** and assemble 2 Nos. Hex head bolts **(M5) (b)**.

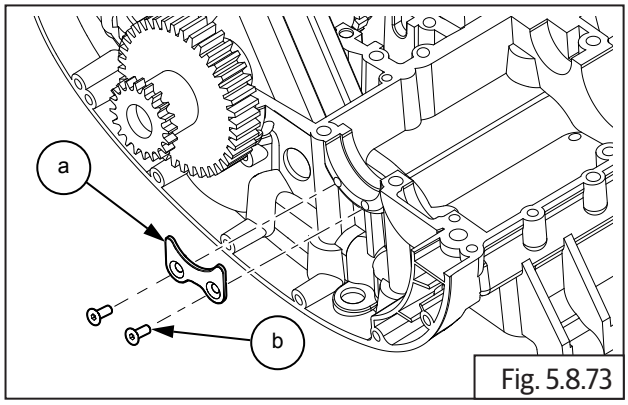

Fig. 5.8.73

	4 mm Allen socket with Ratchet

- Assemble the countershaft assembly **(a)** with gears on the upper crankcase **(b)** with its splined end towards the RH side (clutch side).

- Ensure the two bearings are correctly seated in their respective housings.

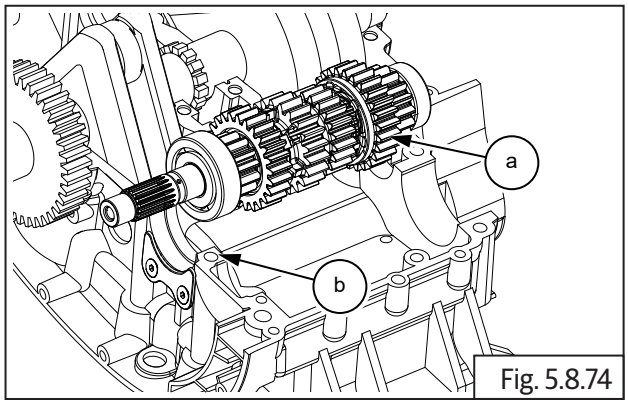

Fig. 5.8.74

Driveshaft Assembly Sequence

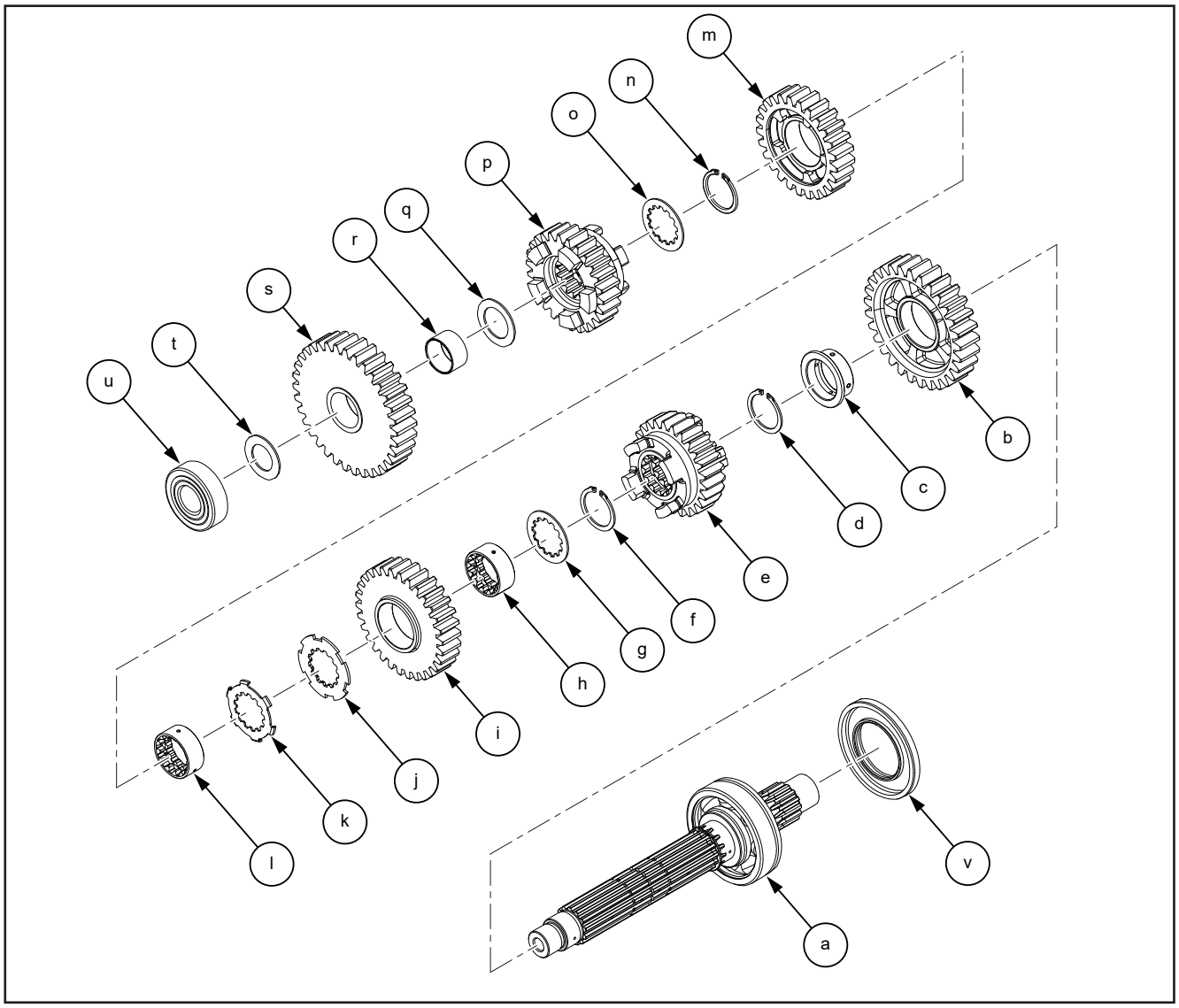

Item No.	Description	Quantity	Item No.	Description	Quantity
a	Driveshaft and Bearing	1	l	Splined bush	1
b	2nd Gear (29 teeth)	1	m	4th Gear (25 teeth)	1
c	Plain color bush	1	n	Splined thrust washer	1
d	Circlip	1	o	Circlip	1
e	6th Gear (25 teeth)	1	p	5th Gear (26 teeth)	1
f	Circlip	1	q	Thrust washer	1
g	Splined thrust washer	1	r	Plain bush	1
h	Splined bush	1	s	1st gear (34 teeth)	1
i	3rd Gear (30 teeth)	1	t	Thrust washer	1
j	Lock Splined washer	1	u	Bearing	1
k	Splined washer lock	1	v	Rubber seal	1

83.8.6. Driveshaft Components

NOTE
• ***Do not*** *resue thrust washers, circlips, collar bush. Always replace with new parts.*
• *Ensure each component is cleaned and lubricated with recommended lubricant.*
• *The driveshaft gears can be recognized by size: the gear with the smallest diameter is 6th gear, and the one with largest is 1st gear. Ensure that all parts are put back in correct sequence and all circlips and washers are incorporated in correct place.*

- Assemble ball bearing **(a)** on driveshaft **(a)** from short end and ensure it is fully seated against stopper on driveshaft.

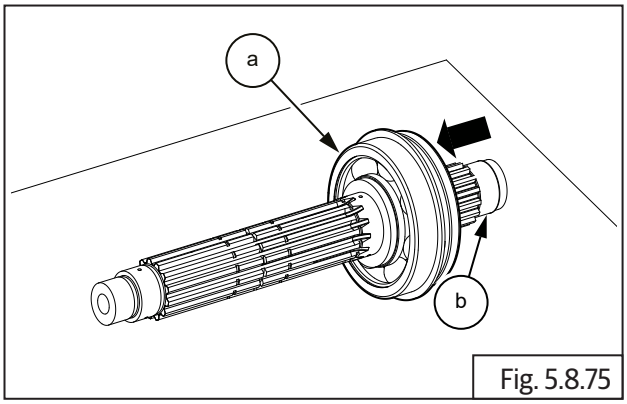

Fig. 5.8.75

- Ensure machined surface of 2nd gear is facing bearing and assemble 2nd gear **(a)** on driveshaft **(b)** from the longer splines end.

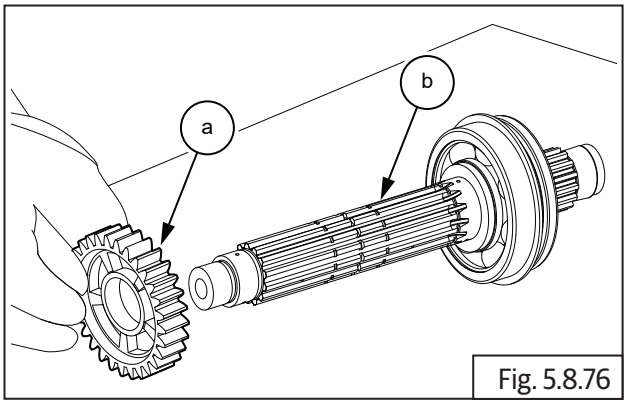

Fig. 5.8.76

- Ensure collar on bush **(a)** is facing outside and assemble 2nd gear collared bush on driveshaft. Ensure bush is seated properly inside 2nd gear.

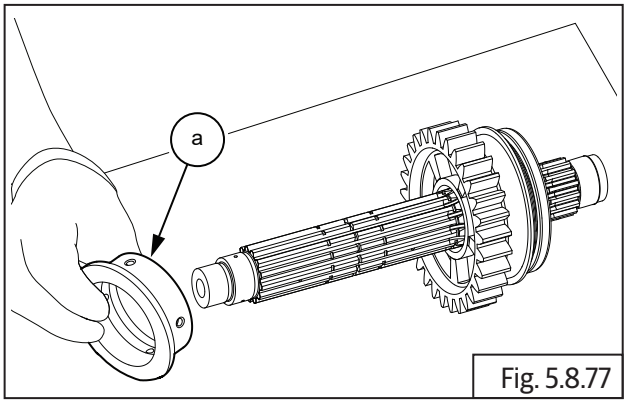

Fig. 5.8.77

NOTE
• *Ensure bush is seated properly inside 2nd gear.*

- Assemble 1st circlip **(a)** on innermost groove in driveshaft **(b)** and ensure it is seated properly on groove against 2nd gear bush.

NOTE
• *Gently rotate circlip without expanding to ensure it is properly seated in groove in driveshaft.*

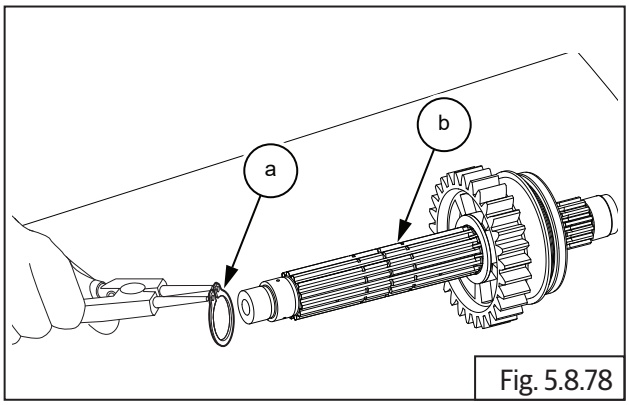

Fig. 5.8.78

	Circlip plier

- Assemble 6th gear **(a)** on driveshaft **(b)** ensuring lugs on larger face of gear are facing 2nd gear.

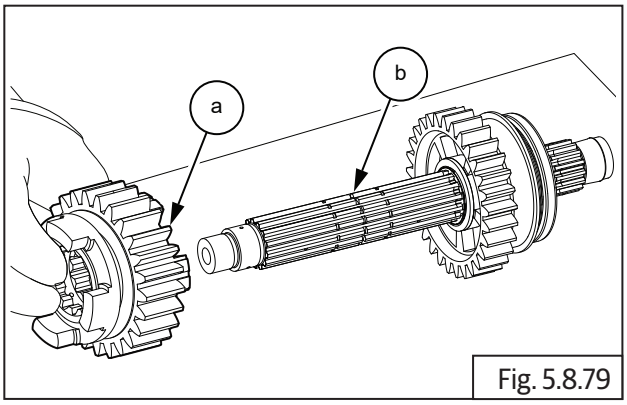

Fig. 5.8.79

- Assemble 2nd circlip **(a)** on inner groove on driveshaft **(b)** and ensure it is seated properly on groove.

NOTE
• *Gently rotate circlip without expanding to ensure it is properly seated in groove in driveshaft.*

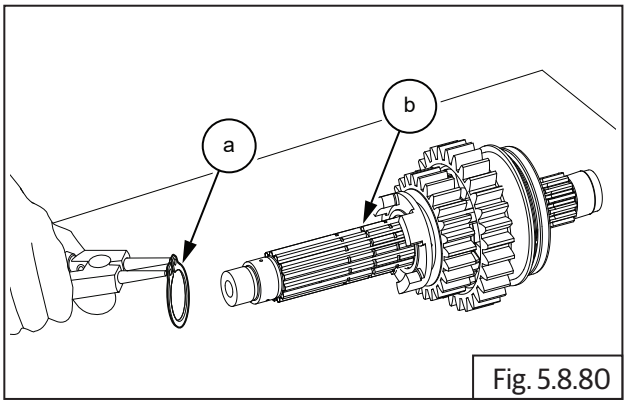

Fig. 5.8.80

	Circlip plier

- Assemble splined thrust washer **(a)** on driveshaft **(b)** and ensure it is seated properly against circlip.

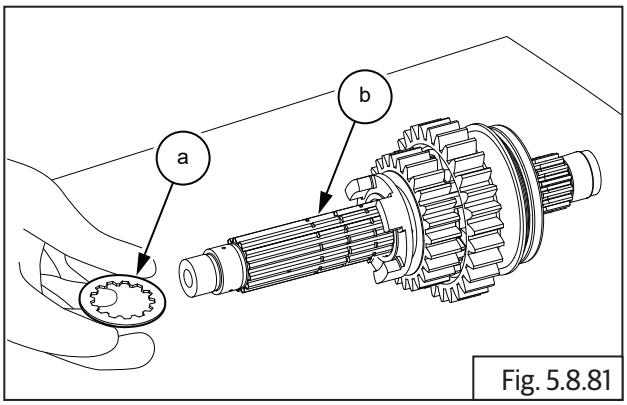

Fig. 5.8.81

- Ensure oil hole in 1st splined bush **(a)** is aligned with oil hole in driveshaft **(b)** and assemble splined bush on driveshaft.

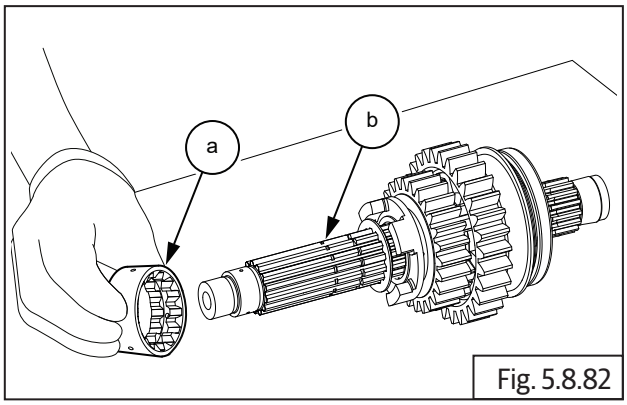

Fig. 5.8.82

NOTE
• *Ensure bush is fully seated against thrust washer in driveshaft.*

- Ensure collar on 3rd gear **(a)** is facing outside and assemble 3rd gear on driveshaft **(b)**.

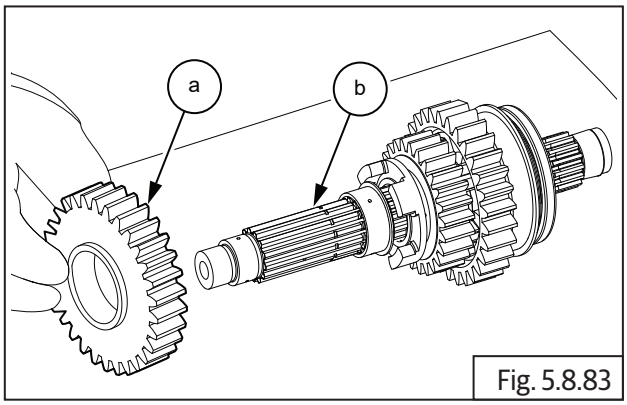

Fig. 5.8.83

NOTE
• *Ensure gear is fully seated on splined bush.*

- Insert thrust lock washer **(a)** with internal and external splines on driveshaft **(b)** and align internal splines with groove in driveshaft.
- Rotate lock washer such that the washer locks in place on driveshaft and cannot come out.

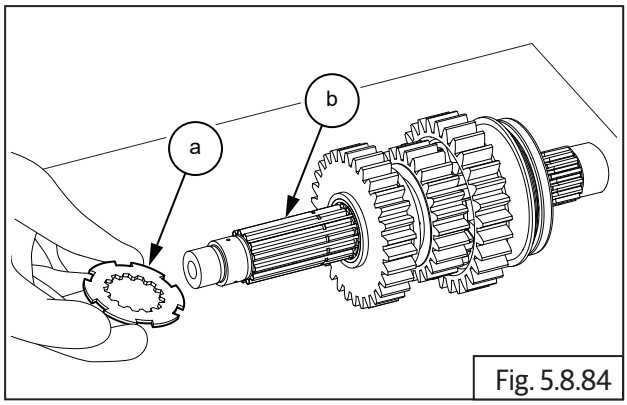

Fig. 5.8.84

- Assemble splined lock washer **(a)** on driveshaft **(b)** such that the outside tabs are facing the lock washer on driveshaft.
- Ensure outer tabs of lock washer are aligned and fully seated in outer splines of lock washer.

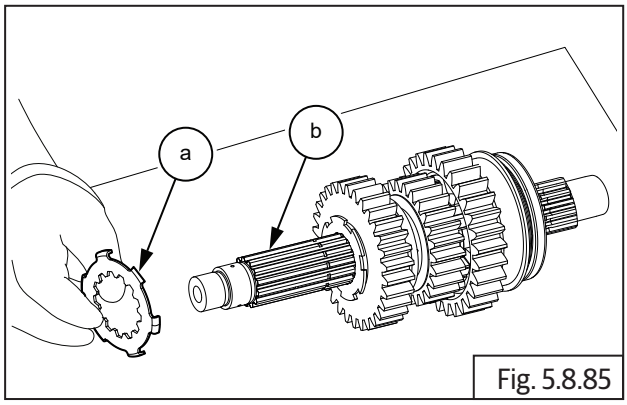

Fig. 5.8.85

- Ensure oil hole in 2nd splined bush **(a)** is aligned with oil hole in driveshaft **(b**) and assemble splined bush on driveshaft.

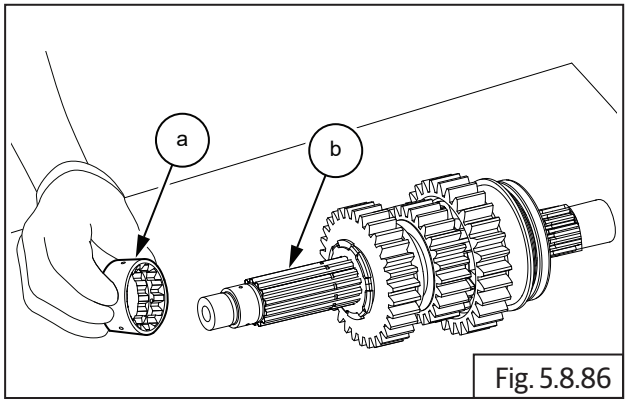

Fig. 5.8.86

NOTE

- *Ensure bush is fully seated against lock washer on driveshaft.*

- Assemble 4th gear **(a)** on the driveshaft **(b)** with its machined surface facing 3rd gear and recessed lugs of 4th gear facing outside.
- Ensure 4th gear is seated fully on splined bush.

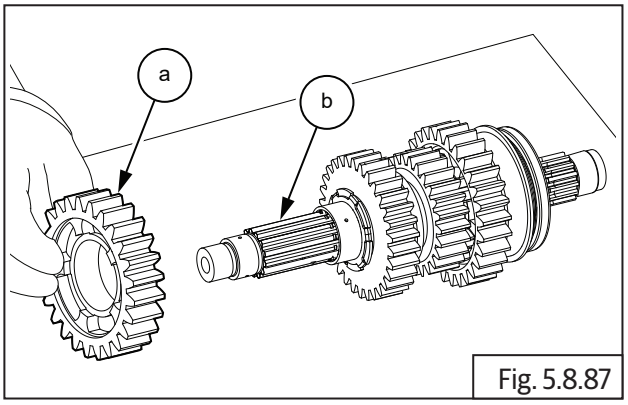

Fig. 5.8.87

- Assemble 2nd splined washer **(a)** on driveshaft **(b)** and ensure it is fully seated against 4th gear.

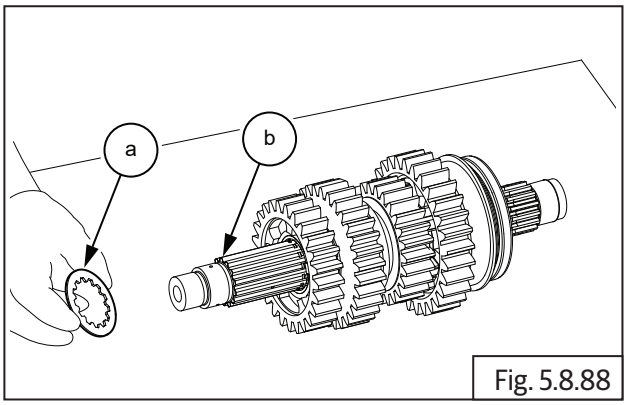

Fig. 5.8.88

NOTE

- *Gently rotate circlip without expanding to ensure it is properly seated in groove in driveshaft.*

- Assemble 3rd circlip **(a)** on groove on driveshaft **(b)** and ensure circlip is properly seated in groove.

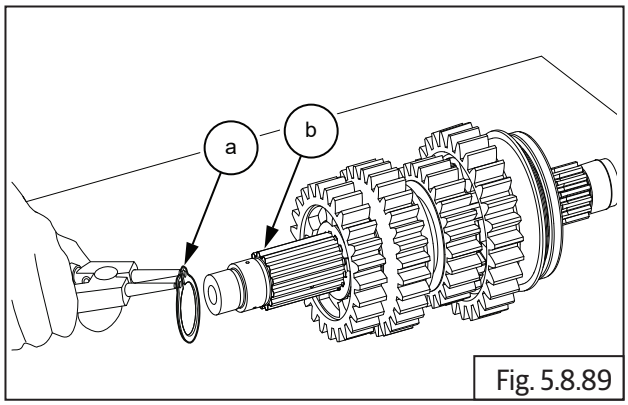

Fig. 5.8.89

	Circlip plier

- Assemble 5th gear **(a)** on driveshaft **(b)** with lugs facing 4th gear.

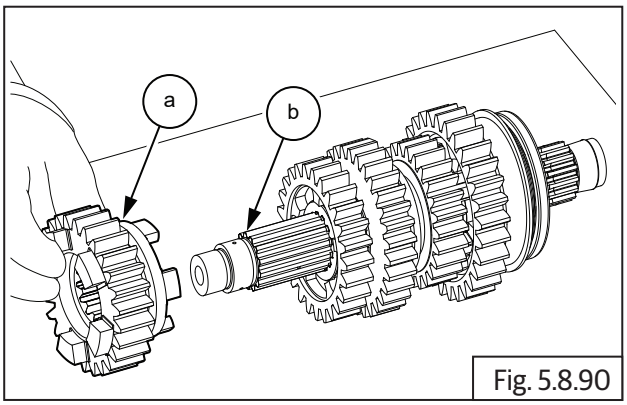

Fig. 5.8.90

- Assemble thrust washer **(a)** on driveshaft **(b)**.

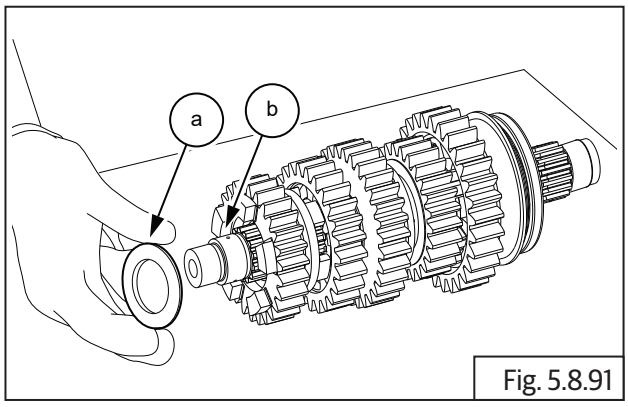

Fig. 5.8.91

- Ensure oil hole in plain bush **(a)** is aligned with oil hole in driveshaft **(b)** and assemble plain bush on driveshaft.

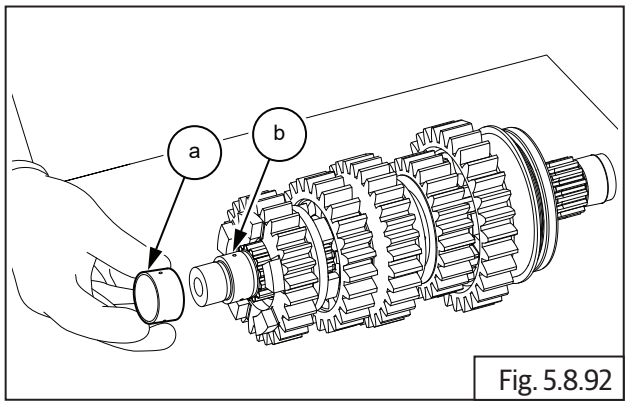

Fig. 5.8.92

NOTE
• *Ensure the bush is fully seated against thrust washer on driveshaft*

- Ensure lugs seating surface of 1st gear is facing lugs of 5th gear; assemble 1st gear **(a)** over bush on driveshaft **(b)**. Ensure the 1st gear is fully seated on bush.

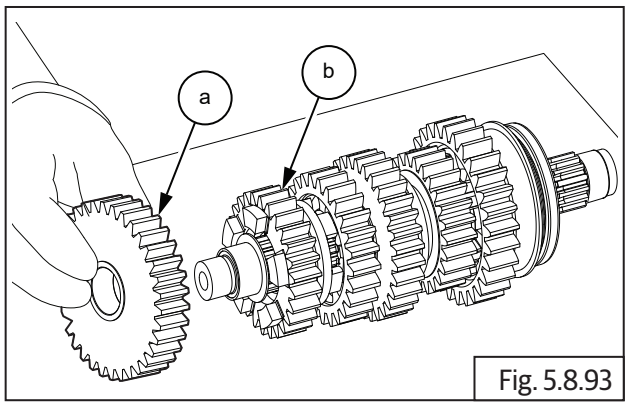

Fig. 5.8.93

- Assemble plain thrust washer **(a)** on driveshaft **(b)** and ensure it is fully seated against the 1st gear.

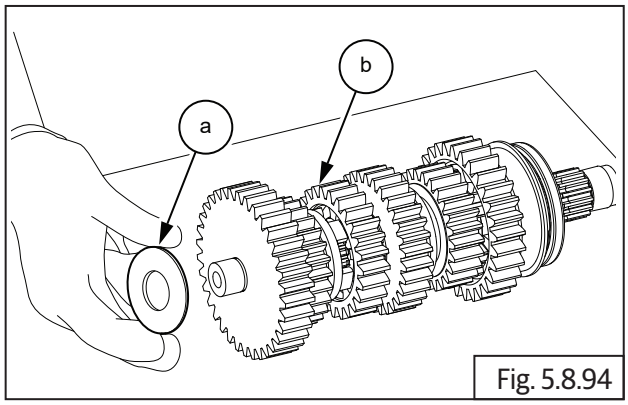

Fig. 5.8.94

- Assemble ball bearing **(a)** on driveshaft **(b)** and ensure it is properly seated against thrust washer on driveshaft.

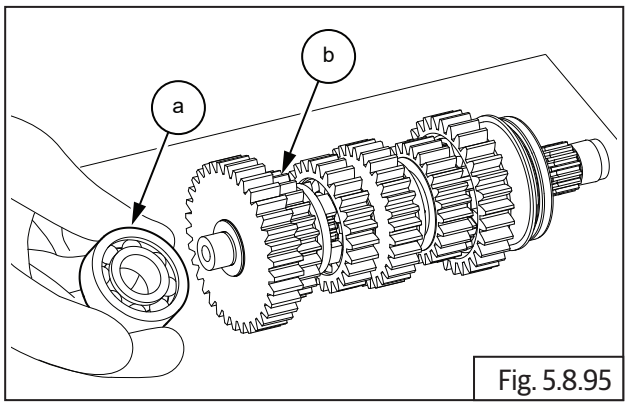

Fig. 5.8.95

- Locate drive shaft assembly with gears on crankcase upper duly ensuring that the splines of the drive shaft are towards the LH side (Magneto side) of upper crankcase and the gears on counter shaft and drive shaft are properly meshed.

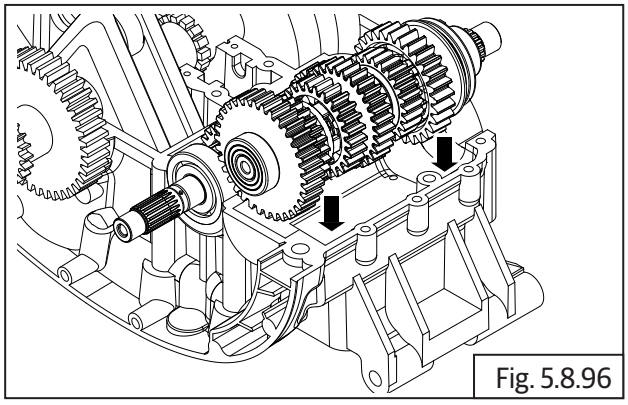
Fig. 5.8.96

Journal bearings in lower crankcse

- Install crankshaft journal bearings into crankcase. Refer journal bearing chart (section 5.7).

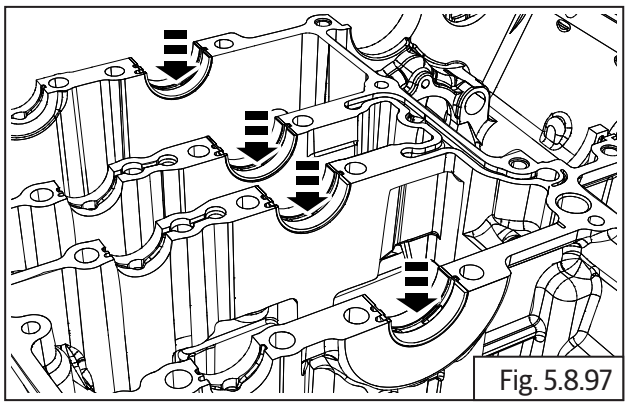
Fig. 5.8.97

83.8.7. Gear Shift Cam Drum

- Assemble needle roller bearing **(a)** in lower crankcase **(b)** from the inside on LH side (Magneto side).
- Insert gear shift cam drum **(c)** into lower crankcase **(b)** from thr RH side (clutch side), duly ensuring the 2 pegs to the gear shift cam drum are towards the RH side (clutch side).

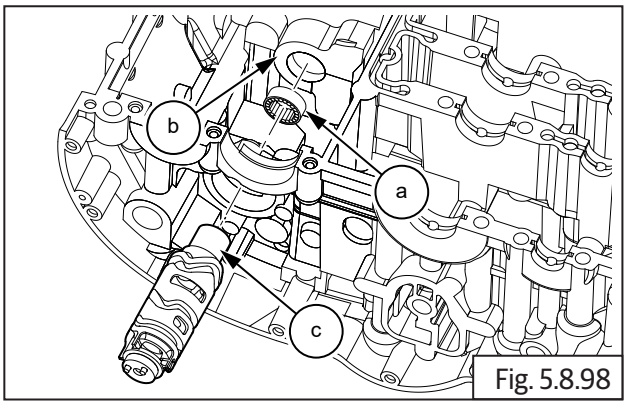

Fig. 5.8.98

SPL	Part No: ST-27543-1
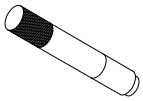	Part Name: Gear shifter Drum NRB Installer

- Assemble big bearing **(a)** on lower crankcase RH side **(b)** (clutch side) over the gear shift cam drum.

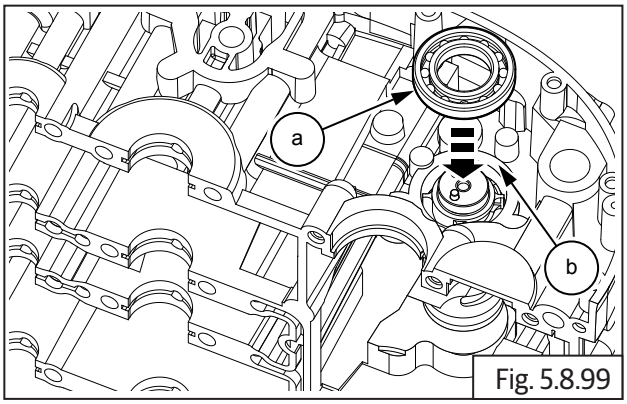

Fig. 5.8.99

- Gently tap on the bearing **(a)** to press fit with crankcase **(b)**.

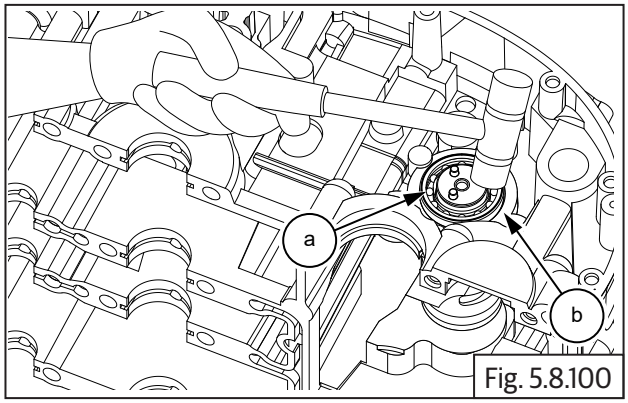

Fig. 5.8.100

	Plastic mallet

NOTE
• *Ensure there is free rotation of gear shift cam drum.*

83.8.8. Shifter fork

- Lubricate the 2 Nos. shifter fork spindles **(a)** and insert them into the lower crankcase from the RH side (Clutch side), till they are just protruding into the crankcase. **Do not insert them fully**.

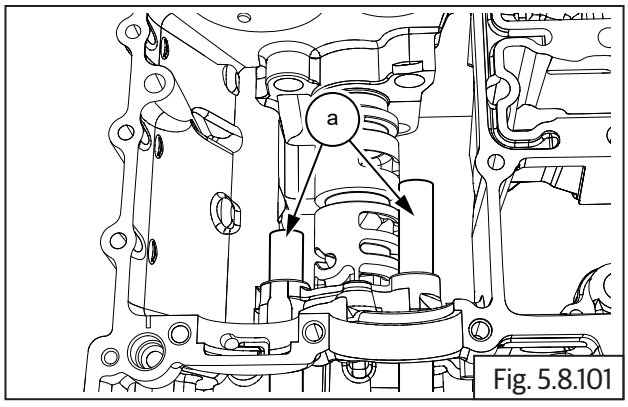

Fig. 5.8.101

- Lubricate and position shifter fork marked "4", inside lower crankcase duly ensuring the small peg **(a)** on the fork is aligned to the central groove in the gear shift drum.

- Ensure the forks **(a)** are facing upwards.

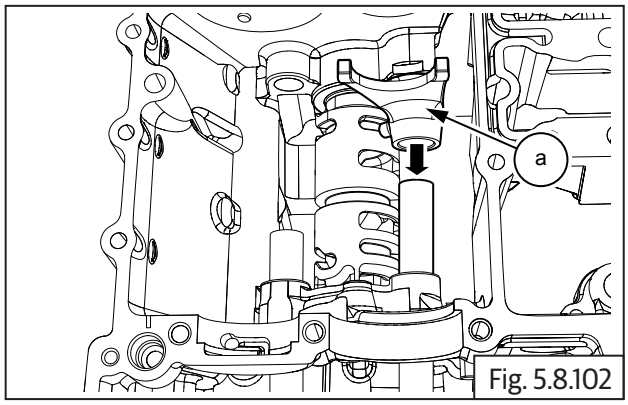

Fig. 5.8.102

- Ensure proper seating of the shifter fork peg in the groove in gear shift drum and press shifter fork spindle fully till it is seated into the boss in lower crankcase.

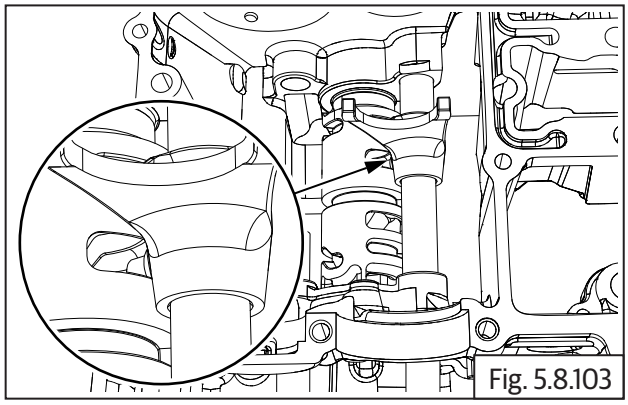
Fig. 5.8.103

- Lubricate and position shifter fork marked "5" inside lower crankcase duly ensuring the small peg **(a)** on the fork is aligned to the outer slot in the gear shift drum. Ensure the forks are facing upwards.

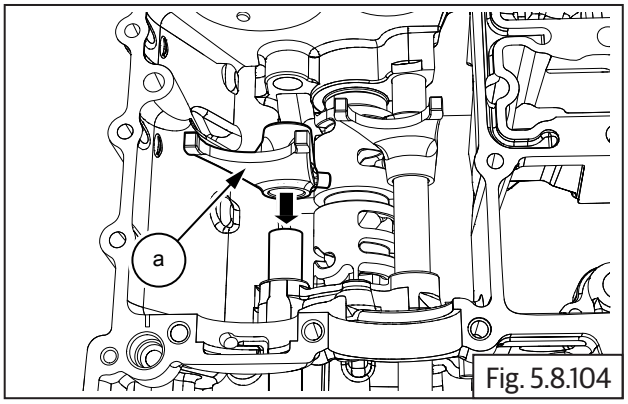

Fig. 5.8.104

- Ensure proper seating of the peg in gear shift drum and press the shifter fork spindle till it is protruding sufficiently outside shifter fork "5".

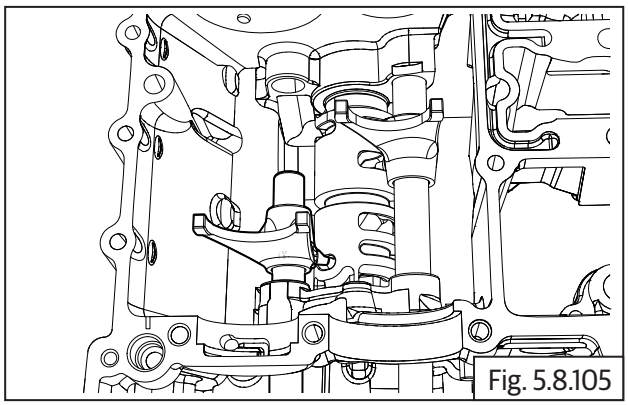
Fig. 5.8.105

- Lubricate and position shifter fork marked "6" inside lower crankcase duly ensuring the small peg **(a)** on the fork is aligned to the slot in the extreme end of the gear shift drum. Ensure the forks are facing upwards.

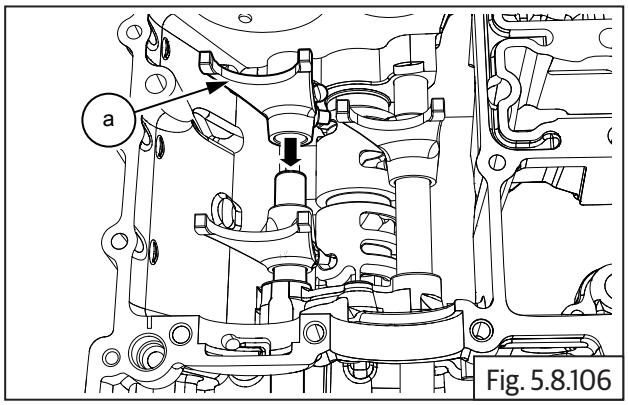

Fig. 5.8.106

- Ensure proper seating of the shifter fork pegs in the respective grooves in gear shift drum and press shifter fork spindle fully till it is seated into the boss in lower crankcase.

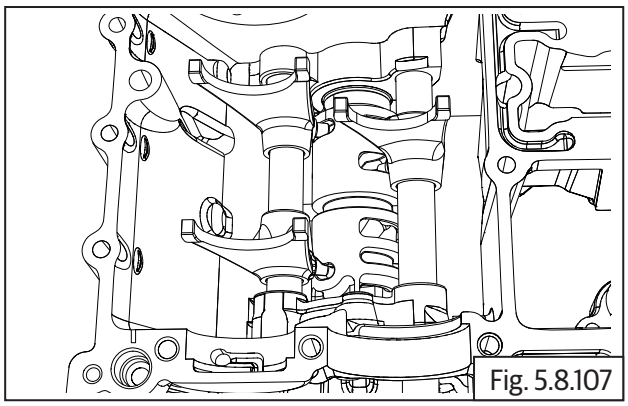
Fig. 5.8.107

- Gently rotate gear shift drum to ensure proper seating of the pegs of all the shifter forks in the respective grooves in gear shift drum.
- Check for free rotation of the gear shift drum and movement of gear shift forks on the spindles.
- Assemble bearing stopper plate **(a)** over the gear shift cam drum ball bearing on lower crankcase on the RH side (clutch side) and ensure the mounting holes are aligned.
- Locate 2 Nos. Hex socket head bolts **(M5) (b)** over the stopper plate and tighten to specified torque.

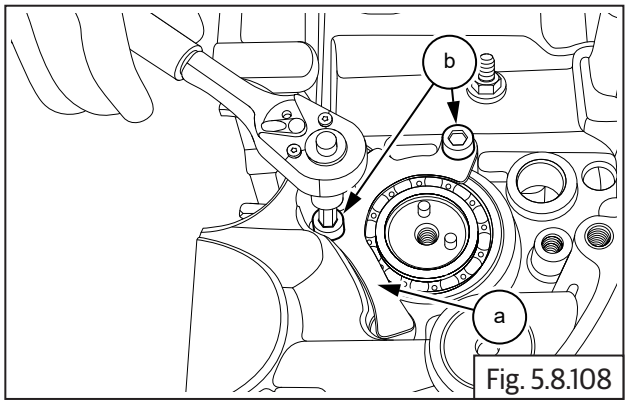

Fig. 5.8.108

	4 mm Allen Socket with Ratchet
Torque	12 N-m/1.2 kgf-m

- Assemble bearing **(a)** and oil seal **(b)** in lower crankcase **(c)** on the LH side (magneto side).

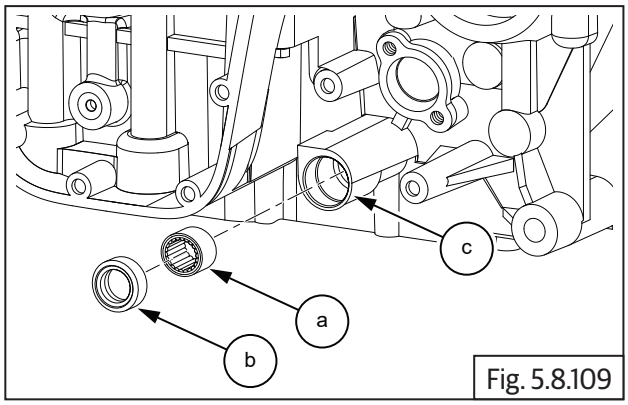

Fig. 5.8.109

83.8.9. Crankcases closing

- Support upper crankcase assembly firmly on suitable wedges with the mating surface facing up.

NOTE
• *Ensure the mating space both upper and lower crankcase are clean and dry.* • *Ensure chain pad is located in the slot in upper crankcase.*

- Apply recommended liquid gasket evenly, on the upper crankcase mating surface.

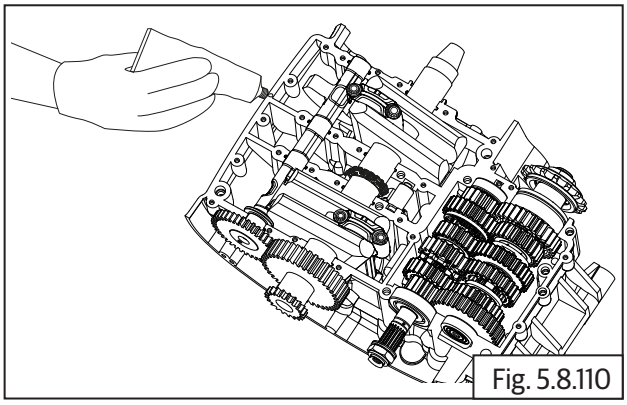

Fig. 5.8.110

- Ensure the 3 Nos. dowels **(a)** are located in the crankcase upper.
- Assemble lower crankcase over upper crankcase and ensure the following:
- The gear shifter forks are positoned in the respective grooves in the gears on mainshaft and countershaft (Rotate gear shifter drum to align the forks against the gears).

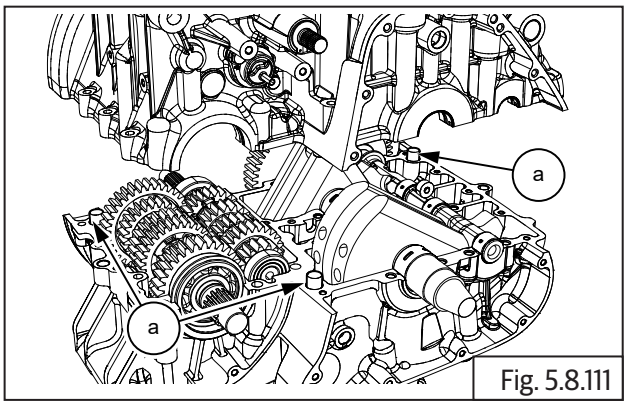

Fig. 5.8.111

- **A. Fasteners on Lower Crankcase**

Fasteners	Quantity
M8 x 1.25 x 80	9
M8 x 1.25 x 150	2
M8 x 1.25 x 120	5

NOTE
• Apply recommended engine oil on the bolt threads and underneath the head of the bolts before inserting into crankcase.

- Ensure lower crankcase is seated fully and uniformly on upper crankcase without any gaps.
- Locate 4 Nos. Hex flange bolts **M8 X 1.25 X 80 (a)** in the mounting holes inside oil sump area in lower crankcase and hand tighten just sufficiently in the sequence shown. **Do not TIGHTEN FULLY**.

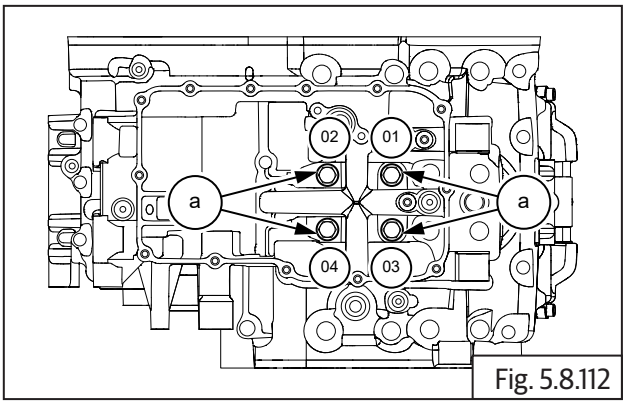

Fig. 5.8.112

	13 mm Socket with Ratchet
1st Torque	10 N-m/1 kgf-m
2nd Torque	20 N-m/2 kgf-m

- Locate 2 Nos. Hex flange bolts **M8 X 1.25 X 150 (a)** in the mounting holes on the lower crankcase RH side (clutch side) and hand tighten just sufficiently in the sequence shown. **Do not TIGHTEN FULLY**.

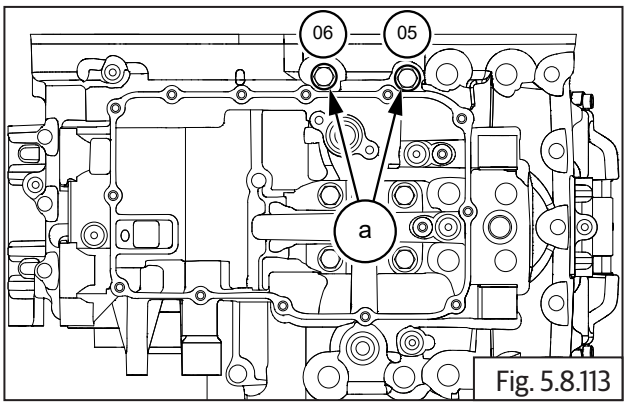

Fig. 5.8.113

	13 mm Socket with Ratchet

- Locate 2 Nos. Hex flange bolts **M8 X 1.25 X 120 (a)** in the mounting holes on the lower crankcase LH side (magneto side) and hand tighten just sufficiently in the sequence shown. **Do not TIGHTEN FULLY**.

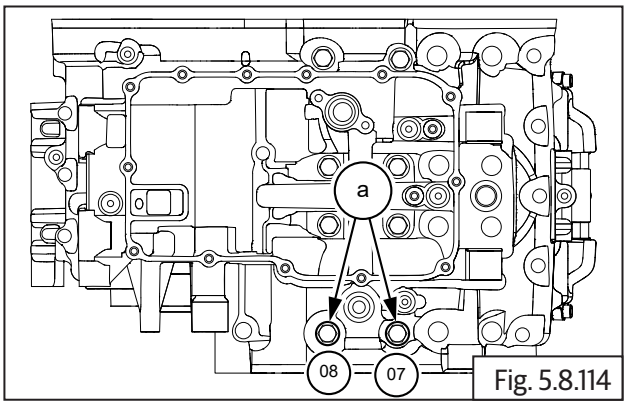

Fig. 5.8.114

	13 mm Socket with Ratchet

- Locate 1 No. Hex flange bolt **M8 X 1.25 X 80 (a)** in mounting hole inside oil sump area in lower crankcase and hand tighten just sufficiently. **Do not TIGHTEN FULLY.**

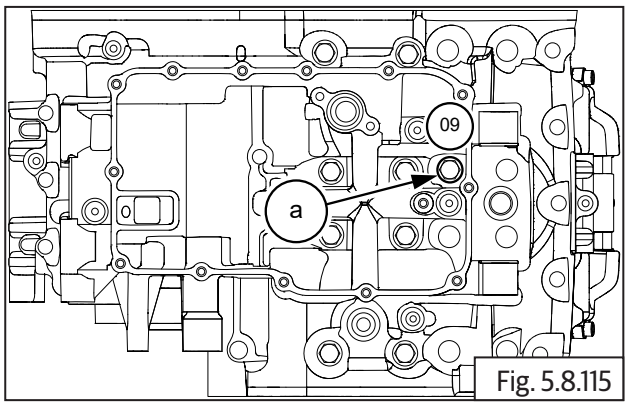

Fig. 5.8.115

	13 mm Socket with Ratchet

- Locate 1 No. Hex flange bolt **M8 X 1.25 X 120 (a)** in the hole in oil filter element area in lower crankcase front side and hand tighten just sufficiently. **Do not TIGHTEN FULLY**.

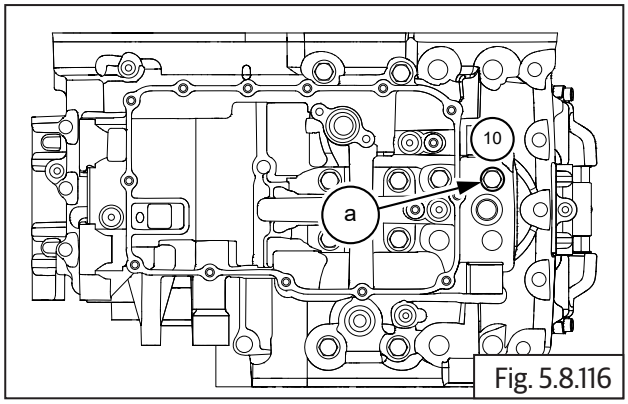

Fig. 5.8.116

	13 mm Socket with Ratchet

- Locate 1 No. Hex flange bolt **M8 X 1.25 X 80 (a)** in mounting hole inside oil sump area in lower crankcase and hand tighten just sufficiently. **Do not TIGHTEN FULLY.**

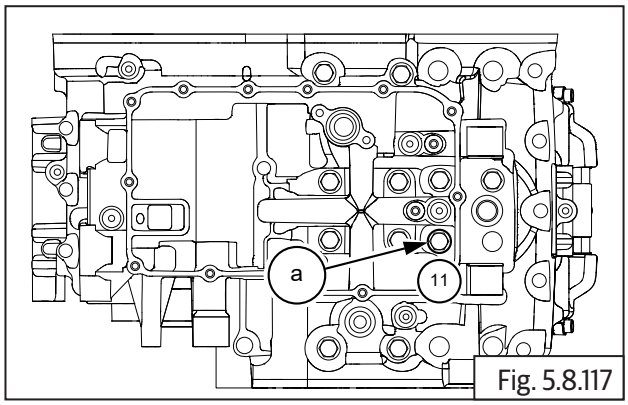

Fig. 5.8.117

	13 mm Socket with Ratchet

- Locate 1 No. Hex flange bolt **M8 X 1.25 X 120 (a)** in the hole in oil filter element area in lower crankcase front side and hand tighten just sufficiently. **Do not TIGHTEN FULLY.**

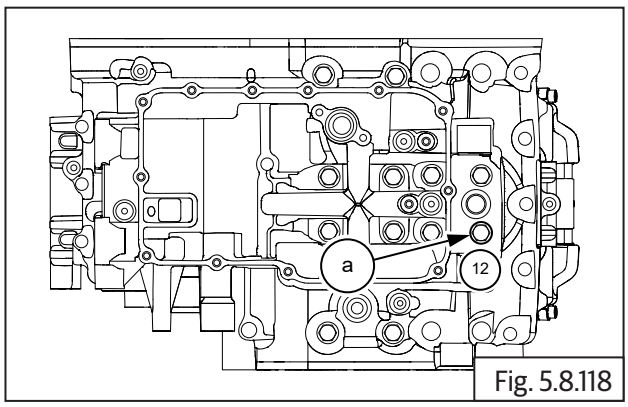

Fig. 5.8.118

	13 mm Socket with Ratchet

- Locate 1 No. Hex flange bolt **M8 X 1.25 X 120 (a)** in the mounting hole on the lower crankcase RH side (clutch side) and hand tighten just sufficiently. **Do not TIGHTEN FULLY**.

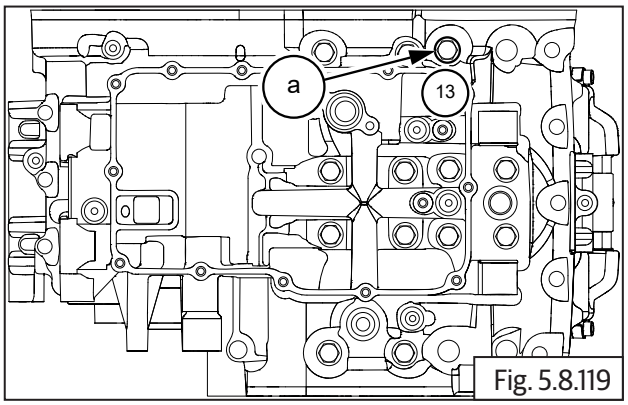

Fig. 5.8.119

	13 mm Socket with Ratchet

- Locate 1 No. Hex flange bolt **M8 X 1.25 X 80 (a)** in the mounting hole on the lower crankcase RH side (clutch side) and hand tighten just sufficiently. **Do not TIGHTEN FULLY**.

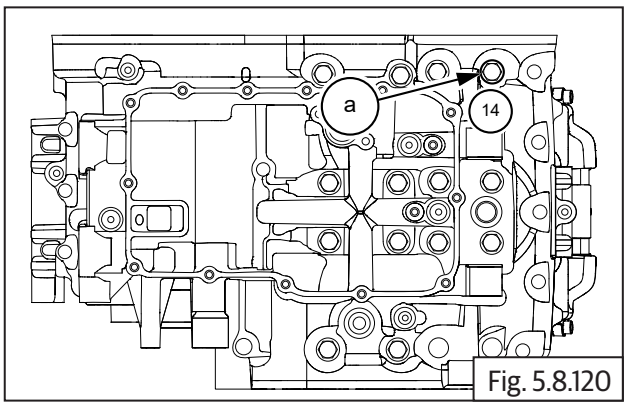

Fig. 5.8.120

	13 mm Socket with Ratchet

- Locate 2 Nos. Hex flange bolts **M8 X 1.25 X 80 (a)** in the mounting holes on the lower crankcase LH side (magneto side) and hand tighten just sufficiently. **Do not TIGHTEN FULLY**.

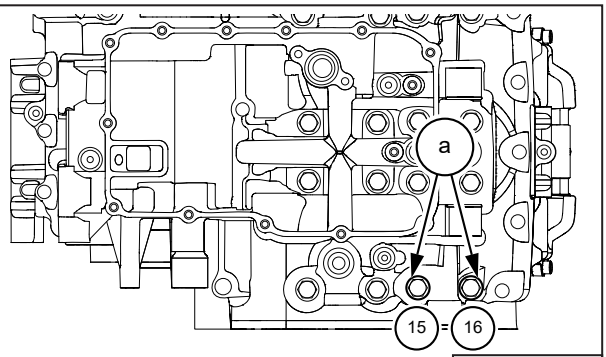

Fig. 5.8.121

	13 mm Socket with Ratchet

- Tighten the 16 Nos. Hex flange bolts **M8 X 1.25**, as mentioned in the sequence below.

  Initially the bolts are first torqued evenly.

  Subsequently a second torque is applied evenly.

  Finally angle torqued as specified below.

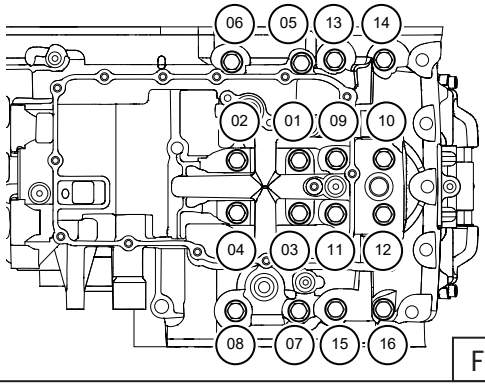

Fig. 5.8.122

	13 mm Socket with Ratchet
1st Torque	10 N-m/1 kgf-m
2nd Torque	20 N-m/2 kgf-m

Bolt Location	Torque degrees
1 - 2 - 3 - 4 - 9 - 11 - 14 - 15 - 16	65° (deg)
7 - 8 - 10 - 12 - 13	110° (deg)
5 - 6	140° (deg)

- **B. Fasteners on upper Crankcase**

Fasteners	Quantity
M8 x 1.25 x 105	2
M8 x 1.25 x 45	1
M8 x 1.25 x 80	3
M6 x 1.25 x 35	1

- Gently invert the crankcase assembly such that the lower crankcase is resting firmly on suitable wedges.

- Locate 1 No. Hex flange bolt **M8 X 1.25 X 105 (a)** before oil filler hole area in upper crankcase RH side (clutch side) and hand tighten just sufficiently. **Do not TIGHTEN FULLY**.

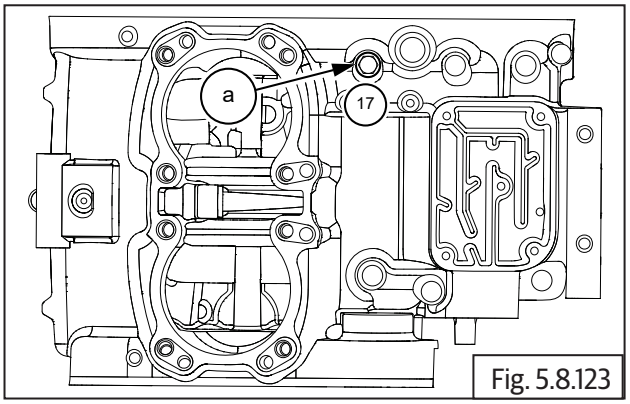

Fig. 5.8.123

	13 mm Socket with Ratchet

- Locate 1 No. Hex flange bolt **M8 X 1.25 X 45 (a)** in the front mounting hole in the starter motor recess in upper crankcase LH side (magneto side) and hand tighten just sufficiently. **Do not TIGHTEN FULLY.**

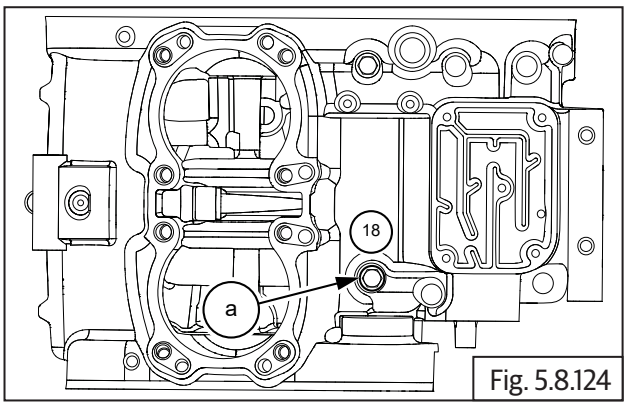

Fig. 5.8.124

	13 mm Socket with Ratchet

- Locate 1 No. Hex flange bolt **M8 X 1.25 X 105 (a)** behind oil filler hole area in upper crankcase RH side (clutch side) and hand tighten just sufficiently. **Do not TIGHTEN FULLY**.

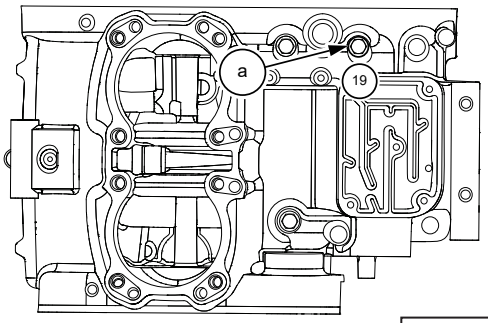

Fig. 5.8.125

	13mm Socket with Ratchet

- Locate 1 No. Hex flange bolt **M8 X 1.25 X 80 (a)** in the rear mounting hole in the starter motor recess in upper crankcase LH side (magneto side) and hand tighten just sufficiently. **Do not TIGHTEN FULLY**.

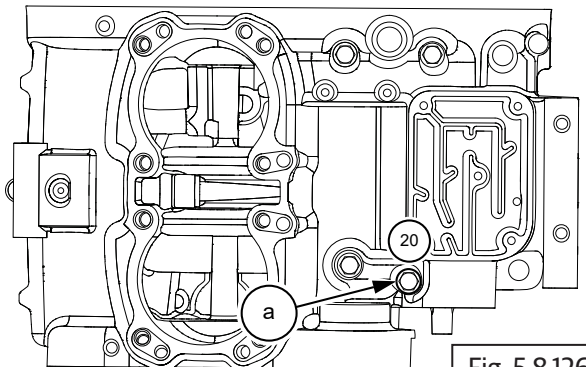

Fig. 5.8.126

	13 mm Socket with Ratchet

- Locate 2 Nos. Hex flange bolt **M8 X 1.25 X 80 (a)** on the LH and RH sides of the breather box housing assembly in the rear end of upper crankcase and hand tighten just sufficiently. **Do not TIGHTEN FULLY.**

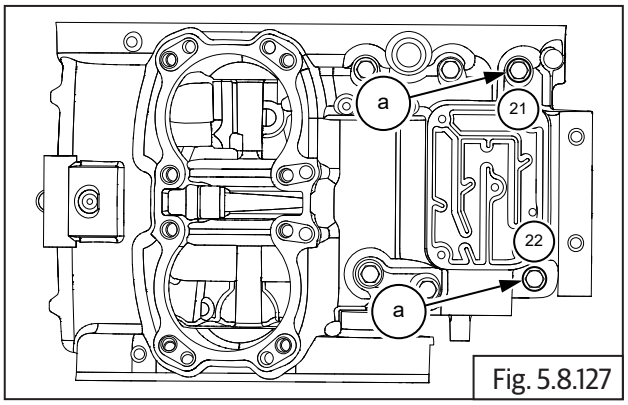

Fig. 5.8.127

	13 mm Socket with Ratchet

- Locate 1 No. Hex flange bolt **M6 X 1 X 35 (a)** at the rear end of upper crankcase RH side (Clutch side) and hand tighten just sufficiently. **Do not TIGHTEN FULLY.**

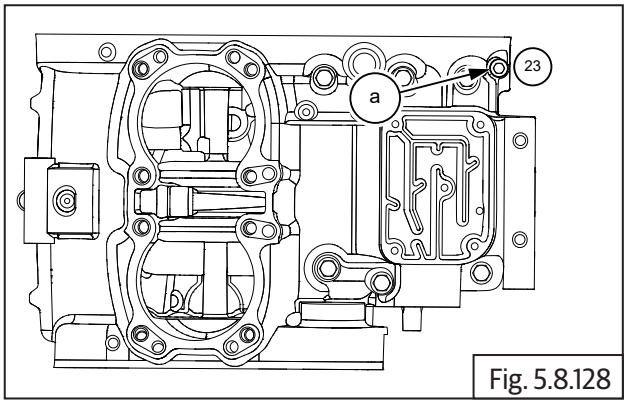

Fig. 5.8.128

	8 mm Socket with Ratchet

- Tighten the 7 Nos. Hex flange bolts on upper crankcase as mentioned in the sequence detailed below, to the specified torques.

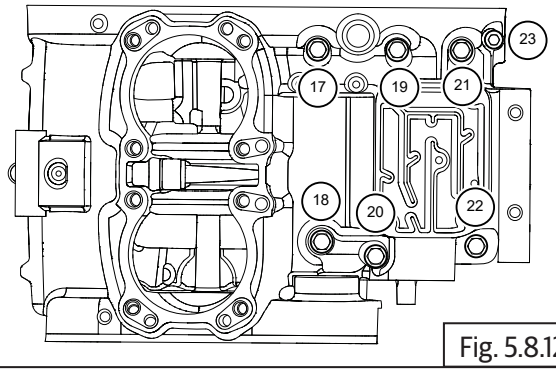

Fig. 5.8.129

Bolt Location	Size	Torque Value
17-22	13mm Socket & Torque wrench	24-28 Nm (2.4-2.8 Kgf-m)
23	8 mm Socket & Torque wrench	9-12 Nm (0.9-1.2 Kgf-m)

- **C. Fasteners on Lower Crankcase**

Fasteners	Quantity
M6 x 1.25 x 85	1
M6 x 1.25 x 35	8
M6 x 1.25 x 55	1

- Gently invert the crankcase assembly such that the upper crankcase is resting firmly on suitable wedges.
- Locate 1 No. Hex flange bolt **M6 X 1 X 85 (a)** in mounting hole inside oil sump area in lower crankcase and hand tighten just sufficiently. **Do not TIGHTEN FULLY**.

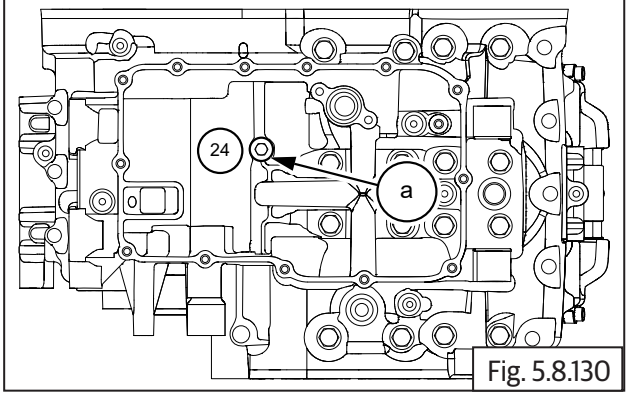

Fig. 5.8.130

	8 mm Socket with Ratchet

- Locate 1 No. Hex flange bolt **M6 X 1 X 35 (a)** in mounting hole the front LH side (magneto side) in lower crankcase and hand tighten just sufficiently. **Do not TIGHTEN FULLY**.

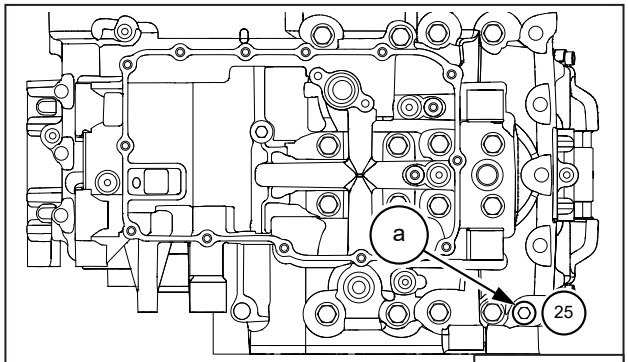

Fig. 5.8.131

	8 mm Socket with Ratchet

- Locate 1 No. Hex flange bolt **M6 X 1 X 55 (a)** in mounting hole on the LH side , behind magneto housing, in lower crankcase and hand tighten just sufficiently. **Do not TIGHTEN FULLY**.

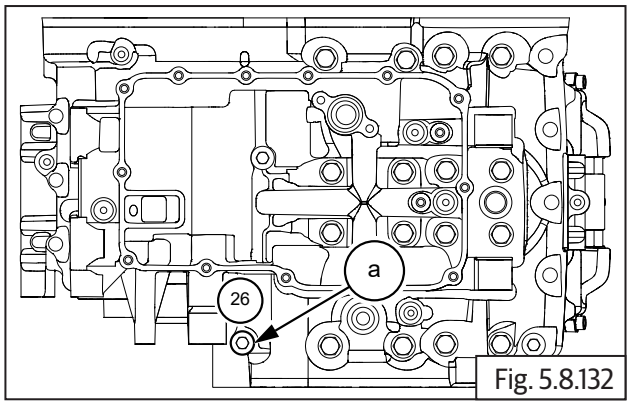

Fig. 5.8.132

	8 mm Socket with Ratchet

- Locate 7 Nos. Hex flange bolts **M6 X 1 X 35 (a)** 4 Nos. bolts in the front mounting holes and 3 Nos. bolts in the rear mounting holes in lower crankcase and hand tighten just sufficiently. **Do not TIGHTEN FULLY**.

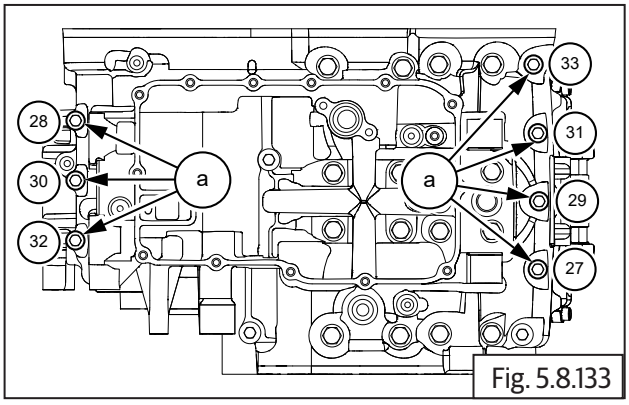

Fig. 5.8.133

	8 mm Socket with Ratchet

- Tighten the 10 Nos. Hex flange bolts , as mentioned in the sequence below,

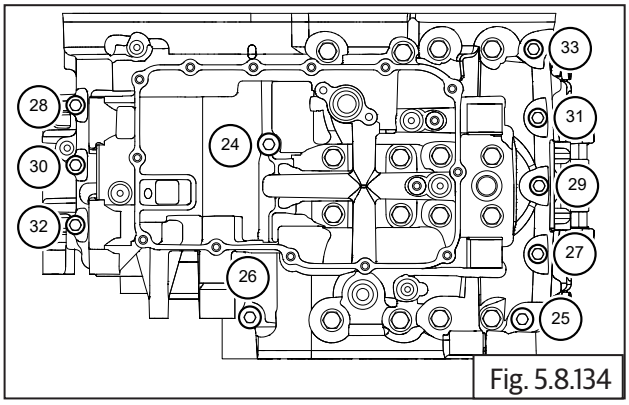

Fig. 5.8.134

	8mm Socket with Torque wrench
1st Torque	9 - 12 N-m/0.9 - 1.2 kgf-m

83.8.10. Oil Pressure Switch

- Assemble oil pressure switch **(a)** along with washer **(b)** on crankcase. **Do not TIGHTEN FULLY**.

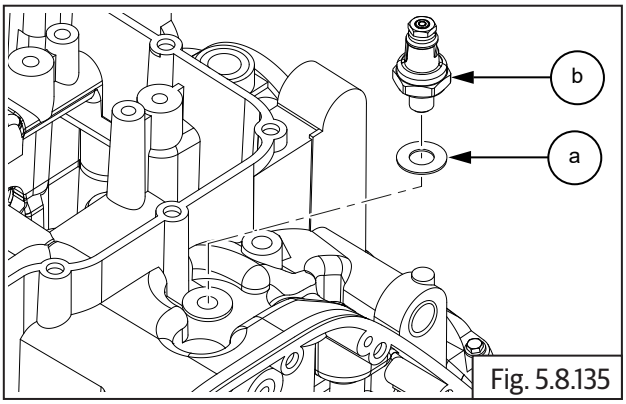

Fig. 5.8.135

- Tighten oil pressure switch **(a)** to specified torque.

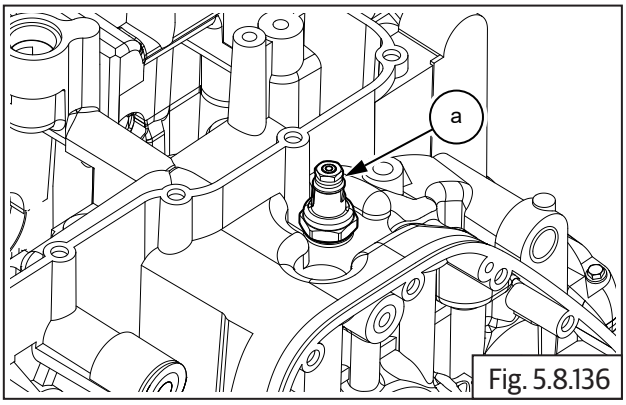

Fig. 5.8.136

	21 mm Double end spanner
Torque	12 N-m/1.2 kgf-m

83.8.11. Oil Bypass

- Ensure O-rings **(a)** are located properly.
- Install oil bypass pipe **(b)** into lower crankcase oil gallery.

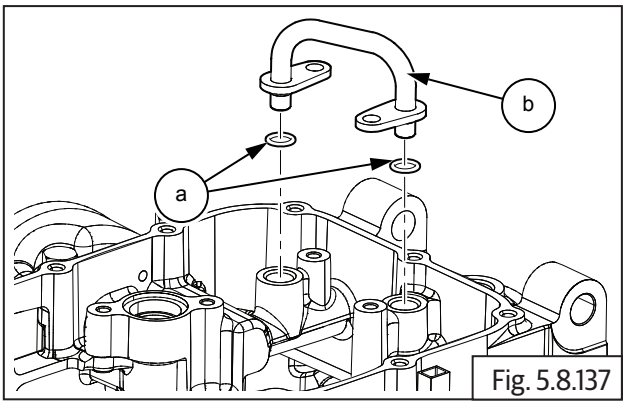

Fig. 5.8.137

- Tighten 2 Nos. Hex socket head screw **(M6) (a)** to specified torque.

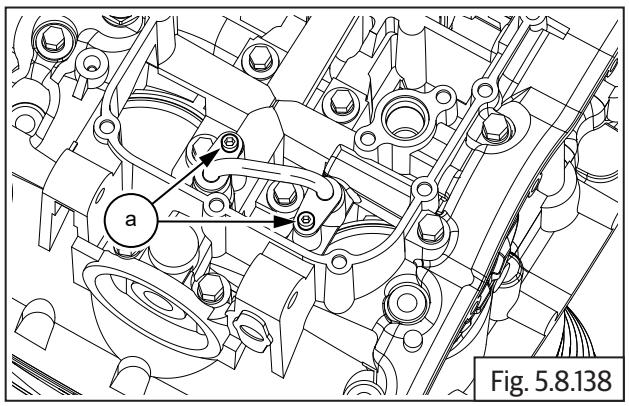

Fig. 5.8.138

	5 mm Allen socket with Ratchet
Torque	12 N-m/1.2 kgf-m

83.8.12. Oil Strainer

- Ensure O-ring is located properly.
- Install oil strainer **(a)** into lower crankcase oil gallery and tighten with 2 Nos. Hex flange head bolts **(M6) (b)** to specified torque.

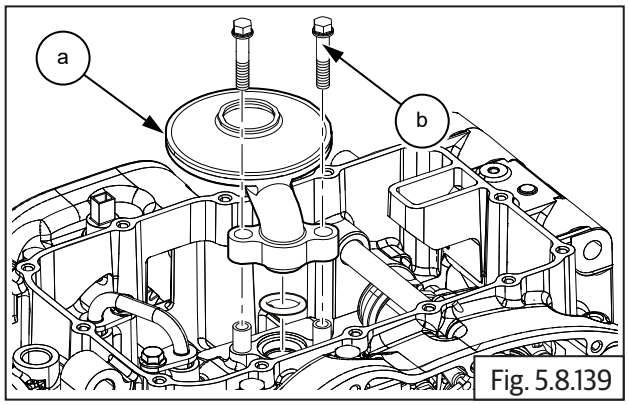

Fig. 5.8.139

	10 mm Socket with Ratchet
Torque	12 N-m/1.2 kgf-m

83.8.13. Oil Pan

- Locate oil pan gasket **(a)** on crankcase and assemble oil pan **(b)**.

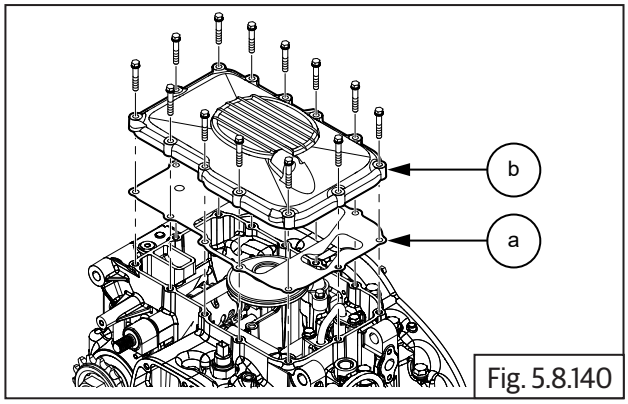

Fig. 5.8.140

- Assemble and tighten 13 Nos. Hex flange head bolts **(M6) (a)** in crisscross pattern to specified torque.

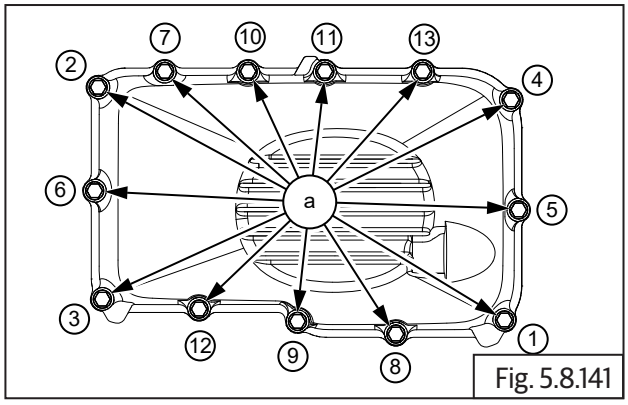

Fig. 5.8.141

	10 mm Socket with Ratchet
Torque	12 N-m/1.2 kgf-m

NOTE
• *Rotate the crankcase so that the connecting rods are facing upwards for further assembly.*
• *Support timing chain suitably to ensure it does not fall into the crankcase while rotating.*

83.8.14. Drain Plug

- Assemble magnetic drain plug **(M14) (a)** along with washer **(b)**.

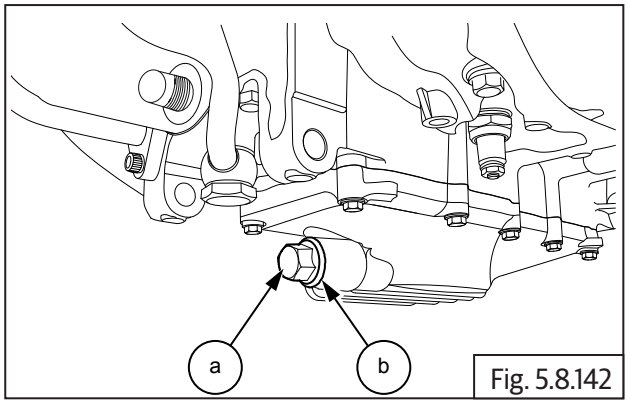

Fig. 5.8.142

- Tighten drain plug **(a)** to specified torque.

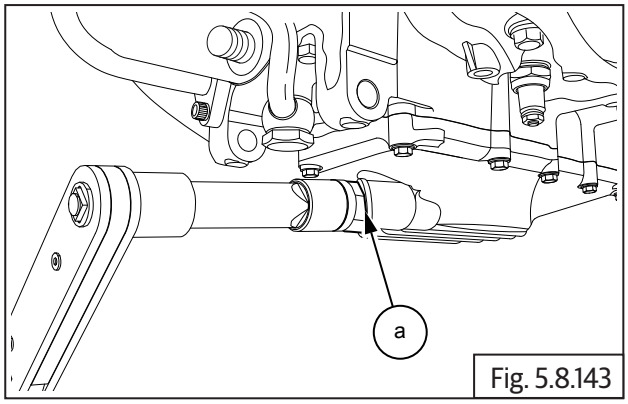

Fig. 5.8.143

	19 mm Socket with Ratchet and Torque wrench
Torque	35 N-m/3.5 kgf-m

83.8.15. Pistons and Rings

NOTE
• *Rings should be assembled with proper orientation (top marking should be always towards 1st ring end gap should be 45° before "EX" mark on piston crown).*
• *Middle 2nd ring end gap should be 180° from 1st ring end gap.*
• *Oil ring 3rd top rail end gap should be 180° from 2nd ring end gap (45° before "EX" on piston crown).*
• *Oil ring spacer end gap should be 45° before 3rd ring top rail end gap (90° before "EX" on piston crown).*
• *Oil ring (3rd) bottom rail end gap should be 180° from 3rd ring top rail end gap.*
• *One of the circlip should be assembled on the inner side of piston.*

Piston Rings

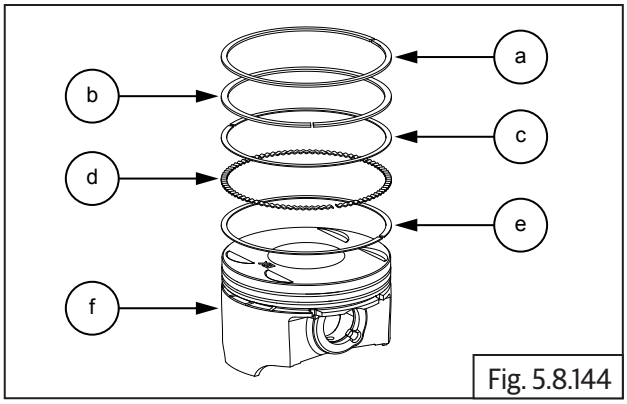

Fig. 5.8.144

a	Top ring
b	Middle ring
c	Oil ring top rail
d	Oil ring spacer
e	Oil ring bottom rail
f	Piston

Orientation Pattern

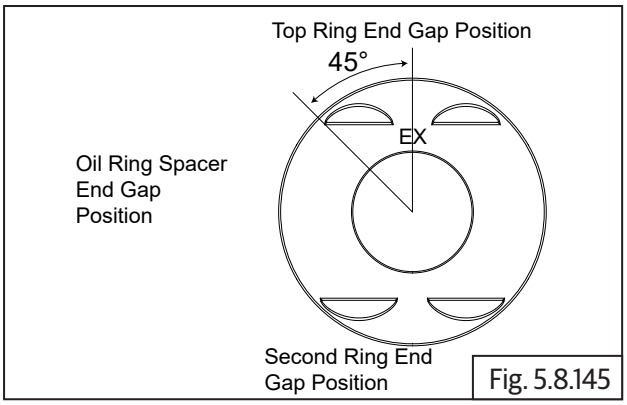

Fig. 5.8.145

- Top ring (1st) and oil ring (3rd) top rail end gap positions.

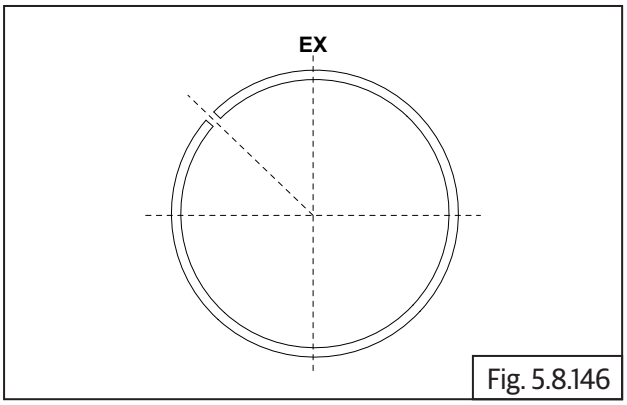

Fig. 5.8.146

- Middle (2nd) ring and oil ring (3rd) bottom rail end gap positions.

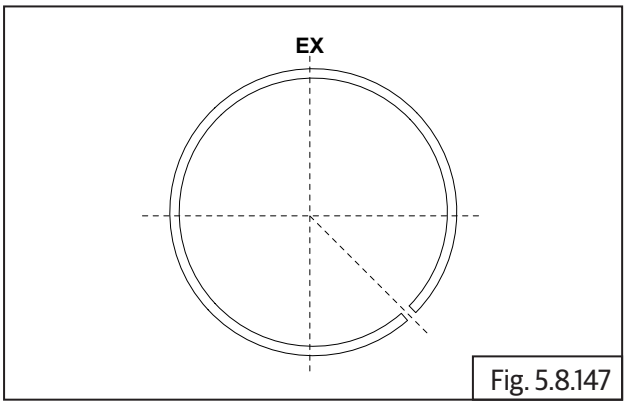

Fig. 5.8.147

- Oil ring spacer end gap position .

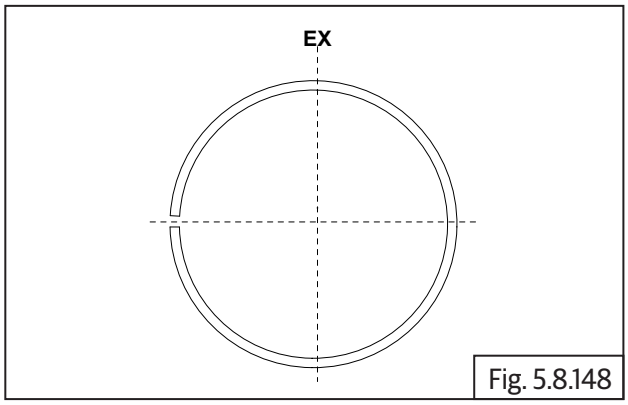

Fig. 5.8.148

83.8.16. Cylinder Barrel Dowels on Crankcase

- Install 2 Nos. dowel pins **(a)** and **(b)** on upper crankcase.

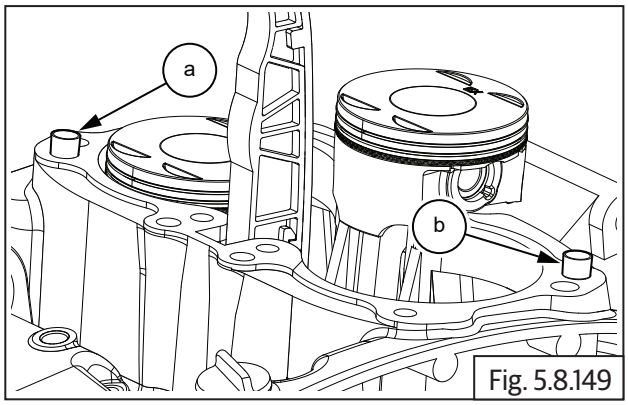

Fig. 5.8.149

83.8.17. Cylinder Barrel Gasket on Crankcase

- Ensure the gasket seating area in crankcase is clean.
- Ensure cam chain is routed through a new cylinder base gasket **(a)** and locate the gasket on crankcase **(b)**.
- Ensure proper seating of the gasket on the dowels on the crankcase.

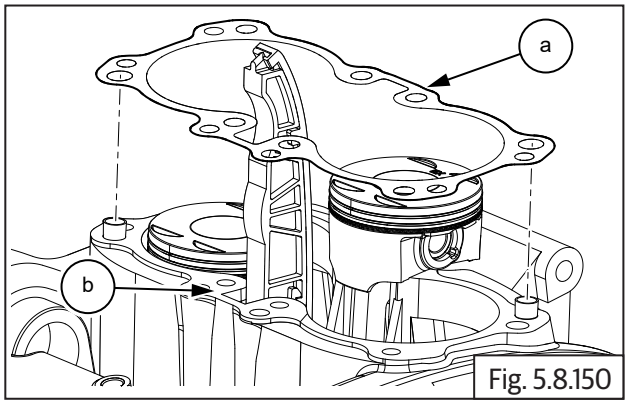

Fig. 5.8.150

83.8.18. Piston LH in Cylinder Barrel

- Ensure piston LH is at its top most position by rotating crankshaft clockwise.
- Locate special tool **(a)** on piston LH.

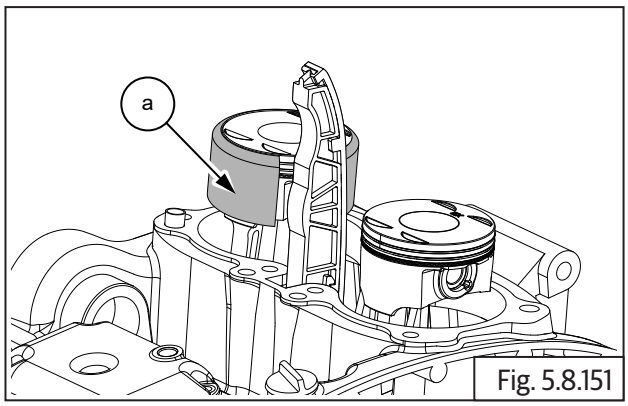

Fig. 5.8.151

SPL	Part No: ST30296/a
	Part Name: Piston ring compressor

- Position and hold cylinder barrel above crankcase, route cam chain through cylinder barrel bottom and ensure it is supported firmly and suitably at the top.
- Ensure cylinder barrel LH is well lubricated, LH piston is held firmly and straight.
- Gently lower cylinder barrel **(a)** over the special tool piston LH, till the piston is halfway into the cylinder barrel.

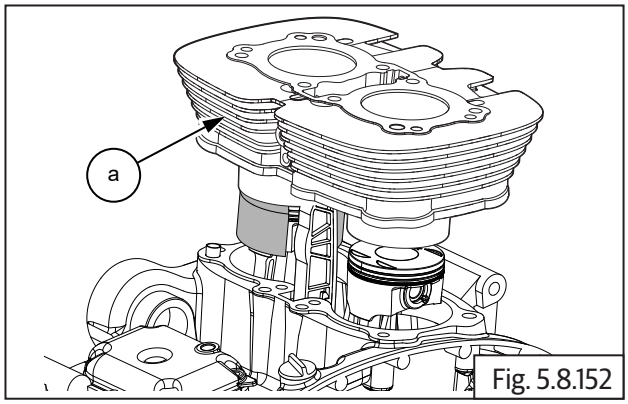

Fig. 5.8.152

- Hold cylinder barrel firmly in suspended position and remove the special tool **(a)** from piston LH.

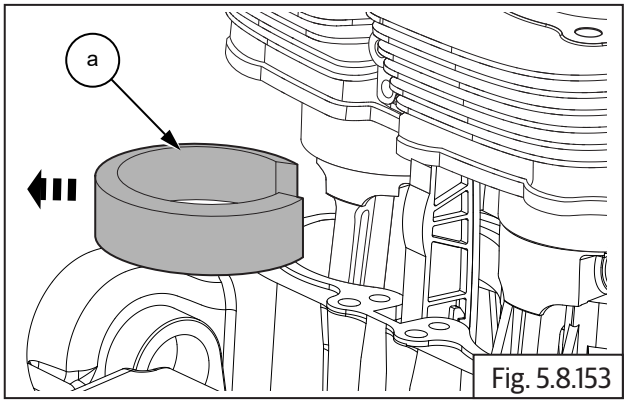

Fig. 5.8.153

SPL	Part No: ST30296/a
	Part Name: Piston ring compressor

83.8.19. Piston RH in Cylinder Barrel

- Ensure cylinder barrel RH is well lubricated, RH piston is at its top most position, held firmly and straight.
- Locate special tool over piston RH.

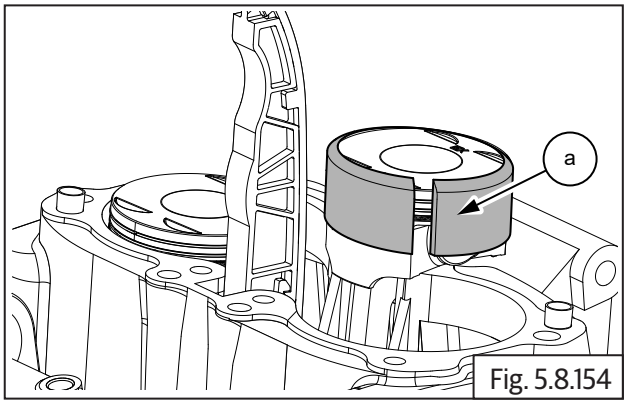

Fig. 5.8.154

SPL	Part No: ST30296/a
	Part Name: Piston ring compressor

- Gently lower cylinder barrel **(a)** till piston RH is halfway into the cylinder barrel.

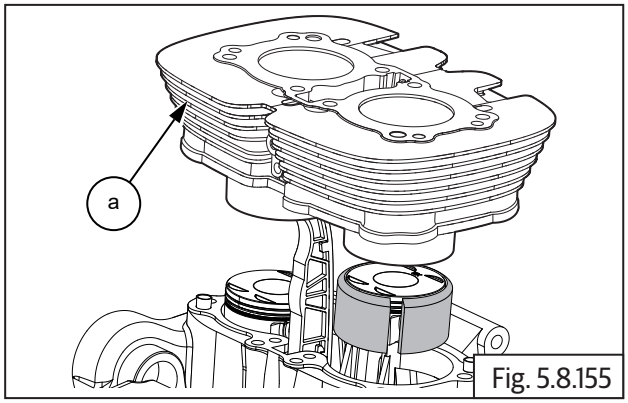

Fig. 5.8.155

- Hold cylinder barrel firmly in suspended position and remove the special tool **(a)** from piston RH.

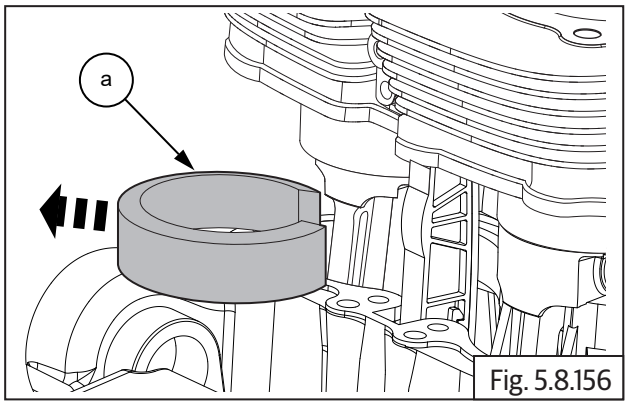

Fig. 5.8.156

SPL 	Part No: ST30296/a
	Part Name: Piston ring compressor

- Gently lower cylinder barrel further, till it is firmly seated on the crankcase.
- Locate 2 Nos. dowel pins **(a)** on cylinder barrel and ensure they are seated properly.

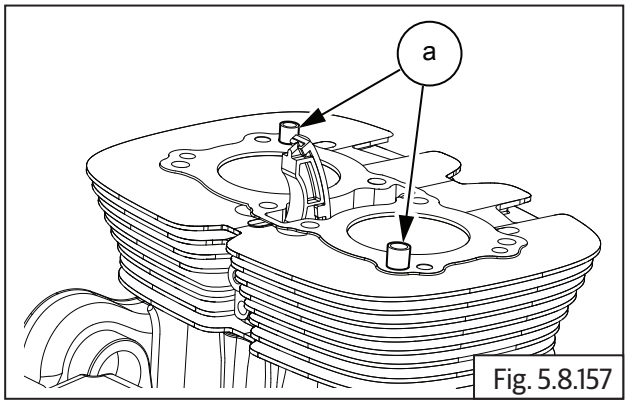

Fig. 5.8.157

83.8.20. Cylinder Head Gasket on Cylinder Barrel

- Ensure the gasket seating surface on cylinder barrel is clean.
- Ensure4 cam chain is routed through a new cylinder head gasket.
- Locate new head gasket **(a)** on cylinder barrel and ensure it is properly seated on the dowel pins and cylinder barrel.

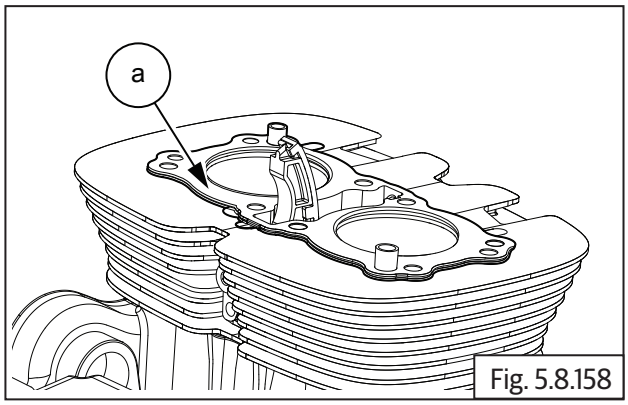

Fig. 5.8.158

83.8.21. Floating Chain Pad

- Hold timing chain **(a)** suitably and insert chain pad **(b)** into cylinder barrel with the chain contact area facing inside.

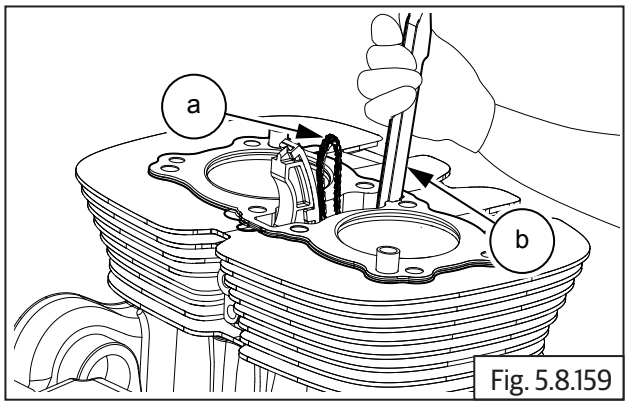

Fig. 5.8.159

⚠ CAUTION

Ensure floating chain pad seating correctly in the crankcase and free radial movement.

Components in Cylinder Head

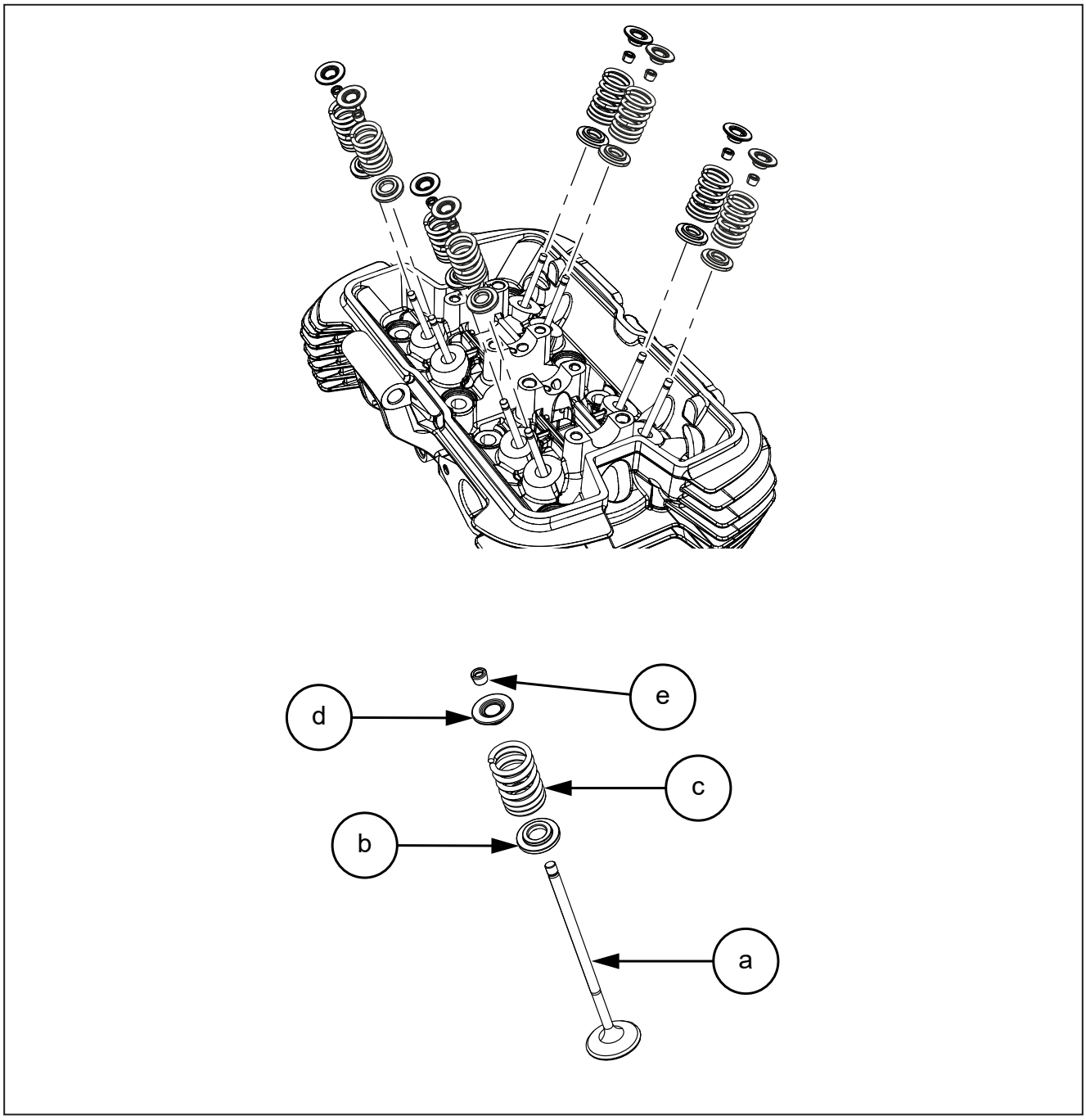

Item No.	Description	Quantity
a	Valve Stem	1
b	Spring Seat	1
c	Valve Spring	1
d	Collar	1
e	Cotter	1

83.8.22. Components in Cylinder Head

Valves and Springs

- Install 8 Nos. valve stem seals **(b)** on the 8 Nos. valve guides **(a)**.

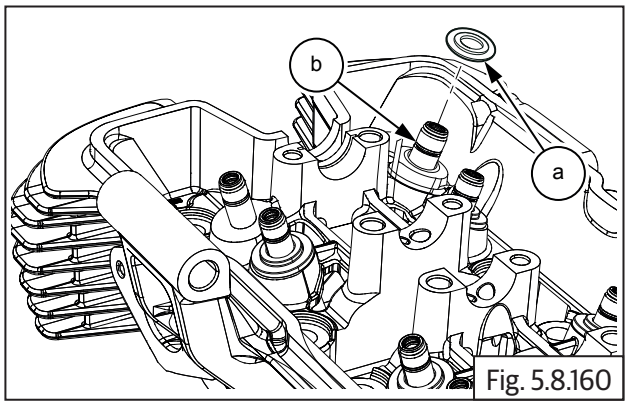

Fig. 5.8.160

- Lubricate and insert the valves **(a)** into the valve guides inside cylinder head **(b)**.

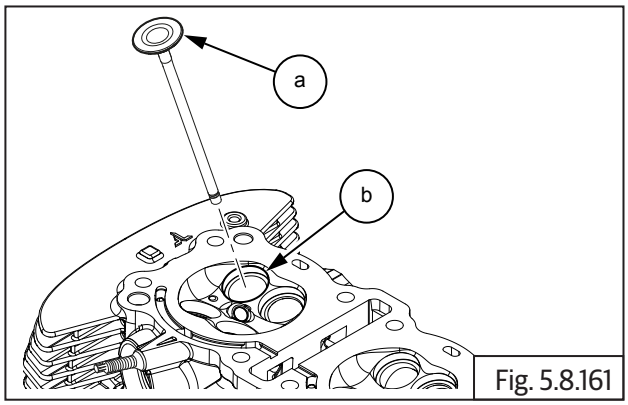

Fig. 5.8.161

- Support the valve inside cylinder head and assemble valve spring **(a)** over valve stem **(b)** in the outer area of the cylinder head.

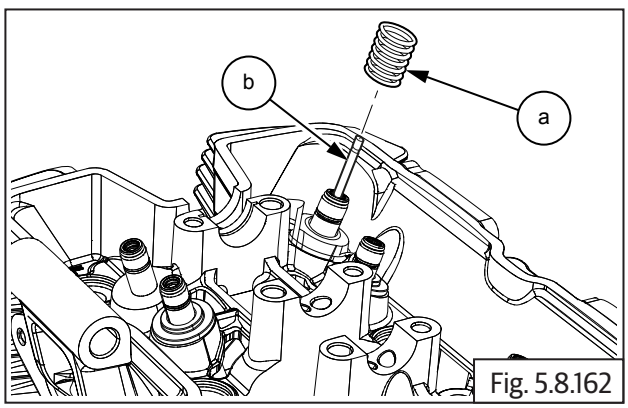

Fig. 5.8.162

- Insert collar **(a)** above valve spring **(b)**.

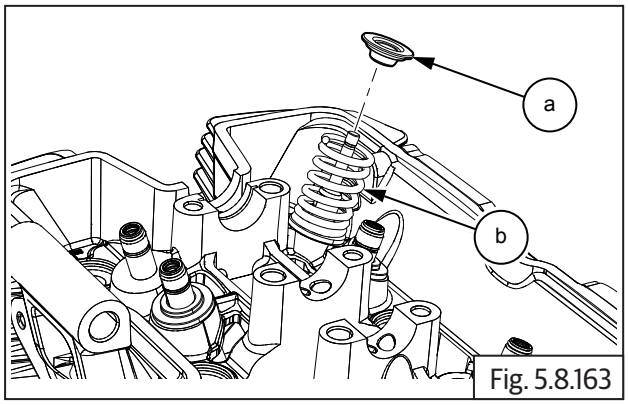

Fig. 5.8.163

- Locate special tool on the valve such that the threaded screw end of the tool is seated centrally on the valve inside the cylinder head and the other end is seated on the valve spring collar on the outer side of the cylinder head.
- Compress valve spring with special tool **(a)** by "hand tightening" the threaded screw of the special tool gently, till it locks against the valve**.**

⚠ CAUTION

Do not overtighten the special tool as it will damage both the valve seating surface and the special tool.

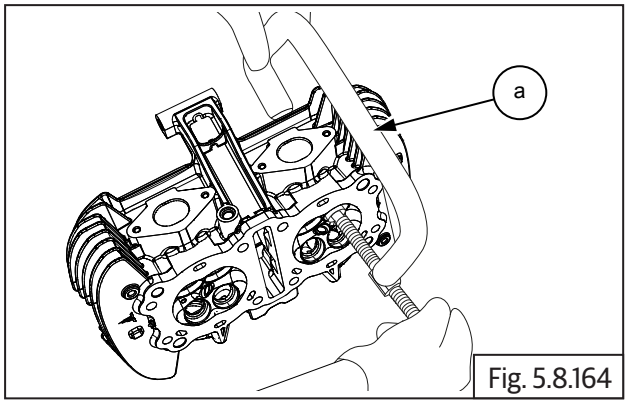

Fig. 5.8.164

SPL	Part No: ST-27528-2
	Part Name: Valve spring compressor

- Locate two split cotters **(a)** on the collar with their tapered end facing inside and the flat edges seated against the valve stem top portion.

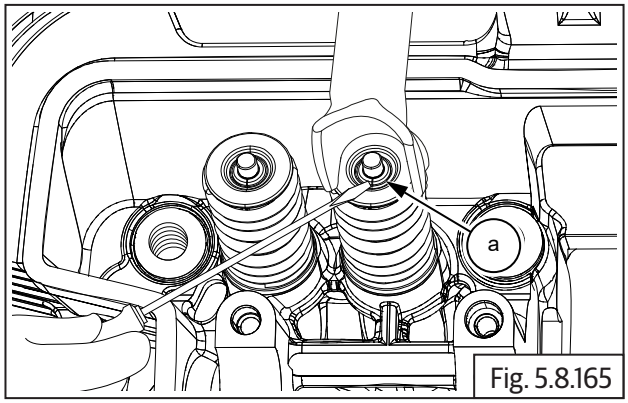

Fig. 5.8.165

SPL 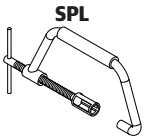	Part No: ST-27528-2
	Part Name: Valve spring compressor

- Gently and slowly release special tool by unscrewing the threaded shaft, duly ensuring the valve cotters are locked in place on the valve stem and the tapered surfaces of the cotters are inside the valve spring collar.
- Remove special tool **(a)** from the valve.

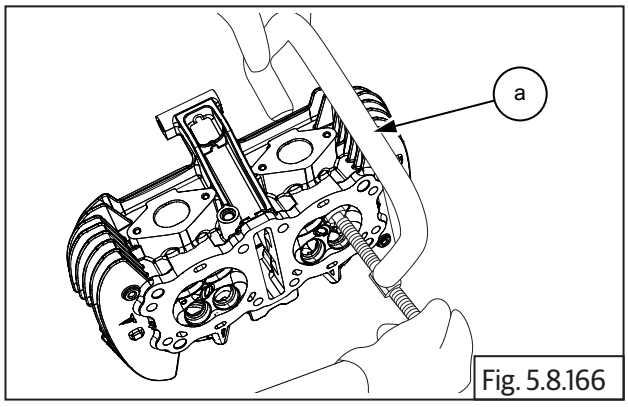

Fig. 5.8.166

- Repeat the above process to install the other seven valves, springs, collars and cotters on the cylinder head.

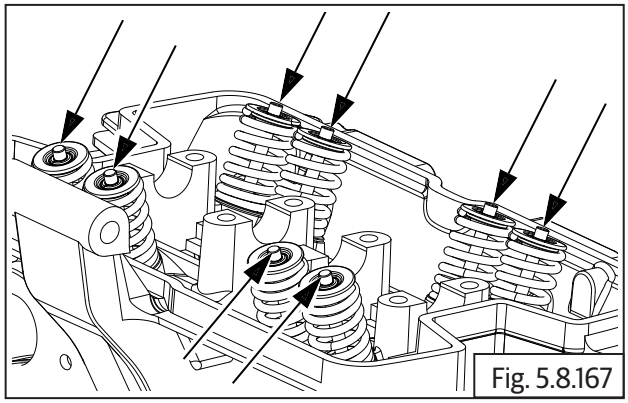
Fig. 5.8.167

83.8.23. Cylinder Head on Cylinder Barrel

Cylinder head assembly on cylinder barrel

- Position cylinder head over the barrel such that the exhaust ports are facing towards the front and inlet ports are towards the rear of the engine.
- Ensure the 2 Nos. dowels **(a)** and cylinder head gasket are located on the cylinder barrel.
- Ensure the cam chain pads are positioned correctly and route the cam chain from the lower side of the cylinder head to the top.
- Support cam chain suitably to prevent it from falling into cylinder head.

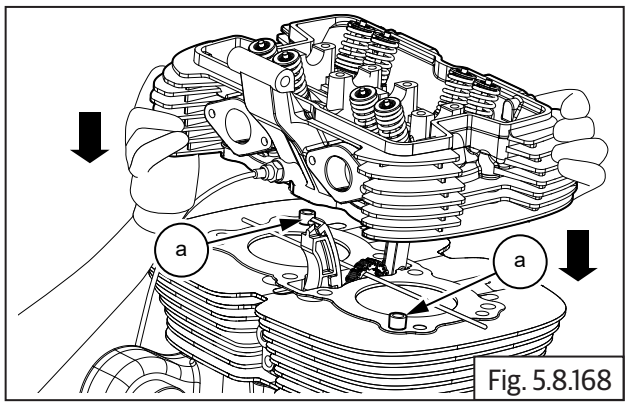

Fig. 5.8.168

⚠ CAUTION

Cylinders bolts are pre-coated and hence should be used one time only. Do not reuse.

- Locate new 8 Nos. Hex flange head bolts **(M10) (a)** along with washers on the cylinder head.

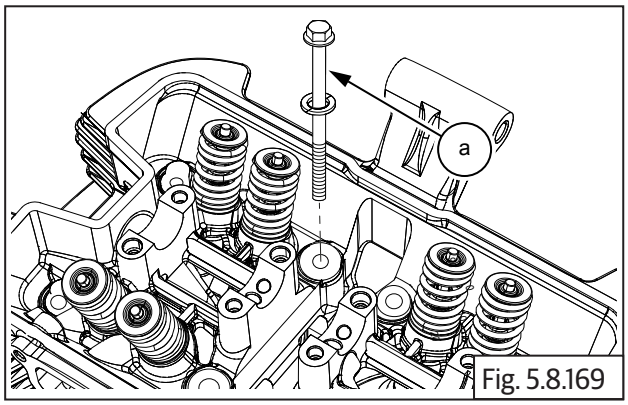

Fig. 5.8.169

	12 mm Socket with Ratchet

- Tighten the cylinder head bolts in a crisscross pattern to the initial 1st torque values FIRST and then to the 2nd torque values as specified below.

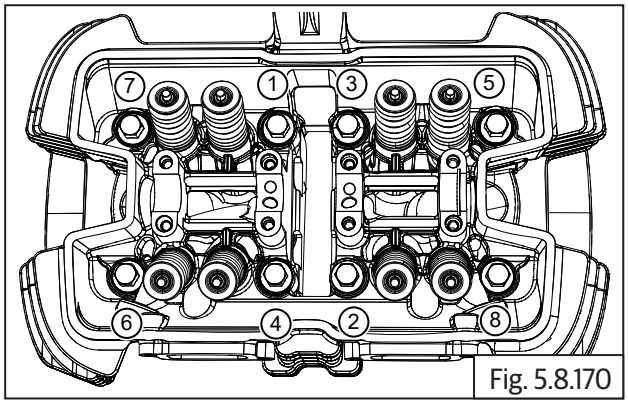

Fig. 5.8.170

- Finally tighten each of the cylinder head bolts using an angular torque wrench, to the specified angular torque value given below and in the same crisscross pattern detailed above.

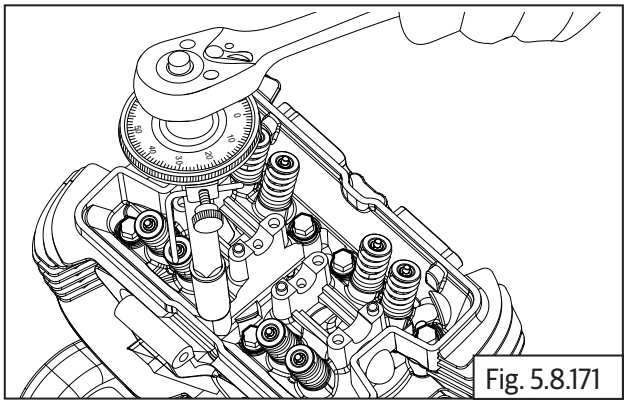
Fig. 5.8.171

	14 mm Socket with Angle wrench
1st Torque	15 N-m/1.5 kgf-m
2nd Torque	35 N-m/3.5 kgf-m
Angular Torque	270° (deg)

⚠ CAUTION

Torque and angle should be as specified. Do not provide over-torque as it will damage the bolts.

83.8.24. Starter Clutch to Magneto Rotor

- Lubricate starter clutch **(d)** and assemble into outer ring **(c)** with the collar seating in the groove in the outer ring.
- Position outer ring on magneto rotor such that the collar of the starter clutch is facing magneto rotor.
- Ensure mounting holes are aligned, insert 6 Nos. Hex socket head screws **(M6) (a)** into magneto rotor **(b)** and tighten outer ring **(c)** to rotor to specified torque.

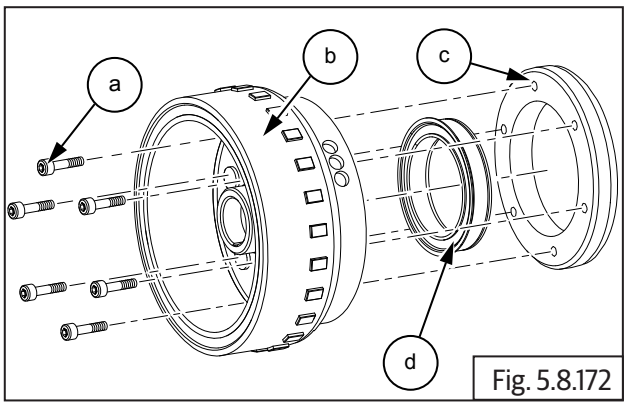

Fig. 5.8.172

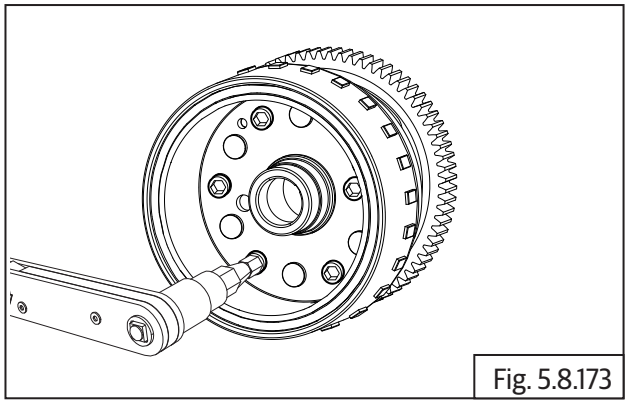

Fig. 5.8.173

	5 mm Allen socket with Torque wrench
Torque	10 N-m/1 kgf-m

83.8.25. Ideal Gear in Crankcase LH

- Position idle gear **(a)** against crankcase with smaller gear facing outside and insert idle gear spindle into boss in crankcase.

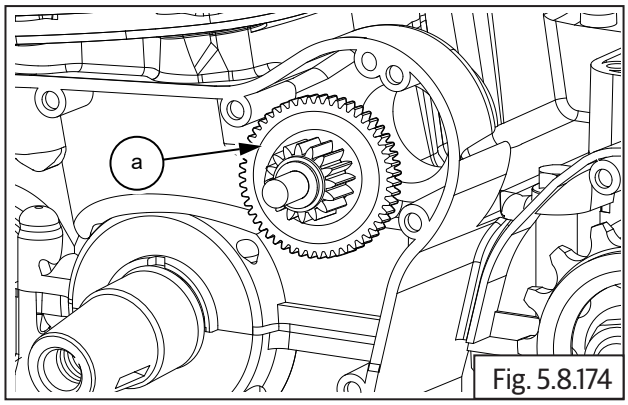

Fig. 5.8.174

83.8.26. Woodruf Key on Crankshaft

- Assemble woodruff key **(a)** on crankshaft and ensure it is facing upwards by rotating crankshaft.

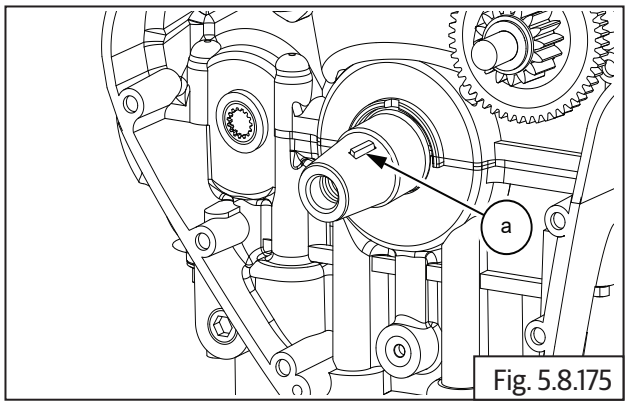

Fig. 5.8.175

83.8.27. Magneto Rotor on Crankcase

- Position gear starter clutch with the collar facing outside.
- Insert gear starter clutch **(a)** into magneto rotor **(b)** and rotate anti-clockwise to lock the gear starter clutch into magneto rotor.

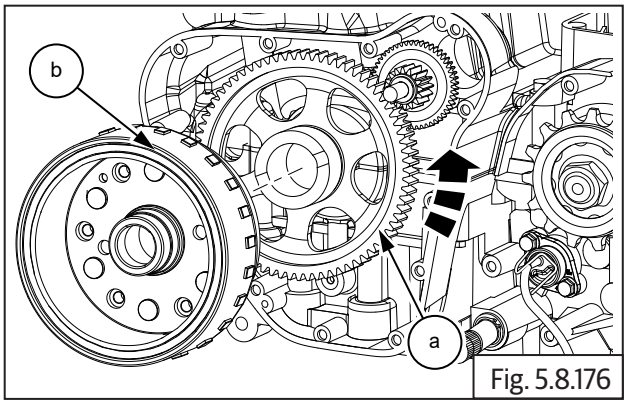

Fig. 5.8.176

- Locate magneto rotor **(a)** on crankshaft duly ensuring the slot in the rotor is positioned correctly on woodruff key.

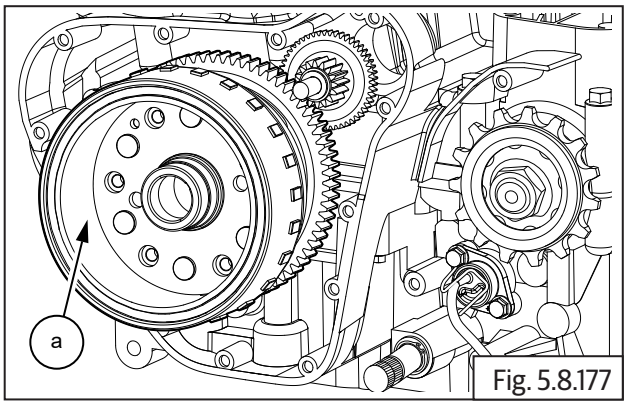

Fig. 5.8.177

- Locate and assemble Hex flange bolt **(M12) (a)** with washer on magneto rotor and tighten bolt just sufficiently.

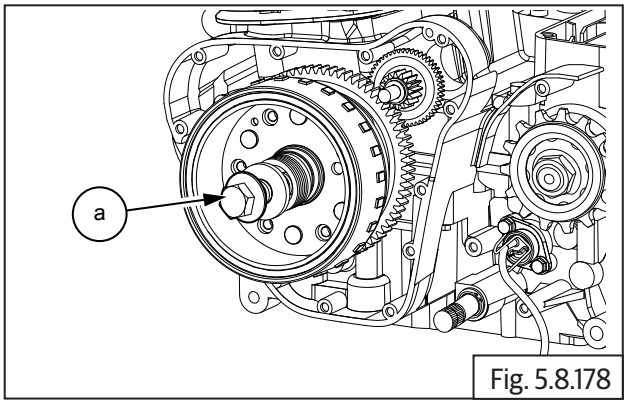

Fig. 5.8.178

- In order to tighten magneto rotor bolt, Insert special tool **(a)** in crankcase RH to lock the crankshaft and prevent rotation.
- Ensure LH piston is at TDC on compression stroke before locating special tool inside crankcase RH.

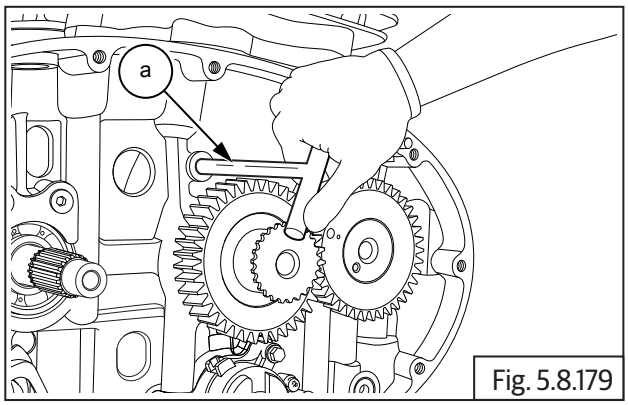

Fig. 5.8.179

SPL 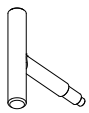	Part No: ST-27533-2
	Part Name: Magneto and Clutch locking tool

	17 mm Socket with Ratchet and Torque wrench
Torque	155 N-m/15.5 kgf-m

- Remove special tool from crankcase RH side after tightening magneto rotor bolt.

83.8.28. Camshaft Sub-Assembly

- Hold the timing chain in stretched condition and gently rotate crankshaft clockwise to bring LH piston to TDC.

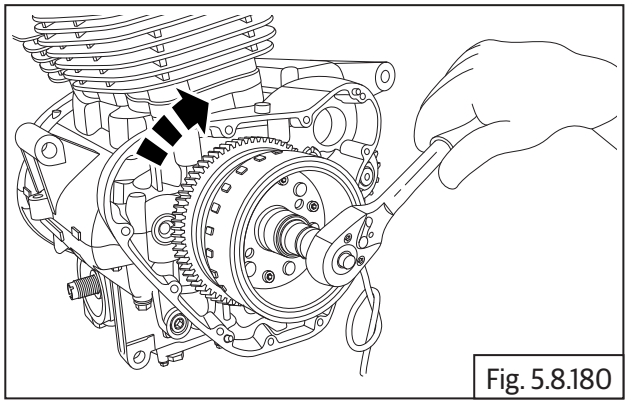
Fig. 5.8.180

	17 mm Socket with Ratchet

⚠ CAUTION

Do not rotate crankshaft anti-clockwise.

- Hold sprocket in position with one of the slotted holes facing on top.

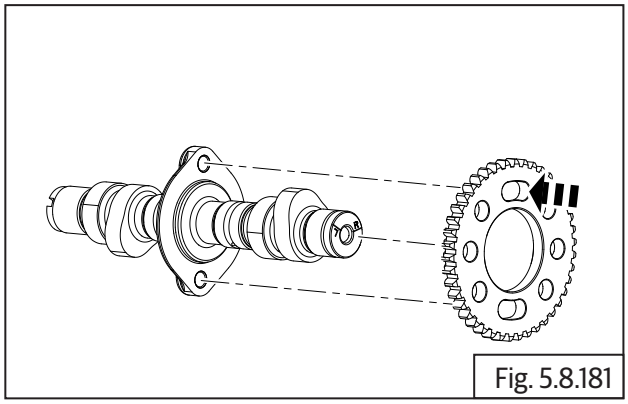
Fig. 5.8.181

- Assemble cam chain **(a)** on sprocket and locate camshaft **(b)** into sprocket from the RH side.

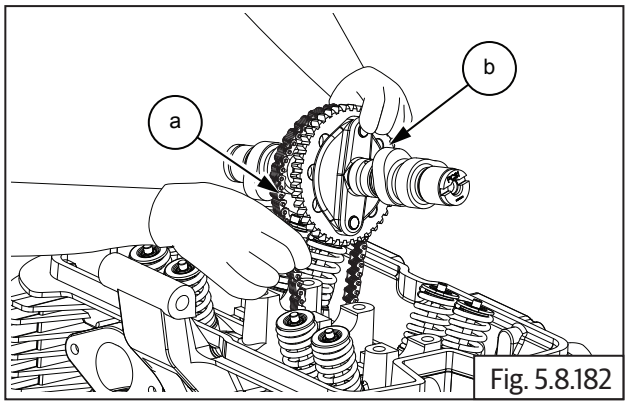

Fig. 5.8.182

- Ensure reference mark "L" in the camshaft is aligned to the cylinder head on LH side.

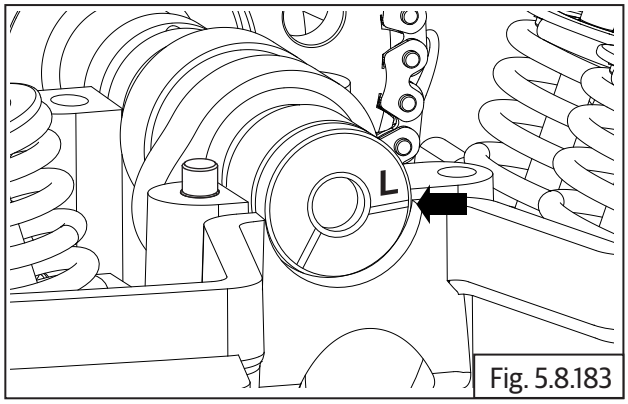

Fig. 5.8.183

- Ensure the **flat edge** of the special tool **(a)** is correctly located in the slot on the camshaft on RH side and the tool is resting correctly on the cylinder head.
- Gently rotate crankshaft to ensure proper seating of the tool in the camshaft slot and cylinder head.

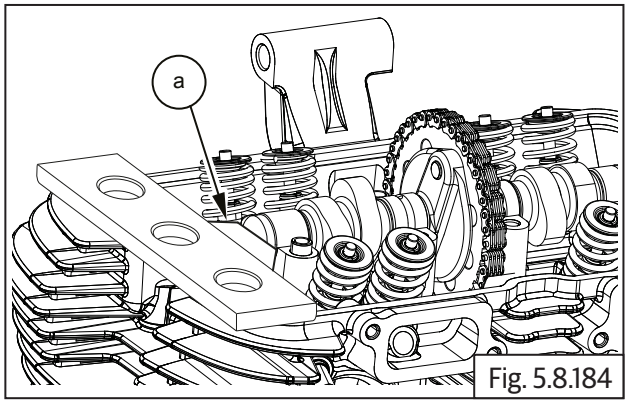

Fig. 5.8.184

SPL 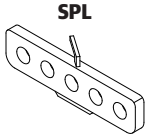	Part No: ST-27546-1
	Part Name: Cam - TDC Aligning Plate

- Locate timing chain sprocket on camshaft with its mounting slot centralised to the threads in the camshaft.
- Locate and tighten Hex head bolt **(M8) (a)** sufficiently on timing chain sprocket. **Do not TIGHTEN FULLY.**

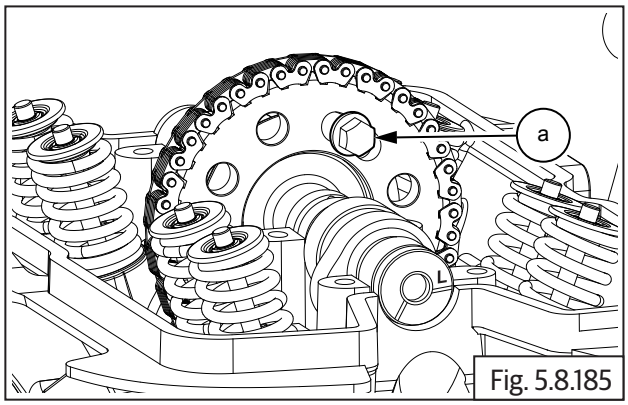

Fig. 5.8.185

	12 mm Socket with Torque wrench

- Remove the special tool from the camshaft on RH side.
- Rotate magneto **(a)** till another slotted hole on cam chain sprocket is at top most position. Ensure reference mark "R" aligned to the cylinder head.

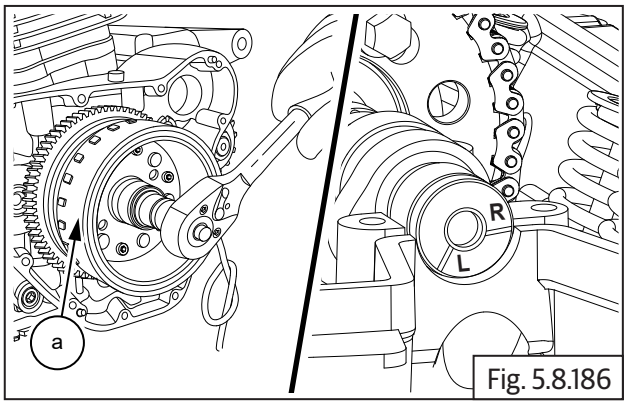

Fig. 5.8.186

	17 mm Socket with Ratchet

- Ensure the **angular edge** of the special tool **(a)** is correctly located in the slot on the camshaft on RH side and the tool is resting correctly on the cylinder head.
- Gently rotate camshaft, if necessery, to ensure proper seating of the tool in the camshaft slot and cylinder head.

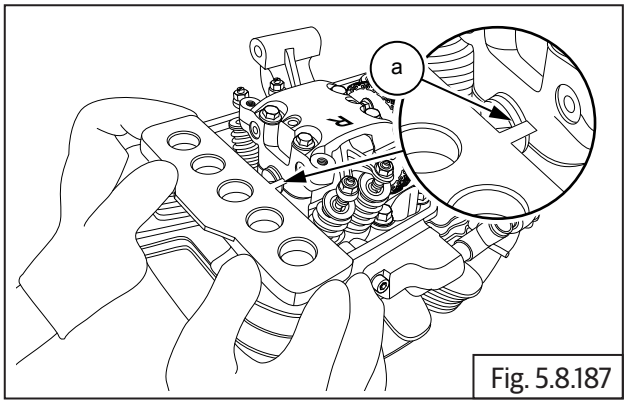

Fig. 5.8.187

SPL 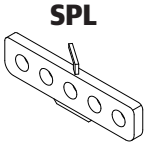	Part No: ST-27546-1
	Part Name: Cam - TDC Aligning Plate

- Tighten Hex head bolt **(M8) (a)** to specified torque.

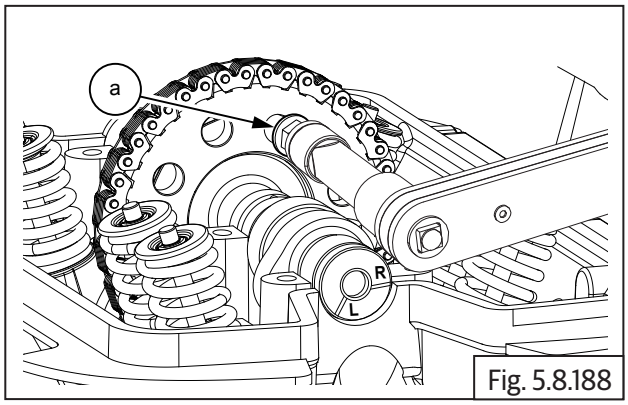

Fig. 5.8.188

	12 mm Socket with Torque wrench
Torque	35 N-m/3.5 kgf-m

- Remove the special tool from cylinder head on RH side.
- Rotate the magneto **(a)** clockwise till the first bolt is visible at top most position on cam side sprocket.

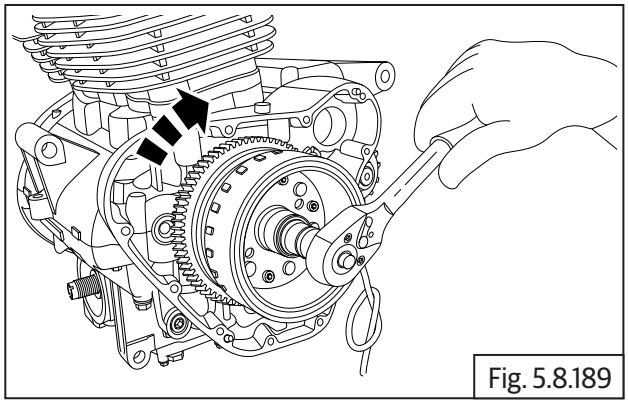
Fig. 5.8.189

- Ensure reference mark "L" in the camshaft is aligned to the cylinder head on LH side.

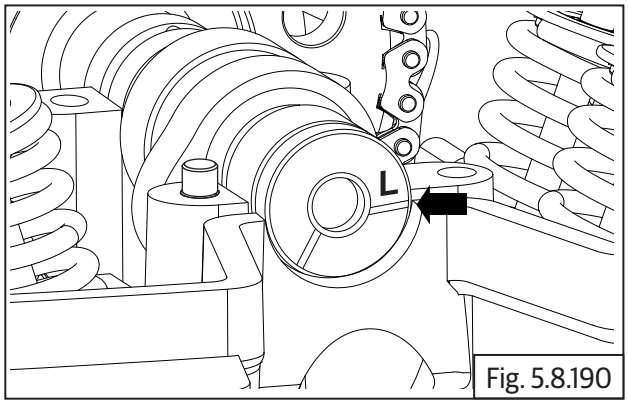

Fig. 5.8.190

- Tighten Hex head bolt **(M8) (a)** to specified torque.

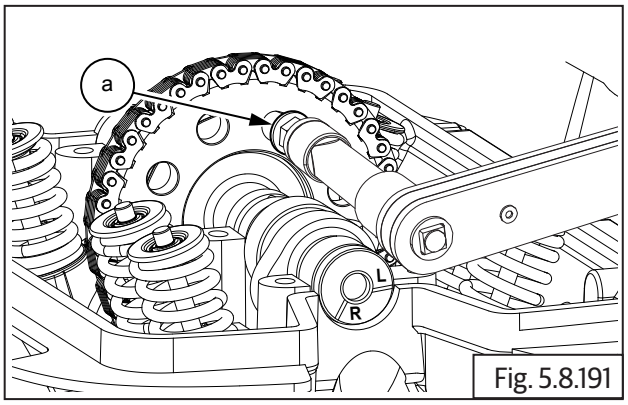

Fig. 5.8.191

	12 mm Socket with Torque wrench
Torque	35 N-m/3.5 kgf-m

- Locate and fit "C" washer **(a)** on camshaft.

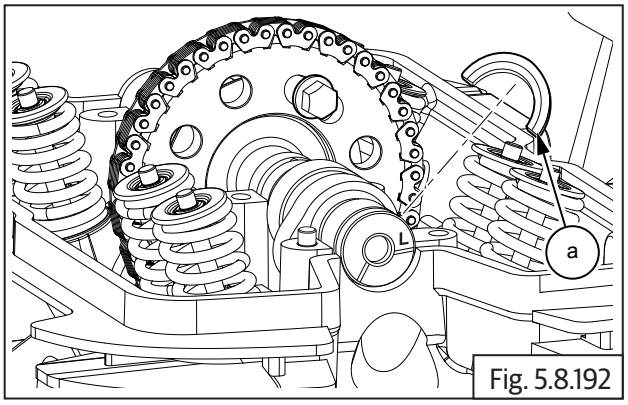

Fig. 5.8.192

83.8.29. Timing Chain Tensioner

- Ensure center bolt is removed from timing chain tensioner.
- Insert screw driver into timing chain tensioner adjuster **(a)** and loosen screw completely to release spring tension.

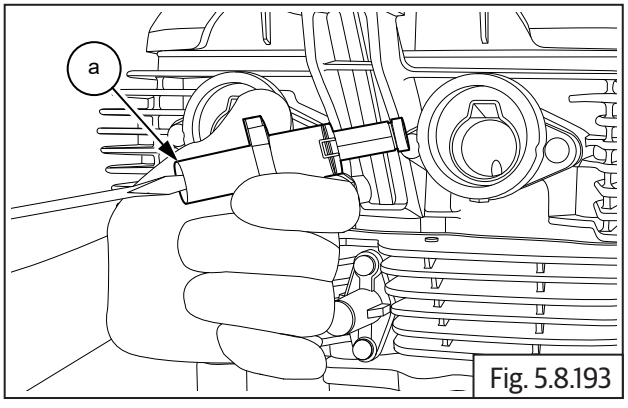

Fig. 5.8.193

	Screw driver

- Assemble new gasket on chain tensioner adjuster **(a)**. Ensure the foot is fully retracted into chain tensioner and locate chain tensioner adjuster in cylinder barrel such that the longer side of the foot is facing towards cylinder barrel RH.

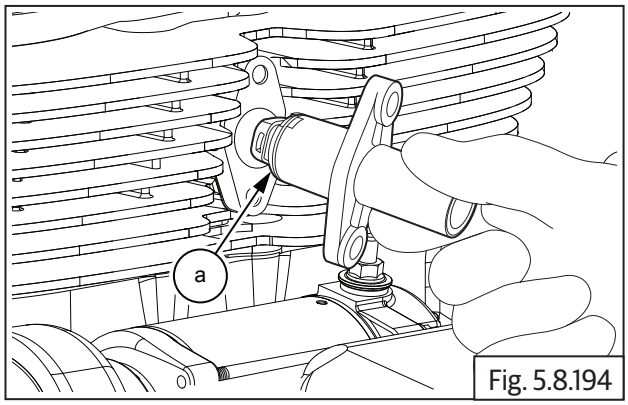

Fig. 5.8.194

- Assemble 2 Nos. Hex flange head bolt **(M6) (a)** on chain tensioner adjuster and tighten to specified torque.

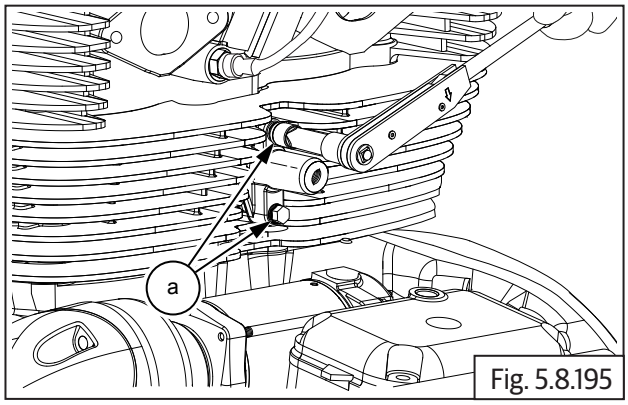

Fig. 5.8.195

	10 mm Socket with Torque wrench
Torque	12 N-m/1.2 kgf-m

- Locate screw driver into chain tensioner adjuster **(a)** and tighten tensioner screw till it comes to a stop. **DO NOT OVER TIGHTEN.**

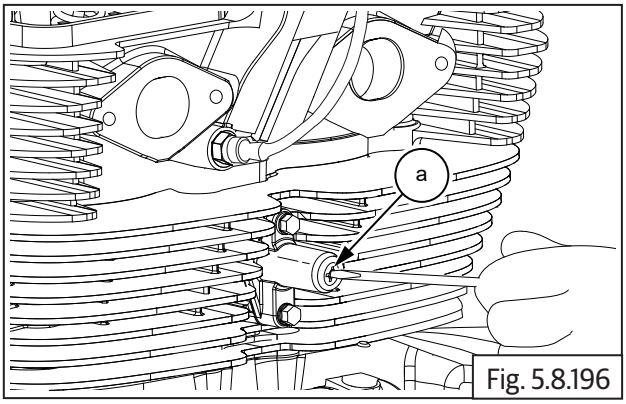

Fig. 5.8.196

	Screw driver

- Locate new O-ring **(b)** and, assemble Hex flange head bolt **(M6) (a)** on chain tensioner adjuster and tighten fully to specified torque.

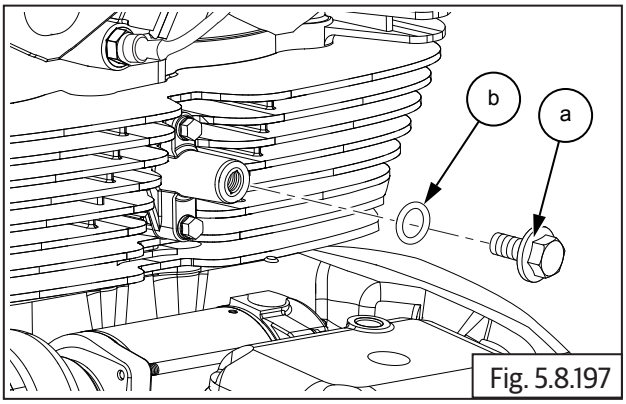

Fig. 5.8.197

	10 mm Socket with Ratchet and Torque wrench
Torque	4 N-m/0.4 kgf-m

83.8.30. Rocker Arms in Carriers LH and RH

Exhaust rocker arm in carrier "L"

- Place the carrier **(a)** on a work table with the mark "L" facing upwards.

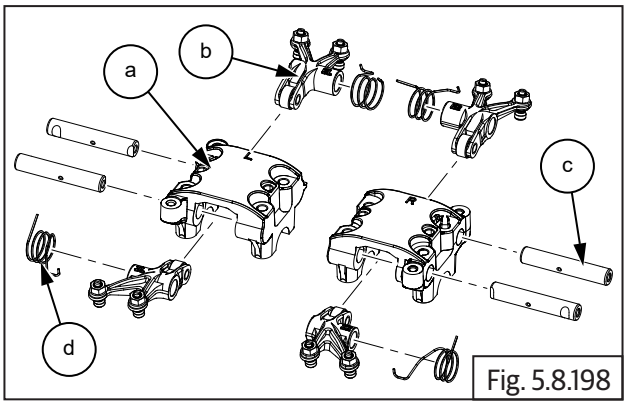

Fig. 5.8.198

- Gently depress the spring **(a)** and install into rocker carrierrs **(b)**.

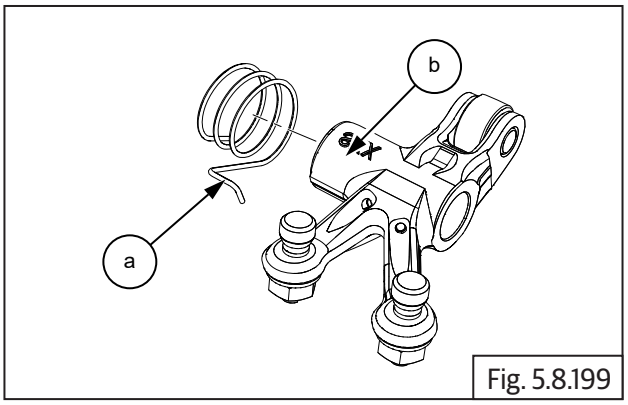

Fig. 5.8.199

- Locate rocker arm **(b)** with the marking "EL" into carrier "L" duly ensuring the following.
  - The roller of the rocker arm is inserted from the side marked "L".
  - The tappet adjustment screws are facing upwards.
  - Ensure the holes are aligned and insert spindle with its small chamfer side in the carrier.
  - Ensure cut away in spindle is correctly aligned to the carrier mounting hole.
  - Align and insert the spindle **(c)** into rocker carrier and rocker arm.

Intake rocker arm in carrier "L"

- Locate rocker arm with the marking "IL" into carrier "L" duly ensuring the following.
  - The roller of the rocker arm is inserted from the OPPOSITE side marked "L".
  - The tappet adjustment screws are facing upwards.
  - Ensure the holes are aligned and insert spindle with its small chamfer side in the carrier.
  - Ensure cut away in spindle is correctly aligned to the carrier mounting hole.
  - Align and insert the spindle **(c)** into rocker carrier and rocker arm.
- Repeat the above process to assemble rocker arm "ER" and "IR" into carrier "R".

83.8.31. Rocker Carrier on Cylinder Head LH

NOTE
• *Ensure "L" mark on camshaft is aligned to cylinder head.*

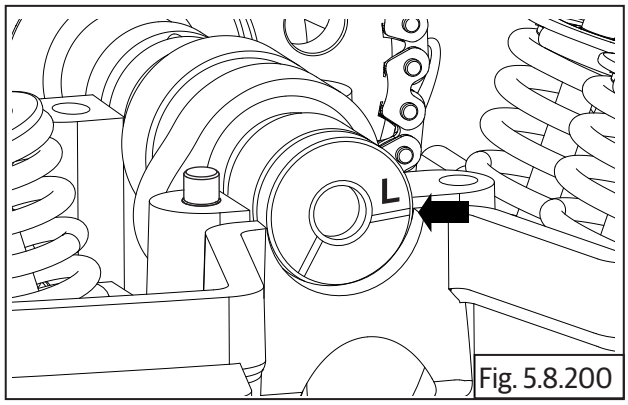

Fig. 5.8.200

- Insert special tool **(a)** in crankcase RH to lock the crankshaft and prevent rotation.

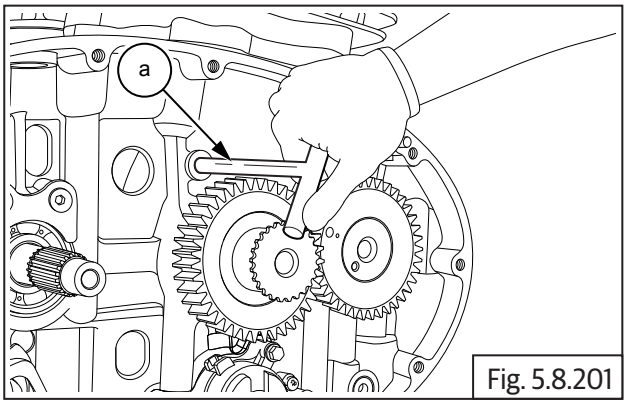

Fig. 5.8.201

SPL 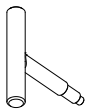	Part No: ST-27533-2
	Part Name: Magneto and Clutch locking tool

- Ensure the tappet adjuster locknuts and adjusters are fully loosened on the intake and exhaust rocker arms.
- Assemble rocker carrier LH **(a)** on cylinder head LH such that tappet adjusters are above the inlet and exhaust valves.
- Assemble 4 Nos. Hex flange head bolts **(M6) (b)** on rocker carrier and tighten in a crisscross pattern to torque specified torque.

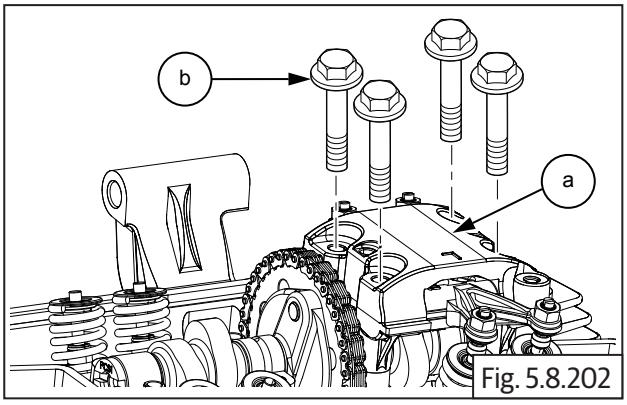

Fig. 5.8.202

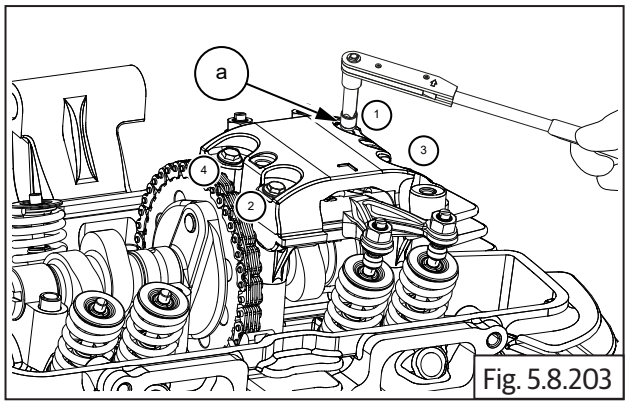

Fig. 5.8.203

	10 mm Socket with Torque wrench
Torque	12 N-m/1.2 kg-m

- Remove special tool from crankcase RH side.

83.8.32. Rocker Carrier on Cylinder Head RH

- Rotate magneto **(a)** clockwise and ensure reference mark "R" is aligned with cylinder head.

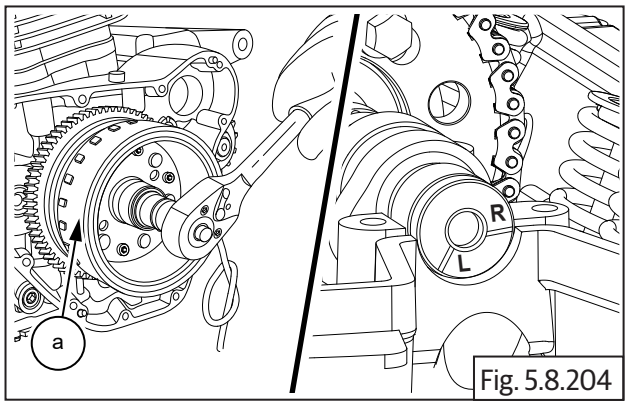

Fig. 5.8.204

	17 mm Socket with Ratchet

- Ensure the tappet adjuster locknuts and adjusters are fully loosened on the intake and exhaust rocker arms.
- Assemble rocker carrier RH **(a)** on cylinder head RH such that the tappet adjusters are above the inlet and exhaust valves.

- Assemble 4 Nos. Hex flange head bolts **(M6) (b)** on rocker carrier **(a)** and tighten in a crisscross pattern to specified torque.

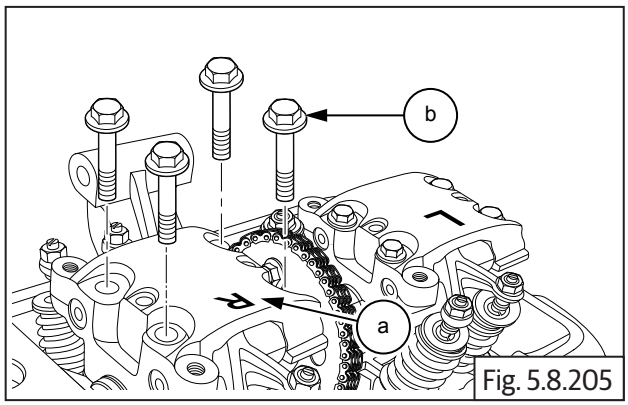

Fig. 5.8.205

- Tighten the bolts **(a)** to specified torque.

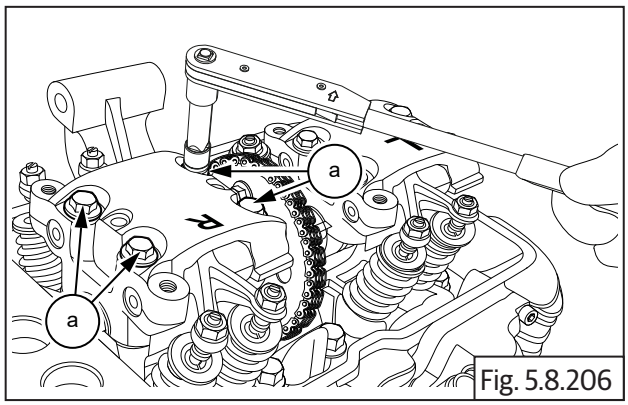

Fig. 5.8.206

	10 mm Socket with Torque wrench
Torque	12 N-m/1.2 kgf-m

- Ensure the special tools are removed from position after tightening bolts.

83.8.33. Tappet Clearance Adjustment

Tappet Clearance Cylinder head LH

- *Ensure "L" mark on camshaft* **(a)** *is aligned to cylinder head.*

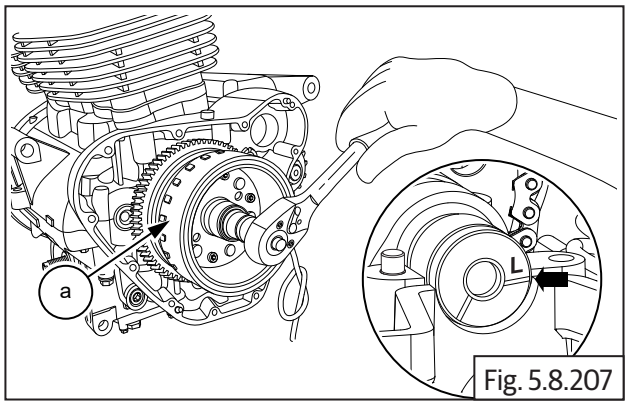

Fig. 5.8.207

- Ensure the **flat edge** of the special tool **(a)** is correctly located in the slot on the camshaft on RH side and the tool is resting correctly on the cylinder head.
- Gently rotate crankshaft to ensure proper seating of the tool in the camshaft slot and cylinder head.

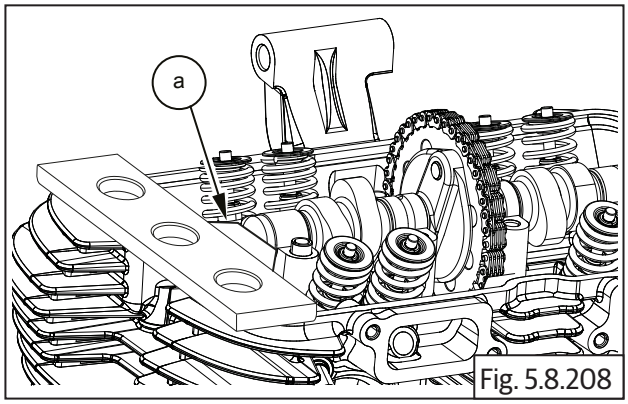

Fig. 5.8.208

SPL	Part No: ST-27546-1
	Part Name: Cam - TDC Aligning Plate

- Loosen tappet adjuster screw locknut **(a)** with special tool and ensure locknut is sufficiently loose.

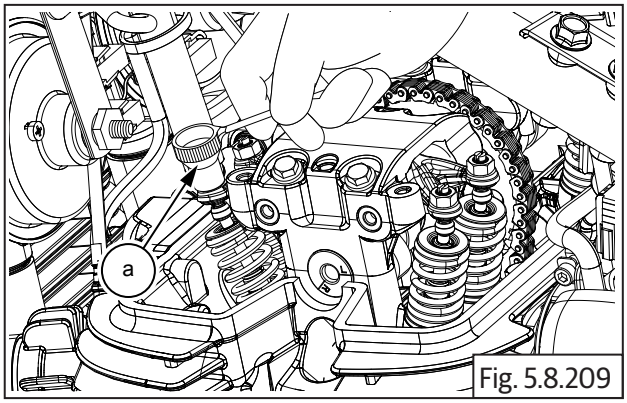

Fig. 5.8.209

SPL	Part No: ST-27527-2
	Part Name: Tappet adjusting tool

- Insert a screw driver into the tappet adjusting tool **(b)** and ensure it is seated correctly on the adjuster screw **(a)**.

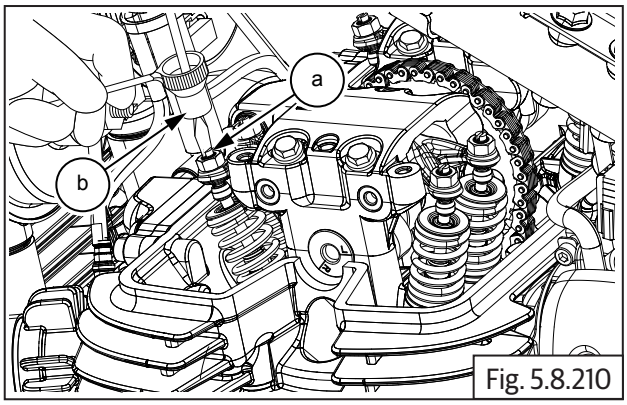

Fig. 5.8.210

- Locate feeler strip **(a)** between adjuster screw and valve stem as per thickness mentioned below.

For intake	0.08 mm
For exhaust	0.18 mm

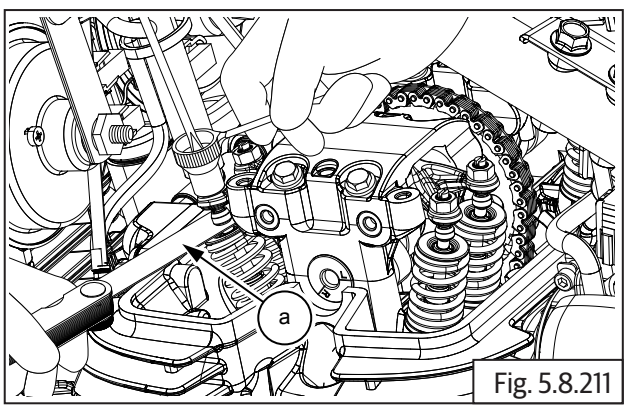

Fig. 5.8.211

- Gently pull out feeler strip **(a)** and check if it comes out freely OR with resistance.

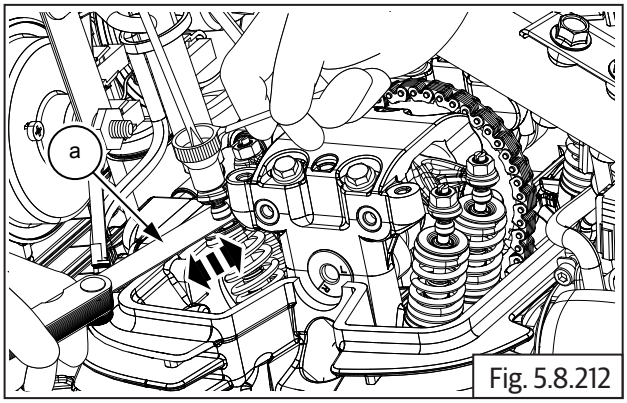

Fig. 5.8.212

- In case feeler strip comes out freely the adjuster screw has to be tightened.
- In case feeler strip movement is hard, the adjuster screw must be loosened.
- Tighten/loosen adjuster screw using screw driver, while simultaneously checking correct and smooth movement of feeler strip.
- Ensure special tool **(a)** does not rotate while adjusting the screw.

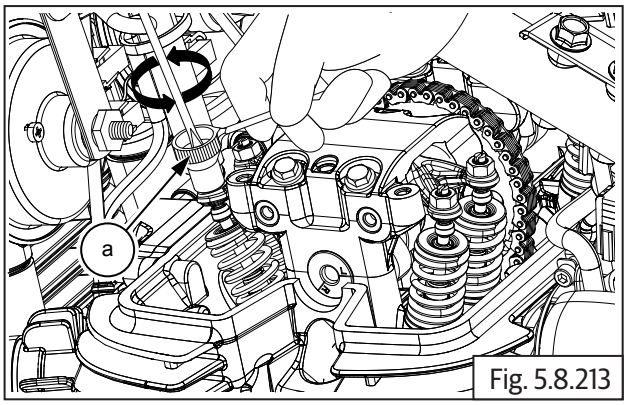

Fig. 5.8.213

- After setting correct gap, remove feeler strip, hold screw driver firmly such that the setting **DOES NOT** gets distrubed and gently lock the lock nut against rocker arm using special tool **(a)**.

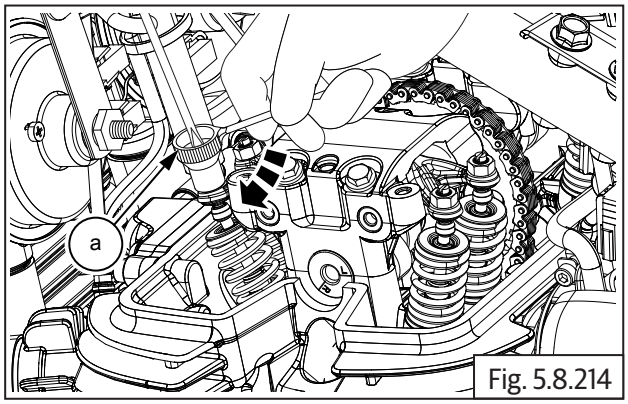

Fig. 5.8.214

NOTE
• *Reconfirm correctness of tappet clearances before final locking of lock nut .*

⚠ CAUTION
Do not adjust tappets with less OR no clearance as it will result in poor compression, valve burn-out and wear-out of tappet adjuster foot. **Do not adjust tappet with high clearance as will result in noise and insufficient opening of the valves.**

- Remove screw driver and both special tools after adjustment is complete.

Tappet Clearance Cylinder Head RH

NOTE
• *Ensure "R" mark on camshaft is aligned to cylinder head.*

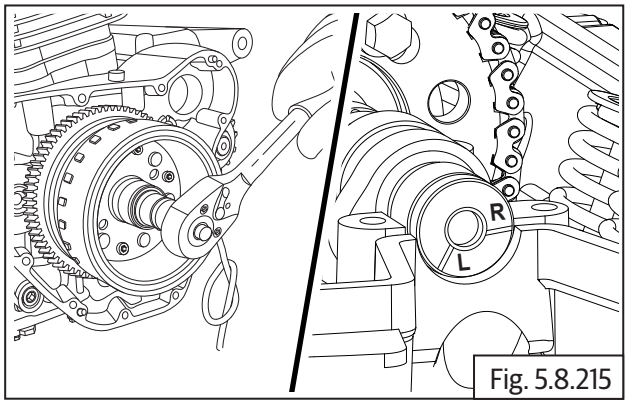

Fig. 5.8.215

- Ensure the **angular edge** of the special tool **(a)** is correctly located in the slot on the camshaft on RH side and the tool is resting correctly on the cylinder head.

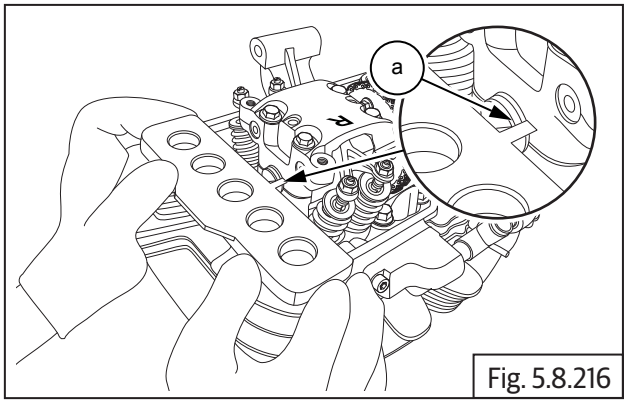

Fig. 5.8.216

SPL	Part No: ST-27546-1
	Part Name: Cam - TDC Aligning Plate

- Adjust the RH tappets clearances as mentioned in tappets adjustment LH.

83.8.34. Cover Cylinder Head

NOTE
• *Ensure the cover-cylinder head seating surface and gasket seating groove are clean.*

- Locate new rubber gasket in the groove in cylinder head and ensure it is properly and evenly seated .

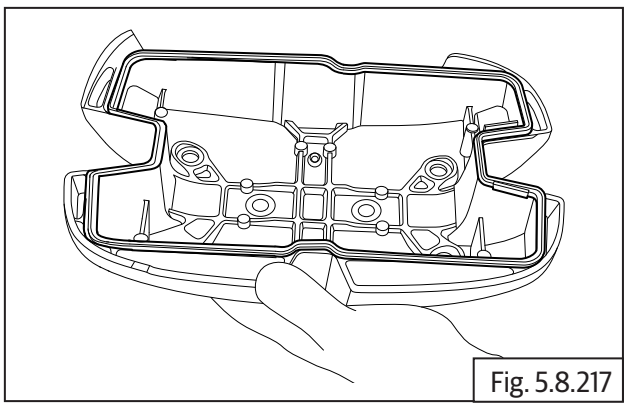
Fig. 5.8.217

- Locate cylinder head cover **(a)** on cylinder head with its narrow deep slot facing towards front of the engine.

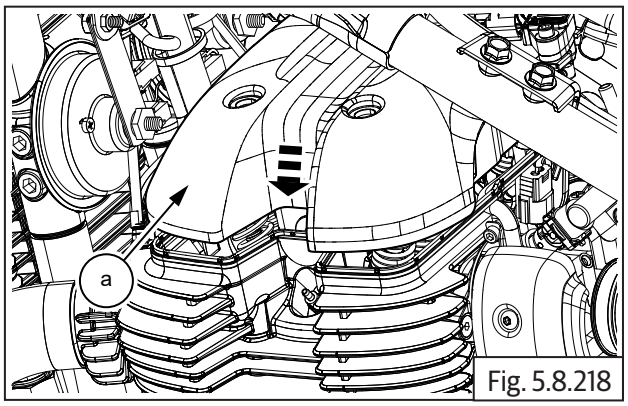

Fig. 5.8.218

- Assemble new seals washers **(a)** on the 4 Nos. Hex flange head bolts **(M5) (b)**.
- Locate the bolts on cylinder head cover **(c)** and tighten bolts to cylinder head evenly to specified torque.

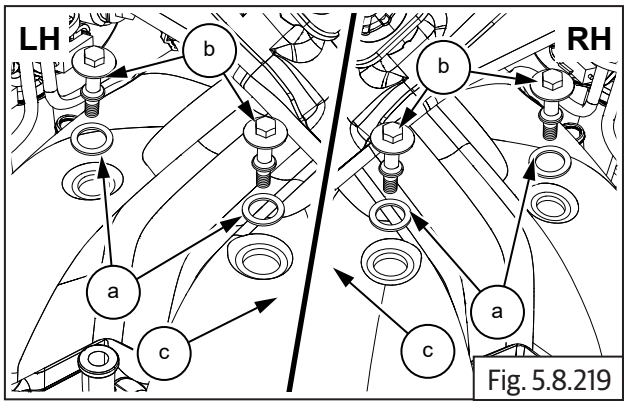

Fig. 5.8.219

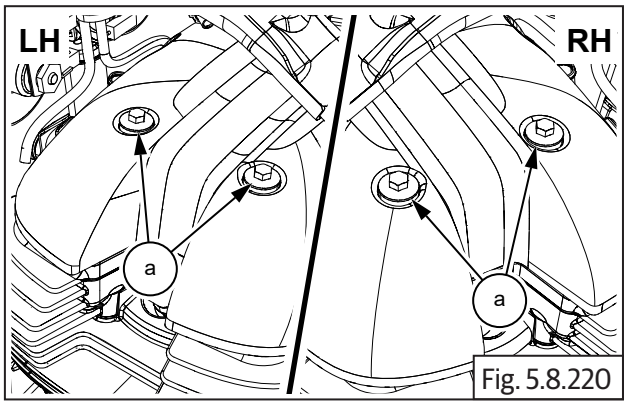

Fig. 5.8.220

	8 mm Socket with Torque wrench
Torque	12 N-m/1.2 kgf-m

83.8.35. Reed Valves

NOTE

- *The reed valve has a rounded edge in one of the corners this should be aligned to the rounded edge in the housing during assembly.*

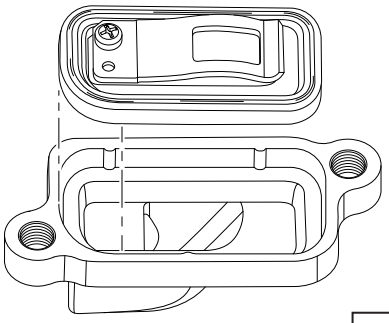
Fig. 5.8.221

- Loacte reed valves LH & RH **(a)** in the housings duly ensuring it is seated properly and correctly.
- Assemble new "O" rings **(b)** on either ends of the connection tube and locate the reed valves housings LH & RH on the connection tube duly ensuring the connection tube is fully inserted into the housings.

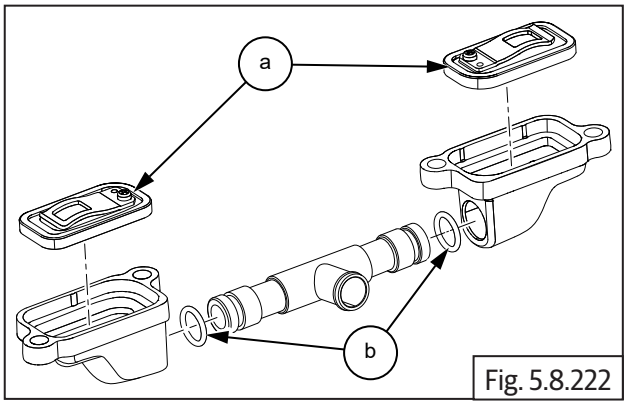

Fig. 5.8.222

- Locate reed valves on cylinder head front side with the hose **(a)** pointing upwards and ensure the mounting holes are aligned.

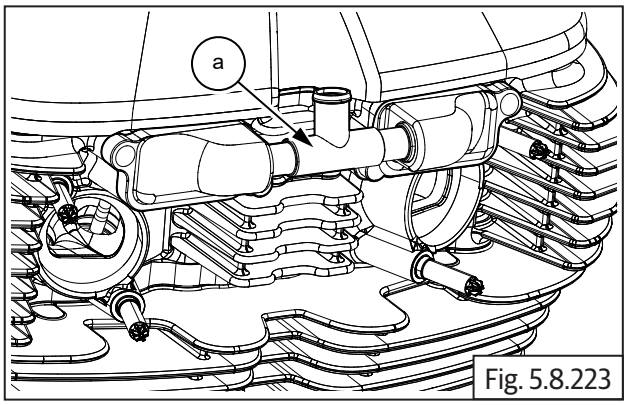

Fig. 5.8.223

- Locate 2 Nos. each Hex socket head bolts **(M6) (a)** on the LH and RH reed valves and tighten evenly to specified torque.

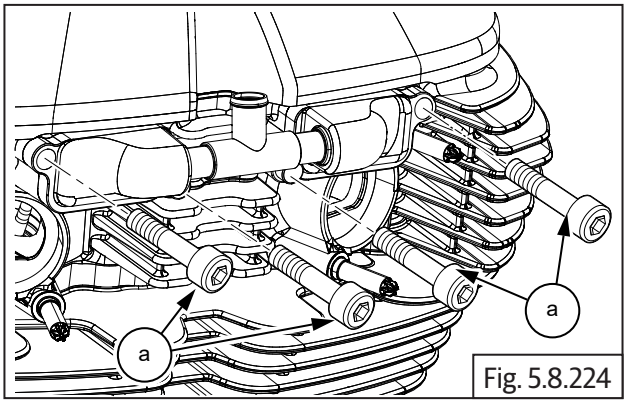

Fig. 5.8.224

	5 mm Allen socket and Torque wrench
Torque	10 N-m/1 kgf-m

83.8.36. Inlet Manifold Rubber Flanges LH & RH

- Locate 2 Nos. inlet manifold rubber flanges **(a)** on the cylinder heads, duly ensuring the "cut away" in the manifolds are matching with the "cut away" in the cylinder head.

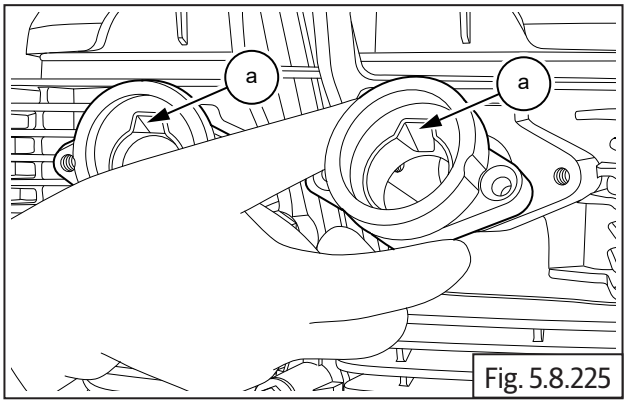

Fig. 5.8.225

- Locate and tighten 2 Nos. each countersunk head bolts **(M5) (a)** on the manifold rubber flanges on inlet manifold LH & RH.

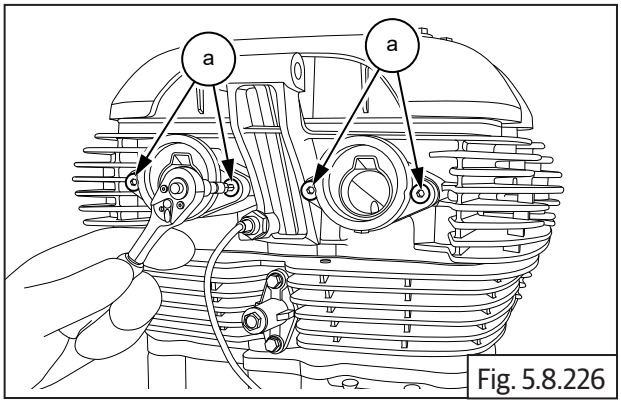

Fig. 5.8.226

	4 mm Allen socket with Ratchet and Torque wrench
Torque	2 N-m/0.2 kgf-m

83.8.37. Star Index

- Locate and tighten 2 Nos. Hex head bolts **(M6) (a)** on selector fork shaft stopper plate.

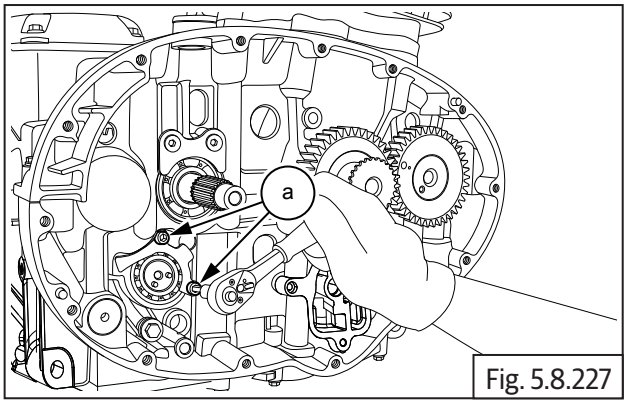

Fig. 5.8.227

	5 mm Allen socket with Torque wrench
Torque	12 N-m/1.2 kgf-m

- Locate and tighten Hex socket head stepped bolt **(M6) (a)** on gear shift cam drum.

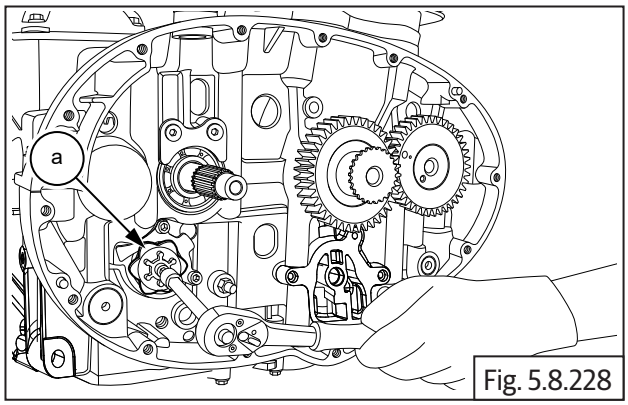

Fig. 5.8.228

	5 mm Allen socket with Ratchet

83.8.38. Star Index Stopper

- Locate spring and stopper plate support **(a)** on RH lower crankcase and assemble Hex head flange bolt **(M6) (b)**.

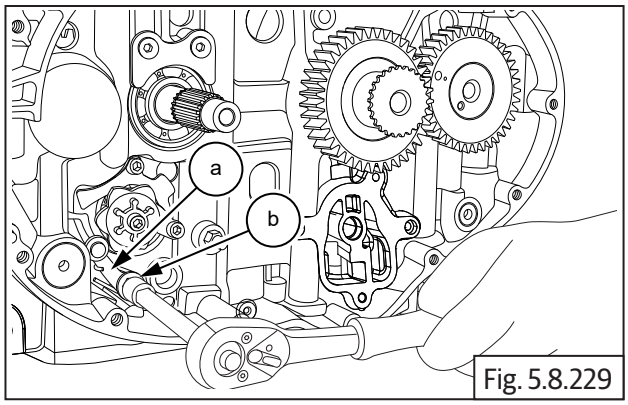

Fig. 5.8.229

	10 mm Socket with Torque wrench
Torque	12 N-m/1.2 kgf-m

NOTE
• *Handle stopper plate tension spring carefully else it may damage supporting components.*

Shifter Selector Shaft Assembly

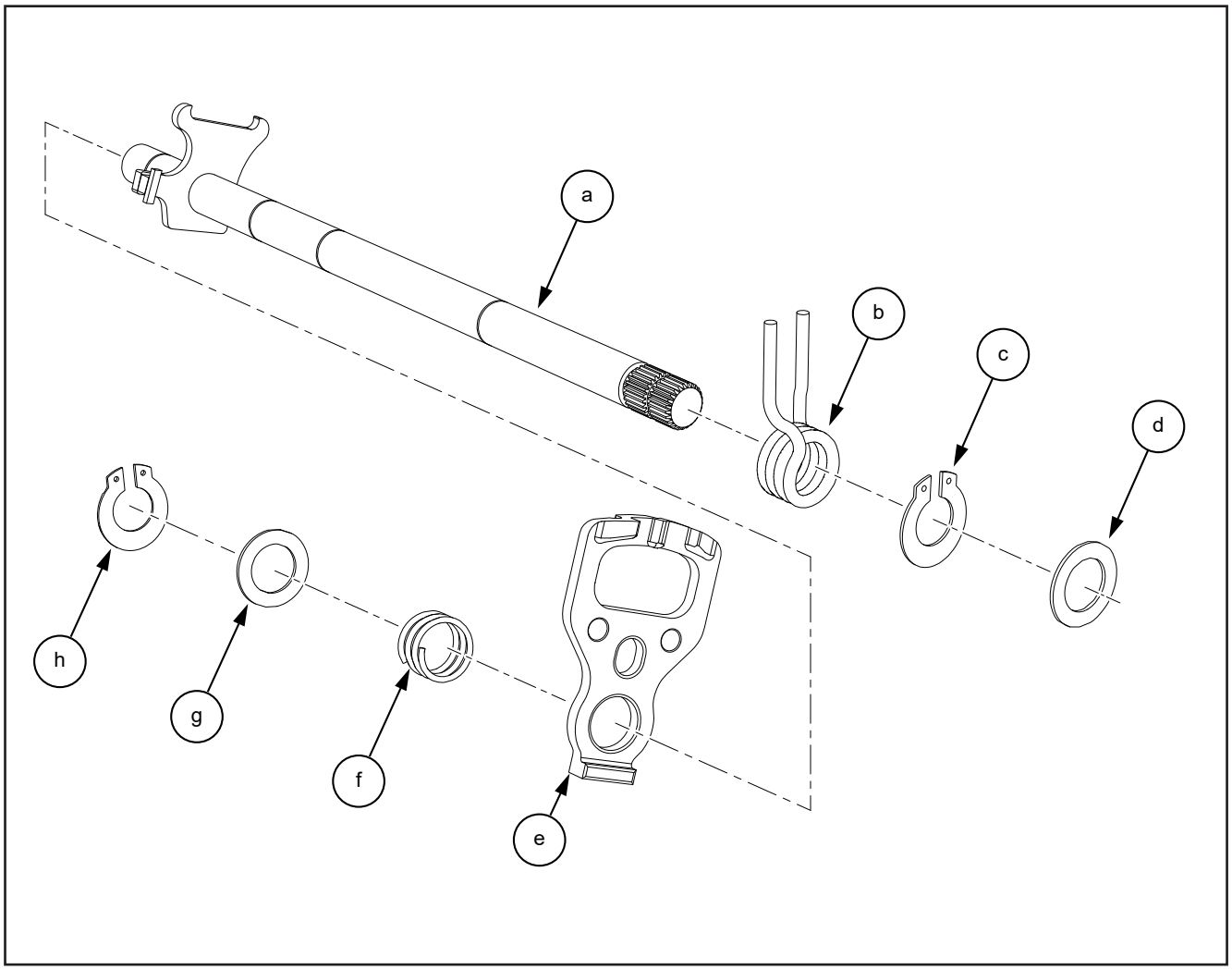

Item No.	Description	Quantity
a	Shifter shaft	1
b	Spring	1
c	Circlip	1
d	Washer	1
e	Outer plate	1
f	Spring	1
g	Washer	1
h	Circlip	1

83.8.39. Shifter Selector Shaft

- Assemble inner spring **(a)** from the longer side of shifter shaft **(b)**.
- Ensure the legs of the spring are correctly located in the plate on the shifter shaft.

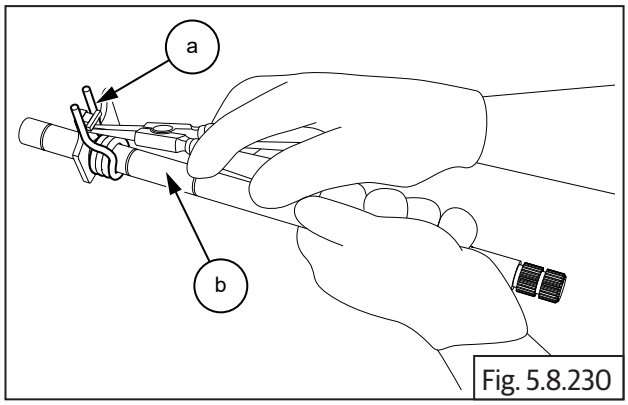

Fig. 5.8.230

	Circlip plier

- Assemble inner circlip **(a)** on longer end of shifter shaft **(b)**. Ensure it is properly seated on shifter shaft groove near the spring.

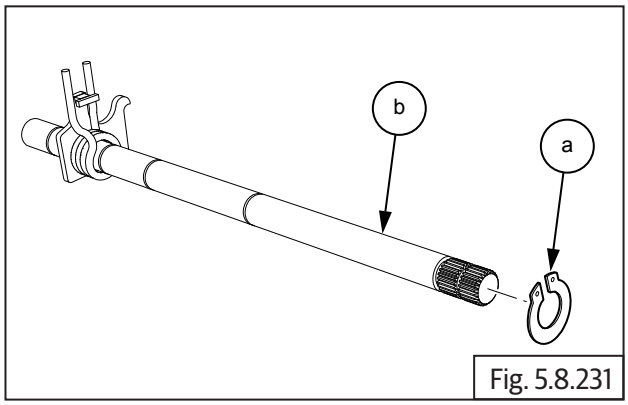

Fig. 5.8.231

	Circlip plier

- Assemble 1st inner washer **(a)** from the longer end of shifter shaft **(b)**.

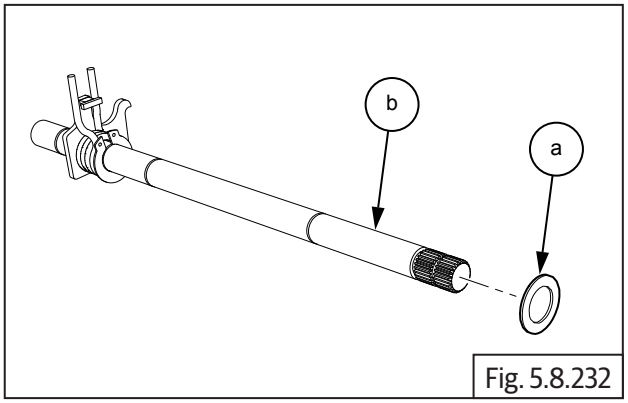

Fig. 5.8.232

- Assemble outer plate **(a)** from smaller end of shifter shaft with its projection facing towards the longer end of the shaft.
- Ensure the peg on the shifter shaft is located correctly in the hole on the outer plate **(a)**.

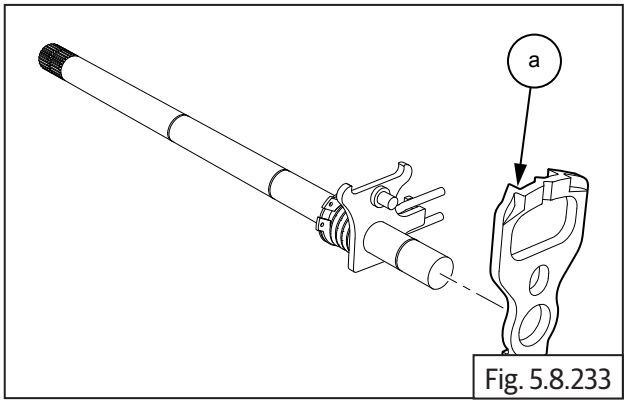

Fig. 5.8.233

- Assemble outer spring **(a)** from smaller end of shifter shaft.

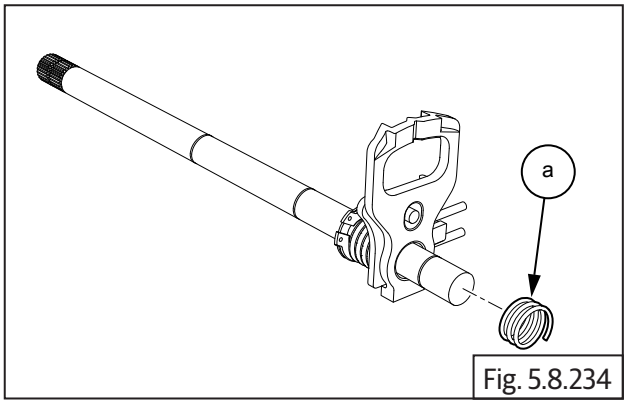

Fig. 5.8.234

- Assemble outer washer **(a)** from the smaller end of shifter shaft.

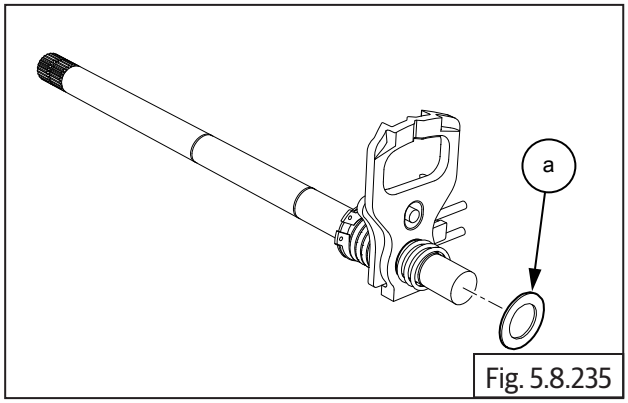

Fig. 5.8.235

- Assemble outer circlip **(a)** from smaller end of shifter shaft.

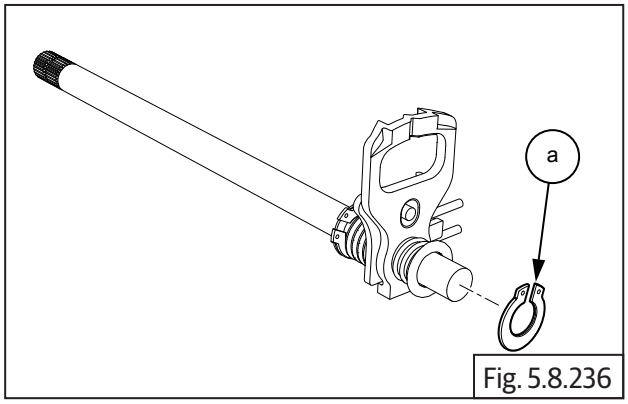

Fig. 5.8.236

	Circlip plier

- Insert longer end of the shifter shaft **(a)** into the hole in the lower crankcase from the RH side.
- Ensure the shifter plate is correctly seated over the star index.

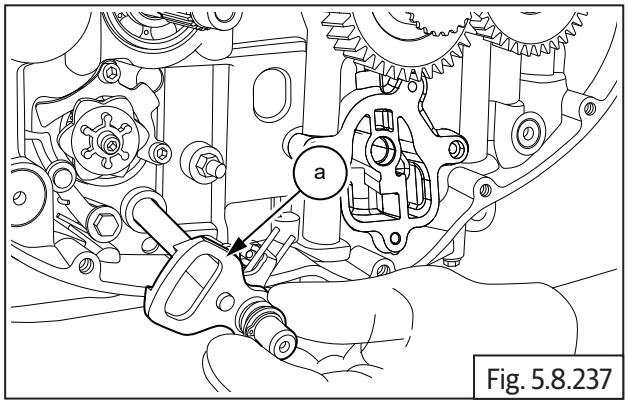

Fig. 5.8.237

- Assemble washer **(a)** on the shifter shaft on the LH side.

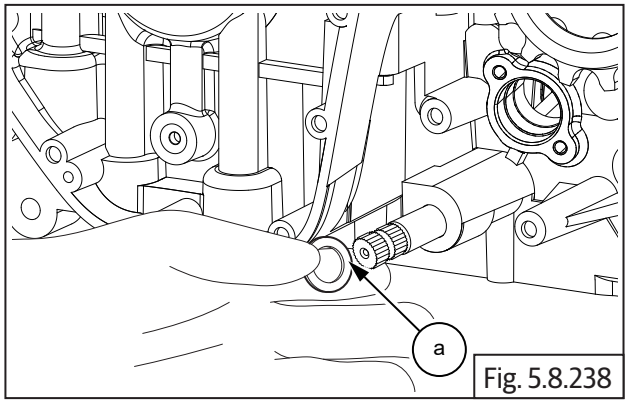

Fig. 5.8.238

- Assemble circlip **(a)** on the shifter shaft at the LH side and ensure it is correctly seated and locked in the groove on the shifter shaft.

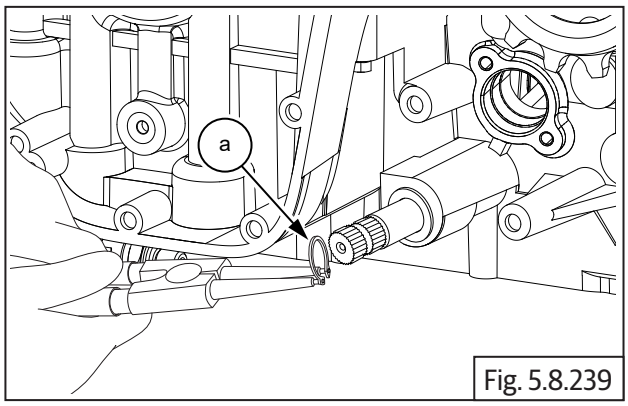

Fig. 5.8.239

	Circlip plier

83.8.40. Oil Pump

- Locate oil pump mounting point below crankshaft gear in RH crankcase.
- Assemble 4 Nos. Hex flange head bolts **(M6) (a)** on oil pump **(b)** and tighten bolts to specified torque.

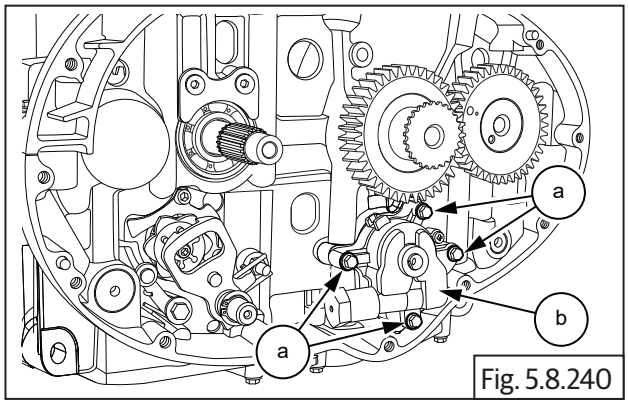

Fig. 5.8.240

	10 mm Socket with Ratchet
Torque	12 N-m/1.2 kgf-m

- Locate and fit oil pump drive chain **(a)** on crankshaft gear **(b)** and sprocket on oil pump.

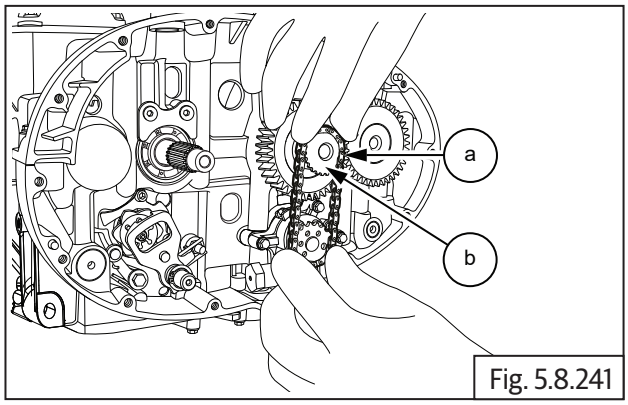

Fig. 5.8.241

- Locate Hex flange head bolt **(M6) (a)** on oil pump and tighten to specified torque.

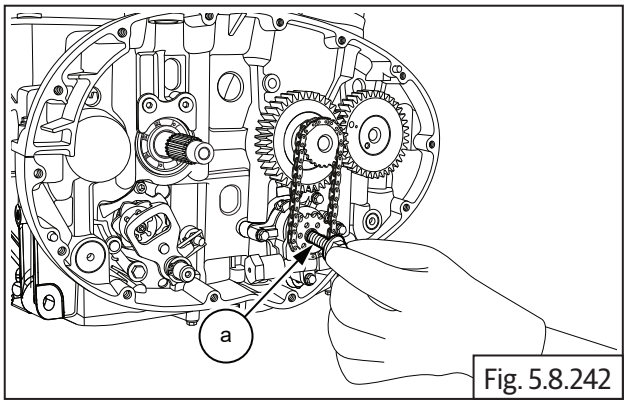

Fig. 5.8.242

NOTE
• *Lock the crank shaft by using special tool to prevent rotation while tightening bolt.*

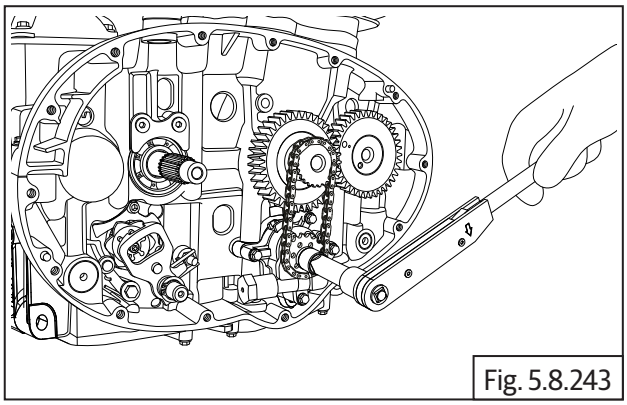
Fig. 5.8.243

	10 mm Socket with Torque wrench
Torque	12 N-m/1.2 kgf-m

Clutch Plate Assembly

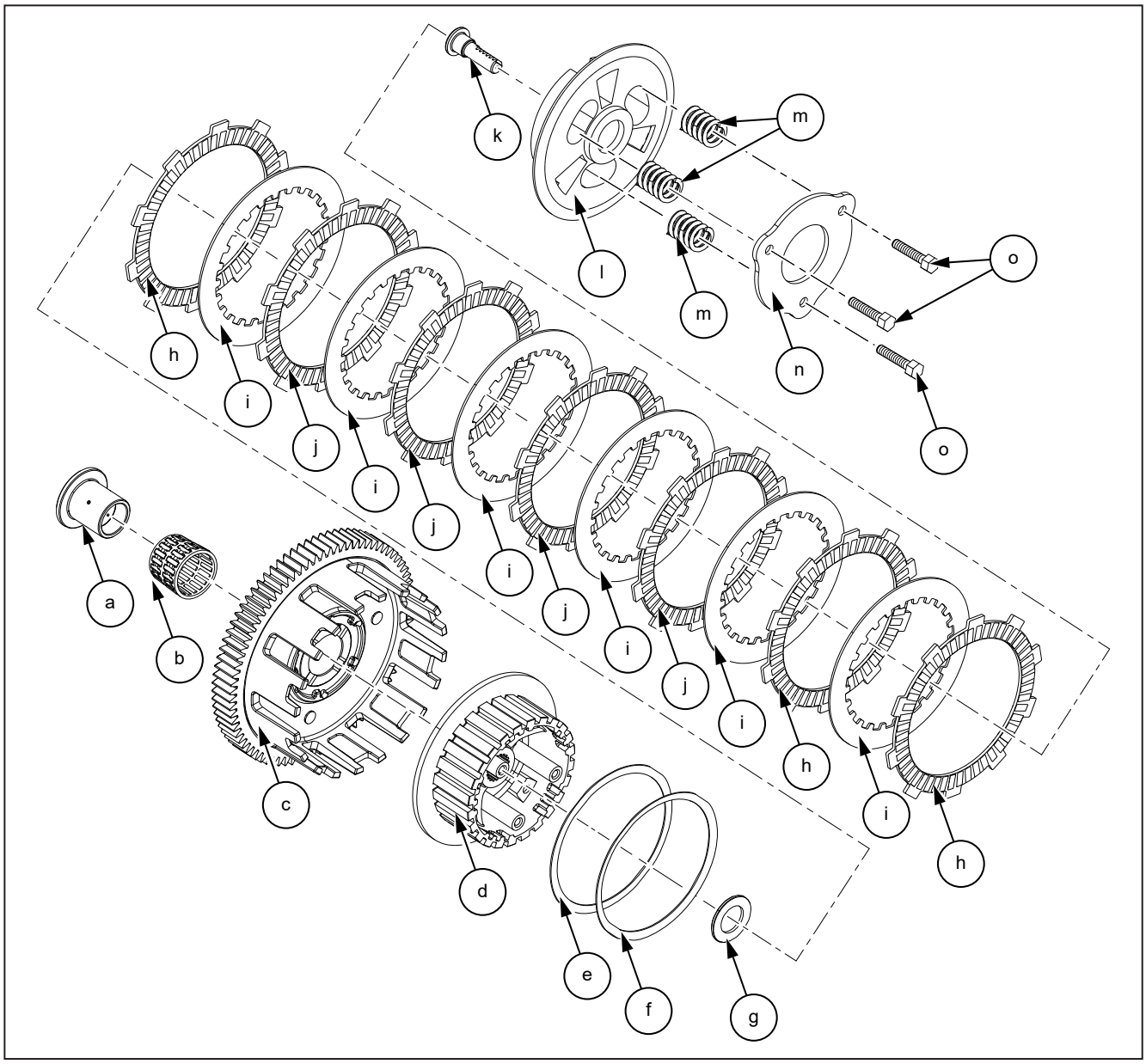

Item No.	Description	Quantity	Item No.	Description	Quantity
a	Collar bush	1	i	Clutch steel plates	6
b	Needle bearing	1	j	Clutch friction plates with smaller ID	4
c	Clutch Housing	1	k	Pull rod	1
d	Clutch bell	1	l	Clutch hub	1
e	Anti-Judder washer Plain	1	m	Springs	3
f	Belleville washer	1	n	Pressure plate	1
g	Thrust washer	1	o	Hex flange head bolts M6	3
h	Clutch friction plate with Bigger ID	3			

83.8.41. Clutch Assembly

- Ensure collar on bush **(a)** is facing inward and assemble it on countershaft **(b)**. Ensure it is seated properly.

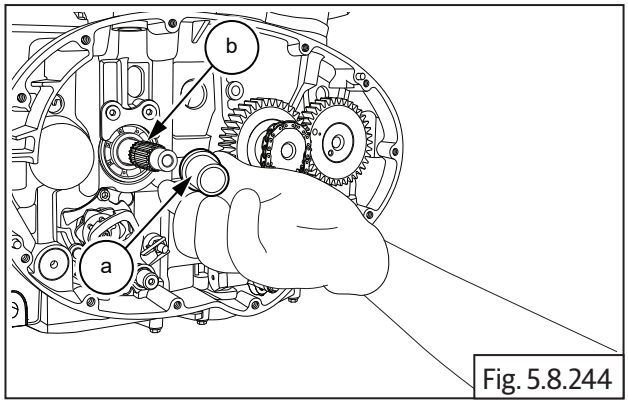

Fig. 5.8.244

- Assemble needle bearing **(a)** on countershaft **(b)**.

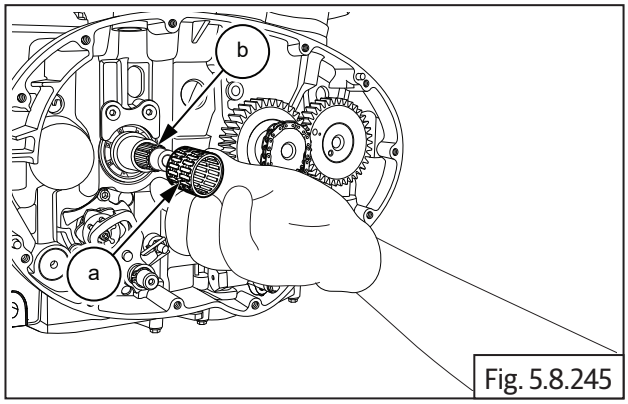

Fig. 5.8.245

- Locate clutch housing **(a)** on counter shaft, with its lugs **(b)** facing outside.
- Ensure the clutch housing gear is correctly meshed with the gear on crankshaft.

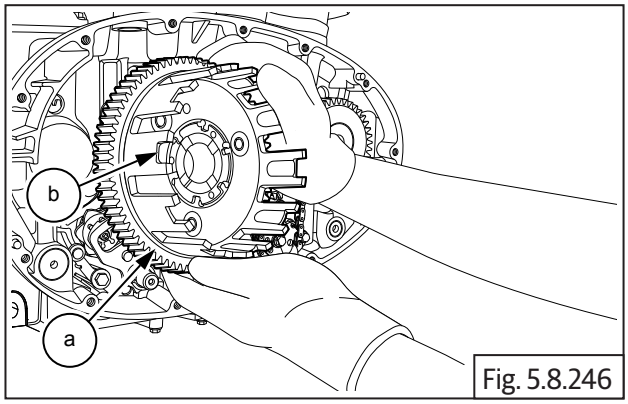

Fig. 5.8.246

- Assemble thrust washer **(a)** on countershaft.

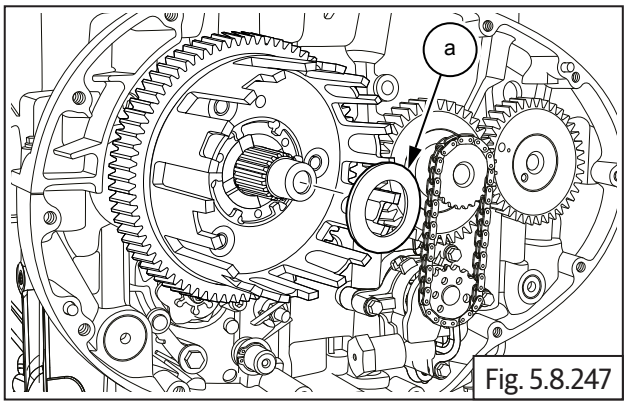

Fig. 5.8.247

- Locate bell assembly **(a)** on the splines on counter shaft **(b)**.

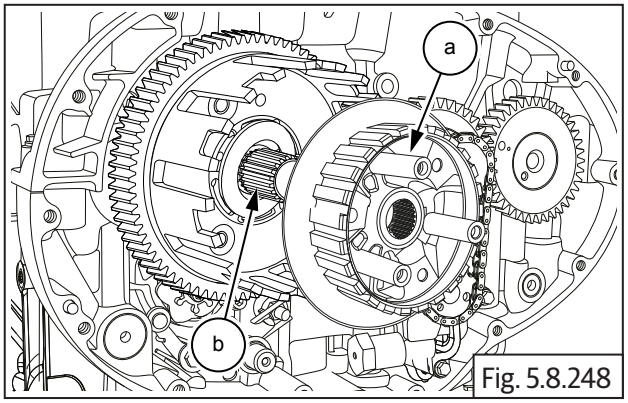

Fig. 5.8.248

- Locate the anti-judder steel washer-plain, in the groove in the clutch bell.
- Assemble Belleville washer over judder washer in the clutch bell.
- **Ensure the "hump" of the belleville washer is facing inside and seated against the judder washer.**
- Assemble 1st friction plate with larger ID (less friction area) ensuring the splines of the plate are correctly positioned and located on the clutch housing.
- Assemble 1st steel plate ensuring the splines on the plate are correctly positioned and located on the clutch bell.
- Assemble 2nd friction plate on the clutch housing and ensure it is seated against the 1st steel plate.

- Assemble 2nd steel plate on clutch bell.
- Assemble 3rd friction plate on clutch housing.

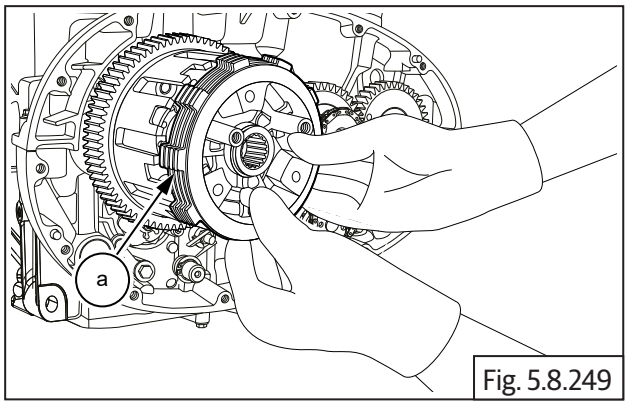

Fig. 5.8.249

- Assemble washer **(a)** on countershaft.

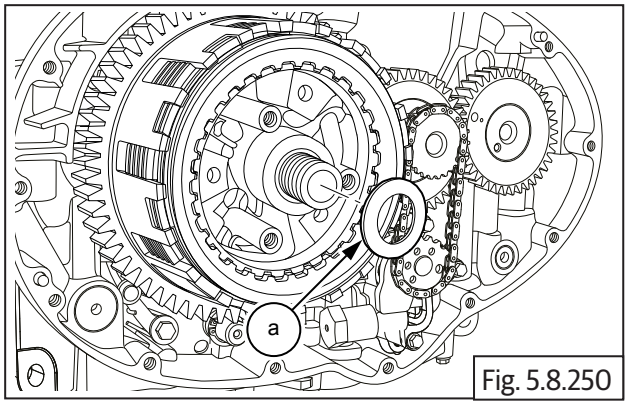

Fig. 5.8.250

- Locate the Hex "U" nut **(M17) (a)**.

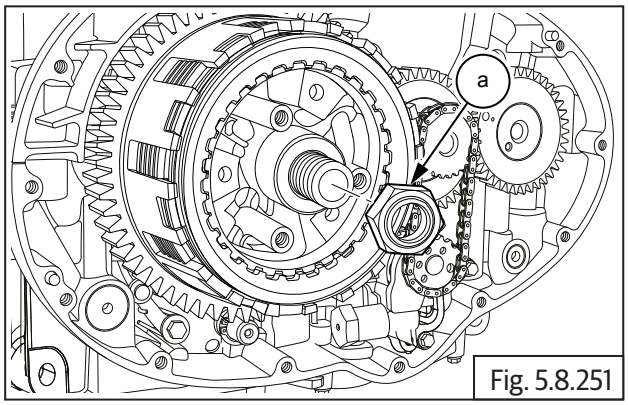

Fig. 5.8.251

⚠ CAUTION

Hex U nut is left hand thread. Turn anticlockwise to tighten nut on shaft.

- Locate and hold special tool on clutch assembly and tighten clutch hub nut to specified torque.

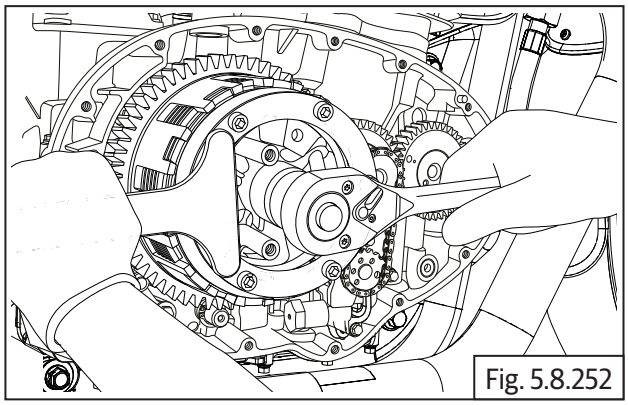
Fig. 5.8.252

SPL 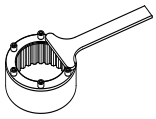	Part No: ST-27558-1
	Part Name: Clutch plate holder with Torque wrench
Torque	120 N-m/12 kgf-m

- Remove special tool and further assemble the following
  - 3rd Steel plate on clutch bell .
  - 4th Friction plate on clutch housing.
  - 4th Steel plate on clutch bell.
  - 5th Friction plate on clutch housing.
  - 5th Steel plate on clutch bell.
- Locate 6th friction plate **(a)** with larger ID (less friction area) on clutch hub **(b)** and ensure it is seated properly against the inner face of the clutch hub.

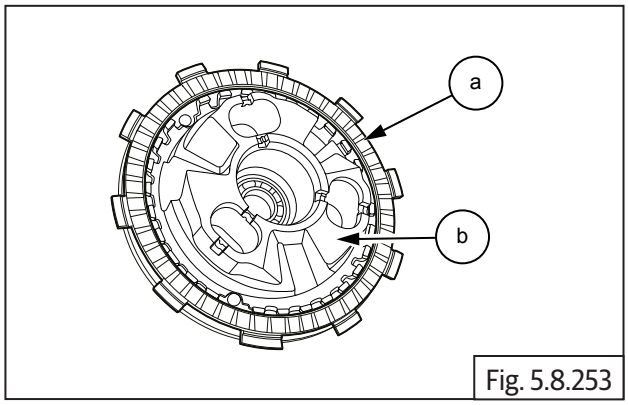

Fig. 5.8.253

- Locate 6th steel plate **(a)** on the splines in clutch hub **(b)** and ensure it is properly seated against the 6th friction plate.

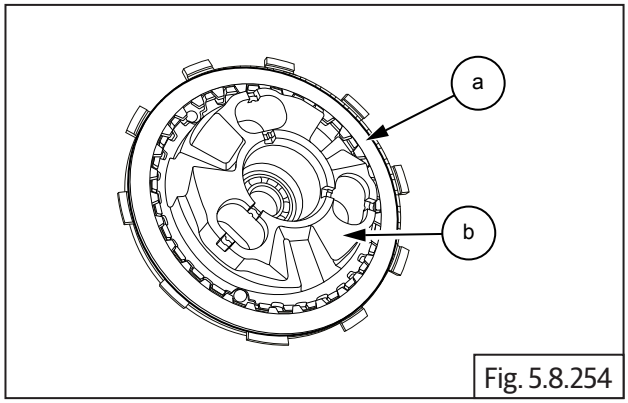

Fig. 5.8.254

- Locate 7th friction plate **(a)** with larger ID (less friction area) on clutch hub **(b)** such that its lugs are offset and between 2 lugs of the 6th friction plate.

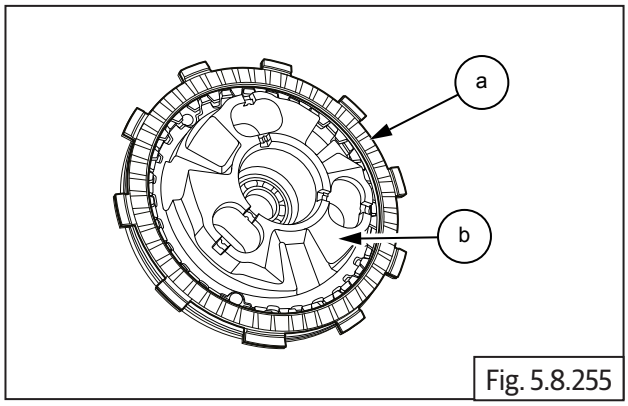

Fig. 5.8.255

- Locate clutch hub **(a)** into clutch bell duly ensuring the following:
- Insert pull rod **(b)** into clutch housing from the inside, such that the serrations on the pull rod are facing outside.
- Ensure pull rod is fully and properly seated against the bearing on the inside.

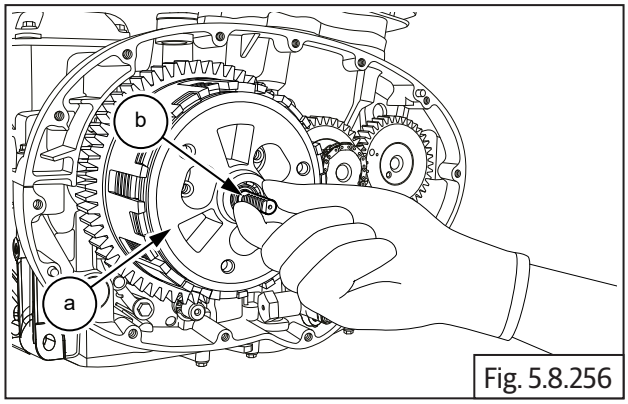

Fig. 5.8.256

- The outer lugs of 7th friction plate are correctly located in the INNER slots of the clutch housing.
- The outer lugs of 6th friction plate are correctly located in the OUTER slots of the clutch housing.
- The 3 lugs of the clutch hub are correctly positioned between the 3 slots in the clutch bell. (Gently rotate clutch hub back and forth, to match the slots of the clutch bell).
- The three mounting studs of the clutch bell are central to the slots in the clutch hub.
- Insert 3 Nos. compression springs **(a)** in hub.

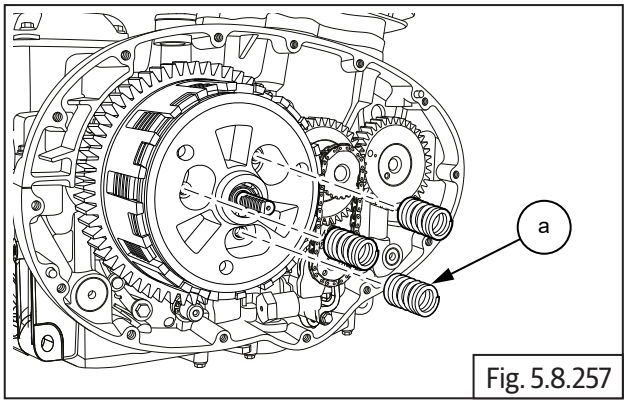

Fig. 5.8.257

- Locate pressure plate **(a)** on clutch hub with the words **"OUT"** and **"FR"** facing outside.
- Assemble 3 Nos. Hex bolts **(M6) (b)** and tighten pressure to clutch hub, sequentially to specified torque.

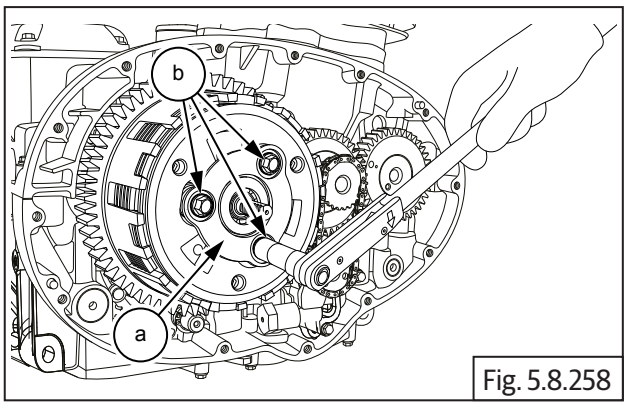

Fig. 5.8.258

	10 mm Socket with Torque wrench
Torque	10 N-m/1 kgf-m

83.8.42. Oil Level Window in Clutch Cover

- Locate new oil window **(a)** on clutch cover with the window facing towards clutch cover outer and gently press till it is seated fully inside.

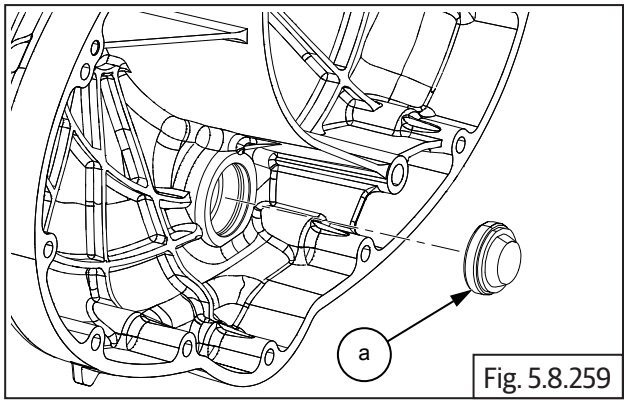

Fig. 5.8.259

- Assemble circlip **(a)** in the groove in clutch cover to lock the oil level window in place.
- Ensure circlip is correctly locked in the clutch cover.

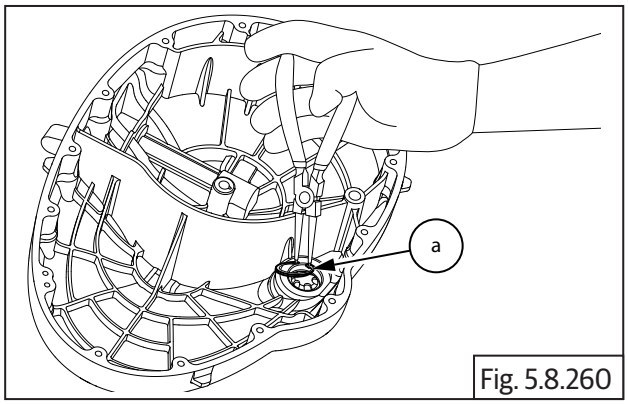

Fig. 5.8.260

	Circlip plier

83.8.43. Clutch Actuating Lever Assembly

- Ensure needle bearings **(a)** are assembled in the clutch cover.

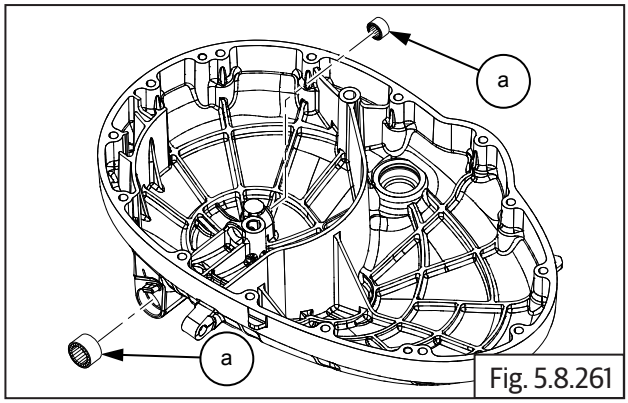

Fig. 5.8.261

SPL 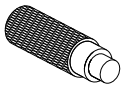	Part No: ST-27564-1
	Part Name: Clutch Act Lever top BRG Inst

SPL 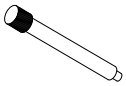	Part No: ST-27541-1
	Part Name: Clutch Act Lever Btm BRG Inst

- Insert clutch actuating shaft **(a)** into clutch cover **(b)** with the gear facing inside and the splines facing outside.

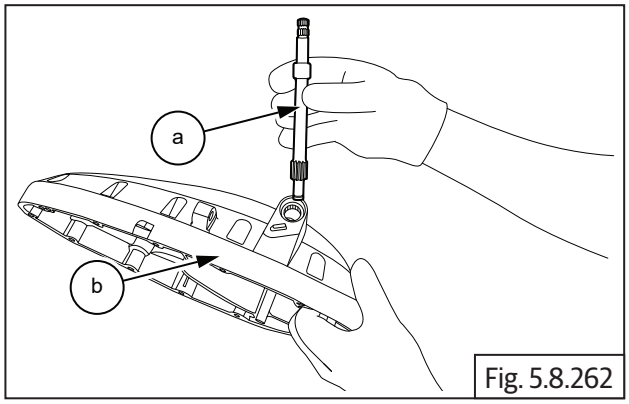

Fig. 5.8.262

- Assemble washer **(b)** on the shaft bottom inside the clutch cover.
- Assemble E-clip **(a)** in the slot in shaft bottom inside clutch cover.

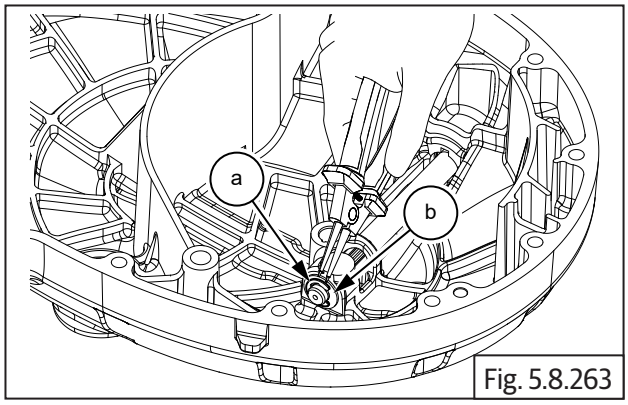

Fig. 5.8.263

	Nose plier

- Assemble new oil seal **(a)** into clutch cover at the top with the lips facing down.
- Assemble washer **(b)** above oil seal.

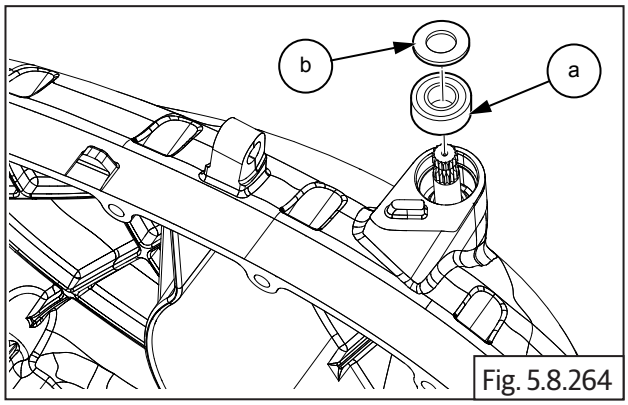

Fig. 5.8.264

83.8.44. Clutch Cover

- Ensure the 2 Nos. dowel pins **(a)** are seated properly on crankcase.

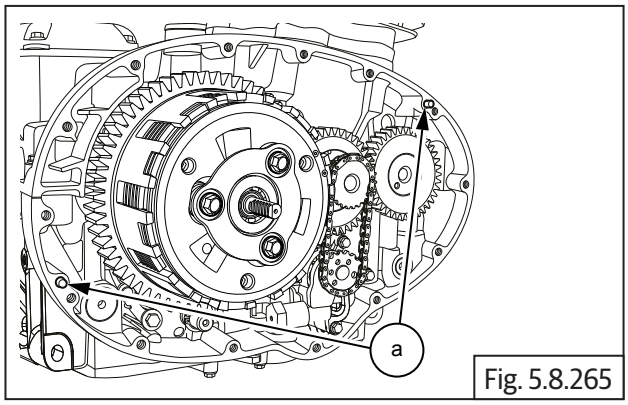

Fig. 5.8.265

- Install gasket **(a)** on crankcase if necessary smear engine oil and ensure it is properly seated on dowels. **Do not** use any sealant or adhesive.

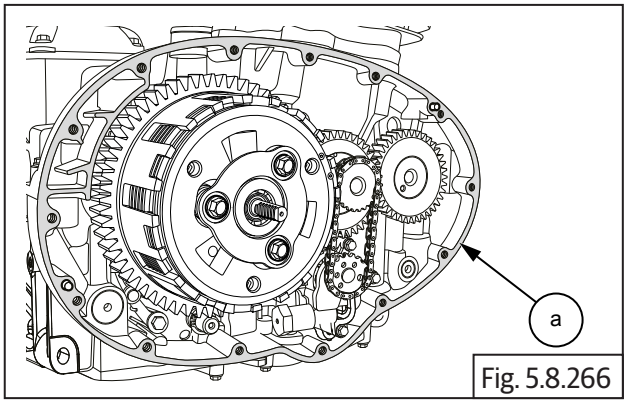

Fig. 5.8.266

- Ensure racks on the clutch pull rod is facing towards the rear of the engine.
- Hold the clutch cover **(a)** in position, rotate the clutch actuating shaft to ensure it is engaged correctly with the pull rod and gently tap cover inside to seat it on the dowels and crankcase.

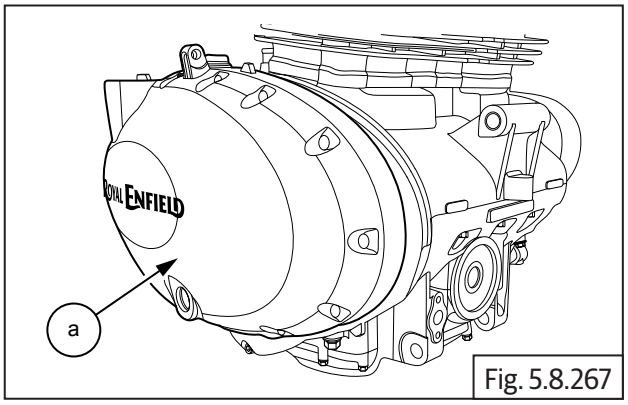

Fig. 5.8.267

- Locate 14 Nos. Hex socket bolts **(M6) (a)** on clutch cover and tighten them crisscross pattern.

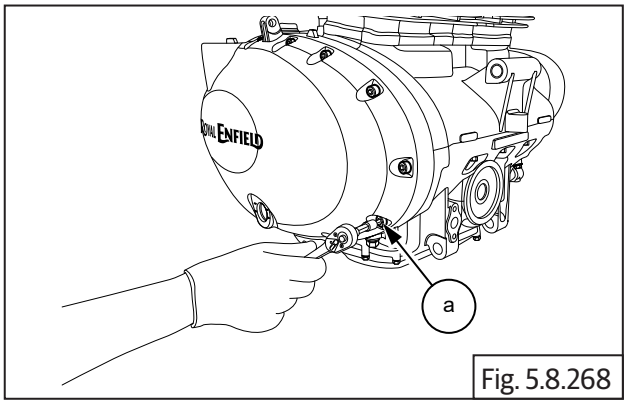

Fig. 5.8.268

	5 mm Allen socket with Ratchet

- Tighten bolts **(a)** evenly to specified torque.

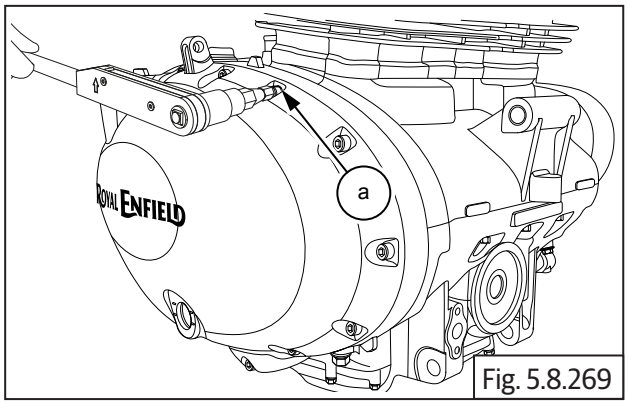

Fig. 5.8.269

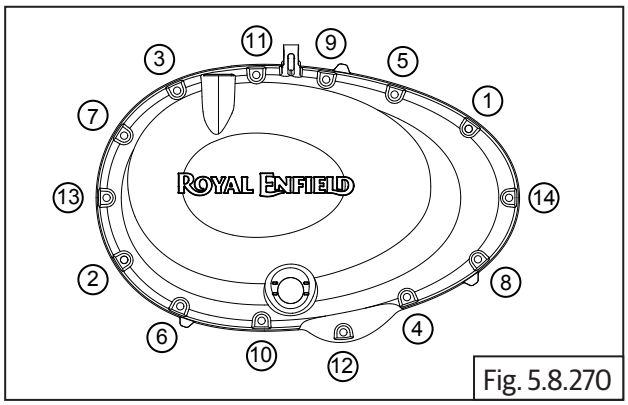

Fig. 5.8.270

	5 mm Allen socket with Torque wrench
Torque	12 N-m/1.2 kgf-m

- Assemble clutch release spring **(a)** on shaft with the "L" bend positioned against the lug **(b)** in clutch cover.

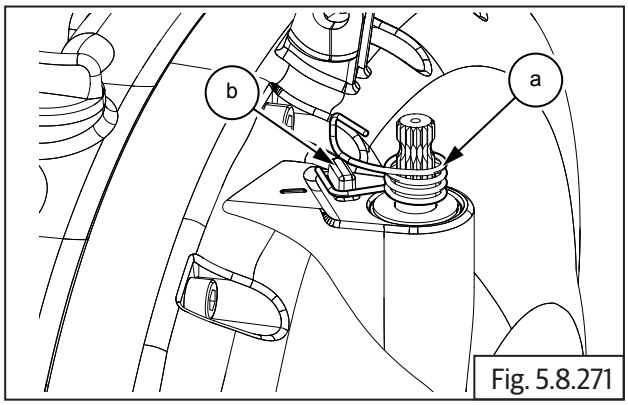

Fig. 5.8.271

- Rotate clutch shaft **(b)** clockwise till it stops. Ensure pinch bolt is sufficiently loose, position clutch lever on shaft at 11 'O' clock position and the inner side of the arm is aligned to the reference mark **(a)** on the clutch cover.

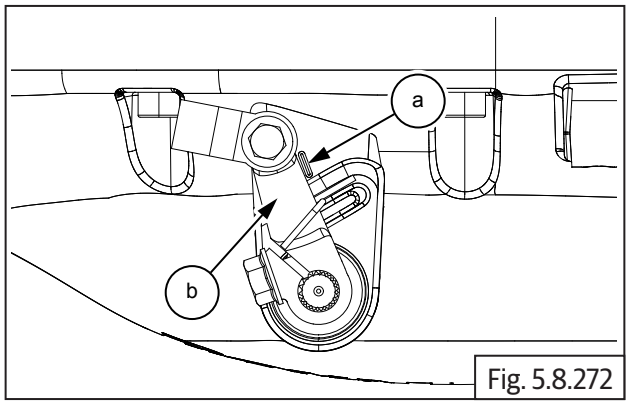

Fig. 5.8.272

- Tighten pinch bolt sufficiently such that the arm is firmly clamped on the shaft.
- Position the upper leg of the spring against the inside of the clutch release arm and check for proper spring action.

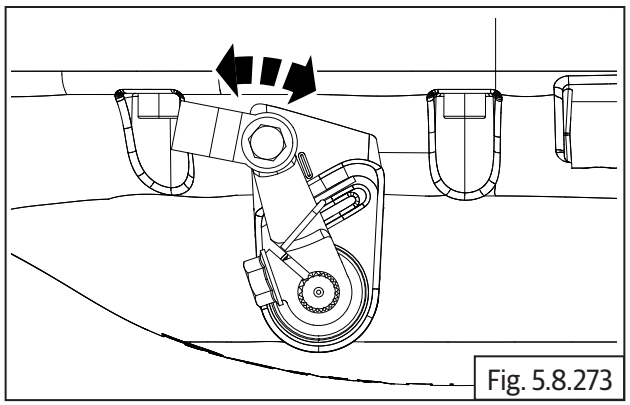
Fig. 5.8.273

83.8.45. Gear Position Sensor (GPS)

- Assemble gear position sensor on the LH side of lower crankcase duly ensuring the lug **(a)** in the GPS is located into the hole **(b)** in gear selector drum.

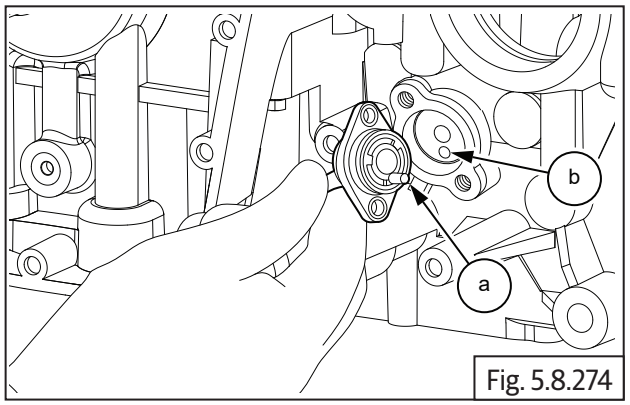

Fig. 5.8.274

- Position cable holder **(a)** over the GPS.
- Assemble 2 Nos. Hex flange head bolts **(M6) (a)** on the cable holder and tighten cable holder and GPS to the crankcase on the LH side to specified torque.

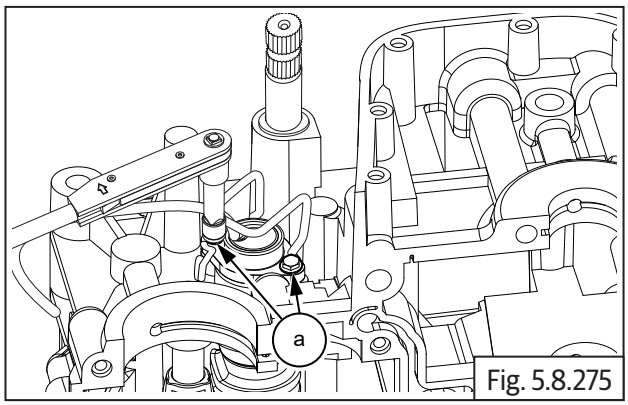

Fig. 5.8.275

	10 mm Socket with Torque wrench
Torque	12 N-m/1.2 kgf-m

83.8.46. FD Sprocket

- Assemble spacer **(a)** on drive shaft **(b)** on the LH side.

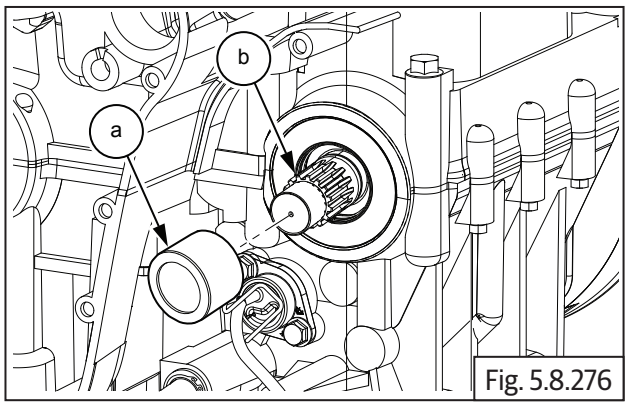

Fig. 5.8.276

- Locate oil seal **(a)** with its open end facing inwards on the crankcase on LH side and tap it in gently till the outer surface of the oil seal is flush with the crankcase **(b)**

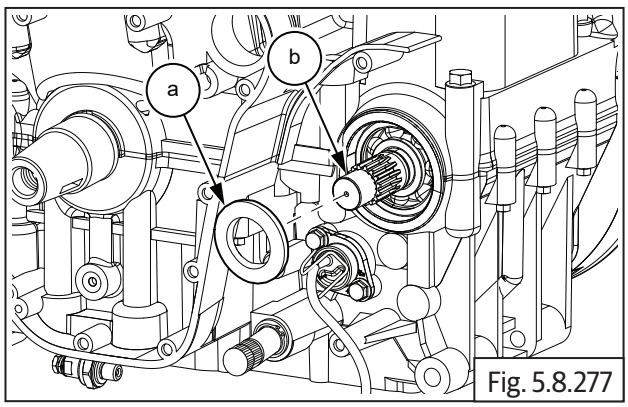

Fig. 5.8.277

- Assemble FD sprocket **(a)** on countershaft **(b)**.

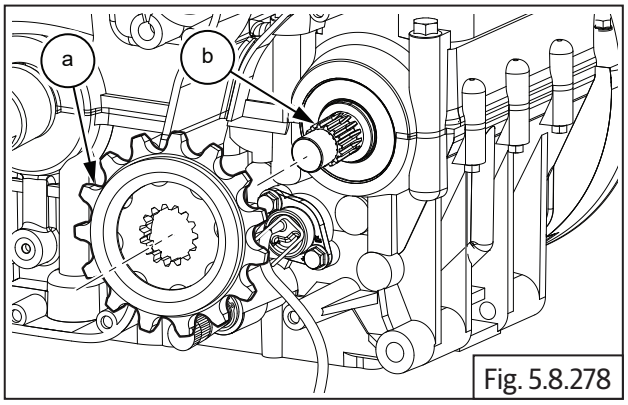

Fig. 5.8.278

- Install splined washer **(a)** on driveshaft **(b)**.

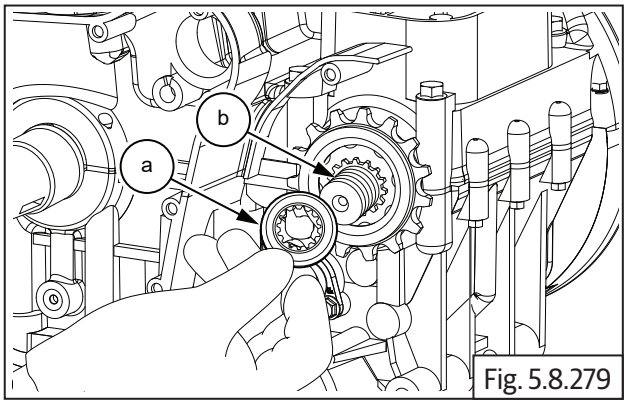

Fig. 5.8.279

- Assemble FD sprocket nut **(M20) (a)** on driveshaft .

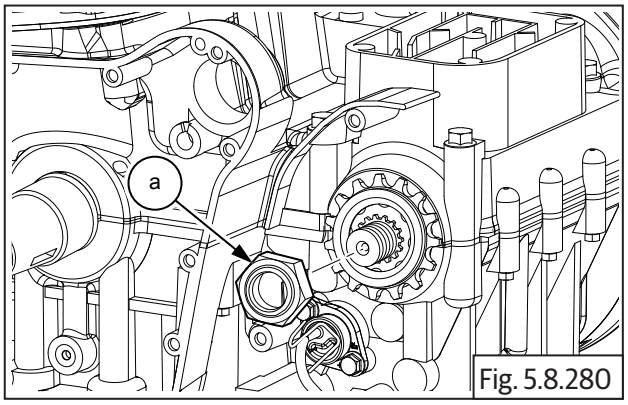

Fig. 5.8.280

- Locate special tool **(a)** over FD sprocket and tighten nut to specified torque.

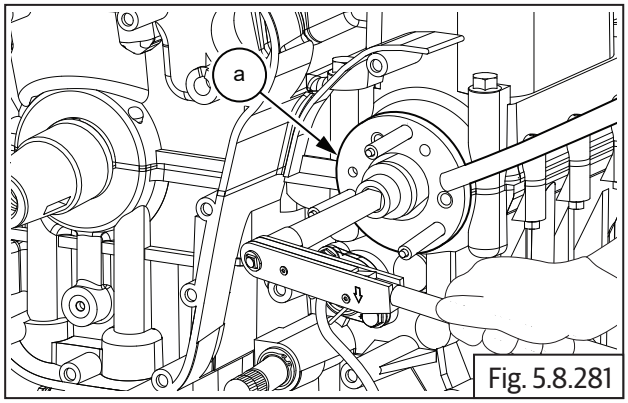

Fig. 5.8.281

SPL 	Part No: ST-27534-2
	Part Name: FD sprocket holder with Torque wrench
Torque	145 N-m/14.5 kgf-m

	30 mm Socket with Torque wrench

- Gently bend the tab washer **(a)** outer, to seat against a flat surface of the hex nut **(b)** with a flat chisel to prevent the nut from loosening during use.

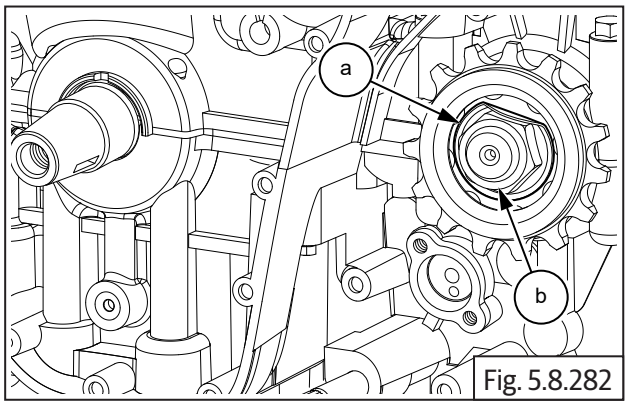

Fig. 5.8.282

	Chisel and Hammer

83.8.47. Magneto Cover Sub Assembly

Stator coil with CPS in Magneto cover

- Position stator coil **(a)** inside magneto cover such that .
  - The Crank position sensor is seated at its mounting location .
  - Magneto wires and grommet are aligned to the slot on the top of the cover .
  - The stator mounting holes are aligned to the mounting holes in magneto cover.
- Locate 3 Nos. Hex socket head bolts **(M6) (b)** in the stator coil mounting holes and tighten evenly to specified torque.

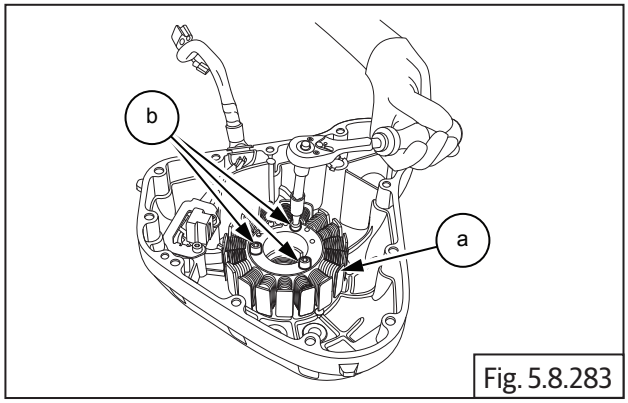

Fig. 5.8.283

	5 mm Allen socket with Ratchet
Torque	12 N-m/1.2 kgf-m

- Locate guide plate **(b)** over the CPS **(a)**, ensure the mounting holes of the guide plate, CPS are aligned to the mounting holes in magneto cover.

- Locate 2 Nos. Hex socket head screws **(M5) (c)** on the guide plate and tighten evenly to specified torque.

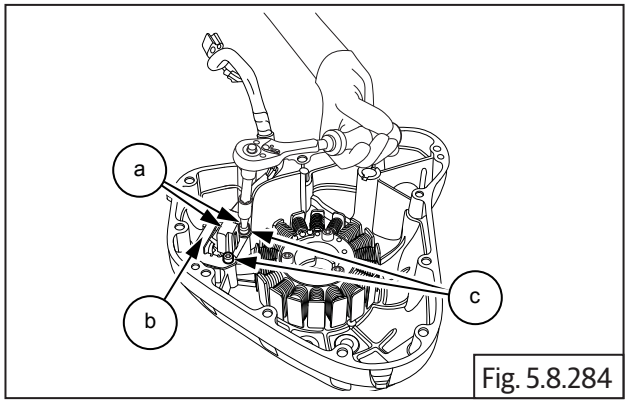

Fig. 5.8.284

	4 mm Allen socket with Ratchet
Torque	10 N-m/1 kgf-m

- Locate dowel pins **(a)** and **(b)** into crankcase.

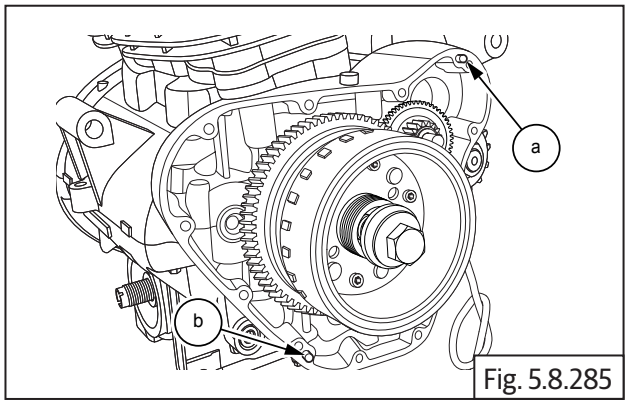

Fig. 5.8.285

- Install gasket **(a),** if necessary smear engine oil and ensure it is properly seated on dowels. **Do not** use any sealant or adhesive.

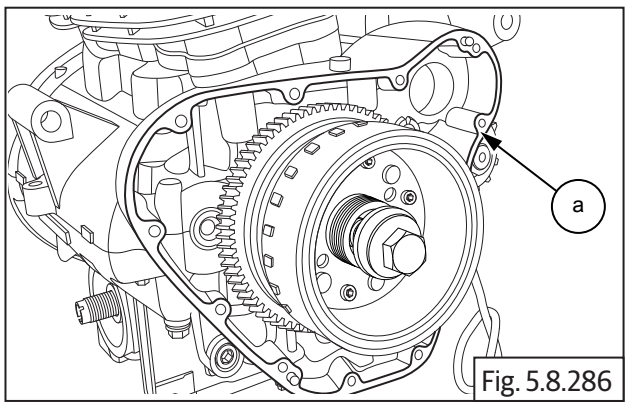

Fig. 5.8.286

- Align the magneto cover such that the stator coils are located into the magneto rotor and ensure proper seating of the cover against the gasket.

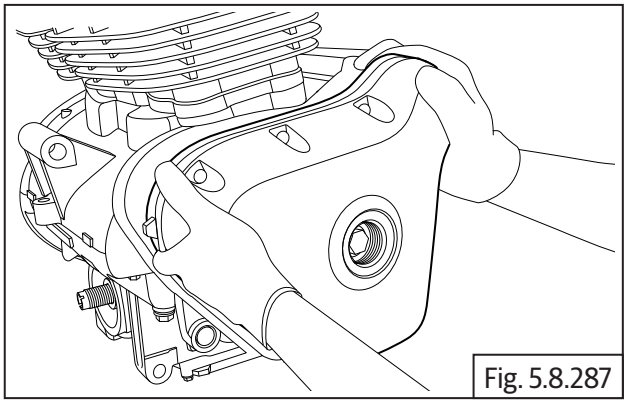
Fig. 5.8.287

⚠ CAUTION

Magnetic force from the rotor may cause misalignment of the cover during assembly. please ensure cover is centralized and seating properly before tightening the screws.

- Locate 12 Nos. Hex socket bolts **(M6) (a)** on magneto cover **(b)** and tighten it in a crisscross pattern.
- Tighten the bolts evenly to specified torque.

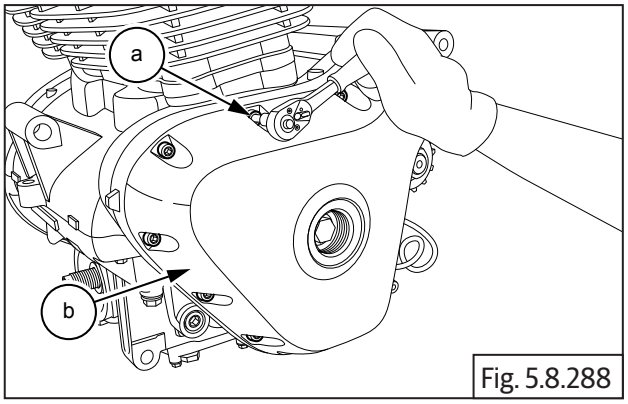

Fig. 5.8.288

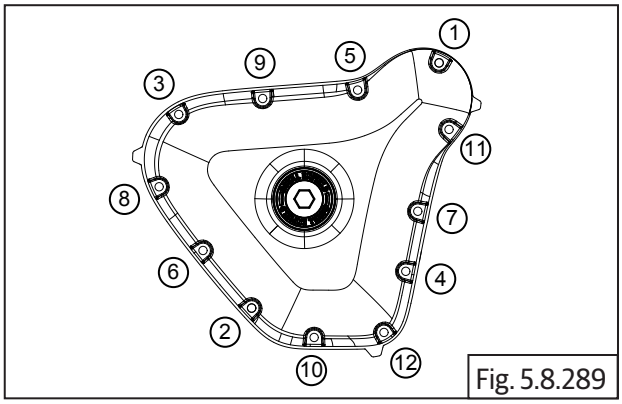

Fig. 5.8.289

	5 mm Allen socket with Ratchet
Torque	12 N-m/1.2 kgf-m

- Locate O-ring **(a)** on plug **(b)**.

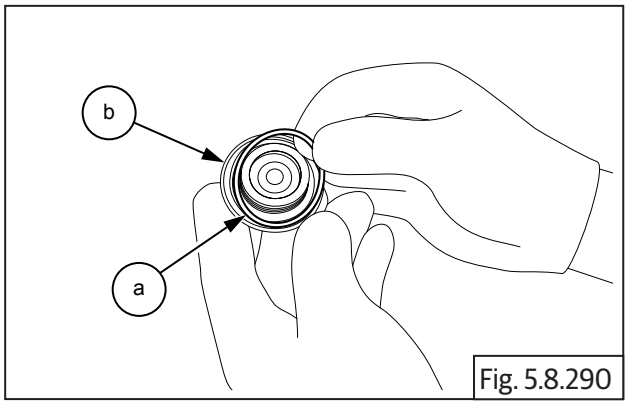

Fig. 5.8.290

- Assemble plug **(M34) (a)** on center of magneto cover and tighten it to specified torque.

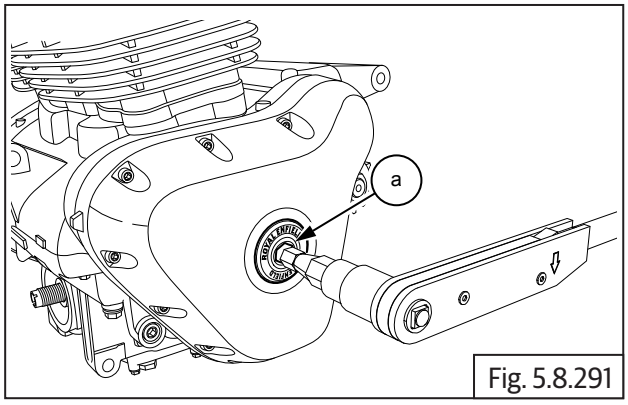

Fig. 5.8.291

	14 mm Allen socket with Ratchet
Torque	22 N-m/2.2 kgf-m

- Ensure the magneto and gear position sensor wiring is correctly routed through the crankcase assembly.

83.8.48. Starter Motor

NOTE
• **Do not** *tap on the starter motor. It may damage the internal parts.*
• *Inspect the starter driveshaft teeth for any wear-out or damages.*

- Locate starter motor **(a)** into the upper crankcase housing **(b)** LH.

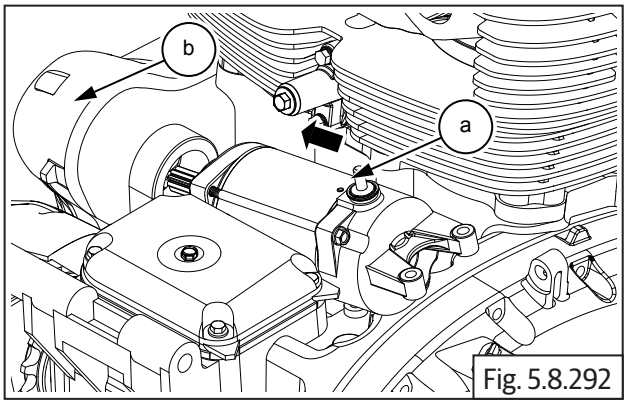

Fig. 5.8.292

- Locate and install 2 Nos. Hex head flange bolts **(M6) (a)** on starter motor **(b)**.

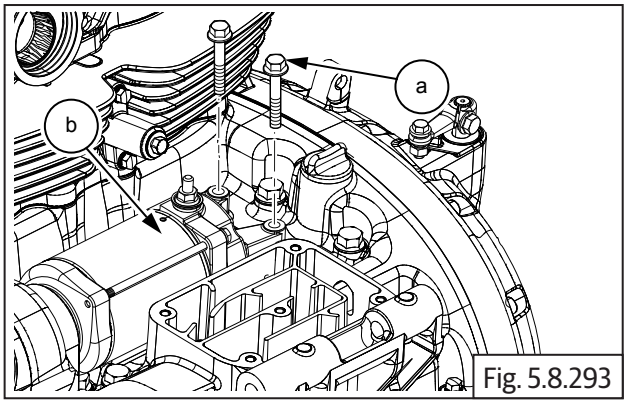

Fig. 5.8.293

	10 mm Socket with with torque wrench
Torque	10 N-m/1.2 kgf-m

83.8.49. Breather Box

- Locate gasket **(a)** on breather box cover **(b)** and assemble breather box cover on engine.

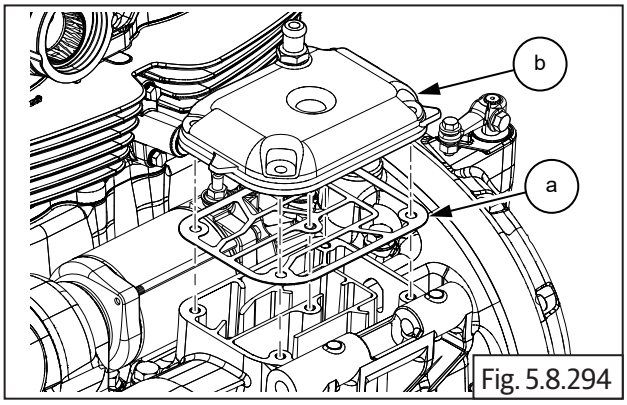

Fig. 5.8.294

- Install and tighten 5 Nos. Hex-head flange bolts **(M6) (a)** to specified torque.

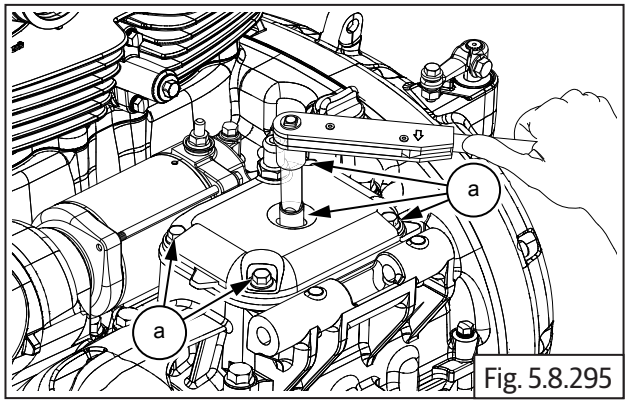

Fig. 5.8.295

	10 mm Socket with Torque wrench
Torque	12 N-m/1.2 kgf-m

- Fit breather hose **(a)** into intake manifold and install clamp.

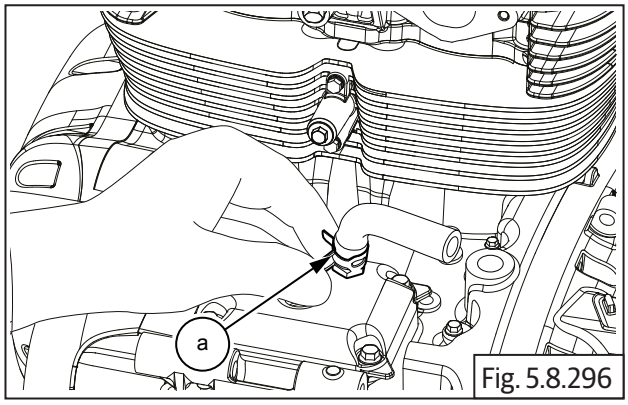

Fig. 5.8.296

83.8.50. Oil Filter

- Ensure O-ring **(a)** is seated properly over the oil filter **(b)**.
- Apply thin layer of fresh engine oil over O-ring.
- Locate oil filter into crankcase.

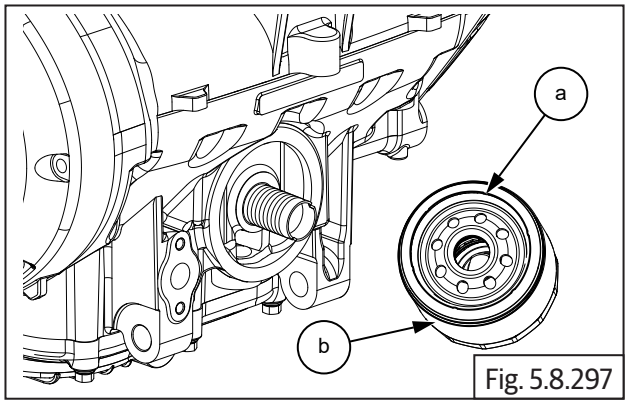

Fig. 5.8.297

- Tighten oil filter **(a)** using special tool **(b)** to specified torque.

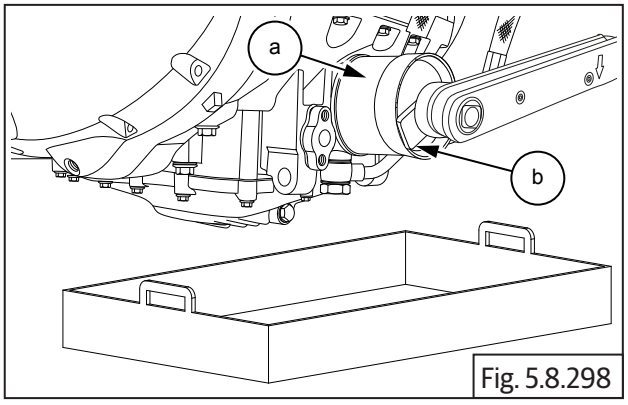

Fig. 5.8.298

SPL	Part No: ST30294/a
	Part Name: Oil Filter wrench with Torque wrench
Torque	20 N-m/2 kgf-m

ENGINE TROUBLESHOOTING

5.9 Engine Troubleshooting

Symptom	Possible Cause	Diagnosis	How to Fix	Spec. Limit
Poor/Weak Compression	Spark plug is loose	Spark plug is not tightened to torque	Check and tighten spark plug to specified torque.	
		Threads are stripped OR damaged on spark plug OR cylinder head	Inspect spark plug tightening threads in cylinder head for wear-out/damage. Replace cylinder head assembly. Inspect spark plug threads for any damages OR wear-out. Replace spark plug.	
	No clearance between rocker arm and valve stem	Tappet is adjusted too tight (Causing valves to be partially open in TDC compression stroke)	Refer tappet adjustment. Adjust valve clearance as per specifications.	Inlet: 0.08mm Exaust: 0.18mm
	Valve(s) movement sticky in valve guide(s)	Valve stem is partially seized in valve guide	Check valve(s) for free movement in valve guide(s). Replace as required.	
		Valve stem(s) bent		
	Valve(s) stuck open after compression stroke (Valve timing)	Sprocket is incorrectly aligned to cam shaft	Check and align sprocket correctly on cam shaft.	
		Cam shaft rotation is partially seized (sticky) in cylinder head	Check cam shaft for free movement in cylinder head. Replace as required.	
	Cylinder head gasket leakage	Uneven head bolt torque	Remove and inspect cylinder head/cylinder barrel seating surfaces for warpage, damage, unevenness, etc. Replace cylinder head gasket and tighten cylinder head bolts to specified torque.	Warpage: 0.01mm Torque: 1st: 15Nm (1.5kgm) 2nd: 35Nm (3.5kgm) Angular torque: 270°.
		Uneven/damaged seating surface on cylinder head/cylinder barrel		

Symptom	Possible Cause	Diagnosis	How to Fix	Spec. Limit
Poor/Weak Compression	Piston rings are worn out	Excessive gap in piston rings at the end in cylinder barrel	Inspect piston rings and cylinder barrel for excessive wear out. Replace piston rings/piston with rings. Replace cylinder barrel assembly if cylinder barrel is worn out.	Top ring 1: 0.300m Top ring 2: 0.400mm
	Piston scuffed/ partially seized in cylinder barrel	Piston scuffed/ damaged/partially seized in cylinder barrel	Inspect cylinder barrel for damages/heavy scoring and replace piston assembly AND/OR cylinder barrel as required.	
Engine Overheating	Oil level is low	External oil leakage	Inspect all joints carefully for oil leaks and rectify.	
		Excess oil consumption	Check for smoke through exhaust in hot condition, inspect valve stem seals, valve stem to guide excess clearance, piston rings wear-out, and piston/ cylinder barrel wear-out/ damage. Repair/replace accordingly.	
	Engine oil is contaminated	Non recommend engine oil is used Metal particles found in oil	Drain oil, replace oil filter and fill fresh engine oil as per Royal Enfield recommendation.	Refill qty: 3.1 Liters / 0.82 Imperial gallon.
	Engine oil has lost viscosity	Engine oil is contaminated and too thin		
	Engine oil looks too black/highly viscous	Engine oil is not changed as per recommended maintenance schedule		Replace every 10000 km / 6000 miles / 12 months.

Symptom	Possible Cause	Diagnosis	How to Fix	Spec. Limit
Engine Overheating	Low engine oil pressure	Strainer is blocked	Remove oil sump cover and strainer, Clean/replace oil strainer. Replace oil filter and fill fresh engine oil as per Royal Enfield recommendation.	
		Poor delivery by oil pump	Check oil pressure, inspect oil pump for internal blocks OR wear out. Clean & replace oil pump as required. Replace oil filter and fill fresh engine oil as per Royal Enfield recommendation.	
	Poor cooling of oil	Oil cooler fins are clogged. Oil cooler pipes have internal blocks	Clean oil cooler fins & replace if fins are damaged excessively. Check oil cooler pipes for blocks & clean/replace pipes as required.	
	No clearance between rocker arm and valve stem	Tappet(s) adjusted is too tight (Causing valves to be partially open in TDC compression stroke)	Check and adjust tappet clearances to specifications.	Inlet: 0.08mm Exhaust: 0.18mm

Symptom	Possible Cause	Diagnosis	How to Fix	Spec. Limit
Engine Overheating	Partial seizure of Engine internals	Rocker arm(s)is partially seized (sticky) in spindle(s)	Check rocker arm(s) for free movement in spindle(s).	
		Cam shaft rotation is partially seized (sticky) in cylinder head	Check cam shaft for free movement in cylinder head.	
		Valve stem is partially seized (sticky) in valve guide	Check valve(s) for free movement in valve guide(s).	
		Piston is scuffed/ damaged/partially seized in cylinder barrel	Inspect cylinder barrel for damages/heavy scoring and replace piston assembly AND/OR cylinder barrel as required.	
		Connecting rod is partially seized in crank shaft assembly	Dismantle engine, inspect all internal parts, replace as required and reassemble engine.	
		Journal bearings/ crankshaft/balancer shafts are seized		
	Transmission drag	Bearings/Gear/Bushes in the shaft are seized	Dismantle engine, inspect all internal parts, replace as required and reassemble engine.	

Symptom	Possible Cause	Diagnosis	How to Fix	Spec. Limit
Excessive Engine Oil Consumption/ Smoke (Bluish White)	Excess oil in Engine	Engine oil is filled excessively	Drain and refill oil to correct specifications. Replace oil filter. Inspect and clean air box and breather hoses for excess oil.	Refill qty: 3.1 Liters / 0.82 Imperial gallon.
	Engine oil is contaminated	Engine oil is NOT as per Royal Enfield recommendation	Drain oil, replace oil filter and fill fresh engine oil as per Royal Enfield recommendation.	Replace every 10000 km / 6000 miles / 12 months.
	Engine oil looks too black/highly viscous	Engine oil is not changed as per recommended maintenance schedule	Drain oil, replace oil filter and fill fresh engine oil as per Royal Enfield recommendation.	Replace every 10000 km / 6000 miles / 12 months.
	Relief valve in oil pump malfunction	Remove and inspect oil pump relief valve	Remove oil pump and clean OR replace the relief valve.	
	Valve stem seal failure	Valve stem seal(s) is cracked OR loose in valve guide	Inspect Stem seals; if defective replace full set.	
	Valve stem to valve guide clearance is excess	Valve guides worn out excessively	Inspect valve stem guide. If the clearance is out of specification; replace head assembly.	Valve stem service limit: 0.012mm. Valve to guide max clearance: 0.212mm.
	Valve stem is scuffed/scored	Valve stem seal(s)is cracked OR worked loose from valve guide	Inspect Stem seals; if defective replace full set.	
	Piston rings are stuck in piston ring grooves	Wet/excessive carbon build up in ring grooves in piston/on rings	Release piston ring(s) carefully from piston ring groove(s), clean and replace with new rings. Inspect cylinder for damages.	

Symptom	Possible Cause	Diagnosis	How to Fix	Spec. Limit
Excessive Engine Oil Consumption/ Smoke (Bluish White)	Piston rings are worn out	Excessive gap in piston rings at the end in cylinder barrel	Inspect piston rings and cylinder barrel for excessive wear out. Replace piston rings/ piston with rings. Replace cylinder barrel assembly if cylinder barrel is worn out.	Top ring 1: 0.300mm Top ring 2: 0.400mm Cylinder barrel/ Piston max clearance: 0.060mm
	Piston is seized in cylinder barrel	Piston is scuffed, damaged OR partially seized in cylinder barrel	Inspect cylinder barrel for damages/heavy scoring and replace piston assembly AND/OR cylinder barrel if required.	
	Partial seizure of engine internals	Connecting rod is partially seized in crank shaft assembly	Dismantle engine, inspect all internal parts, replace as required and reassemble engine.	
		Journal bearings/ crankshaft/balancer shafts are seized		

Symptom	Possible Cause	Diagnosis	How to Fix	Spec. Limit
Engine Noise Top End	Exhaust gas leak between cylinder head and exhaust pipe	Exhaust pipe(s) flange mounting nuts are loose AND/OR seal is deformed OR damaged	Dismantle exhaust pipe(s) from cylinder head; replace gasket and tighten flange mounting to specified torque.	
	Tappet adjuster(s)is worn out	"Elephant foot" on tappet adjuster(s)is worn out/pitted	Inspect “Elephant foot” and replace if worn-out OR damaged.	Inlet: 0.08mm Exhaust: 0.18mm
	Excessive clearance between rocker arm and valve stem	Tappet(s)is adjusted too loose	Check and adjust tappet clearances to specifications.	
	Rocker arm(s) movement is sticky	Rocker arm(s) is partially seized (sticky) in spindle(s)	Inspect rocker arm spindle for scoring OR damage. Inspect rocker arm spindle clearance and replace if required.	
	Rocker arm(s) has excessive clearance in spindle(s)	Rocker arm(s) and spindle(s)are worn out	Inspect and replace rocker arms set along with spindle(s).	Max clearance 0.134mm
	Excessive wear-out of Camshaft journals	Camshaft journal is partially seized OR scored	Inspect and replace cylinder head.	
	Cam chain is making noise	Cam chain/cam chain pads/cam shaft sprocket is worn-out	Inspect cam shaft sprocket, cam chain, chain pads, cam chain tensioner and replace affected parts.	
	Valve springs are damaged	Valve springs are loose OR broken	Inspect valve springs and replace full set.	

Symptom	Possible Cause	Diagnosis	How to Fix	Spec. Limit
Engine Noise Top End	Valve stem to valve guide clearance is excess	Valve stem guides are worn out excessively	Inspect valve stem guide. If the clearance is out of specs; replace the head assembly.	Max clearance 0.66mm
	Valve stem(s)is partially seized (sticky) in valve guide(s)	Inspect valve stem and guides for free movement in valve guide(s)	If the movement is not as per specs, replace the valve stem and guide.	
	Valve seat insert is loose in cylinder head	Inspect valve seat inserts for damages	Dismantle cylinder head & valves and replace.	

Symptom	Possible Cause	Diagnosis	How to Fix	Spec. Limit
Engine Noise Middle	Cam chain tensioner is defective	Cam chain tensioner spring/cam chain pad are worn-out OR broken	Replace cam chain tensioner pad assembly.	
	Piston rings are stuck in piston groove	Wet/excessive carbon is build up in the ring grooves in piston/on rings	Release piston ring(s) carefully from piston ring groove(s), clean and replace with new rings.	
	Piston rings are worn out	Excessive gap in piston rings at the end in cylinder barrel	Inspect piston rings and cylinder barrel for excessive wear out. Replace piston rings/ piston with rings. Replace cylinder barrel assembly if cylinder barrel is worn out.	Top ring 1: 0.300mm Top ring 2: 0.400mm
	Excessive clearance between Piston and barrel	Inspect Piston to Barrel clearance for given specs	Replace entire set of cylinder piston and barrel assembly.	Max dia of piston working area in cylinder: 78.030mm Piston min dia: 77.940mm
	Connecting rod small end to piston pin clearance is excess	Remove and inspect if the piston pin is loose OR scored OR seized	Replace the piston pin AND/OR connecting rod as required.	
	Connecting rod is bent	Remove and inspect valve timing; check if valve is stuck OR damaged and if the connecting rod is bent OR twisted	Replace the connecting rod AND/OR stem valve and affected parts.	

Symptom	Possible Cause	Diagnosis	How to Fix	Spec. Limit
Engine Noise Bottom	Crankshaft journal bearing is worn-out/ partially seized	Remove and inspect the bearing code and crankshaft. Check for scores OR seizures	Refer the crank shaft journal bearing code selection chart. Check the oil gallery. Replace the journal bearings and crankshaft if required.	
	Connecting rod big end journal bearing is worn-out/partially seized	Remove and inspect oil circulation and the connecting rod bigger end bearing	Refer the connecting rod bearing code selection chart. Check and replace the connecting rod big end bearing.	
	Balancer shaft journal bearing is worn-out/ partially seized	Remove and inspect the balancer shaft and journal bearing	Refer balancer shaft bearing code selection chart. Check and replace the balancer shaft bearing and replace if defective.	
	Clutch slipper spring is deformed OR broken	Remove and inspect clutch slipper spring for breakage	Replace the clutch slipper spring if worn-out.	
	Clutch outer hub collar bush/ needle bearing is defective	Remove and inspect if the clutch outer hub collar bush/needle bearing is worn out	Replace the affected parts.	
	Clutch friction plate lugs/clutch outer hub slots are defective	Remove and inspect if clutch friction plate lugs/clutch outer hub slots are worn-out OR damaged	Check and replace the friction plates and affected parts.	
	Drive shaft bearing is worn out	Remove and inspect for noisy drive shaft bearing OR excess play	Check and replace the bearing/drive shaft assembly.	

Symptom	Possible Cause	Diagnosis	How to Fix	Spec. Limit
Engine Noise Bottom	Drive shaft bush is worn out	Remove and inspect for drive shaft bush wear-out OR excess play	Check and replace the bush and shaft if worn out.	
	Counter shaft bearing is worn out	Remove and inspect for the noisy counter shaft bearing	Check and replace the counter shaft bearing and shaft if worn out.	
	Counter shaft bush is worn out	Remove and inspect counter shaft bush for any wear-out OR excess play	Check and replace the counter shaft bush and shaft if worn out.	
	Excessive clearance between splines and gears	Remove and inspect splines and gears for any wear-out OR excess play	Check and replace the gear splines and gears.	

Symptom	Possible Cause	Diagnosis	How to Fix	Spec. Limit
Engine Vibration	Engine mounting fasteners to main/cradle frame are loose	Check all mounting fasteners for looseness/stripped OR washed out threads/ broken mountings/ fasteners	Ensure engine mounting fasteners are tightened at specified torque to the main/cradle frame. Check the mounting for any cracks OR damages. Check if the adjuster and bush are as per specifications.	
	Engine steady bracket is loose	Check fasteners for looseness/stripped/ washed out threads/ broken mountings/ fasteners	Ensure engine steady bracket mounting is free of cracks. Ensure that fasteners are tightened to main frame to the specified torque.	
	Silencer mounting is loose	Inspect silencer (LH/ RH) mountings, mounting cub washers and brackets for cracks OR loose ends. Inspect if tightening torque with cylinder head and silencer pipe brackets to frame torque is as per specs	Ensure silencer (LH/ RH) mountings points, mounting cub washers and brackets are free of cracks OR loose ends. Tighten all mounting fasteners to specified torque. Ensure exhaust pipe mounting flange nuts are correctly tightened to cylinder head.	
	Foot pegs are loose	Check foot peg mounting fasteners for looseness/stripping/ washed out threads/ broken fasteners	Tighten foot pegs to specified torque and replace defective parts.	
	Balancer shaft/ crankshaft run-out	Dismantle engine and check balancer shaft for any run out/ bearings damage	Replace affected bearings/ balancer shaft.	

Symptom	Possible Cause	Diagnosis	How to Fix	Spec. Limit
Clutch is Spongy/Soft	Clutch inner cable is partially damaged	Inspect clutch cable top & bottom ends for damaged inner cable	Replace Clutch cable.	
	Clutch has excess free play	Clutch cable free play is more than specs at handle bar end	Adjust clutch free play to 2-3mm.	2-3 mm
	Engine oil has lost viscosity	Check if engine oil is contaminated and too thin	Drain oil, replace oil filter and fill fresh engine oil as per Royal Enfield recommendation.	Replace every 10000 km / 6000 miles / 12 months.
	Clutch activating lever assembly is loose on clutch shaft	Check if clutch lever clamping bolts are loose	Tighten clamping bolt on clutch lever as per specs.	
		Inspect splines on clutch shaft and lever for splines damage/ worn out	Replace clutch lever and shaft.	
	Clutch springs are weak	Inspect clutch release springs for pre-setting/length reduction	Inspect clutch springs for correct free length and replace if out of specs.	
	Clutch springs are broken	Inspect clutch springs for any damages	Replace clutch springs.	
	Clutch friction plates have become soggy	Inspect clutch friction plate material for softness/damages/ puffed up condition	Replace clutch friction plate/steel plates.	
	Clutch center/ hub is worn out	Inspect clutch center and hub splines area for damages/wear out	Replace clutch assembly.	
	Clutch assembly center nut is loose	Inspect if clutch center fixing nut is loose/ threads are washed out	Replace nut/main shaft.	

Symptom	Possible Cause	Diagnosis	How to Fix	Spec. Limit
Clutch is Hard	Clutch inner cable is stuck/ has hard movement in outer cable	Inspect inner clutch cable for free movement in outer cable	Lubricate clutch cable and inspect for free movement. If problem still exists, replace clutch cable.	
	No free play in clutch lever at handle bar end	Clutch cable free play is less than specs	Adjust clutch free play to 2-3mm.	2-3 mm
	Engine is contaminated	Engine oil is not changed as per recommended maintenance schedule OR Engine oil is NOT as per Royal Enfield recommendation	Drain oil, replace oil filter and fill fresh engine oil as per Royal Enfield recommendation.	Replace every 10000 km / 6000 miles / 12 months.
	Excess Oil in Engine	Engine oil is filled excessively	Drain and refill oil to correct specifications.	
	Clutch lever movement is sticky in cover RH	Check free movement of clutch shaft in cover RH	Remove clutch shaft from cover RH, inspect, lubricate and reassemble.	
		Check if clutch shaft is seized in cover RH	Replace clutch shaft in cover RH.	

Symptom	Possible Cause	Diagnosis	How to Fix	Spec. Limit
Clutch Slip	Clutch has excess free play	Inspect clutch cable top & bottom ends for frayed strands of the inner cable	Replace clutch cab;e if damaged. Adjust clutch free play to 2-3mm.	2-3 mm
	Clutch lever movement is sticky in cover RH	Check free movement of clutch shaft in cover RH	Remove clutch shaft from cover RH, inspect, lubricate and reassemble.	
		Check if clutch shaft is seized in cover RH	Replace clutch shaft in cover RH.	
	Clutch springs are weak	Inspect clutch release springs for presetting/ length reduction	Replace if out of specs.	
	Clutch springs are broken	Inspect clutch springs for any damages	Replace clutch springs.	
	Clutch friction plates have become soggy	Inspect clutch friction plate material for softness/damages/ puffed up condition	Replace clutch friction plate/steel plates.	
	Clutch center/ hub is worn out	Inspect clutch center and hub spline area for damages/wear out	Replace clutch assembly.	
	Clutch assembly center nut is loose	Inspect if clutch center fixing nut is loose/ threads are washed out	Replace nut/main shaft.	

Symptom	Possible Cause	Diagnosis	How to Fix	Spec. Limit
Clutch juddering	Clutch cable is brittle	Inspect clutch cable top & bottom ends for frayed strands of the inner cable	Replace clutch cable.	
	Clutch lever movement is sticky in cover RH	Check free movement of clutch shaft in cover RH	Remove clutch shaft from cover RH, inspect, lubricate and reassemble.	
		Check if clutch shaft is seized in cover RH	Replace clutch shaft in cover RH.	
	Uneven wear of clutch friction plates	Friction plates OR steel plates are worn-out, warped OR dragging	Remove clutch friction and steel plates. Inspect, lubricate and reassemble. Replace if necessary.	
	Clutch steel plate movement on clutch hub is abrupt			
	Clutch steel plate warped	Check if steel plate is warped OR worn-out	Remove clutch steel plates, inspect, lubricate and reassemble. Replace if necessary.	
	Clutch judder spring is broken	Inspect clutch judder springs for damage	Replace clutch judder springs.	
	Clutch release spring is sticky	Inspect if the clutch release spring is not releasing properly	Remove, inspect and replace.	
Noise in Clutch	Clutch Spring is broken	Inspect if the clutch is also broken	Replace the spring and clutch if required.	
	Clutch outer hub collar bush/ needle bearing is worn-out	Inspect if Clutch outer hub collar bush/needle bearing for damages	Replace hub collar bush AND/OR needle bearing.	
	Clutch friction plate lugs/clutch outer hub slots are worn out	Inspect clutch friction plate and outer hub for damages	Replace Clutch friction plate lugs AND/OR clutch outer hub.	

Symptom	Possible Cause	Diagnosis	How to Fix	Spec. Limit
Down-Shift/Up-Shift Travel Is Excessive	Gear link is defective	Inspect if the gear link is worn out	Remove, lubricate link and reassemble. Replace if necessary.	
	Gear link adjustment is incorrect	Inspect if gear lever link adjustment is to the specs	Adjust the gear lever link to the specs. Replace if required.	
Gear is Hard to Shift	Gear shift stopper is defective	Inspect gear shift stopper roller for wear-out/damage	Remove and lubricate shifter and reassemble. Replace if necessary.	
	Gear shift stopper spring is defective	Inspect gear shift spring for preset/ breakage	Replace the spring.	
Gear is Under Engaging	Gear link adjustment is incorrect	Inspect if gear lever link adjustment is to the specs	Adjust the gear lever link to the specs. Replace if required.	
	Gear shift stopper movement is sticky	Remove and inspect shift stopper and pin for damage OR wear-out	Replace the shift stopper AND/OR pin.	
	Shifter fork movement is sticky	Inspect if shifter fork has sticky movement in spindle/selector drum	Replace the shifter fork.	

Symptom	Possible Cause	Diagnosis	How to Fix	Spec. Limit
Gear Engagement is Hard	Oil level is low/ engine oil has lost viscosity	Engine oil is contaminated and too thin	Drain oil, replace oil filter and fill fresh engine oil as per Royal Enfield recommendation.	
	Excessive clutch free play	Clutch cable free play is more than specs at handle bar end	Adjust free play and replace clutch cable if necessary.	
	Gear shaft is bent	Inspect if the gear shaft is sticky OR bent	Replace gear shaft.	
	Shifter fork movement and selector drum are sticky	Inspect shifter fork free movement in selector drum	Replace the selector drum.	
	Sliding gear movement on counter-shaft/ drive shaft is sticky	Inspect if gear sliding is sticky	Replace sliding gears on counter shaft and drive shaft.	
	Gear shift stopper movement is sticky	Inspect if shifter fork stopper is worn-out	Remove, lubricate and reassemble shifter fork. Replace if necessary.	
	Gear shift shaft is bent/stuck	Remove and inspect shaft run-out	Replace gear shaft.	
Gear Engages and Slips	Gear shift stopper is worn-out	Inspect gear shift stopper	Remove, lubricate shifter and reassemble. Replace if necessary.	
	Gear shift stopper spring is broken	Inspect gear shift spring for preset/ breakage	Check and Replace the spring.	
	Gear link adjustment is incorrect	Inspect if gear lever link adjustment is to the specs	Adjust the gear lever link to the specs. Replace if required.	
	Sliding gear dogs are worn-out	Inspect sliding gear dogs	Remove and replace if necessary.	

Symptom	Possible Cause	Diagnosis	How to Fix	Spec. Limit
Gear is not Engaging	Engine oil has lost viscosity	Engine oil is contaminated and too thin	Drain oil, replace oil filter and fill fresh engine oil as per Royal Enfield recommendation.	
	Gear teeth are broken	Inspect gear teeth	Remove, inspect and replace gear and affected parts.	
	Gear shift stopper is jammed	Inspect the movement of the stopper	Remove, inspect and replace the stopper id necessary.	
	Selector fork is jammed on spindle	Remove and check the fork in the drum	Check, lubricate and reassemble OR replace if required.	
	Selector fork is jammed in selector drum	Check for free traveling of the fork in the selector drum	Replace the drum and affected parts.	
	Gear shift shaft is bent/stuck	Dismantle and check the run-out	Replace the gear selector shaft.	
Gear Lever is not Returning After Shifting	Gear shift shaft spring is broken	Check operation of gear selector shaft spring AND/OR lock	Remove and replace the spring.	
	Gear shift shaft is bent/stuck	Inspect gear shift shaft guide movement	Replace gear shift shaft and affected parts.	

Symptom	Possible Cause	Diagnosis	How to Fix	Spec. Limit
Noise in Gear Box	Engine oil has lost viscosity	Engine oil is contaminated and too thin	Drain oil, replace oil filter and fill fresh engine oil as per Royal Enfield recommendation.	
	Gear teeth are broken	Inspect gear teeth	Remove, inspect and replace gear and affected parts.	
	Drive shaft bearing is worn-out	Check the bearing sound and wear-out	Dismantle, inspect the drive shaft bearing and replace.	
	Drive shaft bush is worn out	Check the bush play and seating	Remove, inspect and replace drive shaft push.	
	Counter shaft bearing is worn out	Check if the counter shaft bearing has excess play	Remove, inspect and replace counter shaft bearing and shaft if required.	
	Counter shaft bush is worn out	Check if the counter shaft bush is worn-out OR has excess play	Remove, inspect and replace counter shaft bush and shaft if required.	
	Excessive clearance between splines and gears	Check if clearance is as per specifications	Remove, inspect and replace the affected parts.	

CHASSIS

6.CHASSIS

CONTENTS PAGE

6.1. AIR FILTER BOX ASSEMBLY 343

6.2. CONTROL CABLES 355

6.3. HANDLEBAR 370

6.4. EXHAUST PIPES AND SILENCERS 387

6.5. FOOTRESTS/STANDS/SAREEGUARD 394

6.6. MUDGUARD AND NUMBER PLATES 415

6.7. SIDE PANELS AND RIDER SEAT 431

6.8. WHEELS 436

6.9. SUSPENSION 466

6.10. TROUBLESHOOTING 507

AIR FILTER BOX ASSEMBLY

CONTENTS PAGE

6.1 Air Filter Box Assembly 346

Dismantling 346

6.1.1 Air Filter Element 346

6.1.2 Air Filter Box Assembly 346

Inspection 349

Assembly 350

6.1.3. Air Filter Box Assembly 350

6.1.4 Air Filter Element 353

Troubleshooting 354

Air Filter Box Assembly

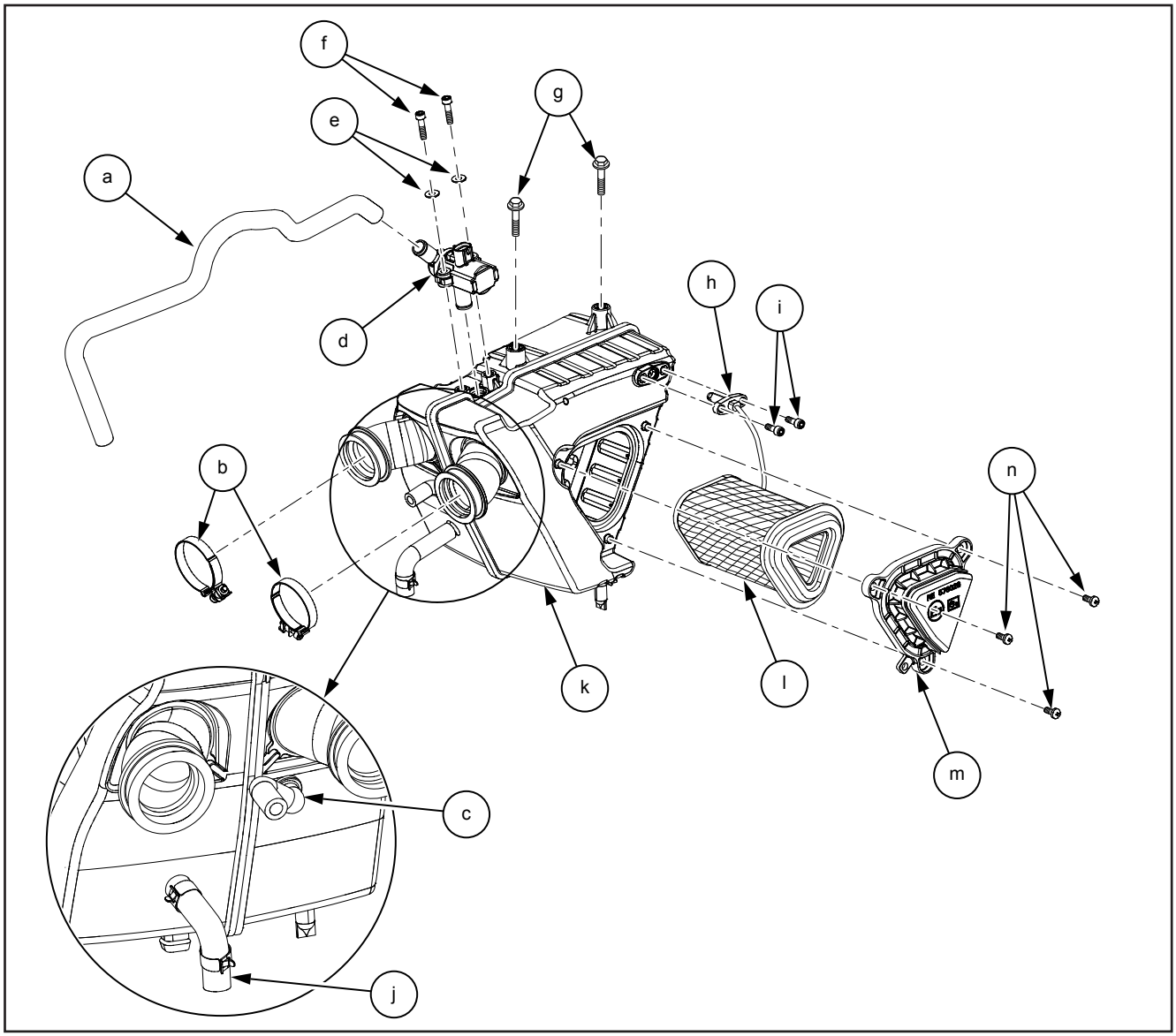

Item No.	Description	Quantity	Item No.	Description	Quantity
a	Hose, Secondary Air	1	h	Intake Air Temperature (IAT) Sensor	1
b	Clip-Adapter	2	i	Hex Socket Head Cap Screw M5	2
c	Idle Air Control Hose	1	j	Breather Hose	1
d	Air Cut Valve	1	k	Air Filter Box Assembly	1
e	Washer, M5	2	l	Element Air Filter	1
f	Hex Socket Head Cap Screw M5 x 0.8,22l	2	m	Inlet Cover, Air Box	1
g	Hex Head Flange Bolt (M10)	2	n	Pan Head Screw M5 x 12	3

6.1 Air Filter Box Assembly

Dismantling

6.1.1 Air Filter Element

⚠ CAUTION

Ensure the motorcycle is upright on a firm and flat surface.

- Ensure ignition switch and engine stop switch are in OFF position.
- Remove the following parts:
  - Side panel RH (section 6.7.1).
  - Rider seat (section 6.7.2).
  - Side panel LH (section 6.7.4).
- Gently support air filter element cover and loosen and remove 3 Nos. pan head screws **(a)** from air filter box assembly.

NOTE

- *DO NOT tap or apply excessive force on the screws.*

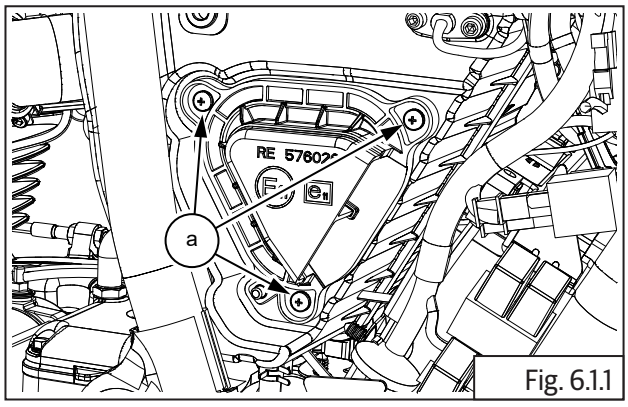

Fig. 6.1.1

	Phillips screw driver

- Remove air filter element cover **(a)** from air filter box assembly.

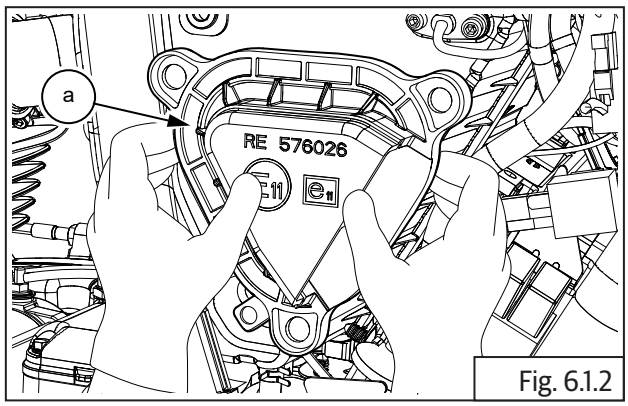

Fig. 6.1.2

- Gently pull out air filter element **(a)** from air filter box assembly.

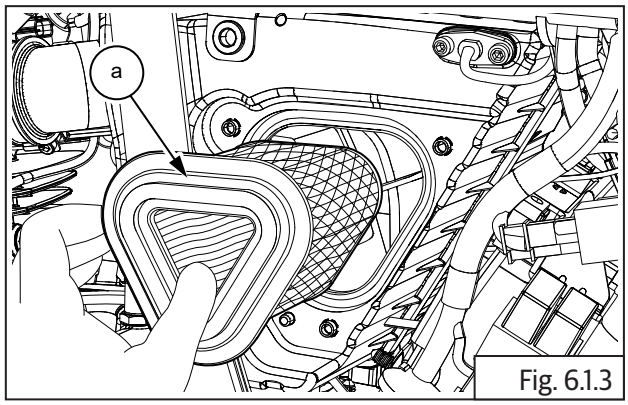

Fig. 6.1.3

6.1.2 Air Filter Box Assembly

- Ensure ignition switch and engine stop switch are in OFF position.
- Remove the following parts:
  - Side panel RH (section 6.7.1).
  - Rider seat (section 6.7.2).
  - Side panel LH (section 6.7.4).
  - Fuel tank dismantling (section 7.1.1).

⚠ CAUTION

Ensure the following:

Fuel feed and return hose is disconnected from the fuel rail.

Fuel is drained completely from fuel feed hose.

Disconnect the EVAP and drain hoses.

Wiring couplers to fuel pump and low fuel sensor are disconnected.

⚠ WARNING

Gasoline is extremely flammable and highly explosive. Improper handling can lead to fatal accident or serious injury.

- Remove utility box from frame RH. Refer electrical system (section 11.5.1).
- Disconnect Battery terminals and remove battery (section 11.5.1).
- Remove Battery tray (section 11.5.2).
- Disconnect ECU wiring coupler and remove ECU (section 10.1.1).

⚠ CAUTION

Ensure the locks are fully lifted up and released, before disconnecting wiring connectors from the ECU.

Ensure the locks are handled with care and do not get damaged or broken.

Damaged or broken locks will result in loose connections and cause the ECU to fail.

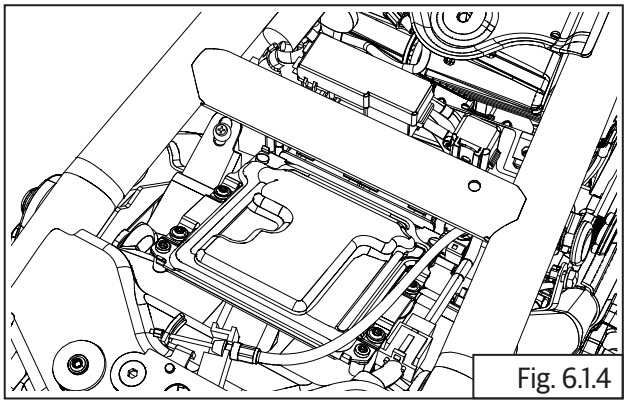

Fig. 6.1.4

- Remove the following parts:
  - Rear wheel assembly (section 6.8.3).
  - Rear mudguard infill cover (section 6.6.7).
- Disconnect intake air temperature sensor wiring coupler **(a)**.

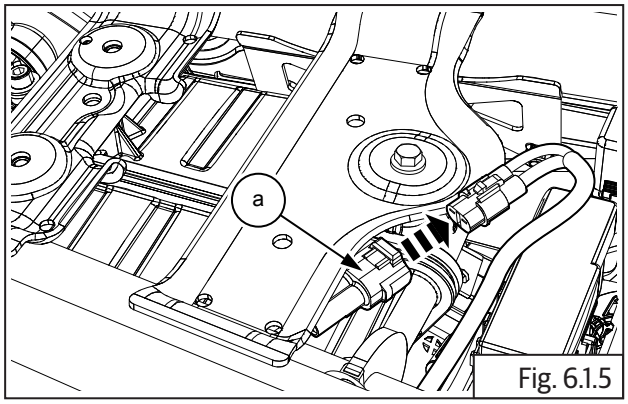

Fig. 6.1.5

- Support intake air temperature (IAT) sensor, loosen and remove 2 Nos. Hex socket head bolts **(M5) (a)** holding intake air temperature (IAT) sensor to air filter box assembly on the LH side.

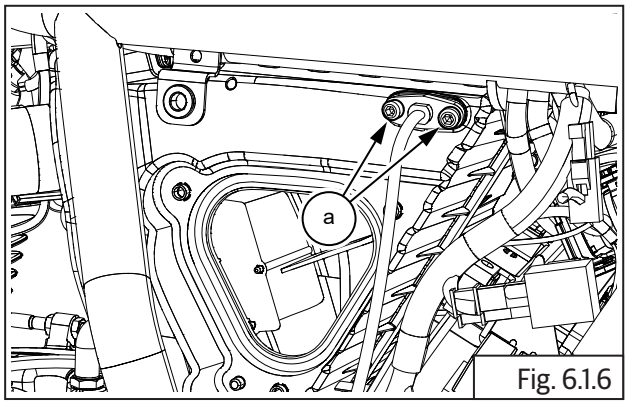

Fig. 6.1.6

	4 mm Allen key

- Gently pull out intake air temperature sensor **(a)** from air filter box assembly.

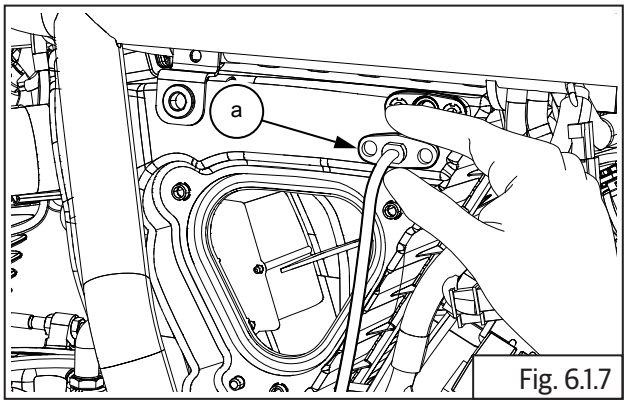

Fig. 6.1.7

- Disconnect air cut valve (ACV) wiring connector **(a)**.

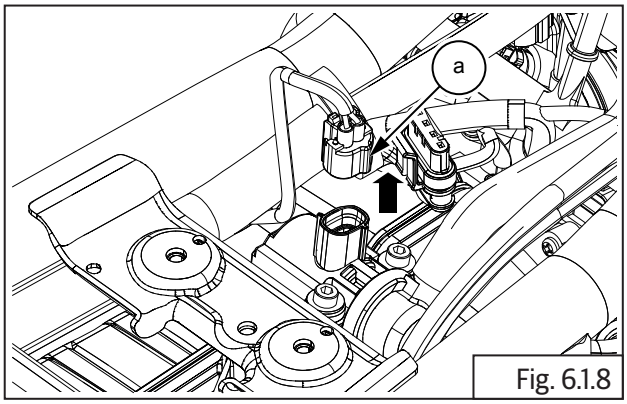

Fig. 6.1.8

- Gently pull out and remove hose **(a)**, secondary air from air cut valve.

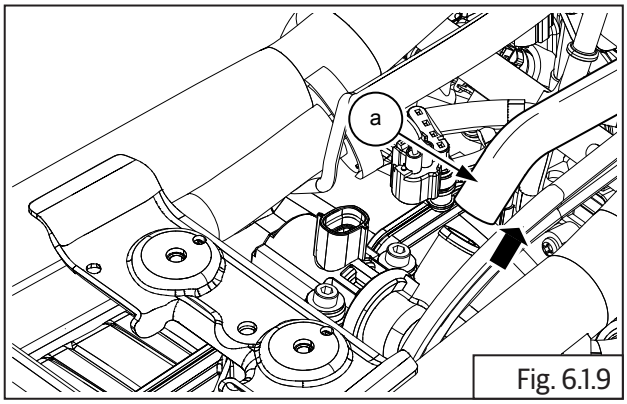

Fig. 6.1.9

- Support air cut valve, loosen and remove 2 Nos. Hex socket head cap screws **(M5) (a)** holding air cut valve to air filter box assembly on the top RH side.
- Gently pull out air cut valve **(b)** from air filter box assembly.

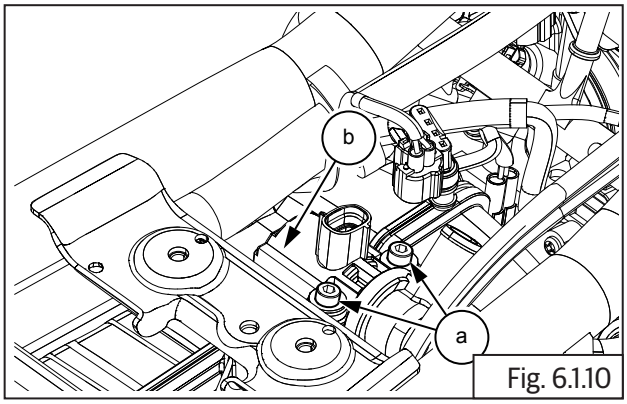

Fig. 6.1.10

	4 mm Allen socket with Ratchet

- Release clip **(a)** and disconnect breather hose **(b)** from air filter box assembly.

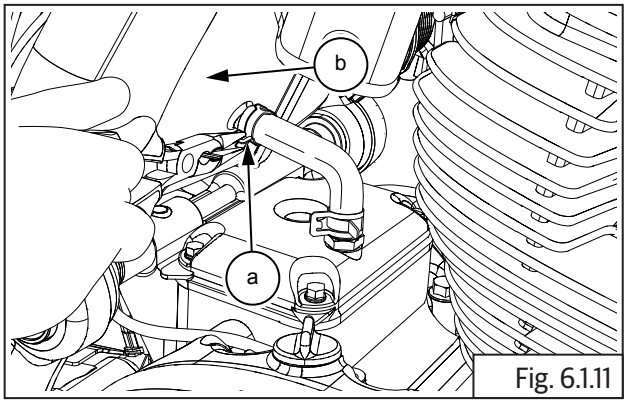

Fig. 6.1.11

	Nose plier

- Loosen 2 Nos. Hex socket screws **(M5) (a)** sufficiently on the worm clips **(b)** on the LH and RH bellows between throttle body **(c)** and air filter box assembly.

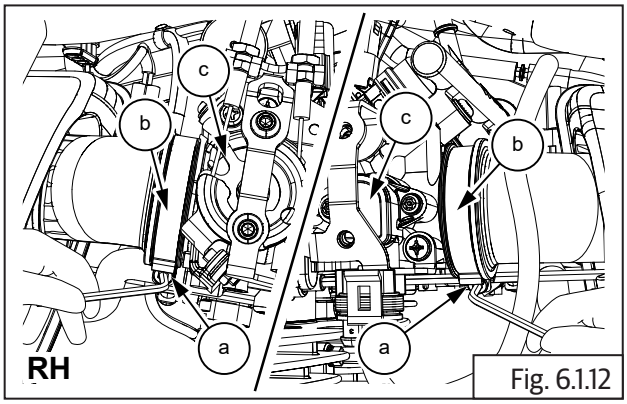

Fig. 6.1.12

	4 mm Allen key

- Disconnect idle air control (IAC) hose **(a)** from throttle body **(b)**.

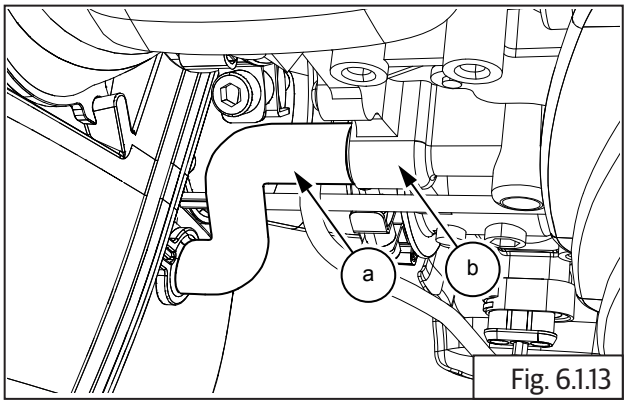

Fig. 6.1.13

- Loosen and remove 2 Nos. pan head screws **(a)** on air filter box assembly RH side and remove clamps **(b)** provided for routing of the brake hoses and wiring harness.

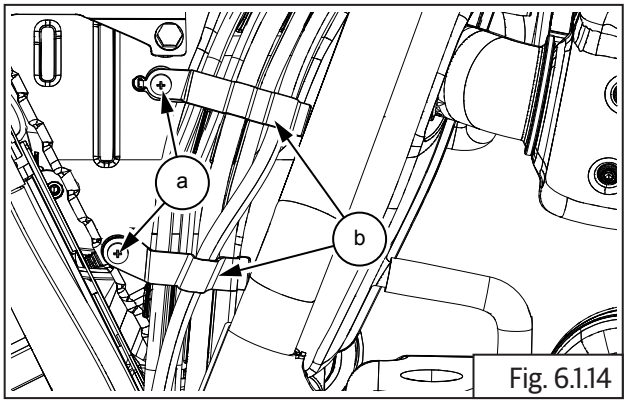

Fig. 6.1.14

- Loosen and remove 2 Nos. Hex flange head bolts **(M6) (a)** from frame above air filter box assembly top **(b)**.

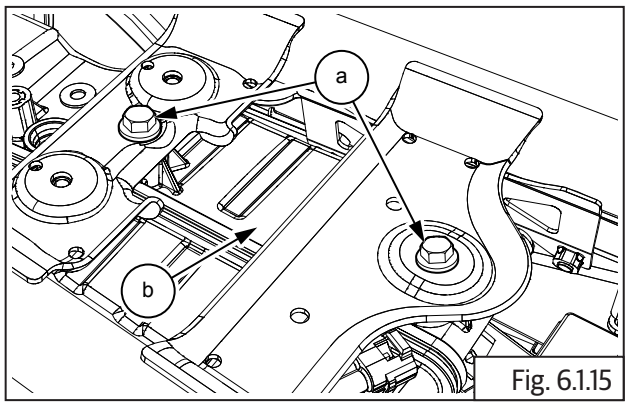

Fig. 6.1.15

	10 mm Socket with Ratchet

- Ensure worm clips on inlet bellows are sufficiently loose and bellows are not stuck on throttle body.
- Gently remove air filter box assembly **(a)** from frame by pulling to the rear to release the bellows from the throttle body.

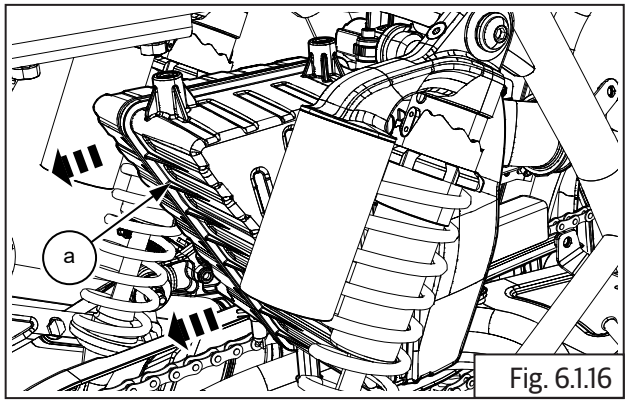

Fig. 6.1.16

Inspection

- Inspect air filter box assembly for any damages or cracks.
- Inspect air intake bellows for any damages, cracks and/or brittleness of the bellows.
- Inspect rubber seals, hoses for cuts, cracks or damages. Replace seals and rubber parts whenever they are removed.

- Inspect air filter element carefully for any deformation, damages, heavy clogging with dirt, soggy condition, and/or foreign particles embedded in the element. Replace if any of these conditions are observed.

Clean

- Clean air filter element **(a)** after first 500 Kms (300 Miles) and later based on the peroidic maintenance schedule OR more frequently if motorcycle is used in dusty/off-road conditions.
- Gently tap filter element with minimum force to dislodge heavy/embedded dust particles.
- Using low pressure compressed air, blow air from out side to inner side to remove fine dust particles.

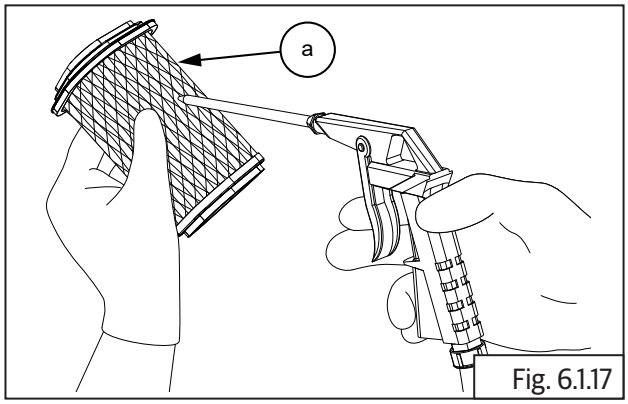

Fig. 6.1.17

	Air gun

⚠ CAUTION

DO NOT wash the element in water, gasoline or any solvents.

- Clean the air filter housing internals, with a soft damp cloth to remove dust.

Replace

- Replace all O-rings, rubber beadings, seals, gaskets, rubber parts etc., whenever air filter assembly is serviced.
- Replace air filter element every 20,000 Kms 12,000 Miles) or earlier if motorcycle is used in dusty/off road conditions.

Assembly

6.1.3. Air Filter Box Assembly

- Ensure worm clips on inlet bellows are sufficiently loose and correctly located in groove of bellows.
- Locate air filter box assembly **(a)** in frame from the rear, duly ensuring bellows are aligned correctly to throttle body.

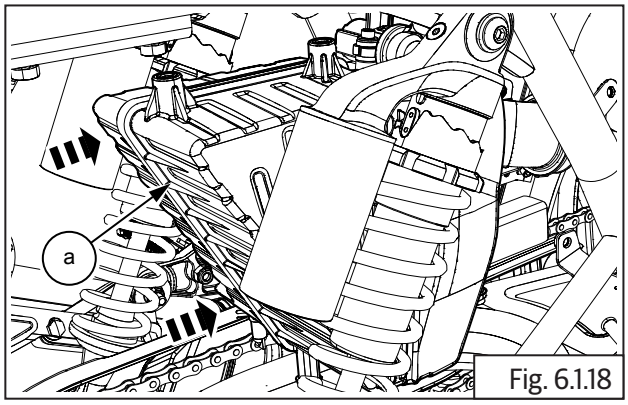

Fig. 6.1.18

- Locate bellows LH and RH on throttle body and ensure they are seated fully on throttle body.
- Align top mounting holes of air filter box assembly with mounting holes in frame.
- Tighten air filter box assembly **(b)** to frame using 2 Nos. Hex flange head bolts **(M6) (a)**.

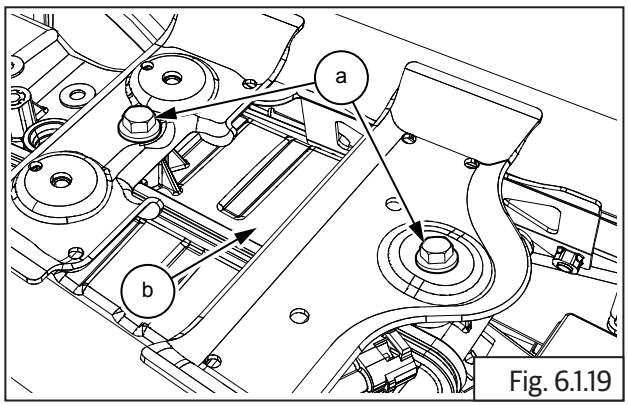

Fig. 6.1.19

	10 mm Socket with Ratchet
Torque	3 N-m/0.3 kgf-m

- Position worm clips correctly and tighten screws **(M5) (a)** on LH and RH bellows **(b)** firmly such that clips do not rotate and bellows are tight on throttle body **(c)**.

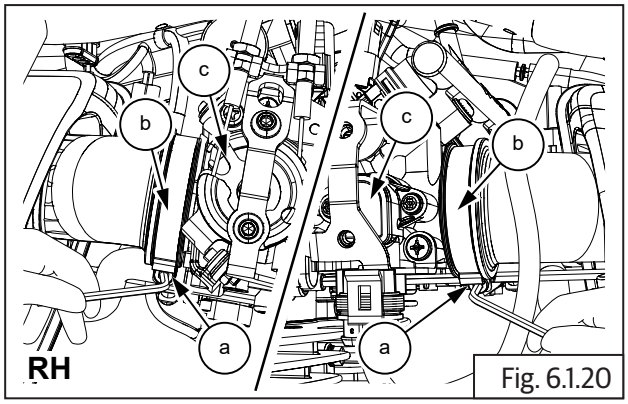

Fig. 6.1.20

	4 mm Allen key

- Position upper clamp **(a)** correctly against air filter box assembly on RH side, duly ensuring mounting holes are aligned. Ensure the brake hoses and EVAP hose are correctly located inside clamp.
- Locate screw **(b)** on mounting hole of clamp and tighten clamp to air filter housing.

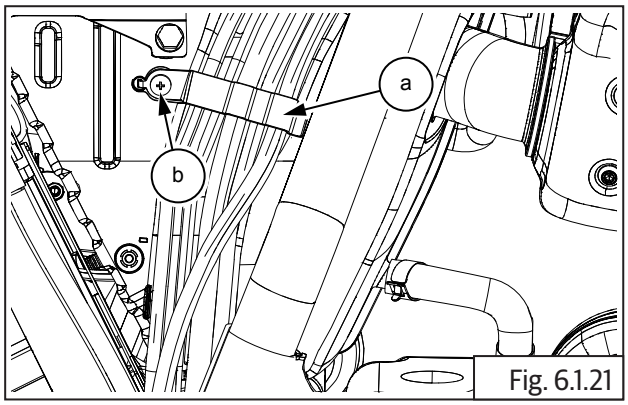

Fig. 6.1.21

	Screw driver (+)

- Position lower clamp **(a)** correctly against air filter box assembly on RH side, duly ensuring mounting holes are aligned. Ensure brake hoses and wiring harness are correctly located inside clamp.
- Locate screw **(b)** on mounting hole of clamp and tighten clamp to air filter housing.

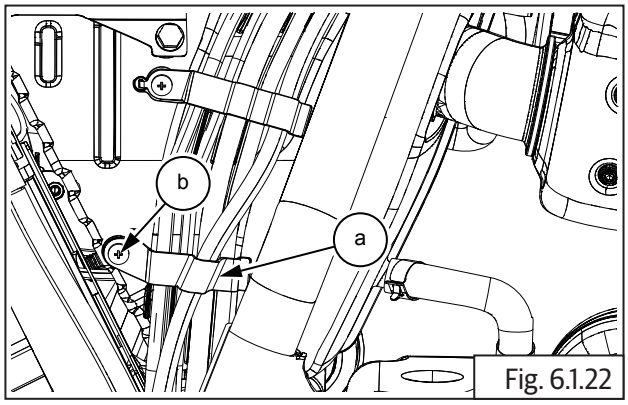

Fig. 6.1.22

	Screw driver (+)

- Connect idle air control (IAC) hose **(a)** from air filter box assembly into throttle body **(b)**.

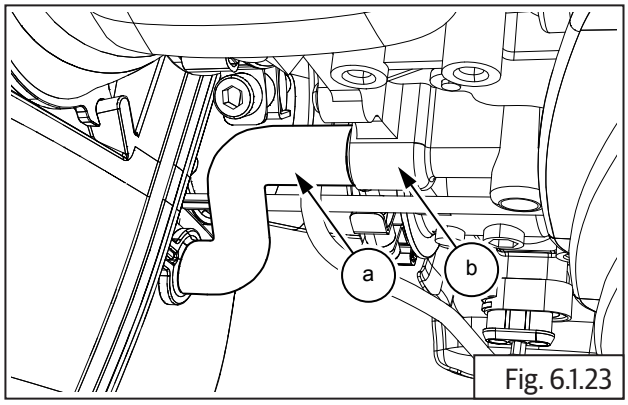

Fig. 6.1.23

- Ensure hose clip **(a)** is located on breather hose and connect breather hose to air filter box assembly **(b)**.

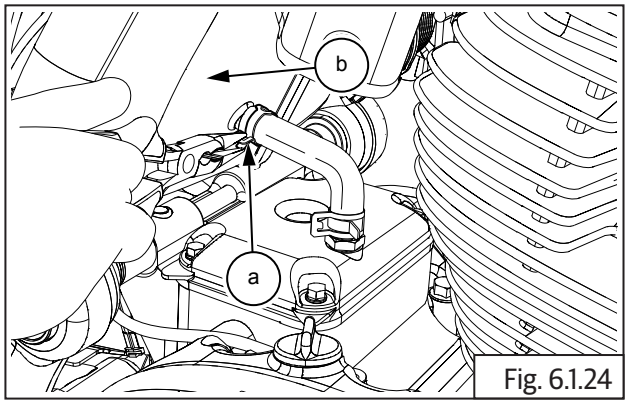

Fig. 6.1.24

	Nose plier

- Position air cut valve **(b)** into air filter box assembly top correctly and tighten with 2 Nos. Hex socket head bolts **(M5) (a)**.

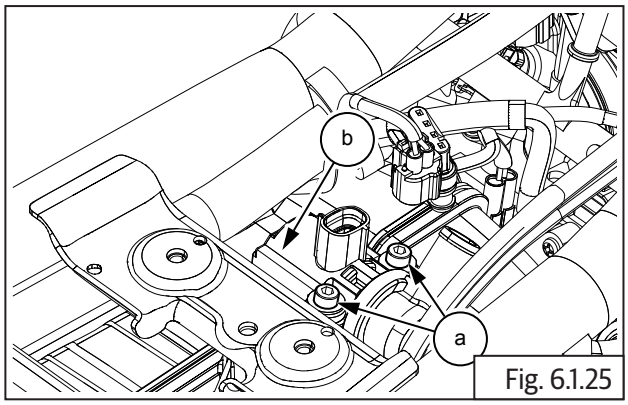

Fig. 6.1.25

	4 mm Allen Socket with Ratchet

- Connect hose **(a)**, secondary air to spout in air cut valve and ensure proper seating.
- Connect wiring coupler **(b)** to air cut valve.

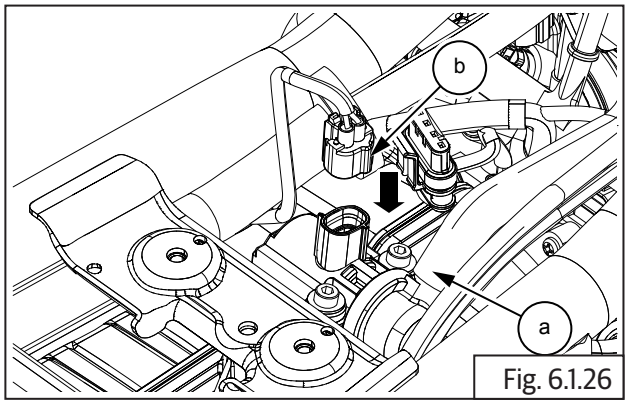

Fig. 6.1.26

- Position IAT sensor into air filter box assembly LH side correctly and tighten with 2 Nos. Hex socket head bolts **(M5) (a)**.

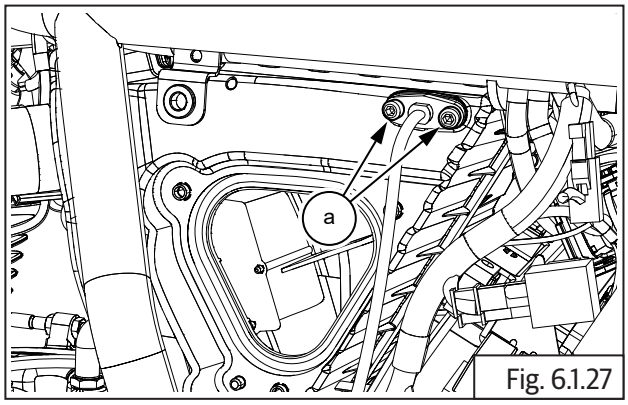

Fig. 6.1.27

	4 mm Allen key

- Connect wiring coupler to IAT sensor **(a)**.

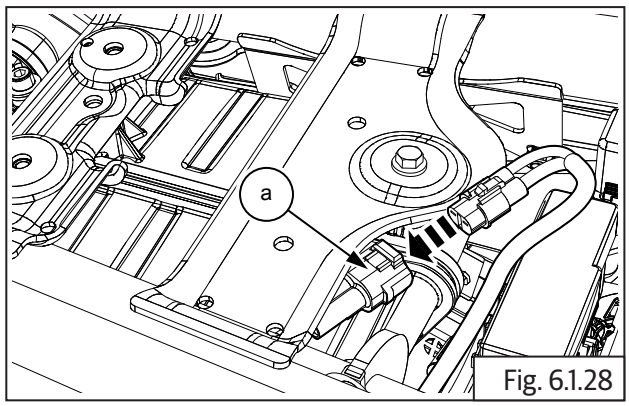

Fig. 6.1.28

- Assemble the following parts:
  - Assemble Battery tray and Battery (section 11.8.3).
  - Rear mudguard infill cover (section 6.6.10).
  - Rear wheel assembly (section 6.8.8).
  - Locate ECU (section 10.1.20) on frame and tighten with screws.

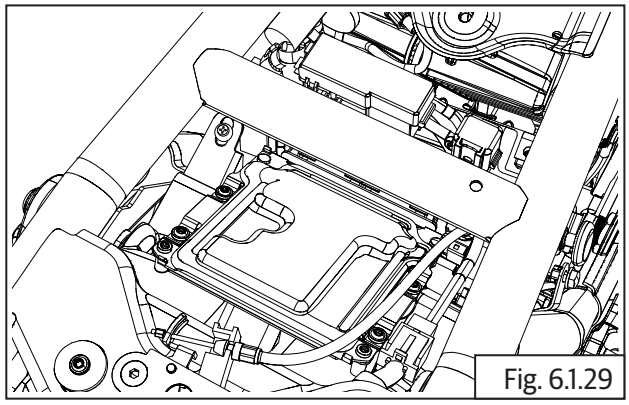
Fig. 6.1.29

  - Connect ECU wiring coupler from harness to ECU (section 10.1.20).
  - Connect the Battery terminals (section 11.8.4).
  - Locate utility box on frame RH and tighten in place (section 11.8.4).
  - Assemble fuel tank assembly (section 7.1.15).

⚠ WARNING

Gasoline is extremely flammable and highly explosive. Improper handling can lead to fatal accident or serious injury.

⚠ CAUTION

Ensure the following:

Wiring connectors to fuel pump and low fuel sensor are connected.

EVAP and drain hoses are connected.

Fuel feed and return hose are connected to fuel rail.

6.1.4 Air Filter Element

- The filter element **(a)** has one end open and the other end closed. Insert closed end of filter element into air filter box assembly correctly such that open end is facing outside.

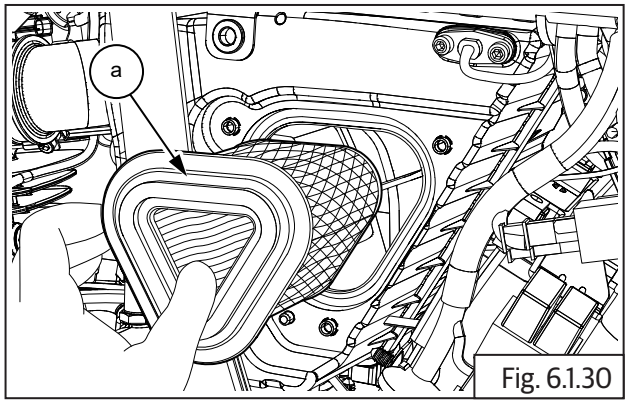

Fig. 6.1.30

- Locate element cover **(a)** on air filter box assembly duly ensuring the locating hole **(b)** in cover is aligned to peg **(c)** in air filter box assembly.

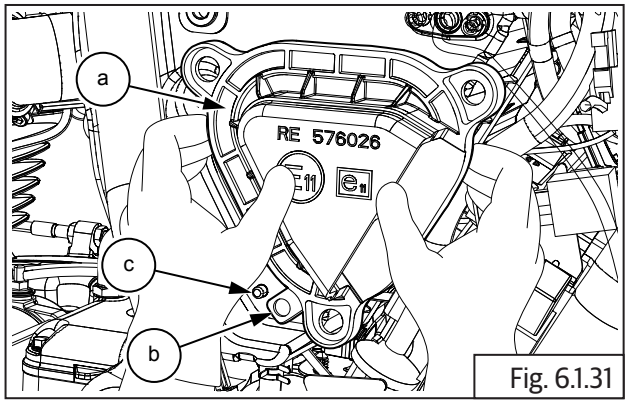

Fig. 6.1.31

- Ensure proper seating of cover and tighten cover to air filter box assembly evenly and firmly with 3 Nos. Pan head screws **(a)**.

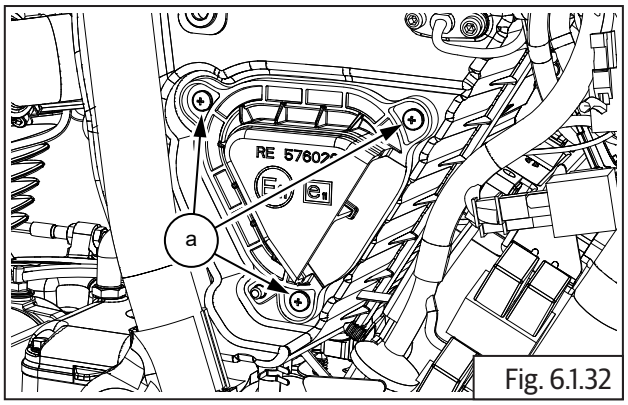

Fig. 6.1.32

	Phillips screw driver

⚠ CAUTION

Do not over tighten the screws or use excessive force as it will damage the cover and the air filter box assembly.

- Assemble side panel LH (section 6.7.5).
- Assemble rider seat (section 6.7.7).
- Assemble side panel RH (section 6.7.8).

Troubleshooting

Symptom	Possible Cause	Diagnosis	How to Fix	Recommended Specification
Air induction noise from air filter box is high	Air filter element cover not sealing properly on air filter box assembly	Air filter element cover not seated properly on air filter box assembly/improperly tightened	Check proper seating of the air filter element cover on air filter box assembly	
	Air filter element cover cracked	Air filter element cover cracked due to improper assembly/over tightened	Replace air filter Element cover assembly	
	Air filter box assembly cracked/damaged	Air filter box assembly not aligned properly and tightened/damaged due to stone hit	Replace air filter box assembly	
	Hoses connecting to inlet manifold cracked	Cracked due to age hardening/improper assembly	Replace air filter box assembly	
Engine running very sluggish and pick up poor	Filter element choked	Filter element choked with dirt/water/oil	Check and replace filter element	
Engine misfiring/ running lean/idling improper	Rubber hoses connecting from air filter box assembly to ACV, IAC, throttle body, cracked/disconnected/ not sealing properly	Check and inspect each hose for no damage/cracks/ proper fitting	Check and replace hose/s, and/or air filter body as required	
	Filter element damaged	Damaged due to mishandling/heavy particles entering air filter box assembly	Check and replace filter element	
	IAT sensor not sealing properly	IAT sensor sealing gasket damaged/mounting screws loose	Check and replace IAT sensor gasket/sensor	
	ACV not sealing properly	ACV sealing gasket damaged/mounting screws loose	Check and replace ACV gasket/sensor	
Engine oil accumulation inside air filter box assembly	Excessive oil in sump	Check and maintain correct engine oil level	Clean breather chamber and hose leading to air filter box assembly	

NOTE

- *The trouble shooting given in this section is only related to issues with air filter. For complaints like sluggish running/misfiring improper idling etc., it will also be necessary to check the other aspects such as fuel, ignition, EMS, battery conditions etc., and correct.*

CONTROL CABLES

CONTENTS PAGE

6.2 Control Cables 357

Dismantling 358

6.2.1. Clutch Cable 358

6.2.2. Throttle Cable 360

Inspection 362

Assembly 363

6.2.3. Throttle Cable 363

6.2.4. Throttle Cables Free Play Adjustment 365

6.2.5. Clutch Cable 366

Troubleshooting 368

6.2 Control Cables

Clutch Cable

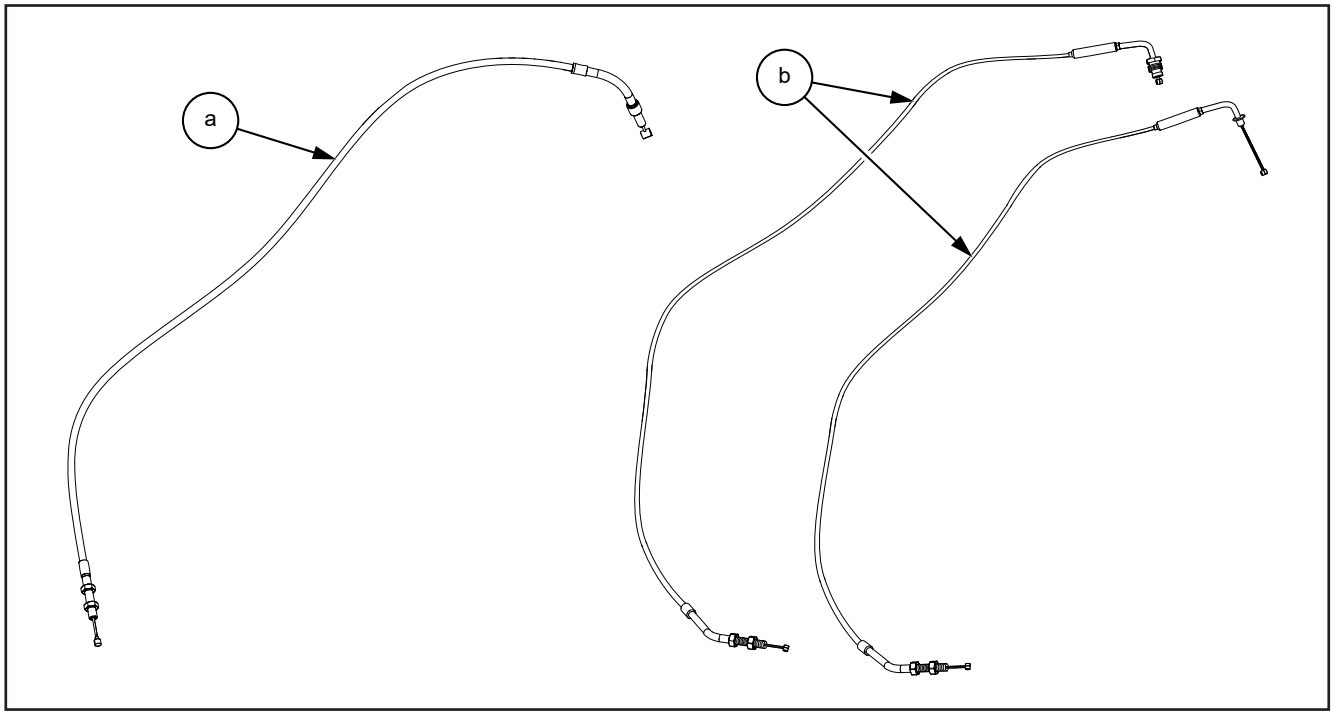

Item No.	Description	Quantity
a	Clutch Cable	1
b	Throttle cable assembly forward and return	1

Dismantling

6.2.1. Clutch Cable

Cover RH End

⚠ CAUTION

Ensure the motorcycle is upright on a firm and flat surface.

- Ensure ignition switch and engine stop switch are in OFF position.
- Gently compress and release 2 clips **(a)** holding clutch cable to frame near exhaust pipe RH.

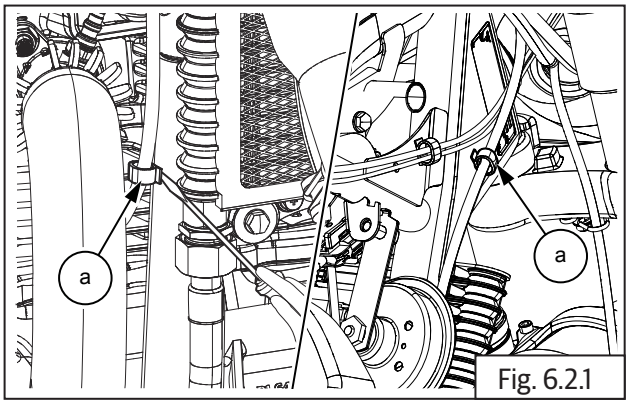

Fig. 6.2.1

- Loosen lock nut and ensure adjuster **(a)** at the handlebar end is fully turned into the bracket LH to increase cable play.

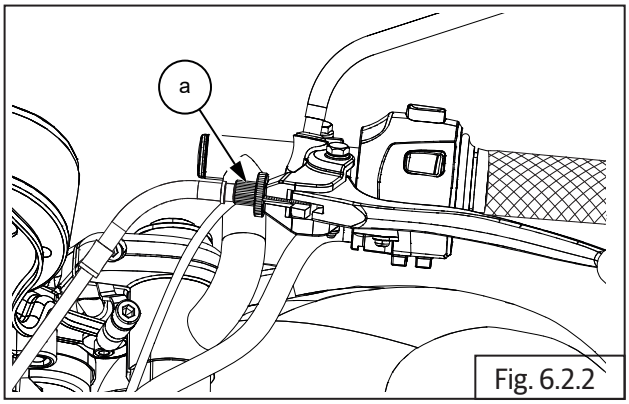

Fig. 6.2.2

- Loosen outer locknut **(M8) (a)** completely on the clutch cable adjuster at RH cover end and push clutch cable **(b)** into cable guide in cover RH to increase the free play of the inner cable.

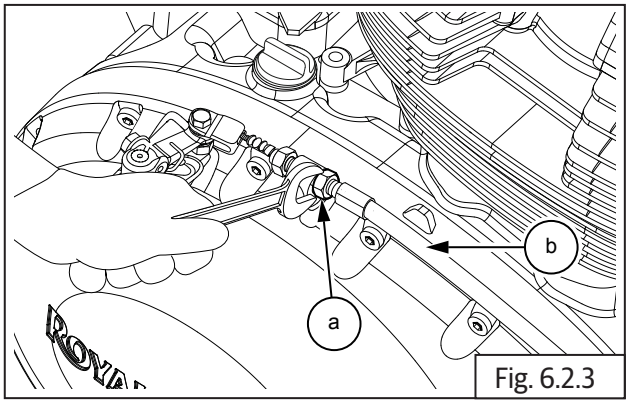

Fig. 6.2.3

	12 mm Double end spanner

- Gently push inner cable **(a)** into clevis **(b)** in clutch shaft **(c)** and remove cable through the slot in the clevis.

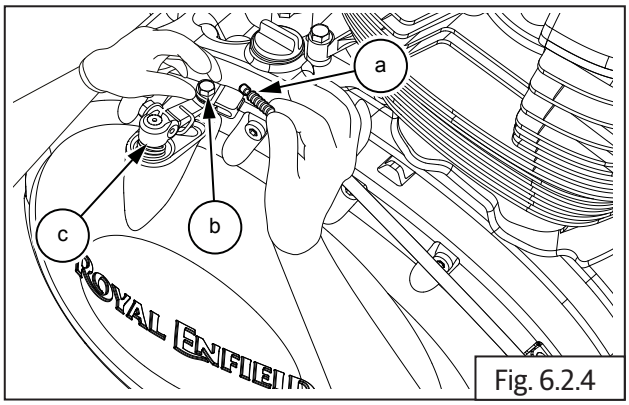

Fig. 6.2.4

- Remove protective rubber boot **(a)** from clutch cable **(b)**.

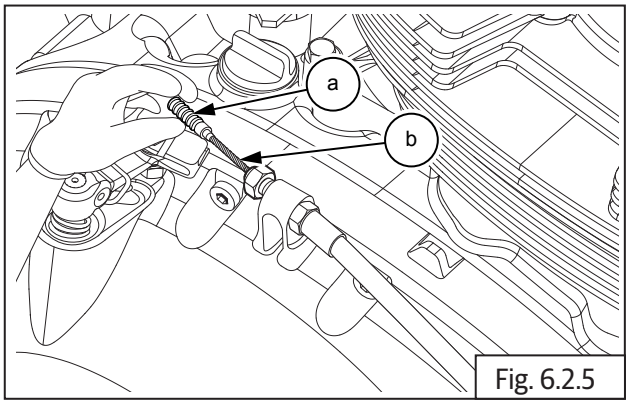

Fig. 6.2.5

- Loosen adjuster nut **(a)** completely from the clutch cable and remove.

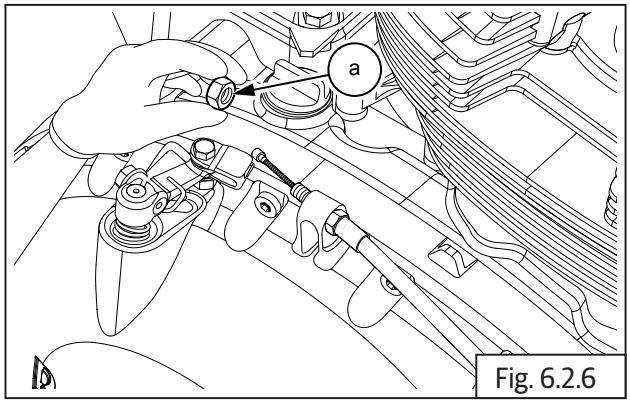

Fig. 6.2.6

- Gently pull out clutch cable assembly **(a)** from the cable guide **(b)** in cover RH assembly.

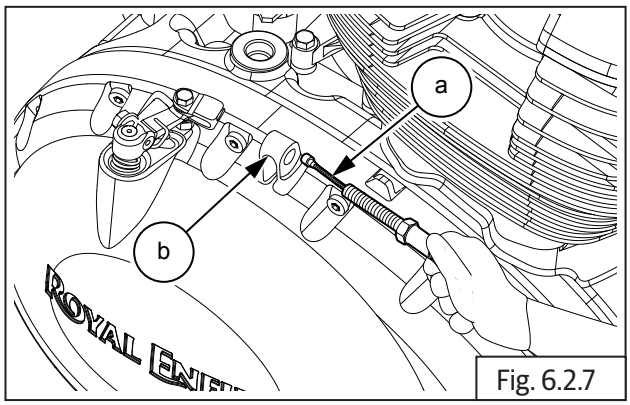

Fig. 6.2.7

Handlebar End

- Ensure the slot in the adjuster **(a)** and locknut are aligned with the slot in the clutch bracket **(b)**.

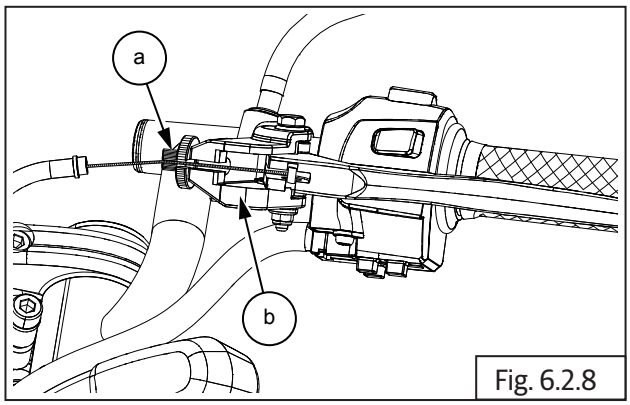

Fig. 6.2.8

- Gently pull out the outer cable **(a)** from the adjuster. Rotate and align adjuster with slot in clutch bracket and release inner cable **(b)** from lever eyelet.

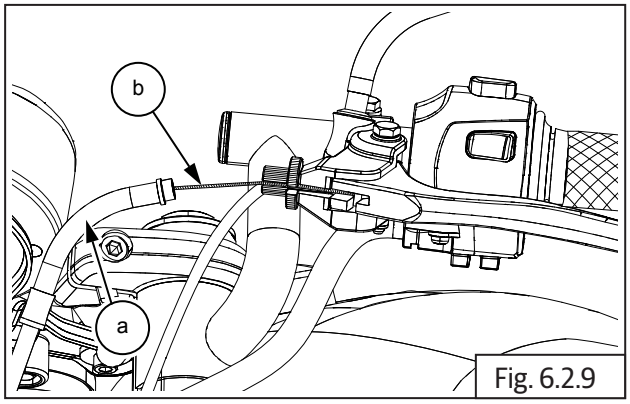

Fig. 6.2.9

- Remove clutch cable from motorcycle.

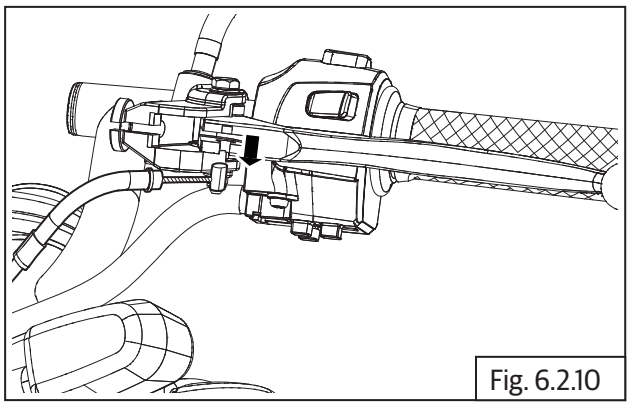
Fig. 6.2.10

NOTE
• *Please ensure the securing clips holding clutch cable to frame are released before attempting to remove clutch cable from motorcycle.*

6.2.2. Throttle Cable

Throttle Body End

⚠ CAUTION

Ensure the motorcycle is upright on a firm and flat surface.

- Ensure Ignition switch and Engine stop switch are in OFF position.
- Remove side panel RH (Section 6.7.1).
- Remove rider seat (Section 6.7.2).
- Loosen fuel tank assembly mountings (Section 7.1.1) and carefully slide and lift fuel tank up to access 2 clips holding the throttle cables to frame on RH side.
- Gently compress and release the clip **(a)** holding throttle cable to frame on the RH side.

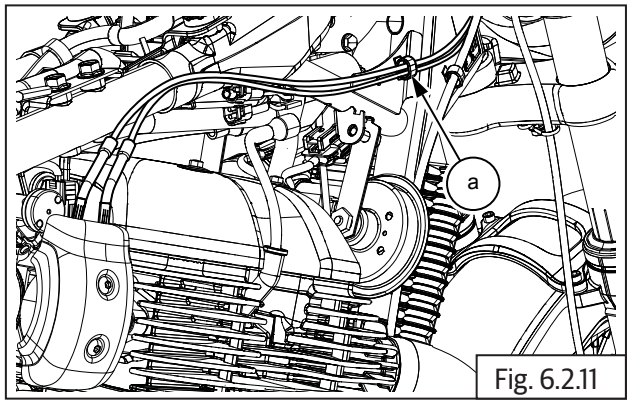

Fig. 6.2.11

- Loosen and remove 2 Nos. Hex socket screws **(M5) (a)** on throttle body cover RH **(b)** and remove cover.

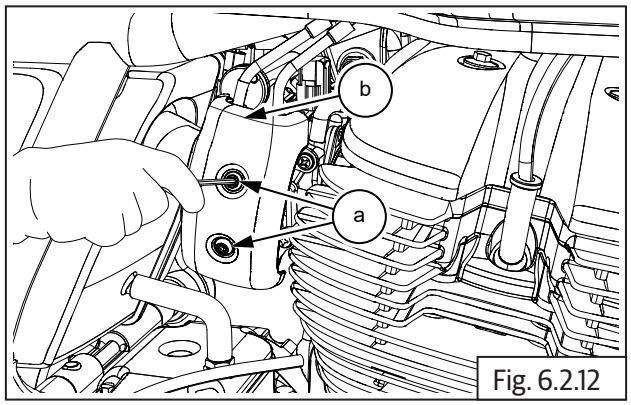

Fig. 6.2.12

	4 mm Allen key

- Loosen 2 Nos. Hex nuts **(M6) (a)** fully on top of throttle cable bracket **(b)** to increase inner cable **(c)** free play.

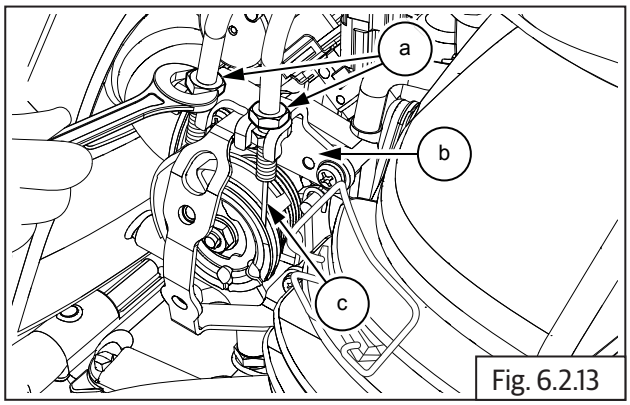

Fig. 6.2.13

	10 mm Double end spanner

- Push cable adjusters fully into the bracket and loosen the 2 inner hex nuts **(M6)** on the throttle cable adjusters.
- Ensure both inner nuts are free from the adjusters and gently pull out the adjuster of the inside cable till it is out of the bracket and slide the inner cable out through the slot in the bracket.
- Repeat above process for the other throttle cable.
- Rotate inner cable **(a)** till it is aligned with the slot in the rotor **(b)** on throttle body and remove cable from the eyelet.
- Repeat above process for removing the other throttle cable.
- Remove the cables from the bracket on throttle body.

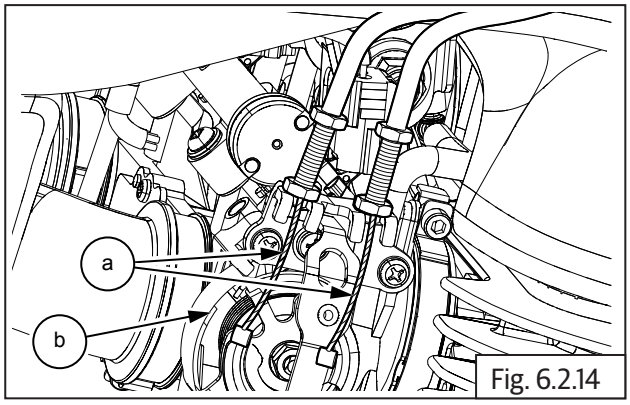

Fig. 6.2.14

Handlebar End

- Loosen screw **(a)** on the front cable and rotate the clip **(b)** holding throttle cable to throttle rotor housing.

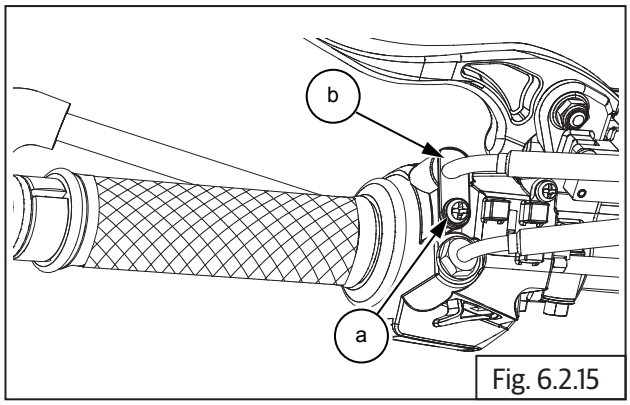

Fig. 6.2.15

	Phillips screw driver

- Loosen the hex nut **(M8) (a)** holding rear cable to throttle rotor housing.

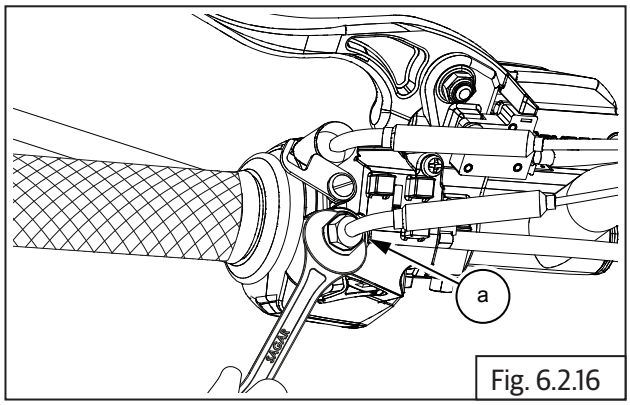

Fig. 6.2.16

	14 mm Double end spanner

- Loosen and remove 2 Nos. Phillips head screws **(a)** from the bottom of the throttle rotor housing and separate the halves.

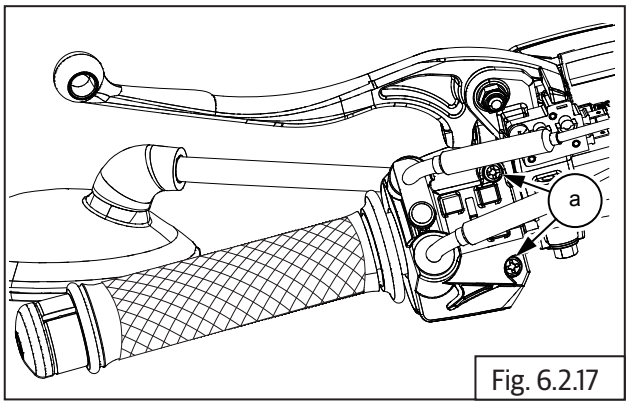

Fig. 6.2.17

	Phillips screw driver

- Gently pull up the inner cable **(a)** from the slot in the throttle rotor **(b)**, rotate and ensure it is aligned to the slot in the throttle rotor grip and remove.

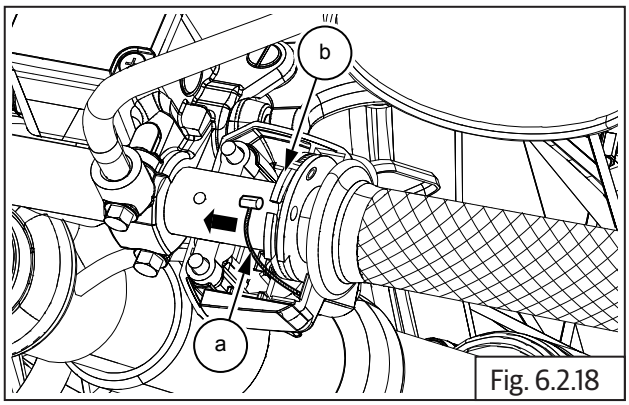

Fig. 6.2.18

- Repeat the above process to remove the other inner cable **(a)**.

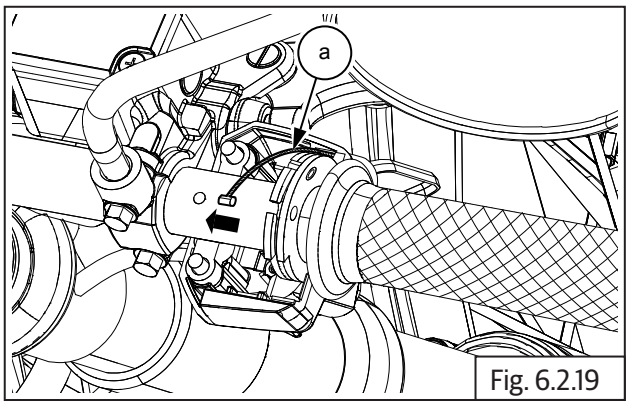

Fig. 6.2.19

- Gently remove the cables from the rotor housing bottom.
- Remove the twin cables from the motorcycle.
- Remove throttle rotor (section 6.3.1).

Inspection

Cables

- Clean and inspect inner cables top and bottom ends for frayed and/or broken strands.

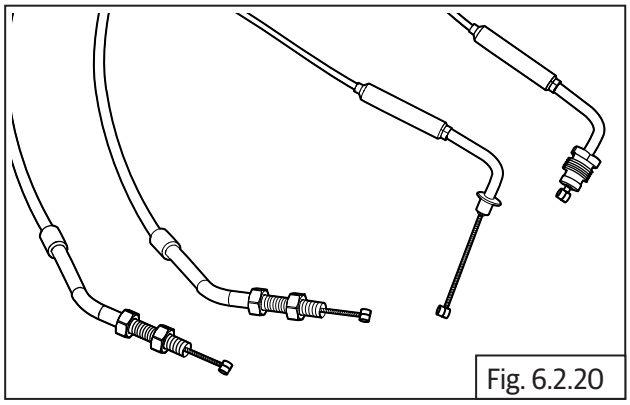

Fig. 6.2.20

- Clean and inspect outer cables for brittleness, damages and/or cracks.

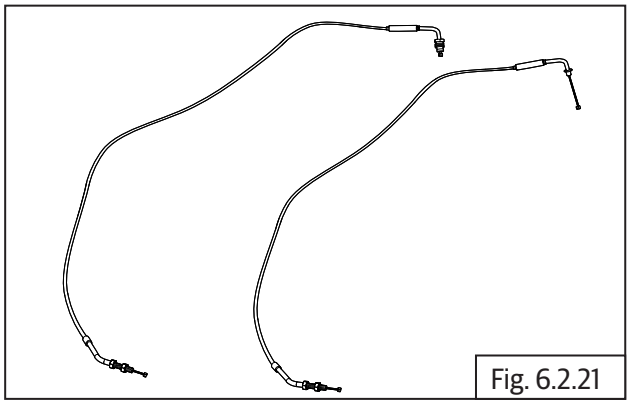

Fig. 6.2.21

- Inspect the cable adjuster threads and hex nuts for any wear out and/or damage.
- Check free movement of the inner cables in the outer cables and no stickiness.
- Replace control cables as per the recommendations in the maintenance chart.

⚠ CAUTION

DO NOT wash control cables, especially inner cables, using any solvents since it will damage the protective layer inside the control cables.

Do not lubricate inner cable by spraying any lubricants into the outer cable.

Do not roll the cables into a tight wind for storing after removal. Store them as straight as possible to avoid damage to the inner layer/ cable.

Use a soft cloth with a mild cleaning agent if necessary, to wipe off the dirt, grease or grime on the outer cables.

Clutch Lever Bracket Adjusting Screw And Clutch Lever

- Inspect the cable seating area in the adjuster on clutch lever bracket for any damages/cracks.
- Inspect the threads of the adjuster and the clutch lever bracket for any damages, threads wear out.

Throttle Rotor, Grip and Housing on Handlebar RH

- Inspect throttle rotor grip for any damages and/or cracks.
- Inspect throttle rotor for any damages/wear out.
- Inspect cable seating eyelets in the throttle rotor for any damages, fraying etc.
- Inspect the throttle rotor movement slots in the top and bottom housing for any damages/wear out.

Assembly

6.2.3. Throttle Cable

- Route both the cables between the top yoke and frame head tube on the RH side under fuel tank.

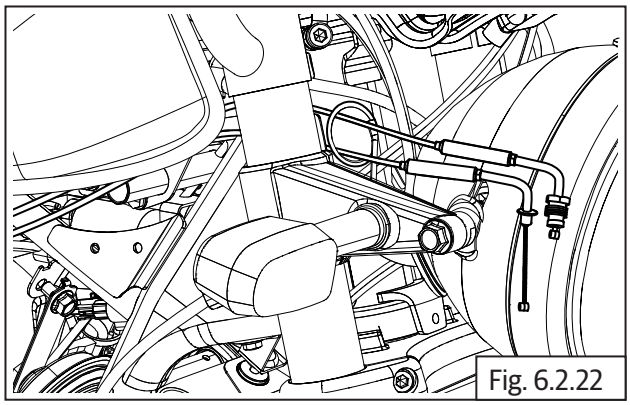
Fig. 6.2.22

- Locate cable holding clips **(a)** on throttle cables and lock into the frame.

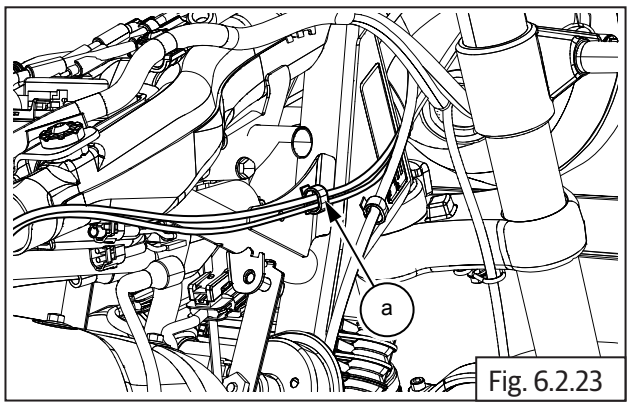

Fig. 6.2.23

Handlebar End

- Lubricate throttle rotor grip inside with general purpose grease and assemble on handlebar RH.
- Ensure the cable slots on the rotor are facing above for correct and ease of assembly of inner cables.

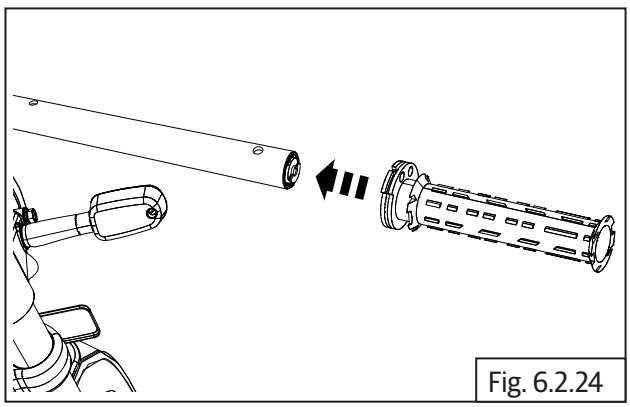
Fig. 6.2.24

- Ensure the adjusters on both cables are set at their center for finer adjustments later.
- Insert throttle cable **(a)** with hex nut **(b)** into the **rear** hole of the throttle rotor housing and locate inner cable in the rear eyelet on the throttle rotor.
- Align inner cable to the slot in the rotor, rotate and ensure proper routing of the inner cable in the slot in throttle rotor.

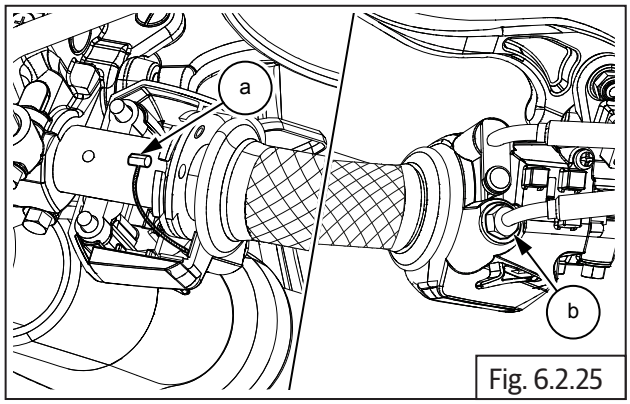

Fig. 6.2.25

- Insert the other throttle cable **(a)** and clip **(b)** into the **front** hole in throttle rotor housing and locate inner cable in front eyelet on throttle rotor.
- Align inner cable to slot in the rotor, rotate and ensure proper routing of the inner cable in the slot in throttle rotor.

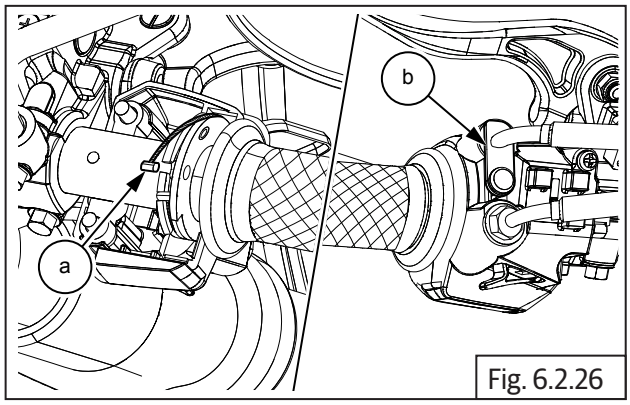

Fig. 6.2.26

- Locate and hold bottom housing against handlebar such that the throttle rotor is correctly seated in the groove in the bottom housing.
- Rotate throttle rotor clockwise, till it is resting on the bottom housing.
- Locate the top housing on the handlebar above the rotor, duly ensuring the following:
  - Throttle rotor is correctly seated in the groove in the top housing.

- The locking peg in the top housing is located correctly into the hole in the handlebar.
- The seating faces of the housing are matched correctly.

- Support top and bottom housings, check for free movement of the throttle rotor by gently rotating the throttle rotor grip.
- Insert long Phillips head screw **(a)** into the front mounting hole in bottom housing and tighten just sufficiently.

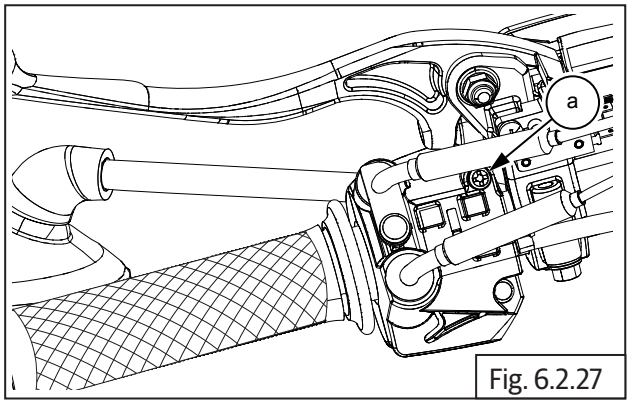

Fig. 6.2.27

	Phillips screw driver

- Insert short Phillips head screw **(a)** into rear mounting hole in bottom housing and tighten just sufficiently.

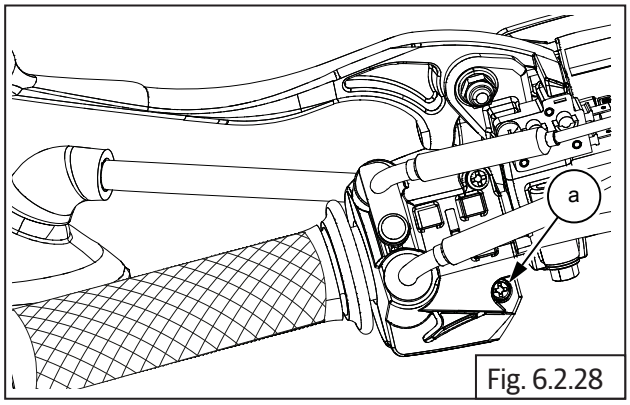

Fig. 6.2.28

	Phillips screw driver

- Check and ensure rotor housing is locked properly in handlebar and free movement of throttle rotor and tighten both screws **(a)** evenly till the housing is tight on the handlebar.

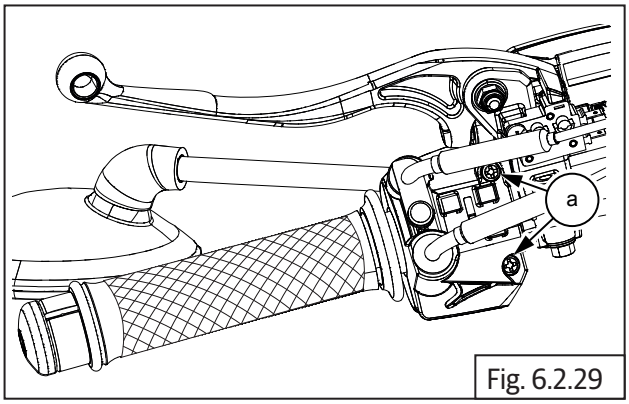

Fig. 6.2.29

	Phillips screw driver

- Locate Hex nut **(M8) (a)** of the rear cable into bottom housing and tighten.

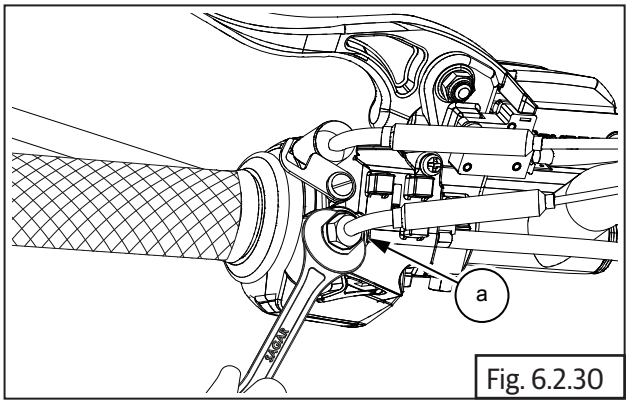

Fig. 6.2.30

	14 mm Double end spanner

- Rotate clip **(a)** such that the groove is duly positioned on the cable and tighten locking screw **(b)**.

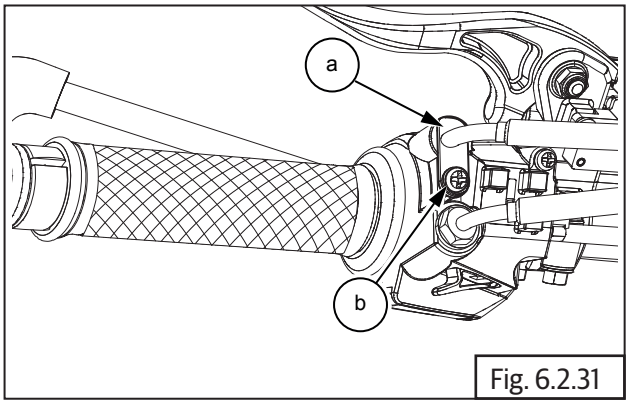

Fig. 6.2.31

	Phillips screw driver

Throttle Body End

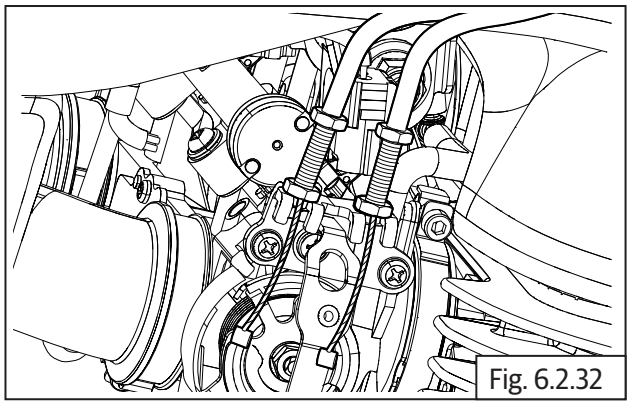
Fig. 6.2.32

- Gently open throttle at handlebar end and identify the cable in which the inner cable retracts.
- Insert this cable into the front slot in the bracket in the throttle body and ensure the adjuster is fully into the bracket on throttle body.
- Assemble lock nut on the inner cable.
- Position inner cable **(a)** to the front slot of the rotor on throttle body, insert inner cable into the eyelet and route the cable in the groove in the rotor of the throttle body.

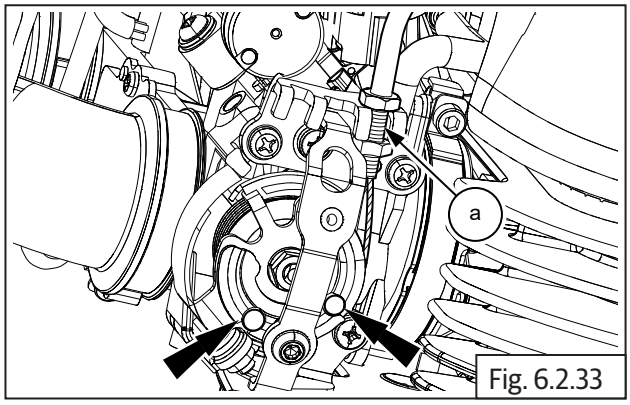

Fig. 6.2.33

- Repeat above steps to locate the other cable in the rear slot of the rotor on throttle body.

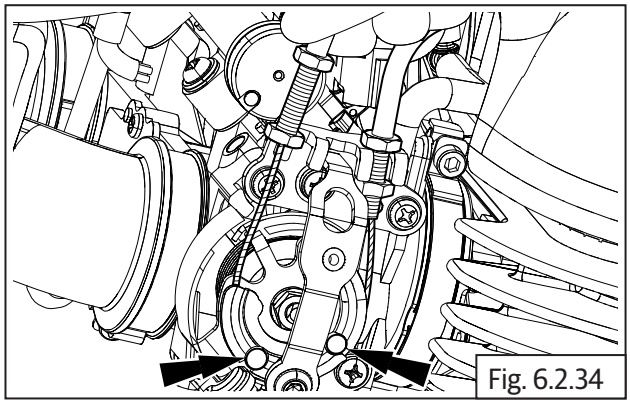
Fig. 6.2.34

- Ensure both inner cables are seated properly in the eyelets at throttle body end and handlebar end. Gently rotate throttle rotor at handlebar and ensure they are operating properly.

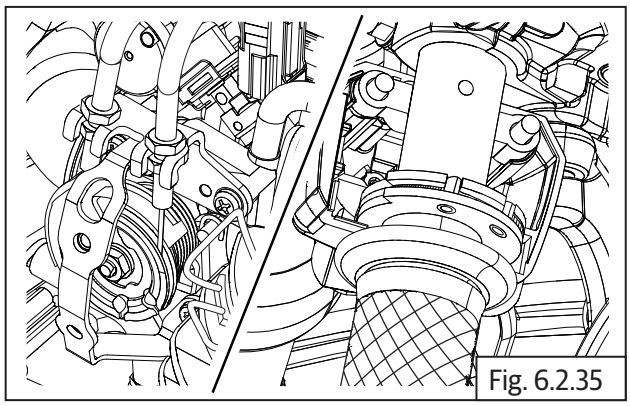
Fig. 6.2.35

6.2.4. Throttle Cables Free Play Adjustment

- Gently pull adjusters out of the bracket on throttle body end till the inner cables have **NO SLACK**.
- Tighten the outside nuts on the adjusters till they are resting against the bracket on throttle body.
- Hold handlebar straight and check for free rotation of **3 to 4 mm**. (The rotor on the throttle body should not rotate).

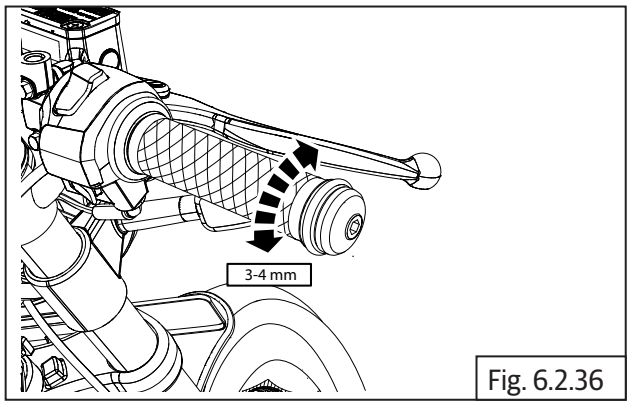

Fig. 6.2.36

- Loosen/Tighten the outer nuts to achieve the correct free play.
- Check both cables are correctly positioned and clamped to the frame, turn handlebar to both left and right sides to ensure the free play is maintained.
- Tighten inner lock nuts on the adjusters till they are firmly locked on the inside of the bracket.

NOTE
• *To carry out finer adjustments to maintain the free play, turn the adjusters on the cables at the handlebar end, in or out.*

- Locate throttle body cover RH **(a)** against the bracket and ensure holes are aligned and tighten with 2 Nos. Hex socket screws **(M5) (b)**.

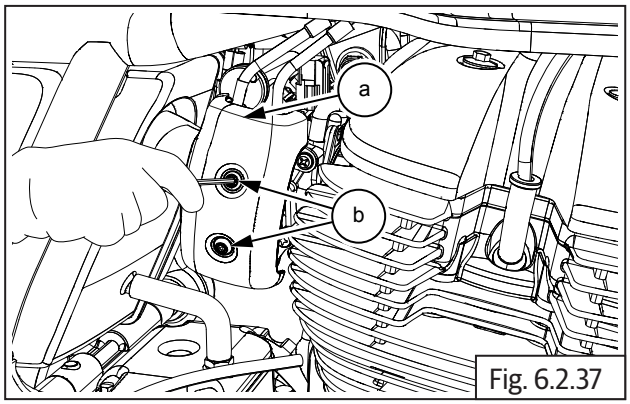

Fig. 6.2.37

	4 mm Allen key

- Assemble fuel tank assembly (section 7.1.15).

6.2.5. Clutch Cable

Handlebar End

- Ensure adjuster on lever bracket LH is in midway position and the slot in the adjuster is correctly aligned to the slot in the lever bracket LH.

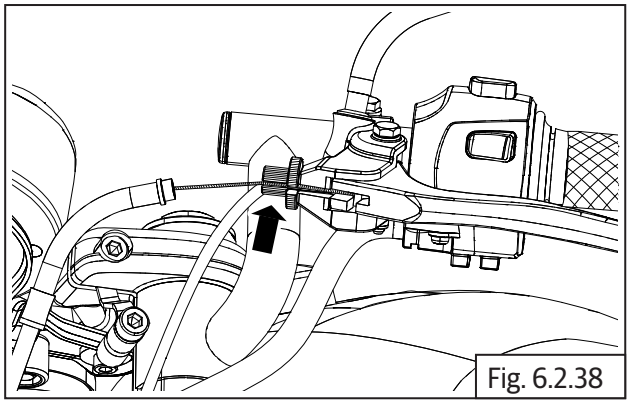
Fig. 6.2.38

- Locate inner cable into the eyelet on clutch lever and ensure it is aligned.
- Route inner cable into the slot in the clutch bracket and adjuster and lock the outer cable into adjuster.

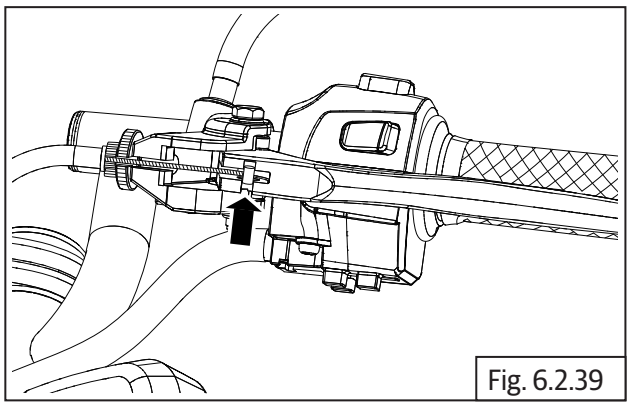
Fig. 6.2.39

- Route clutch cable between headlamp holder LH and frame towards the RH side.
- Locate 2 holding clips on the clutch cable and frame near RH exhaust pipe.

Clutch cover End

- Insert inner cable into the cable guide **(b)** in clutch cover assembly and ensure the adjuster **(a)** is fully inside the guide in clutch cover assembly.

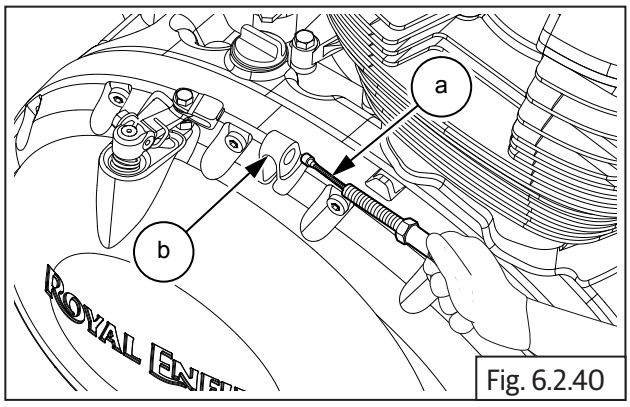

Fig. 6.2.40

- Assemble adjuster nut **(a)** on the adjuster and tighten by a few threads.

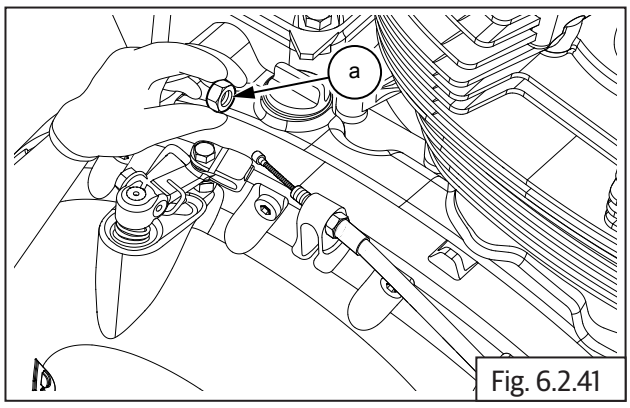

Fig. 6.2.41

- Assemble protective rubber boot **(a)** on clutch cable inner **(b)**.

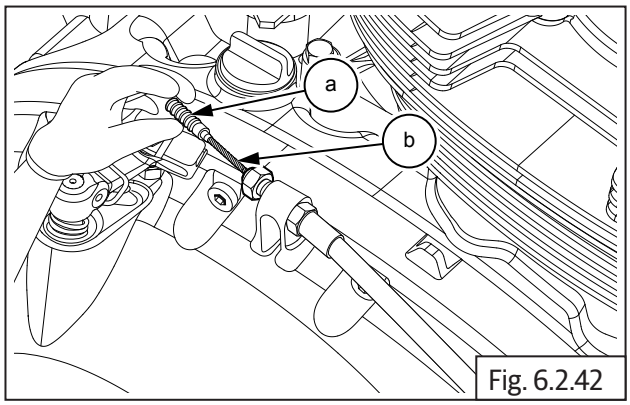

Fig. 6.2.42

- Gently locate inner cable **(a)** into clevis **(b)** in clutch lever **(c)**.

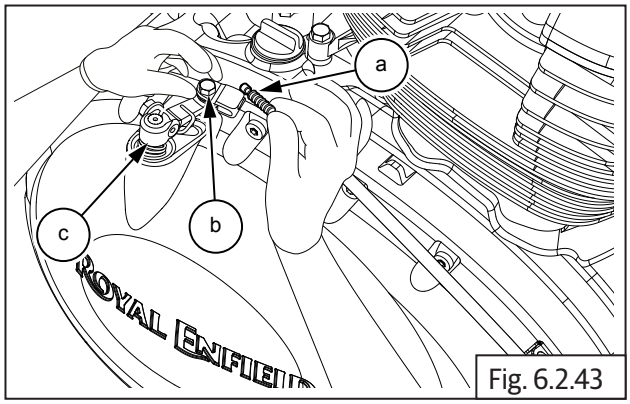

Fig. 6.2.43

Clutch Cable Free Play Adjustment

- Gently pull clutch cable adjuster **(a)** out of the clutch cover till the inner cable has **NO SLACK** and tighten the outer lock nut **(b)** against the guide in clutch cover.

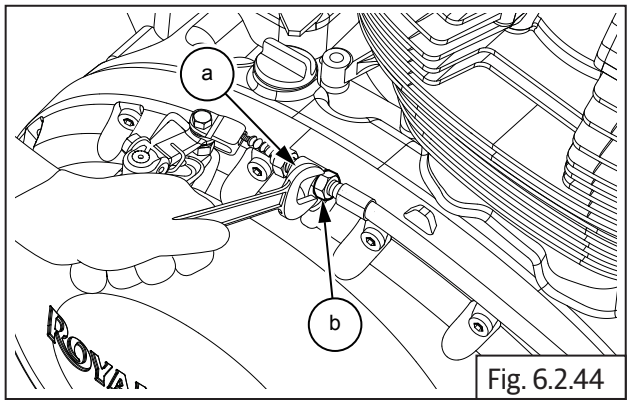

Fig. 6.2.44

	12 mm Double end spanner

- Hold handlebar straight and check clutch lever free play of 2 to 3 mm (The lever on clutch cover should not move).

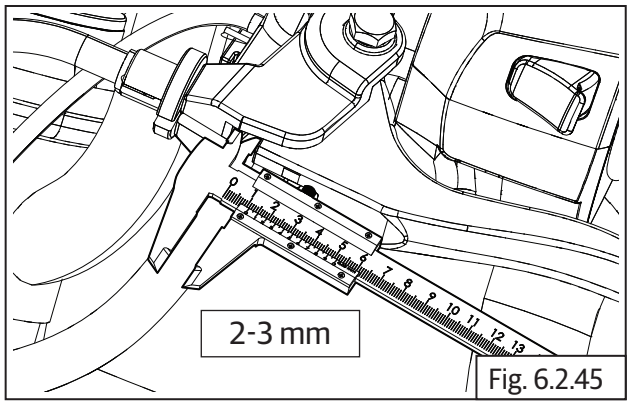

Fig. 6.2.45

- Loosen/Tighten outer nut at clutch cover end to achieve the correct free play.
- Check for proper clamping of clutch cable to frame, turn handlebar to both left and right sides to ensure the free play is maintained.
- Tighten inner lock nut on the adjuster till it is firmly locked against the cable guide on cover RH.

NOTE
• *To carry out finer adjustments to maintain the free play, turn the adjuster on the lever bracket LH at the handlebar end, in or out.*

Troubleshooting

Symptom	Possible Cause	Diagnosis	How to Fix	Recommended Specification
Clutch lever movement not smooth	Clutch lever operation at handlebar end is sticky	Clutch lever, bracket and pivot screw at handlebar end is dry without lubrication/excessive dirt accumulation	Clean and lubricate clutch lever, bracket and pivot screw at handlebar end	
	Clutch lever excessive movement in handlebar bracket LH	Clutch lever mounting hole is out of shape/fixing bolt worn-out	Check and replace clutch lever bracket assembly	
	Inner cable movement sticky in outer cable	Inner cable strands broken and jammed inside outer cable/clutch lever bracket	Check and replace clutch cable	
		Teflon tube inside outer cable torn/damaged	Check and replace clutch cable	
	Clutch shaft movement sticky in cover RH	Poor/no lubrication of the clutch shaft in cover RH/ uneven wear-out of clutch shaft/cover RH	Check and replace clutch shaft/cover RH	
	Clutch plates movement in clutch housing is sticky	Clutch plates/clutch housing damaged	Check and replace clutch plates/clutch assembly	
Clutch operation hard	Clutch lever movement in bracket hard	Clutch lever, bracket and pivot screw at handlebar end is dry without lubrication/excessive dirt accumulation	Clean and lubricate clutch lever, bracket and pivot screw at handlebar end	
	Inner cable movement sticky in outer cable	Inner cable strands broken and jammed inside outer cable/clutch lever bracket	Check and replace clutch cable	
		Teflon tube inside outer cable torn/damaged	Check and replace clutch cable	
	Clutch shaft movement hard in cover RH	Poor/no lubrication of the clutch shaft in cover RH/ uneven wear-out of clutch shaft/cover RH	Check and replace clutch shaft/cover RH	
	Clutch plates burnt and hard	Clutch plates burnt/hard/ clutch housing damaged	Check and replace clutch plates/clutch assembly	

Symptom	Possible Cause	Diagnosis	How to Fix	Recommended Specification
Throttle rotor movement sticky/ opening hard	Throttle cables are stuck between frame and fuel tank	Throttle cables stuck/ jammed between frame and fuel tank	Check cable routing and proper strapping to frame	
	Throttle rotor movement in housing is sticky	Throttle rotor area in the housing is dry/heavy dirt accumulation	Check and lubricate throttle rotor and housing in handlebar	
	Throttle rotor cable seating area damaged	The eyelets in the throttle rotor are damaged/inner cable eyelets not seating correctly in the rotor eyelets	Check and replace throttle cables/throttle rotor	
	Inner cables movement sticky in outer cable	Throttle cables inner strands broken	Check and replace throttle cables	
		Teflon coating in between inner/outer throttle cables damaged		

HANDLEBAR

CONTENTS PAGE

6.3 Handlebar 374

Dismantling 374

6.3.1.Aggregates of Handlebar 374

6.3.2. Handlebar - Interceptor 376

6.3.3. Top Yoke - Continental GT 378

6.3.4. Handlebar LH and RH - Continental GT 379

Inspection 379

Assembly 379

6.3.5. Handlebar LH and RH - Continental GT 379

6.3.6. Top Yoke 379

6.3.7. Handlebar - Interceptor 380

6.3.8. Aggregates of Handlebar - Continental / Interceptor 382

Troubleshooting 386

Handlebar - Continental GT

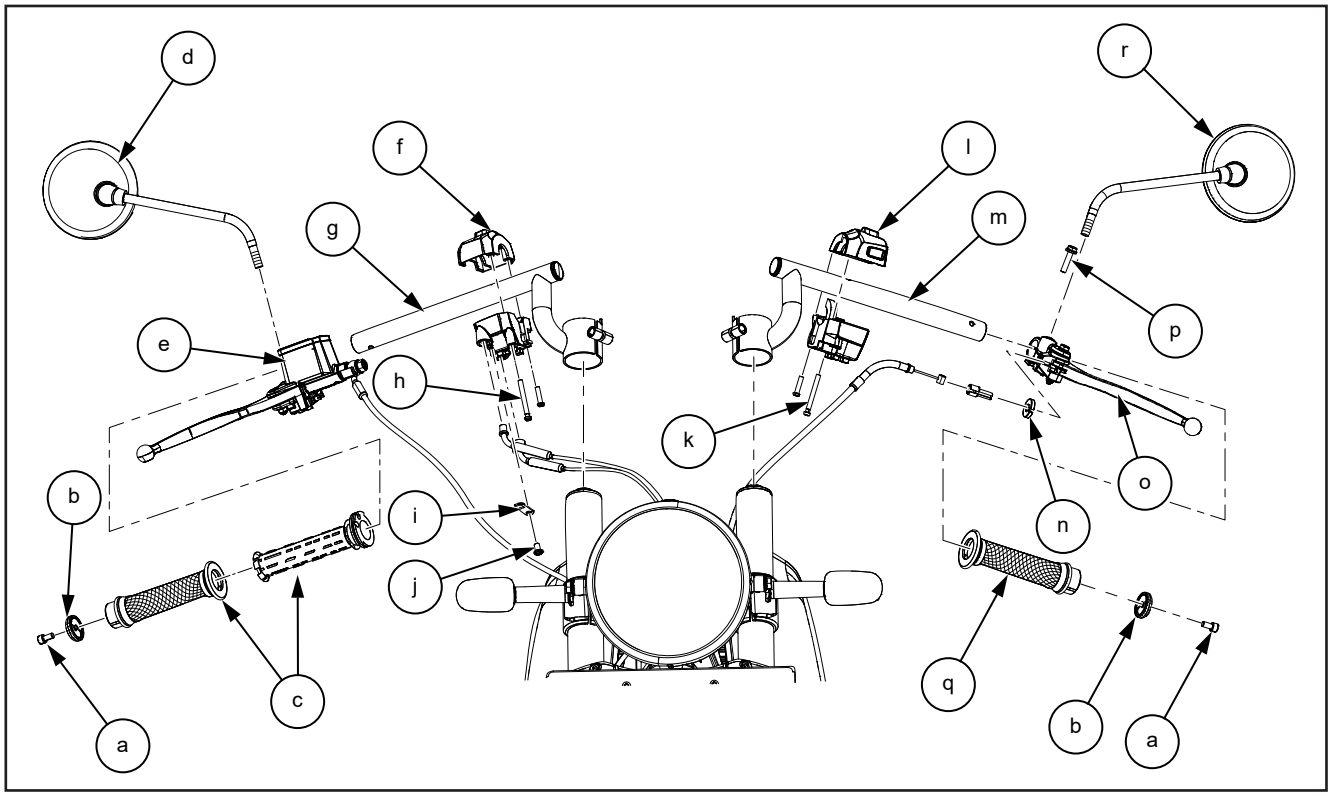

Item No.	Description	Quantity
a	Balancer Screw	2
b	Balancer	2
c	Grip and Throttle Rotor, RH	2
d	Mirror, Rear view, RH	1
e	Reservoir, Front Brake	1
f	Switch Module RH	1
g	Clip-on, Fabricated, RH	1
h	Screw, Switch Module	1
i	Clamp, Throttle Cable	2
j	Screw	1
k	Screw Switch Module LH	1
l	Switch Module LH	1
m	Clip-on, Fabricated, LH	1
n	Clutch Cable Adjuster	1
o	Clutch Lever with Bracket	1
p	Hex Head Flange Bolt M10	1
q	Grip LH	1
r	Mirror, Rear View, LH	1

Handlebar - Interceptor

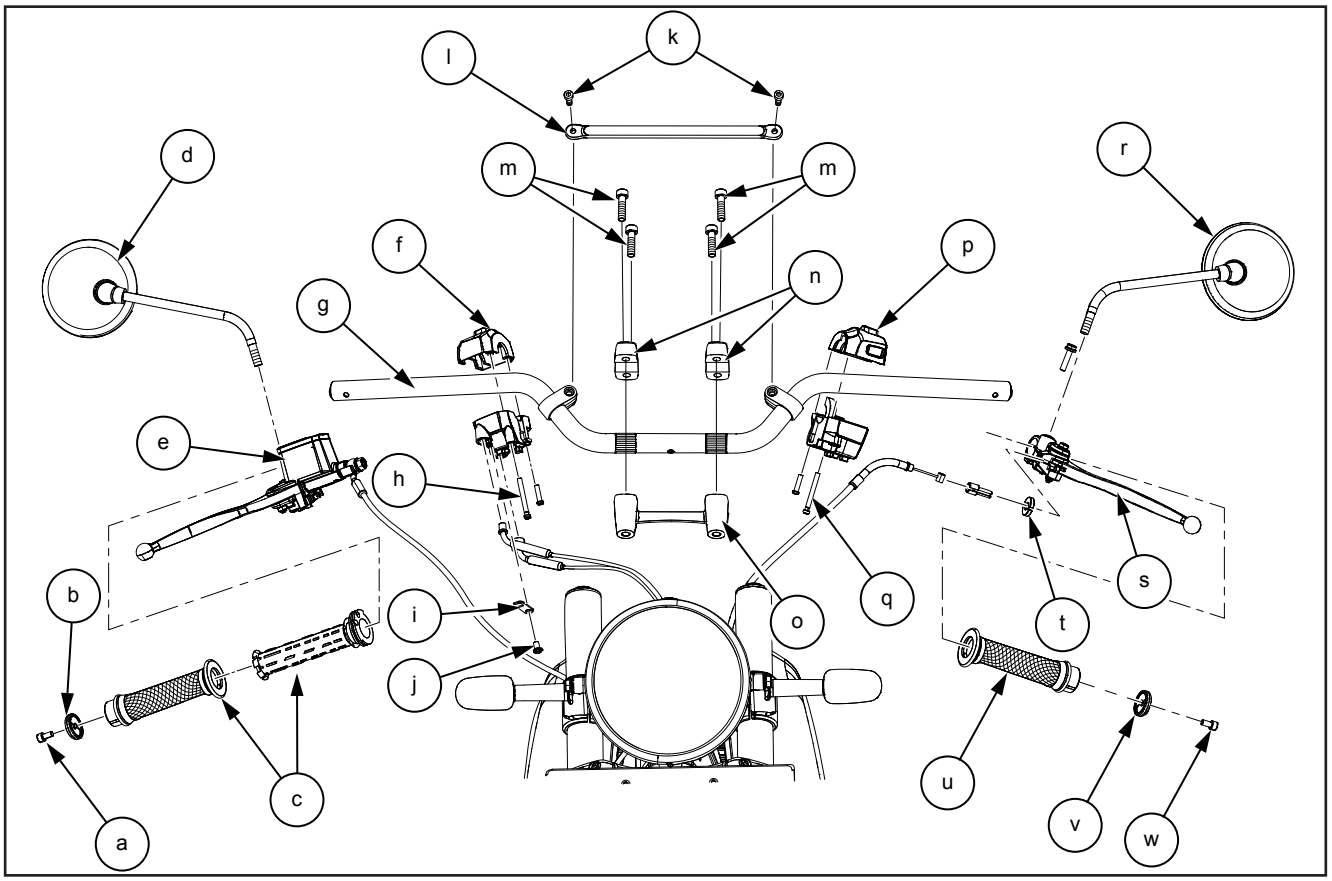

Item No.	Description	Quantity	Item No.	Description	Quantity
a	Balancer Screw	2	m	Hex. Socket HD. Cap Screw, M8x30	4
b	Balancer	2	n	Clamp, Handlebar	2
c	Grip and Throttle Rotor, RH	1	o	Raiser, Handlebar	1
d	Mirror, Rear View, RH	1	p	Switch Module LH	1
e	Reservoir, Front Brake	1	q	Screw	2
f	Switch Module RH	1	r	Mirror, Rear View, LH	1
g	Handlebar	1	s	Clutch Lever with Bracket	1
h	Screws, Switch Module	2	t	Clutch Cable Adjuster	1
i	Clamp, Throttle Cable	1	u	Grip LH	1
j	Screw	1	v	Balancer	1
k	Hex Soc Head Screw - M6 x 20 Screw	2	w	Balancer Screw	1
l	Bar, Handlebar Brace	1			

6.3 Handlebar

Dismantling

6.3.1.Aggregates of Handlebar

- Remove the following parts:
  - Throttle cable (section 6.2.2).
  - Clutch cable (section 6.2.1).
  - Brake master cylinder front (section 9.1.1).
  - Electrical connections on LH and RH handlebars (section 11.1.4).
  - Cable routing straps (section 6.2.2).
- Lift dust cup **(a)**, loosen Hex nut **(M8) (b)** and rotate rear view mirror LH in clockwise direction.

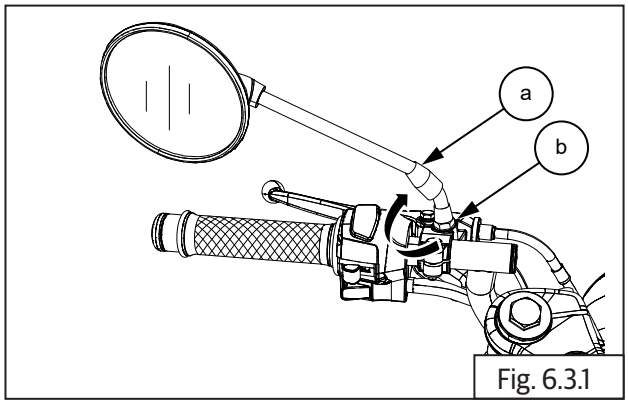

Fig. 6.3.1

	14 mm Double end spanner

⚠ CAUTION

Left hand thread!

DO NOT rotate the mirror after it comes to stop on the bracket as it will cause the bracket to crack.

Always position mirror and lock in place with rider seated on the motorcycle.

- Lift dust cup **(a)**, loosen Hex nut **(M8) (b)** and rotate rear view mirror RH in anticlockwise direction.

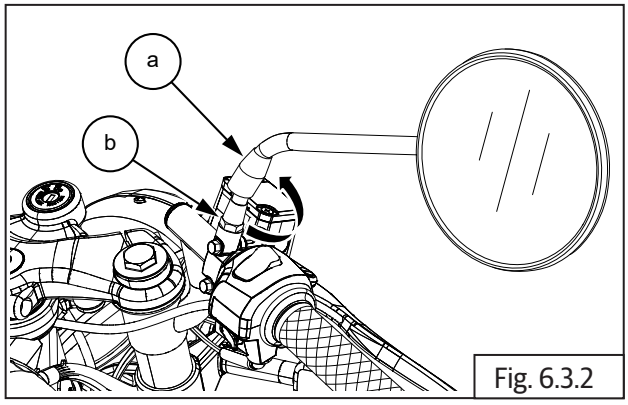

Fig. 6.3.2

	14 mm Double end spanner

- Loosen and remove Hex socket bolt **(M6) (a)** along with balancer **(b)** from handlebar RH.

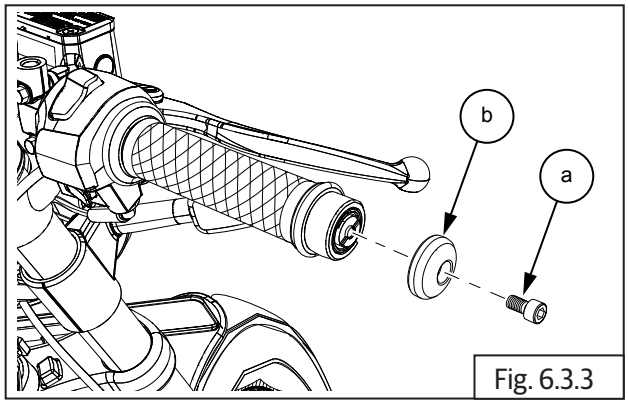

Fig. 6.3.3

	5 mm Allen key

- Disconnect brake lamp switch connectors **(a)** from front brake switch **(b)**.

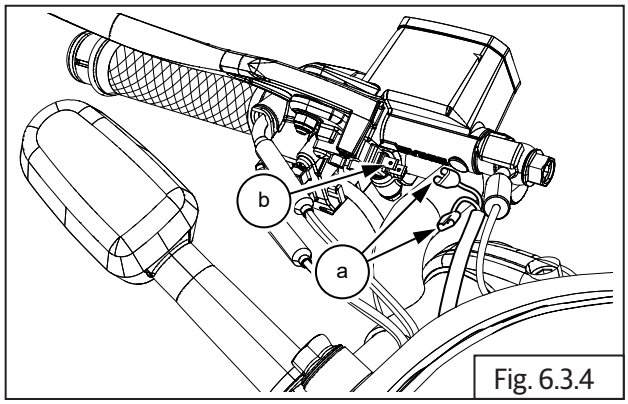

Fig. 6.3.4

- Loosen and remove 2 Nos. Hex flange head bolt **(M5) (a)** to remove master cylinder assembly along with cap.

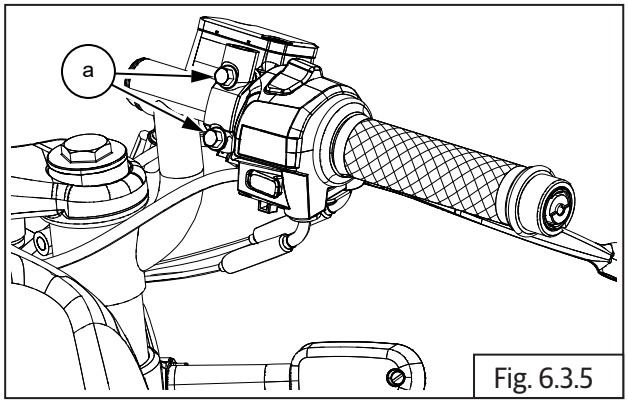

Fig. 6.3.5

	8 mm Socket with Ratchet

⚠ CAUTION

Ensure master cylinder assembly is supported after removing.

- Loosen and remove 2 Nos. Switch module screws **(a)** from RH handlebar.

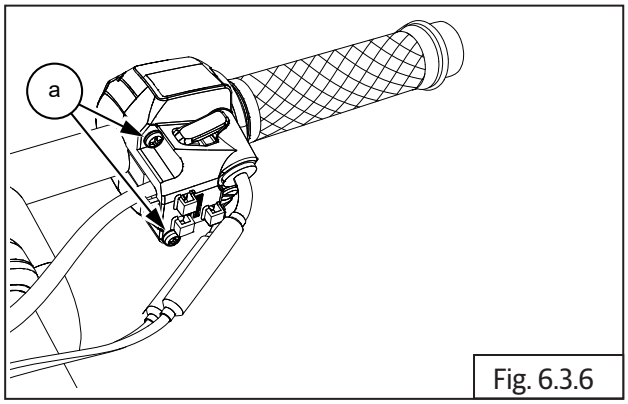

Fig. 6.3.6

	Phillips screw driver

- Gently separate switch module **(a)** top and bottom **(b)** from handlebar RH.

⚠ CAUTION

Support RH switch module carefully after removal.

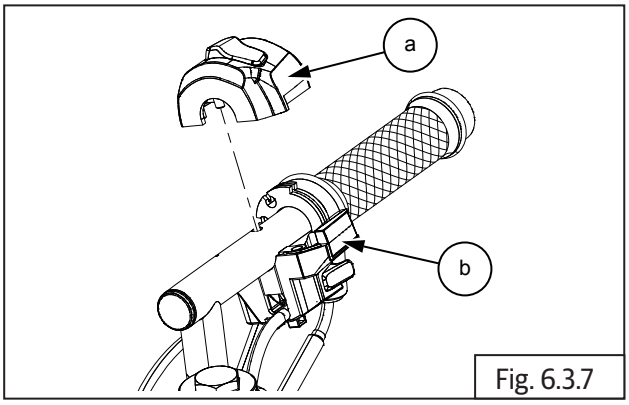

Fig. 6.3.7

- Disconnect throttle cables (section 6.2.2).
- Gently remove throttle rotor **(a)** from the handlebar RH **(b)**.

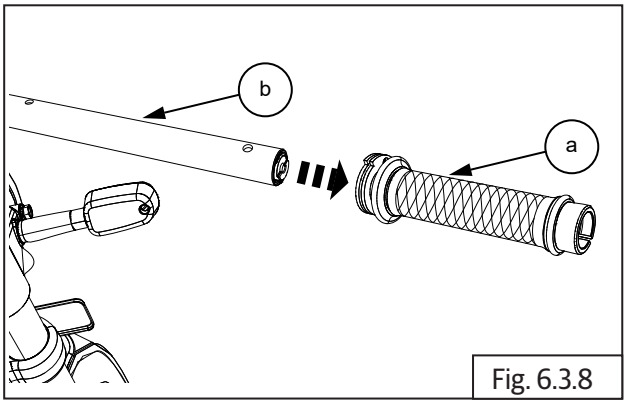

Fig. 6.3.8

- Loosen and remove Hex socket head bolt **(M6) (a)** along with balancer **(b)** from handlebar LH.

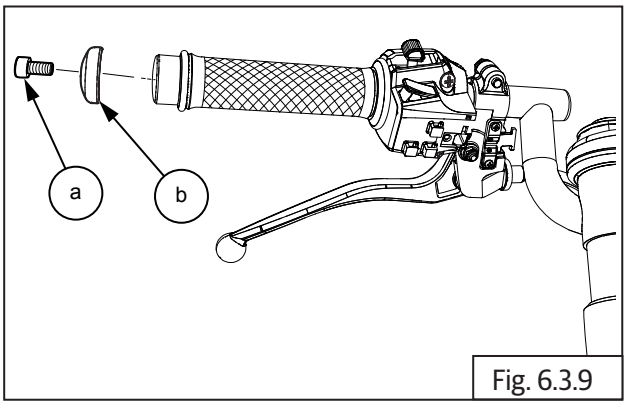

Fig. 6.3.9

	5 mm Socket with Ratchet

- Loosen and remove 2 Nos. screws **(a)** from switch module on handlebar LH.

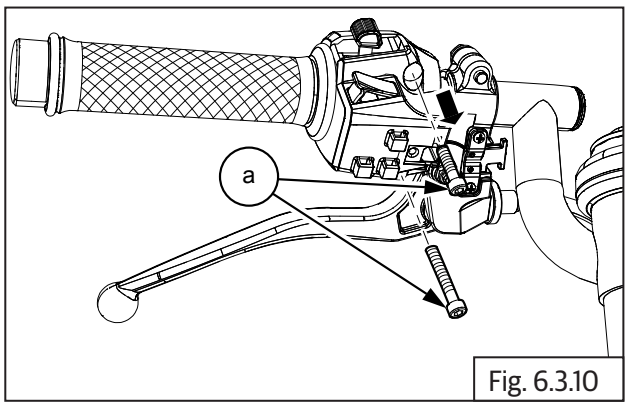

Fig. 6.3.10

	Phillips screw driver

- Gently separate top **(a)** and bottom **(b)** switch module and remove from handlebar LH.

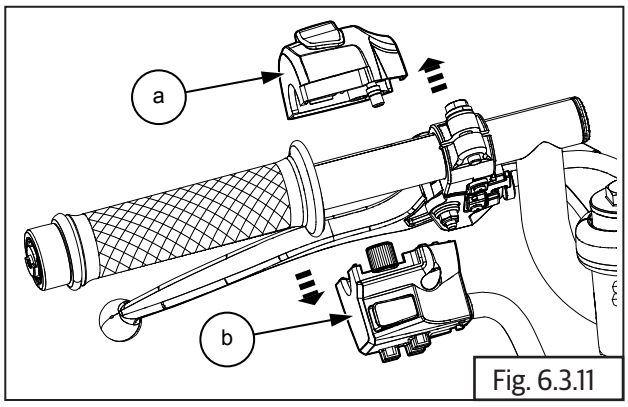

Fig. 6.3.11

- Wrap a cloth soaked in hot water on grip LH **(a)**. Allow time for the grip to become free on handlebar. Gently rotate anti-clockwise and simultaneously pull out from handlebar LH.

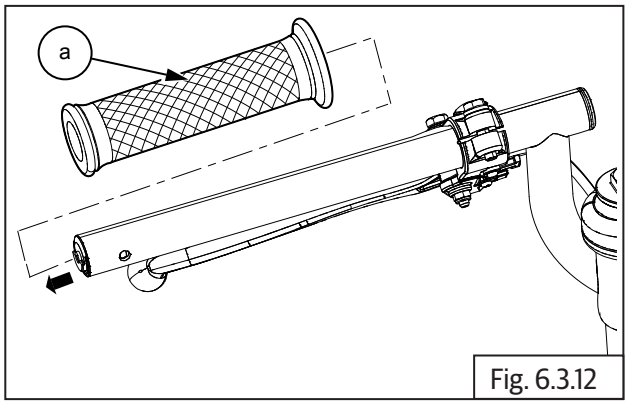

Fig. 6.3.12

- Disconnect clutch cable connections from handlebar LH (section 6.2.1).
- Loosen Hex flanged head bolt **(M6) (a)** sufficiently on clutch lever bracket LH.

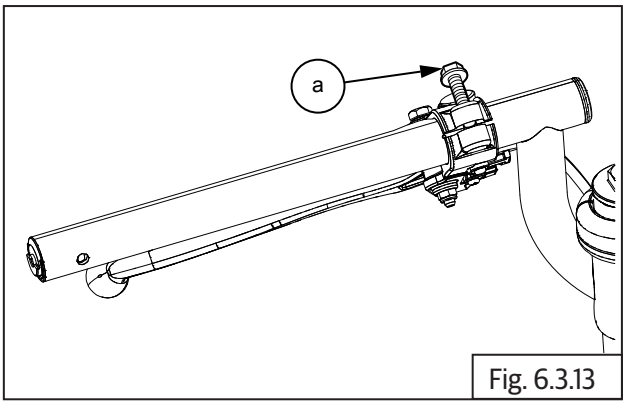

Fig. 6.3.13

	10 mm Socket with Ratchet

- Gently rotate and pull out clutch lever bracket LH **(a)** from handlebar (clip-on) LH.

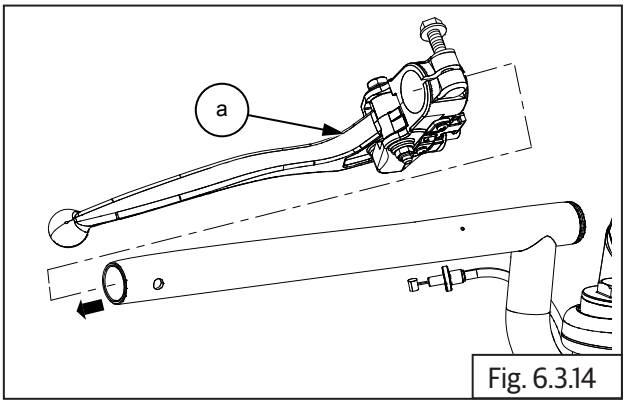

Fig. 6.3.14

6.3.2. Handlebar - Interceptor

- Loosen and remove 2 Nos Hex socket bolts (**M6**) (**a**) to remove handle bar brace.

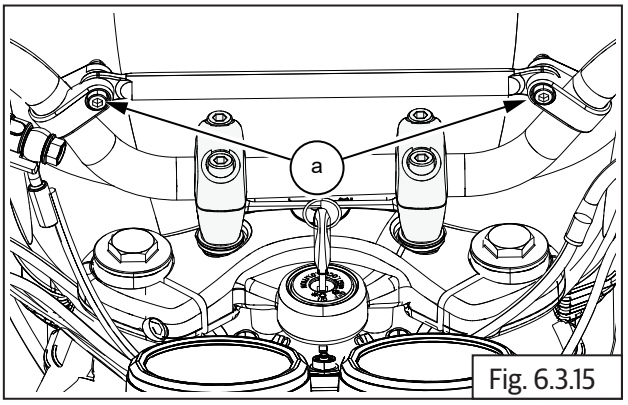

Fig. 6.3.15

- Loosen and remove 4 Nos. Hex socket bolts **(M8) (a)** from clamps on handlebar.

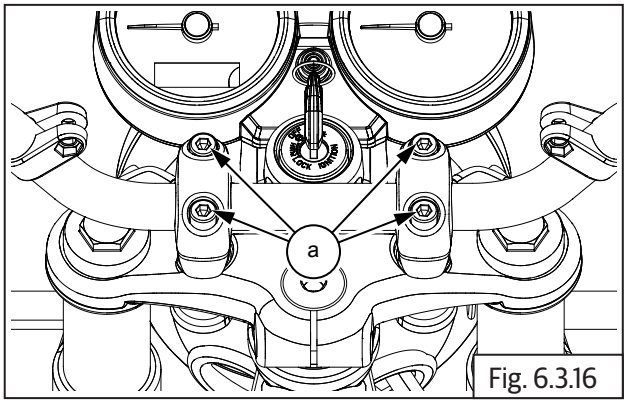

Fig. 6.3.16

	6 mm Allen socket with Ratchet

- Remove 2 Nos. clamps **(a)** from raiser handlebar**.**

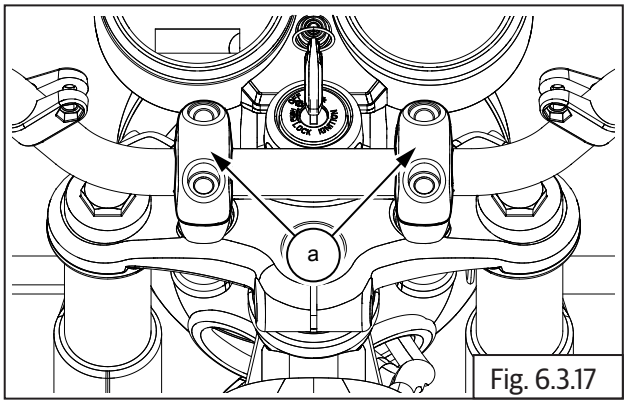

Fig. 6.3.17

- Remove handlebar **(a)** from raiser handlebar.

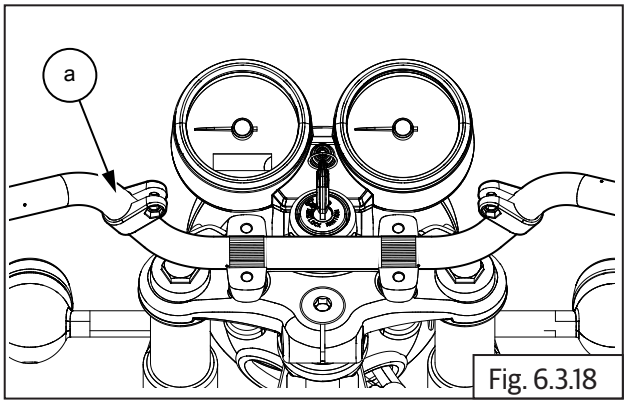

Fig. 6.3.18

- Loosen and remove 2 Nos. Hex head flanged bolts **(M10) (a)** from yoke top and raiser handlebar **(b)**.

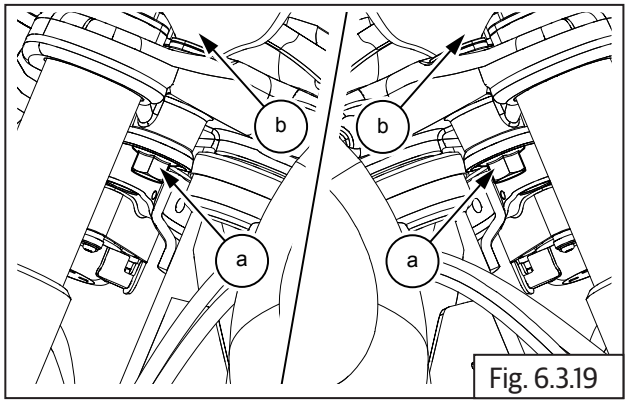

Fig. 6.3.19

	14 mm Socket with Ratchet

- Remove raiser handlebar **(a)** from yoke top **(b)**.

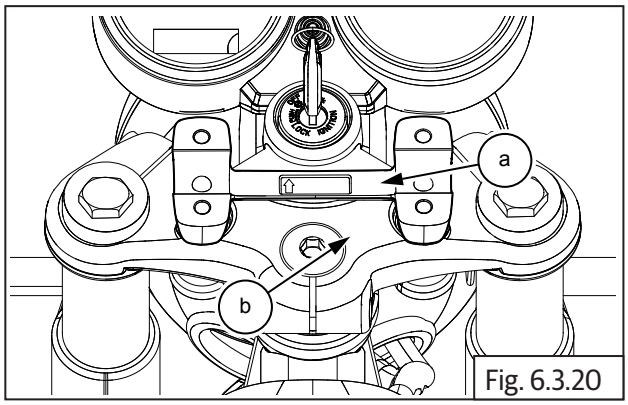

Fig. 6.3.20

- Remove clamp handlebar brace **(a)** from handlebar **(b)**.

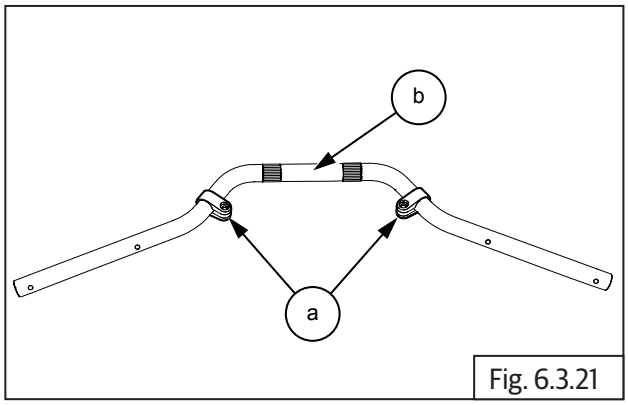

Fig. 6.3.21

6.3.3. Top Yoke - Continental GT

- Loosen and remove 2 Nos. Hex socket bolts **(M6) (a)** holding ignition switch **(b)** from top yoke.

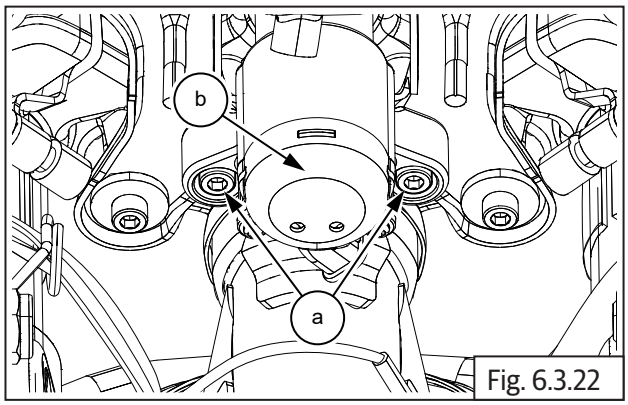

Fig. 6.3.22

	5 mm Allen socket with Ratchet

- Remove ignition switch **(a)** from top yoke.

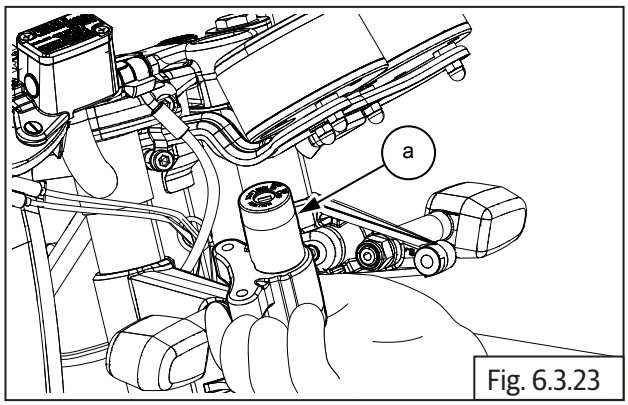

Fig. 6.3.23

- Loosen and remove 2 Nos. Hex socket bolts **(M8) (a)** holding instrument cluster bracket from top yoke.

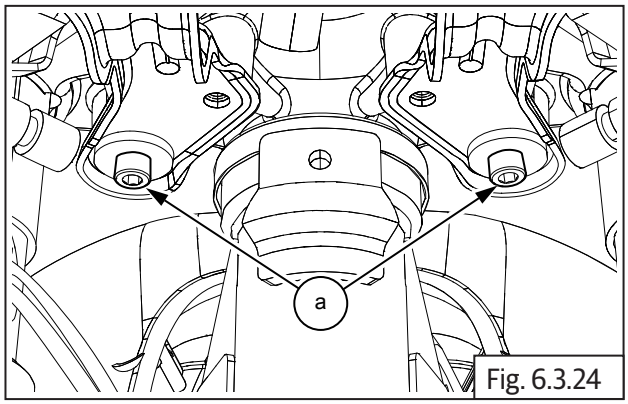

Fig. 6.3.24

	6 mm Allen socket with Ratchet

- Loosen 2 Nos. Hex socket bolts **(M8) (a)** sufficiently on LH and RH sides of top yoke.

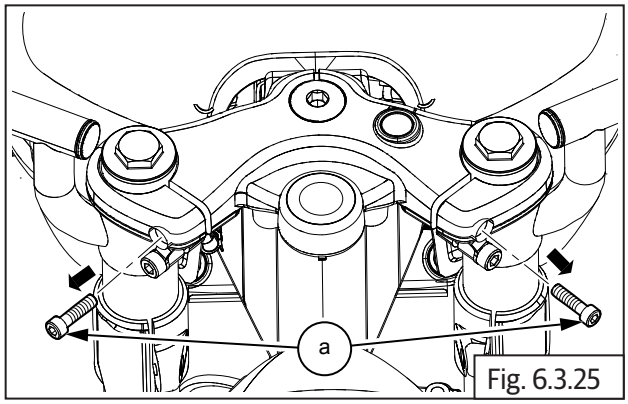

Fig. 6.3.25

	6 mm Allen socket with Ratchet

- Loosen and remove Hex socket head bolt **(M8) (a)** from top yoke **(b)** RH.

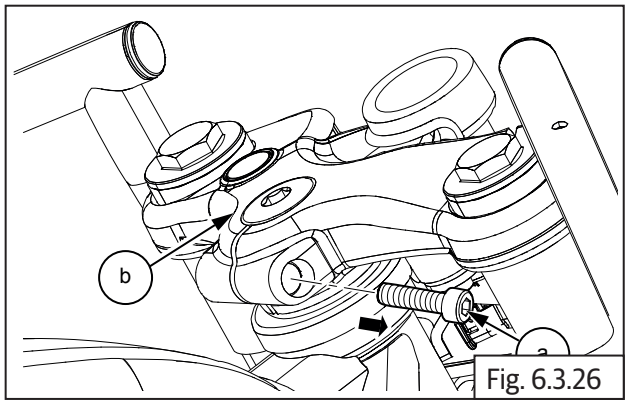

Fig. 6.3.26

	6 mm Socket with Ratchet

- Gently tap and pull out top yoke **(a)** from LH and RH fork assembly.

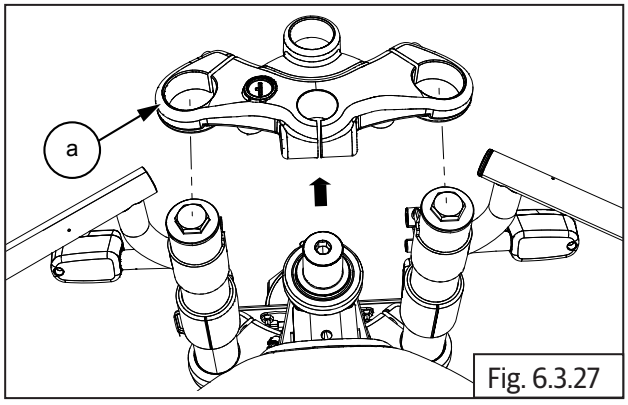

Fig. 6.3.27

6.3.4. Handlebar LH and RH - Continental GT

- Gently remove RH handlebar **(a)** from RH fork **(b)**.

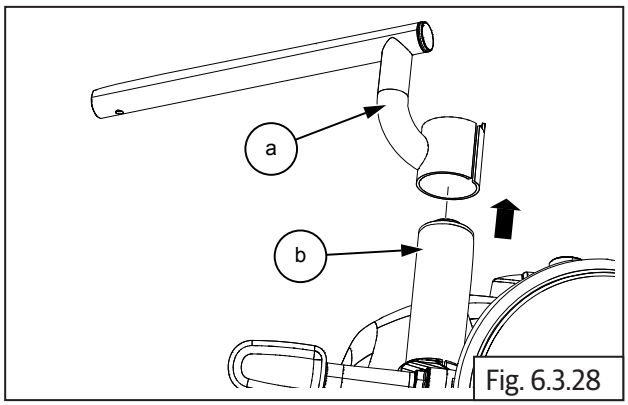

Fig. 6.3.28

- Gently remove LH handlebar **(a)** from LH fork **(b)**.

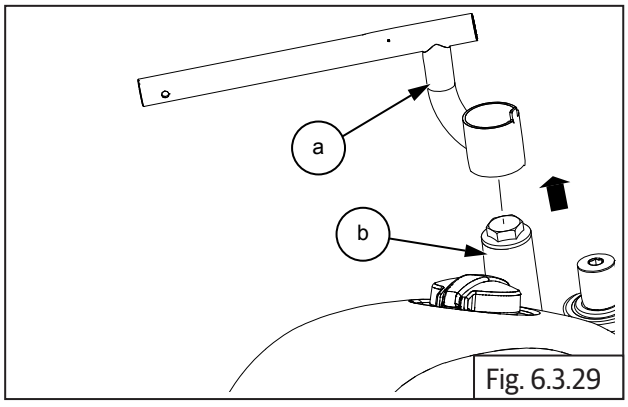

Fig. 6.3.29

Inspection

- Inspect handlebar LH and RH for any bends, cracks or damages. Replace if necessary.
- Inspect rubber grip tightness and replace if it has lost grip.

Assembly

6.3.5. Handlebar LH and RH - Continental GT

- Locate LH Handlebar **(a)** over LH fork assembly **(b)** with the locating peg **(C)** facing upwards.

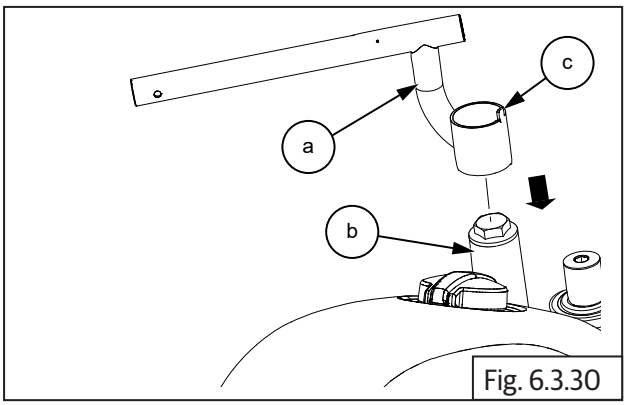

Fig. 6.3.30

- Locate RH handlebar **(a)** over RH fork assembly **(b)** with the locating peg **(C)** facing upwards.

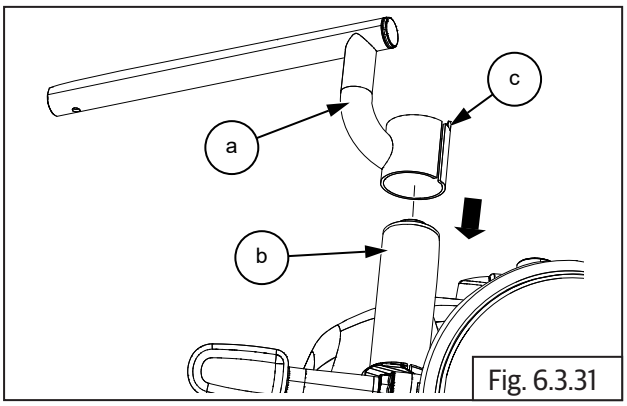

Fig. 6.3.31

6.3.6. Top Yoke

- Locate top yoke **(a)** on the LH and RH fork assembly and ensure the locating peg on LH and RH handlebars are seated properly in the top yoke.

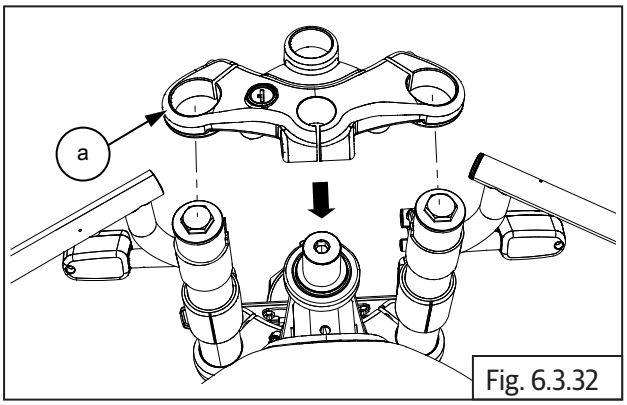

Fig. 6.3.32

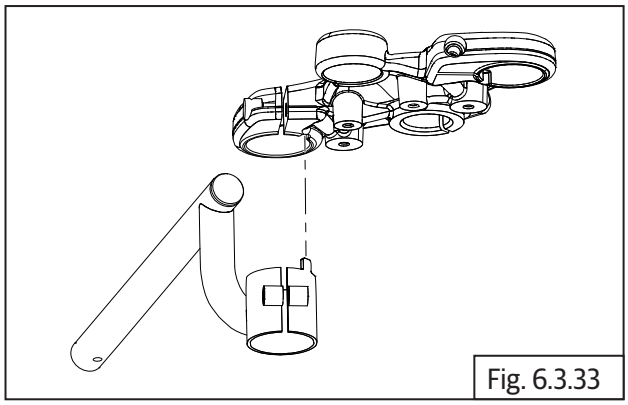

Fig. 6.3.33

- Insert and tighten Hex socket head bolt **(M8) (a)** on top yoke RH **(b)**.

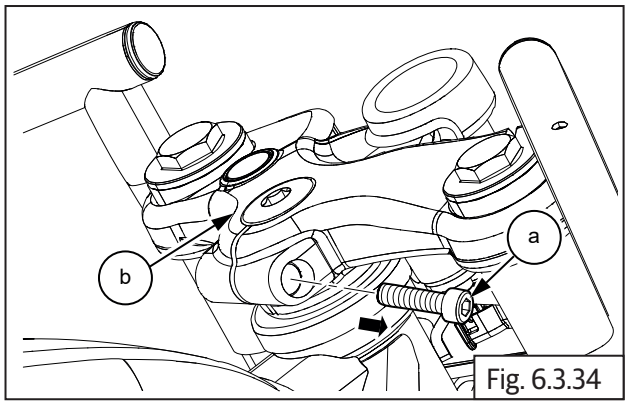

Fig. 6.3.34

	6mm Socket with Ratchet
Torque	20 N-m/2.03 kgf-m

- Insert and tighten 2 Nos. Hex socket bolts **(M8) (a)** into top yoke.

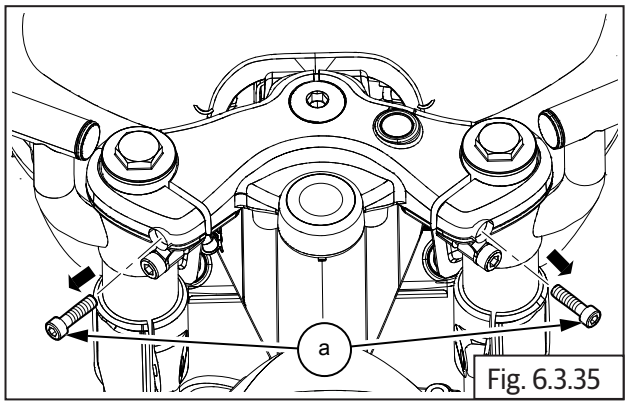

Fig. 6.3.35

	6 mm Socket with Ratchet
Torque	20 N-m/2.0 kgf-m

- Position the instrument cluster mounting bracket on top yoke, align the mounting holes and tighten bracket to top yoke with 2 Nos. Hex socket head bolts **(M8) (a)**.

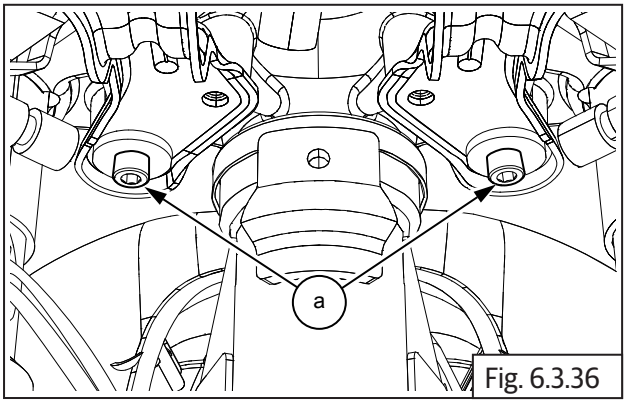

Fig. 6.3.36

	5 mm Allen socket with Ratchet

- Insert ignition switch into top yoke from bottom, align mounting holes and tighten ignition switch **(a)** to top yoke with 2 Nos. Hex socket bolts **(M6) (b)**.

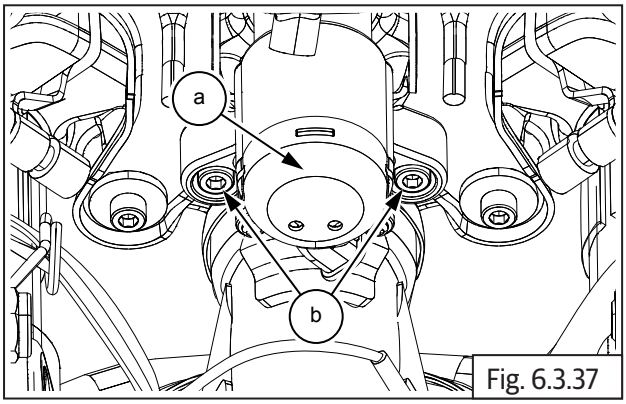

Fig. 6.3.37

	5 mm Socket with Ratchet

6.3.7. Handlebar - Interceptor

- Locate raiser handlebar **(a)** into yoke top **(b)**.

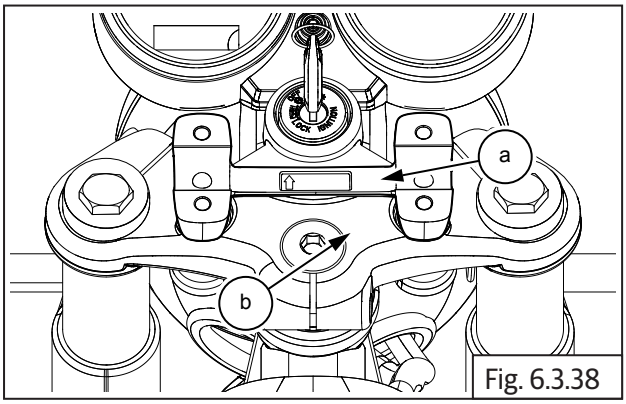

Fig. 6.3.38

- Locate and tighten 2 Nos. Hex flange head bolts **(M10) (a)** into yoke top and raiser handlebar **(b).**

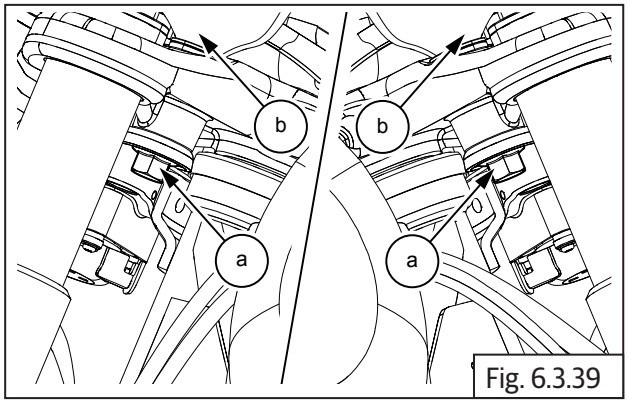

Fig. 6.3.39

	14 mm Socket with Ratchet
Torque	45 N-m/4.5 kgf-m

- Assemble clamps handlebar brace **(a)** into handlebar **(b).**

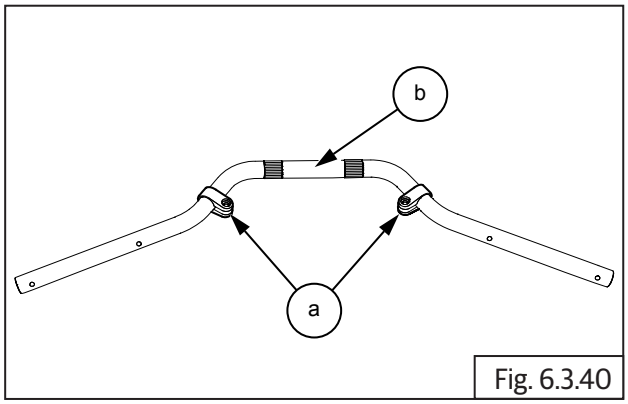

Fig. 6.3.40

- Assemble handlebar **(a)** into raiser handlebar **(b).**

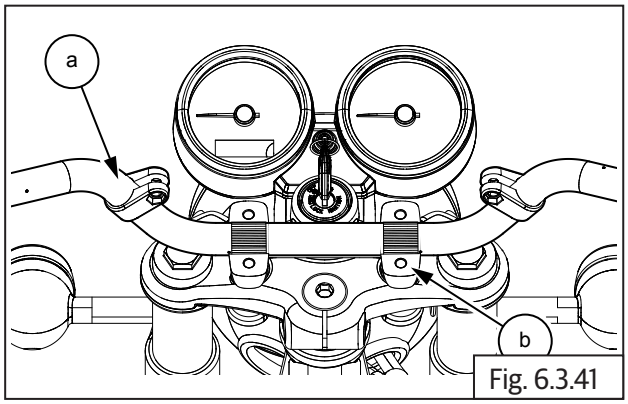

Fig. 6.3.41

- Install clamp handlebar **(a)** into handlebar.

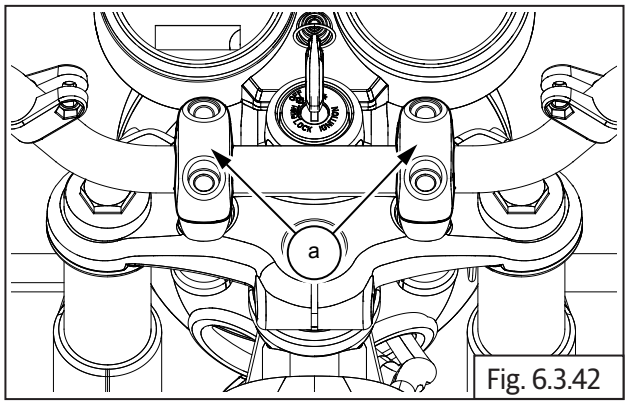

Fig. 6.3.42

NOTE
• *Ensure the steering handlebar align marks/dots are matched with clamp handlebar parallel.*

- Locate and tighten 4 Nos. Hex socket bolts **(M8) (a)** into clamp handlebar.

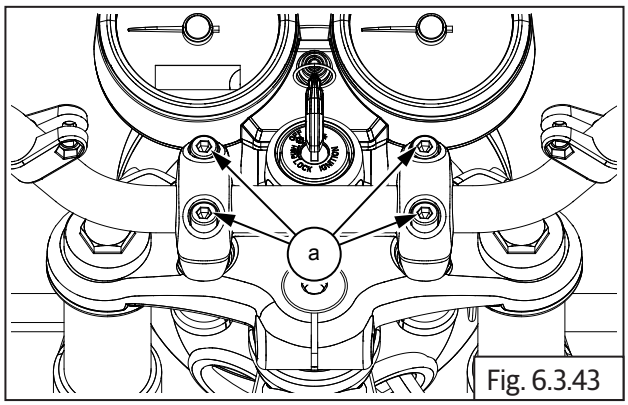

Fig. 6.3.43

	6 mm Allen socket with Ratchet
Torque	20 N-m/2.0 kgf-m

- Insert and thignten 2 Nos Hex socket bolts (**M6**) (**a**) to assemble handle bar brace.

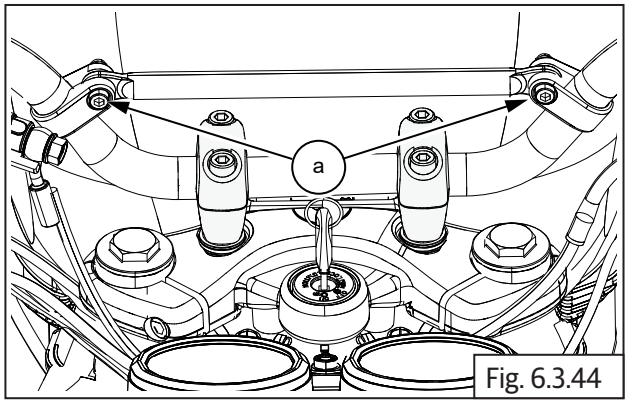

Fig. 6.3.44

6.3.8. Aggregates of Handlebar - Continental / Interceptor

- Insert clutch lever bracket **(a)** on LH handlebar till the mounting hole switch module is visible.

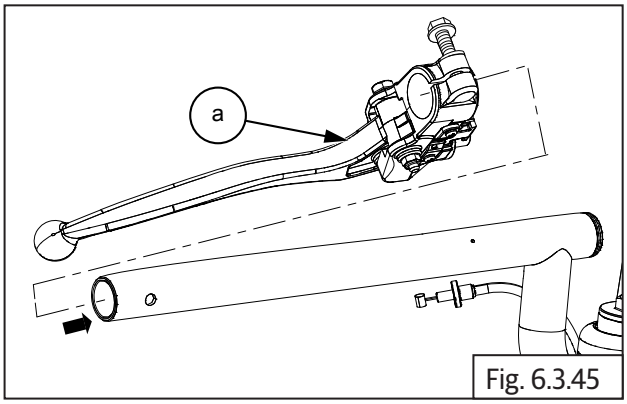

Fig. 6.3.45

- Assemble switch module top **(a)** and bottom **(b)** on handlebar LH. Ensure peg **(c)** on LH switch module top half is correctly located in the hole in handlebar.

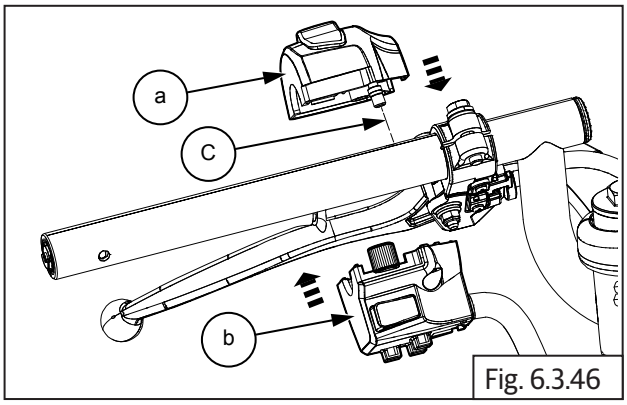

Fig. 6.3.46

- Insert the long screw **(a)** into front mounting hole of switch module LH from bottom and tighten just sufficiently.

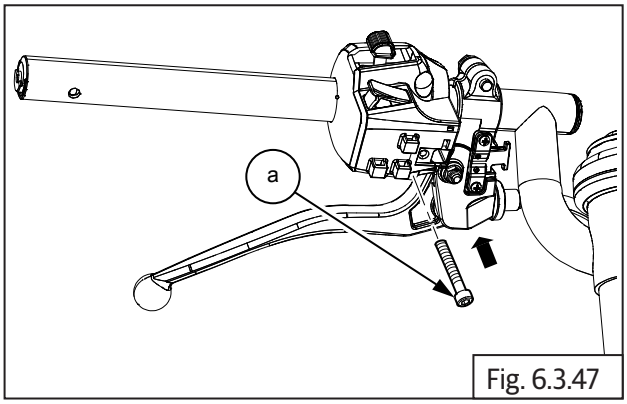

Fig. 6.3.47

- Insert short screw **(a)** into rear mounting hole of switch module LH from bottom and tighten just sufficiently. Tighten both screws evenly and completely.

⚠ CAUTION
DO NOT over tighten

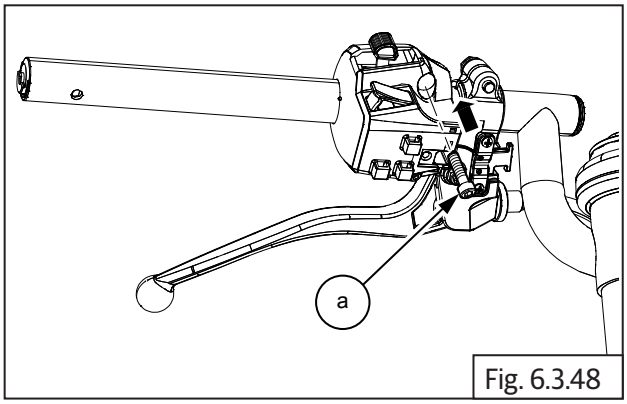

Fig. 6.3.48

	Phillips screw driver

- Soak grip into hot water for a few minutes and assemble grip **(a)** on LH handlebar till it rests on the switch module.

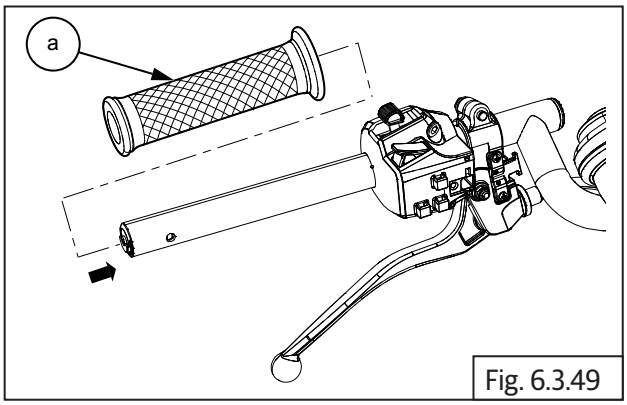

Fig. 6.3.49

- Insert and tighten Hex socket head bolt **(M6) (a)** along with balancer **(b)** into handlebar LH.

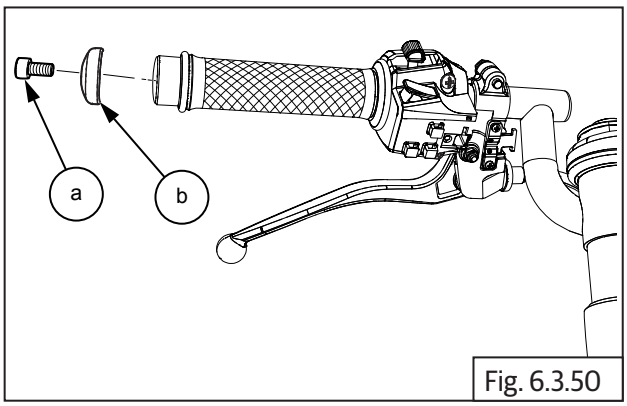

Fig. 6.3.50

	5 mm Socket with Ratchet

- Position clutch lever bracket against switch module LH and ensure clutch lever **(a)** is slightly lower than hand grip LH **(b)**.

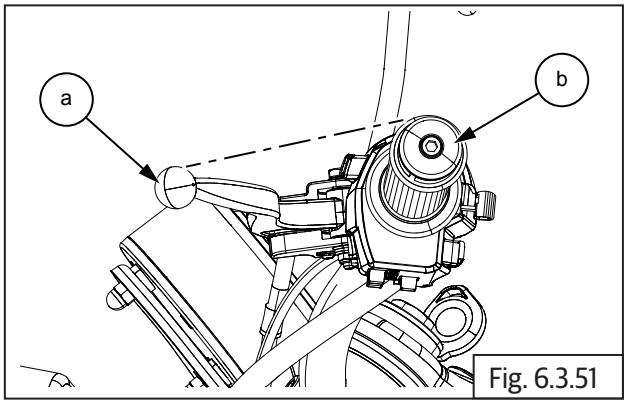

Fig. 6.3.51

- Tighten Hex head bolt **(M6) (a)** on lever bracket LH just sufficiently, duly ensuring bracket does not rotate on handlebar.

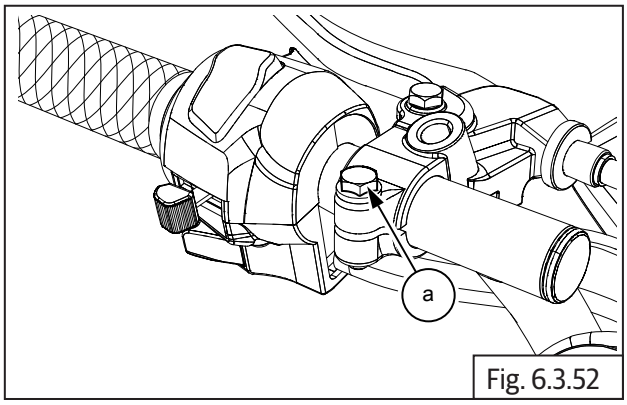

Fig. 6.3.52

	10 mm Double end spanner

⚠ CAUTION

DO NOT over tighten bolt as it will cause bracket to crack.

- Assemble clutch cable (section 6.2.5).
- Gently install grip **(a)** into throttle rotor **(b)** RH.

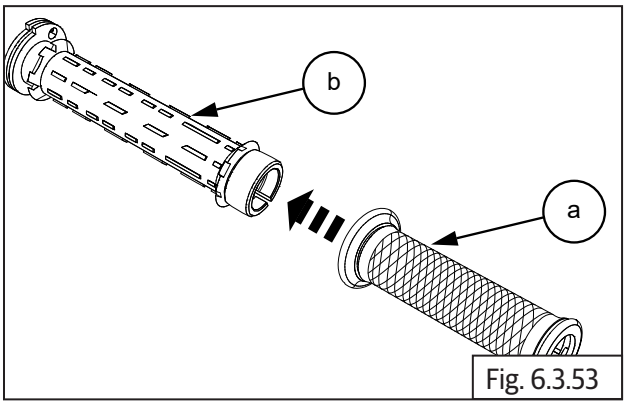

Fig. 6.3.53

- Lubricate throttle rotor grip inside with general purpose grease and assemble on handlebar RH.
- Ensure the cable slots on the rotor are facing above for correct and ease of assembly of inner cables.

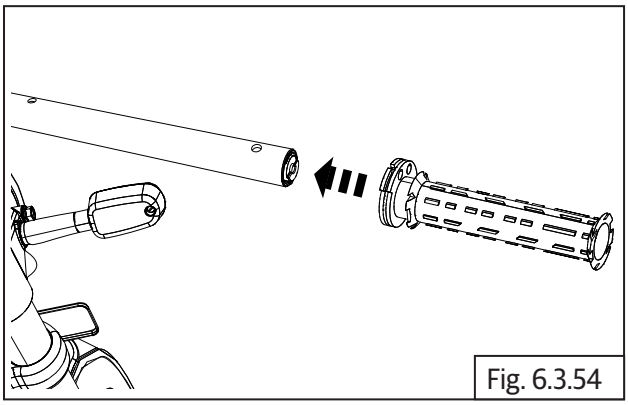
Fig. 6.3.54

- Insert throttle cables **(a)** into the bottom housing of switch module RH with dummy plug **(b)** (section 6.2.3).

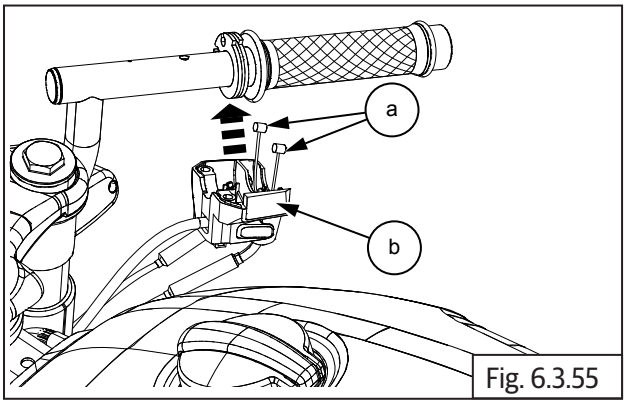

Fig. 6.3.55

- Connect throttle cables to throttle rotor grip (section 6.2.3).
- Assemble switch module top **(a)** and bottom **(b)** on handlebar RH. Ensure peg **(c)** on RH switch

module top half is correctly located in the hole in handlebar.

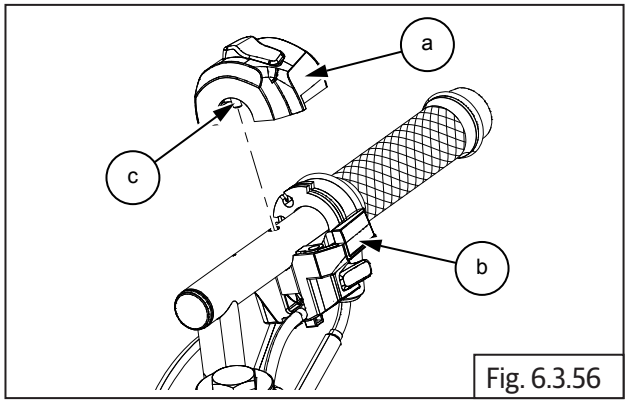

Fig. 6.3.56

- Insert long screw **(a)** into the front mounting hole of switch module RH from the bottom and tighten just sufficiently.

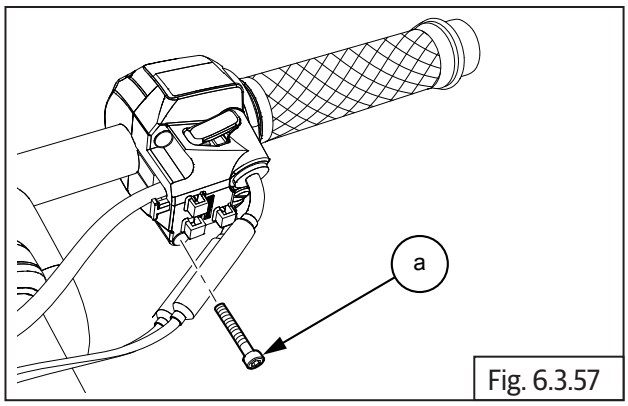

Fig. 6.3.57

- Insert the short screw **(a)** into the rear mounting hole of switch module RH from the bottom and tighten just sufficiently. Tighten both screws evenly and completely.

! CAUTION
DO NOT over tighten

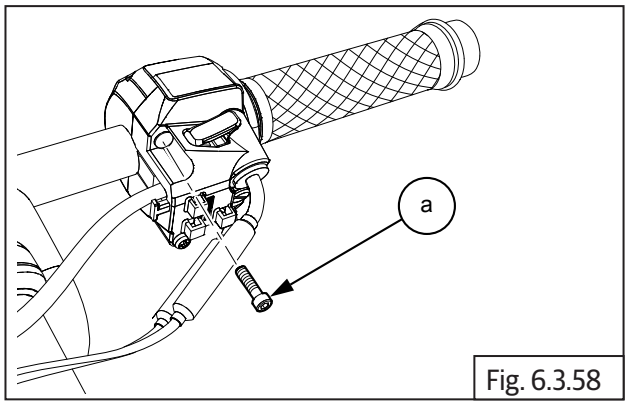

Fig. 6.3.58

	Phillips screw driver

- Position the master cylinder bracket against the switch module RH, ensure the lever is slightly lower than the throttle rotor RH.

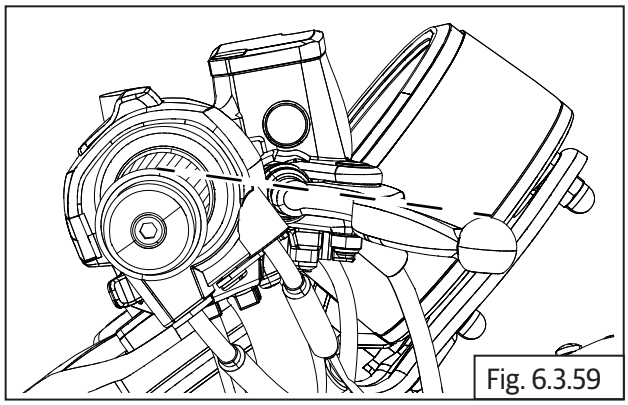
Fig. 6.3.59

- Locate clamp on handlebar RH and tighten 2 Nos. Hex head bolts **(M5) (a)** just sufficiently, duly ensuring bracket does not rotate on handlebar. **DO NOT OVER TIGHTEN.**

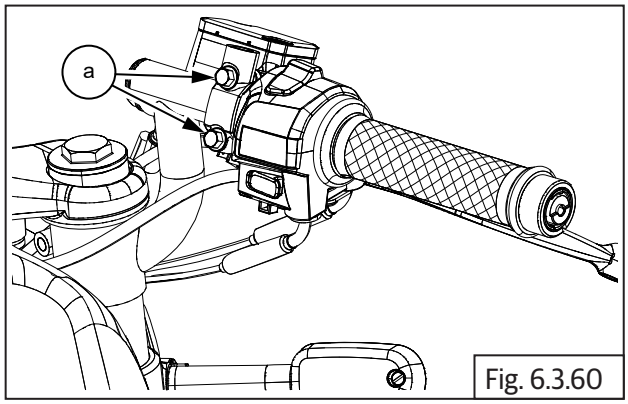

Fig. 6.3.60

	8 mm Double end spanner
Torque	5 N-m/0.5 kgf-m

- Connect brake lamp switch connectors **(a)** to brake switch pins **(b)**.

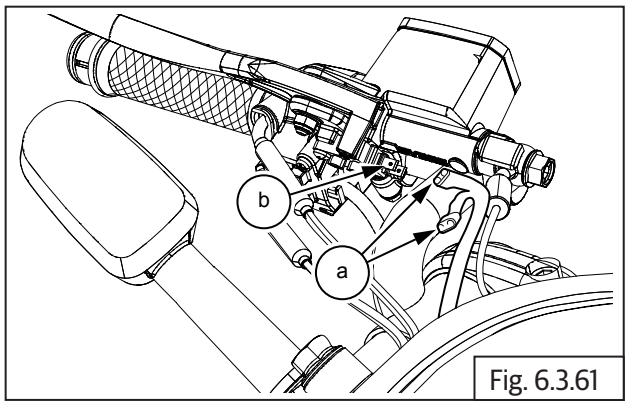

Fig. 6.3.61

- Insert and tighten Hex socket bolt **(M6) (a)** along with balancer **(b)** on handlebar RH.

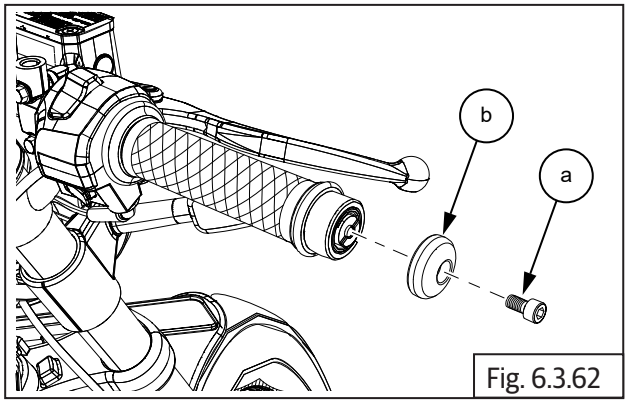

Fig. 6.3.62

	5 mm Allen key

- Ensure lock nut on mirror RH stem is fully tightened.
- Locate thread portion of rear view mirror stem **(a)** on threads on master cylinder bracket, rotate clockwise till mirror comes to stop.
- Rotate mirror clockwise for adjusting the view and tighten lock nut **(M8)** against bracket.

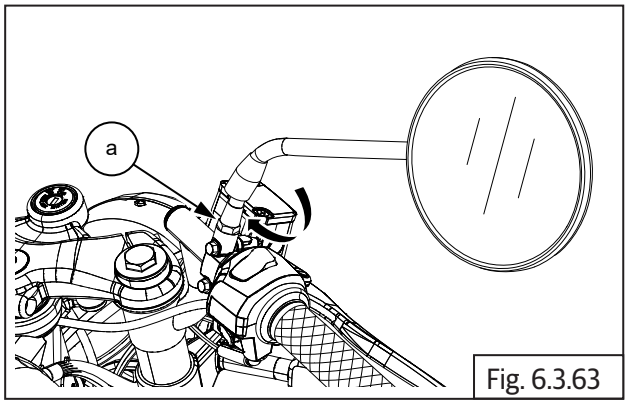

Fig. 6.3.63

	14 mm Double end spanner

⚠ CAUTION

DO NOT rotate the mirror after it comes to stop on the bracket as it will cause the bracket to crack.

Always position mirror and lock in place with rider seated on the motorcycle.

- Ensure lock nut on mirror LH stem is fully tightened.
- Locate threaded portion of rear view mirror stem **(a)** on threads on clutch lever cylinder bracket, rotate anticlockwise till mirror comes to stop.
- Rotate mirror clockwise for adjusting the view and tighten lock nut **(M8)** against bracket.

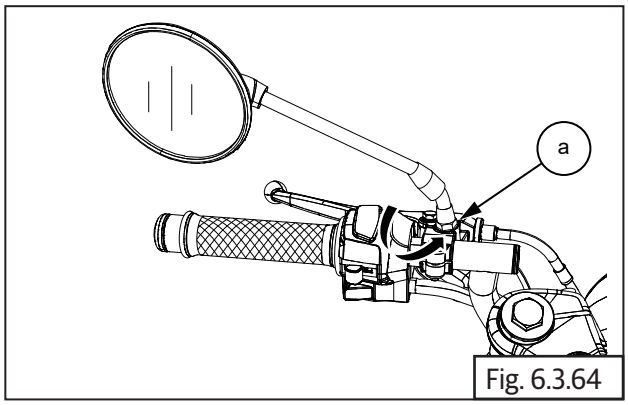

Fig. 6.3.64

	14 mm Double end spanner

⚠ CAUTION

Left hand thread

DO NOT rotate the mirror after it comes to stop on the bracket as it will cause the bracket to crack.

Always position mirror and lock in place with rider seated on the motorcycle.

- After assembly, check proper functioning of electrical components.

Troubleshooting

Symptom	Possible Cause	Diagnosis	How to Fix	Recommended Specification
Vibrations transmitted to rider while riding	Tyre pressures are more than recommended.	Improper front and rear tyre pressures.	Ensure correct tyre pressures.	**Solo:** Front tyre: 32 psi/2.2 kg/cm^2. Rear tyre: 36 psi/2.53 kg/cm^2. **With Pillion:** Front tyre: 32 psi/2.2 kg/cm^2. Rear Tyre: 39 psi/2.74 kg/cm^2.
	Handlebar balancers are loose.	Balancer mountings are loose/threads are worn-out.	Tighten balancer mountings/replace balancers.	Torque: 5 N-m/0.5 kgf-m
	Continental GT 650 twin: Clip-on pinch bolts are loose on fork main tubes. Interceptor 650 Twin: Handlebar clamp fasteners are loose on top yoke.	Fasteners loose/ threads worn-out	Check and tighten fasteners/ replace fasteners/ handlebar clip-ons/ top yoke	Torque: 20 N-m/2.0 kgf-m Torque: 45 N-m/4.5 kgf-m
	Handlebar is cracked at mounting location.	Clip-on/handlebar clamping locations has minor cracks.	Replace clip-ons/ handlebar	
Uneasiness/pain felt on one shoulder	Continental GT 650 twin: Clip-on/s are bent. Interceptor 650 Twin: Handlebar is bent/misaligned.	One or the other clip-on is bent/ handlebar is bent. Handlebar alignment dots are not correct.	Replace clip-ons/ handlebar. Ensure correct positioning of the handlebar alignment dots with respect to top yoke.	

NOTE
• *The troubleshooting given in this section is only related to issues with Handlebar. For complaints like unstable riding, wobbling, etc., it will be necessary to check other aggregates like wheel, front/rear suspension and so on.*

EXHAUST PIPES AND SILENCERS

CONTENTS PAGE

6.4. Exhaust Pipes and Silencers 389

Dismantling..... 389

6.4.1. Hego/Oxygen Sensor Connectors 389

6.4.2. Exhaust Pipe and Silencer LH 389

6.4.3. Hego/Oxygen Sensor 390

Assembly 390

6.4.4. Hego/Oxygen Sensor 390

6.4.5. Exhaust Pipe and Silencer LH 391

6.4.6. Hego/Oxygen Sensor Connectors 392

Troubleshooting..... 393

6.4. Exhaust Pipes and Silencers

⚠ CAUTION

DO NOT perform any operation on exhaust pipes and silencers soon after the motorcycle is OFF.

They can extremely hot and will cause serious injuries.

Always wait until the silencer is completely cooled down.

Dismantling

6.4.1. Hego/Oxygen Sensor Connectors

- Disconnect Hego/oxygen sensor connectors **(a)** from both LH and RH on the front side of engine.

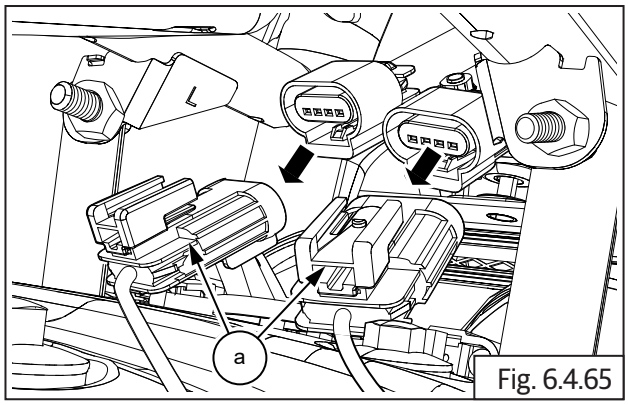

Fig. 6.4.65

6.4.2. Exhaust Pipe and Silencer LH

- Loosen and remove Hex flange head bolt **(M8) (a)** on clamp **(b)** (exhaust pipe to silencer) supporting outer end nut **(M8) (c)** suitably.

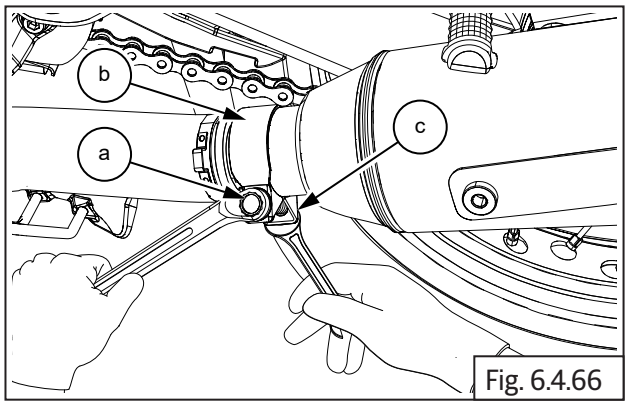

Fig. 6.4.66

	12 mm Ring spanner 12 mm Double end spanner

- Suitably support silencer.
- Loosen and remove Hex head flange bolt **(M8) (a)** from frame bracket **(b)** supporting the outer end nut **(M8) (c)**.
- Disconnect silencer from exhaust pipe.

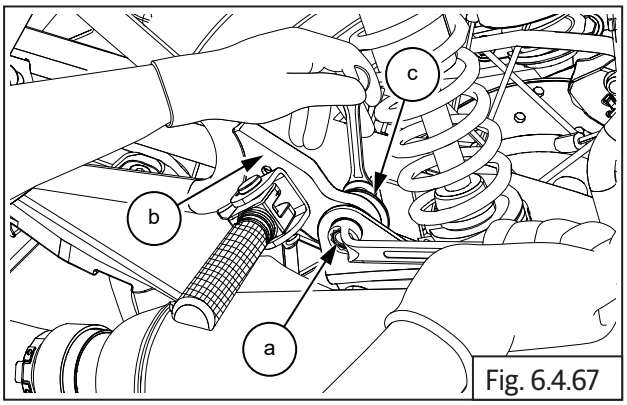

Fig. 6.4.67

	12 mm Ring spanner 12 mm Double end spanner

- Loosen and remove Hex head flange bolt **(M8) (a)** on mounting bracket **(b)**. Ensure Exhaust pipe is supported suitably.

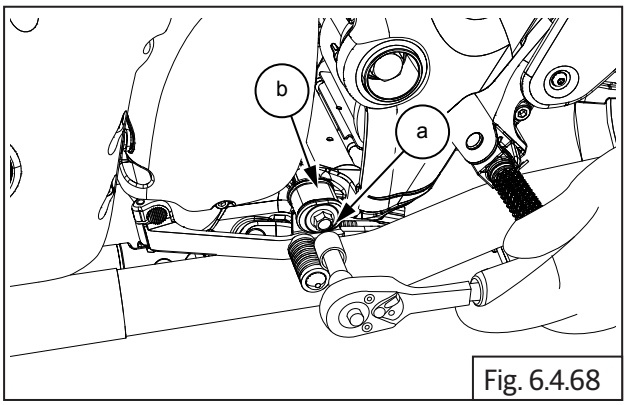

Fig. 6.4.68

	12 mm Socket with Ratchet

- Loosen and remove 2 Nos. Hex head nuts **(M8) (a)** on engine LH side to disconnect LH exhaust pipe **(b)** from cylinder head **(c)**.

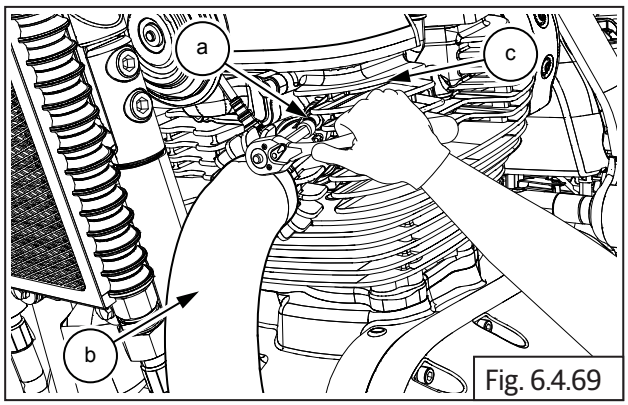

Fig. 6.4.69

	12 mm Socket with Ratchet

- Gently remove the LH exhaust pipe **(a)** along with Hego/oxygen sensor **(b)** and gasket from cylinder head.

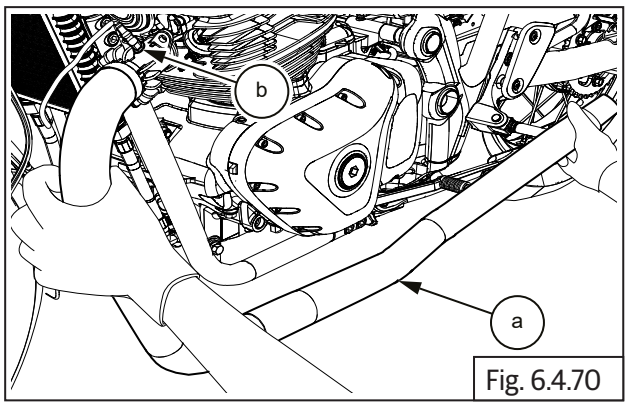

Fig. 6.4.70

- Repeat the procedure to remove exhaust pipe and silencer RH.

6.4.3. Hego/Oxygen Sensor

- Loosen and remove sensor Hex stud **(a)** along with washer from exhaust pipe holding sensor.
- Gently loosen and remove the Hego/Oxygen sensor along with gaskets from the exhaust pipes LH & RH.

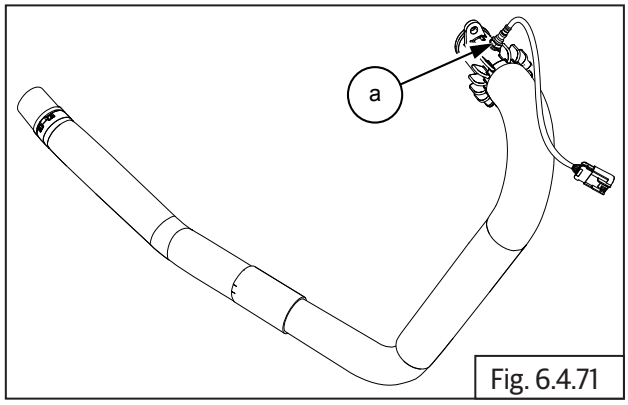

Fig. 6.4.71

	17 mm Double end spanner/Deep groove spanner

Assembly

6.4.4. Hego/Oxygen Sensor

- Locate new gaskets on the Hego/Oxygen sensor and assemble sensor on the exhaust pipes LH & RH and tighten firmly.

⚠ CAUTION

DO NOT over tighten as it damage the sensor.

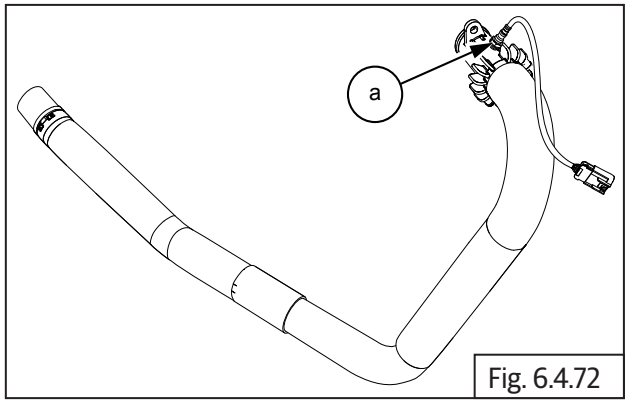

Fig. 6.4.72

	17 mm Double end spanner/Deep groove spanner

6.4.5. Exhaust Pipe and Silencer LH

- Locate exhaust pipe **(a)** into exhaust manifold on cylinder LH and ensure the exhaust pipe flange is properly located on the studs..

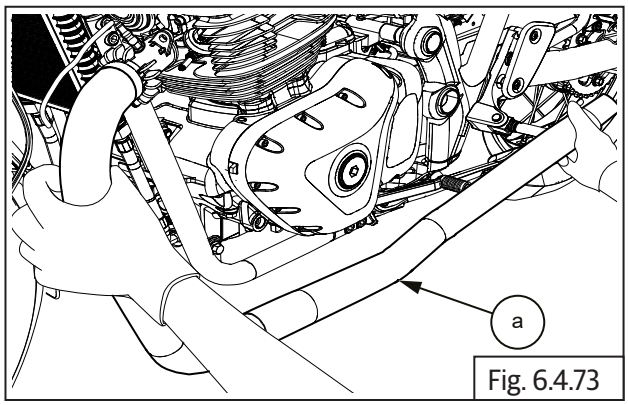

Fig. 6.4.73

- Assemble 2 Nos. Hex nuts **(M8) (a)** on the studs and hand tight to align the rear end mounting.

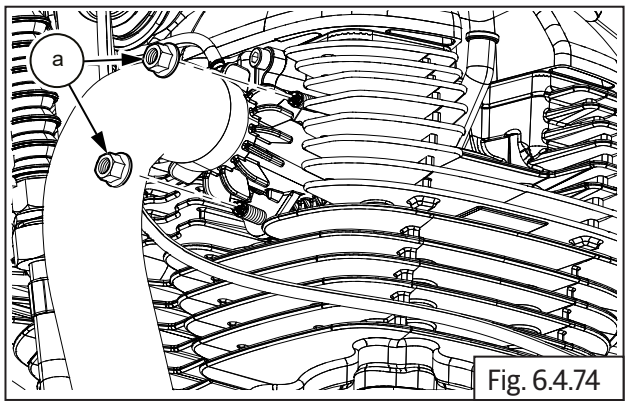

Fig. 6.4.74

	12 mm Socket with Ratchet
Torque	25 N-m/2.5 kgf-m

- Assemble Hex flange head bolt **(M8) (a)** along with washer cup and Hex nut on mounting bracket **(b)** and tighten to specified torque for flange and mounting bracket.

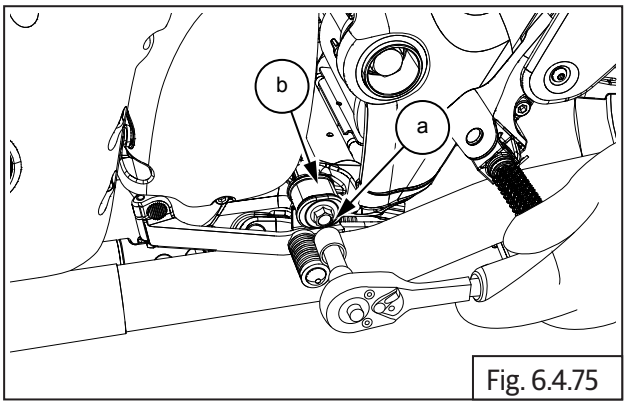

Fig. 6.4.75

	12 mm Socket with Ratchet
Torque	25 N-m/2.5 kgf-m

- Ensure mounting clamp **(a)** on silencer **(b)** is sufficiently loose.
- Assemble new gasket on exhaust pipe **(c)** and locate silencer on exhaust pipe.
- Duly ensure rear mounting bracket of silencer is aligned to the mounting hole of frame LH.

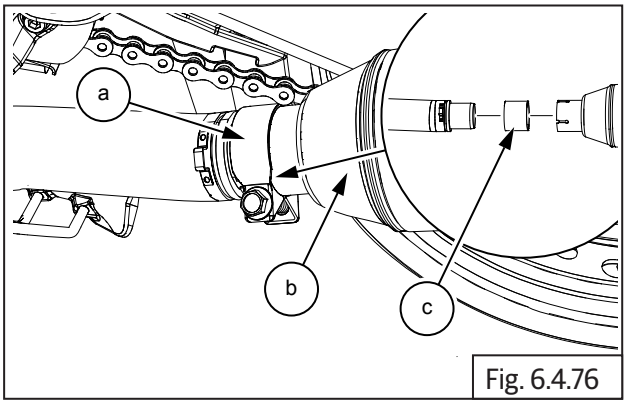

Fig. 6.4.76

	12 mm Ring spanner

- Align silencer mounting bracket hole to main frame mounting hole.
- Insert Hex head bolt **(M8) (a)** into mounting bracket **(b)** along with washer and nut **(c)**. Hold nut and tighten bolt to specified torque.

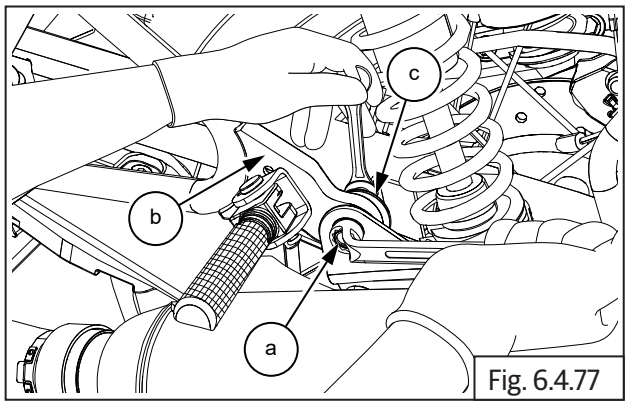

Fig. 6.4.77

	12 mm Socket with Torque wrench 12 mm Double end spanner
Torque	25 N-m/2.5 kgf-m

- Hold Hex head bolt **(M8) (a)** on clamp **(b)** and tighten nut **(c)**.

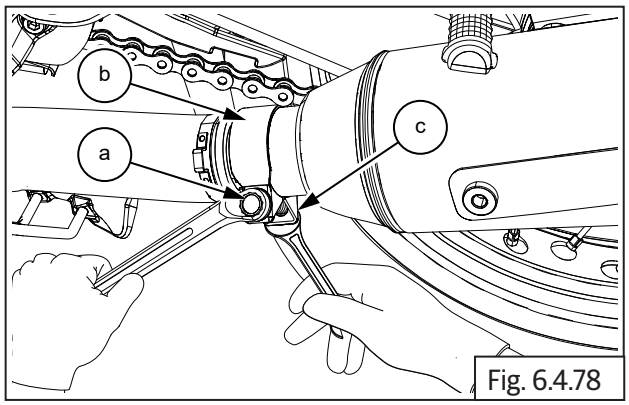

Fig. 6.4.78

	12 mm Ring spanner 12 mm Double end spanner

- Follow above procedure for assembling exhaust pipe and silencer RH.

6.4.6. Hego/Oxygen Sensor Connectors

- Ensure Hego/oxygen sensors are tightened fully on exhaust pipes LH and RH.
- Connect LH & RH Hego/Oxygen sensors connectors **(a)**.
- Ensure connectors are locked properly. (There is a "click" sound when locked.)

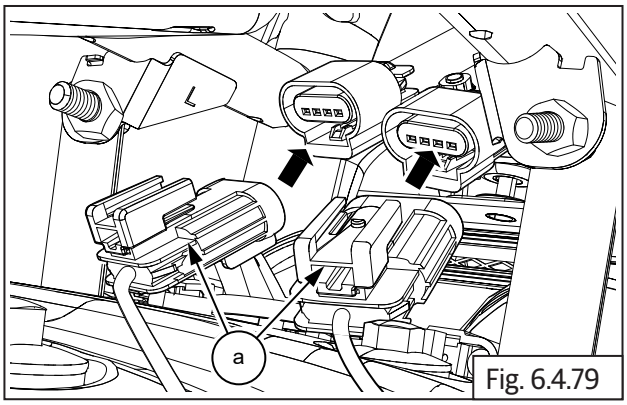

Fig. 6.4.79

Troubleshooting

Symptom	Possible Cause	Diagnosis	How to Fix	Recommended Specification
Vibration/rattling noise from exhaust pipe/s.	Exhaust pipe mounting to cylinder head LH/RH is loose.	Exhaust pipe/s flange mounting to cylinder head is loose/flange is cracked.	Check and tighten flange mounting to torque. Replace exhaust pipe if flange is cracked.	Torque: 25 N-m/2.5 kgf-m
	Exhaust pipe mounting to frame LH/RH is loose.	Fasteners are loose/ mounting clamps are cracked.	Check and tighten fasteners to torque. Replace clamps if they are cracked.	Torque: 25 N-m/2.5 kgf-m
Vibration/rattling noise from silencer/s.	Silencer mounting to frame LH/RH is loose.	Fasteners are loose/mounting clamps are cracked.	Check and tighten fasteners to torque Replace clamps/ silencer if they are cracked.	Torque: 25 N-m/2.5 kgf-m
	Internal baffles in silencer are broken.	Remove silencer and shake to check if internal baffles are cracked.	Replace silencer assembly.	
Exhaust leak from cylinder head joint/ silencer joint.	Gaskets are burnt/ missing.	Gaskets are burnt-out due to loose clamping of exhaust pipe/ silencer.	Replace exhaust pipe/silencer gaskets.	

NOTE

- *The troubleshooting given in this section is only related to issues with noise/leak in the exhaust system. For complaints related to poor pickup, misfiring, etc., please refer to engine section.*

FOOTRESTS/STANDS/SAREE GUARD

CONTENTS PAGE

6.5. Footrests/Stands/Saree Guard 403

Dismantling 403

6.5.1. Footrests LH and RH - Rider 403

6.5.2. Footrest Bracket RH - Rider 403

6.5.3. Footrest Bracket LH - Rider 404

6.5.4. Footrests LH and RH - Pillion 405

6.5.5. Footrest Bracket LH and RH - Pillion 405

6.5.6. Saree Guard (For Indian Market Only) 406

6.5.7. Side Stand 406

6.5.8. Center Stand 407

Inspection 408

Assembly 408

6.5.9. Center Stand 408

6.5.10. Side Stand 409

6.5.11. Saree Guard (For Indian Market Only) 410

6.5.12. Footrest Bracket LH and RH - Pillion 410

6.5.13. Footrests LH and RH - Pillion 410

6.5.14. Footrest Bracket LH - Rider 411

6.5.15. Footrest Bracket RH - Rider 412

6.5.16. Footrests LH and RH - Rider 413

Footrests - Rider RH

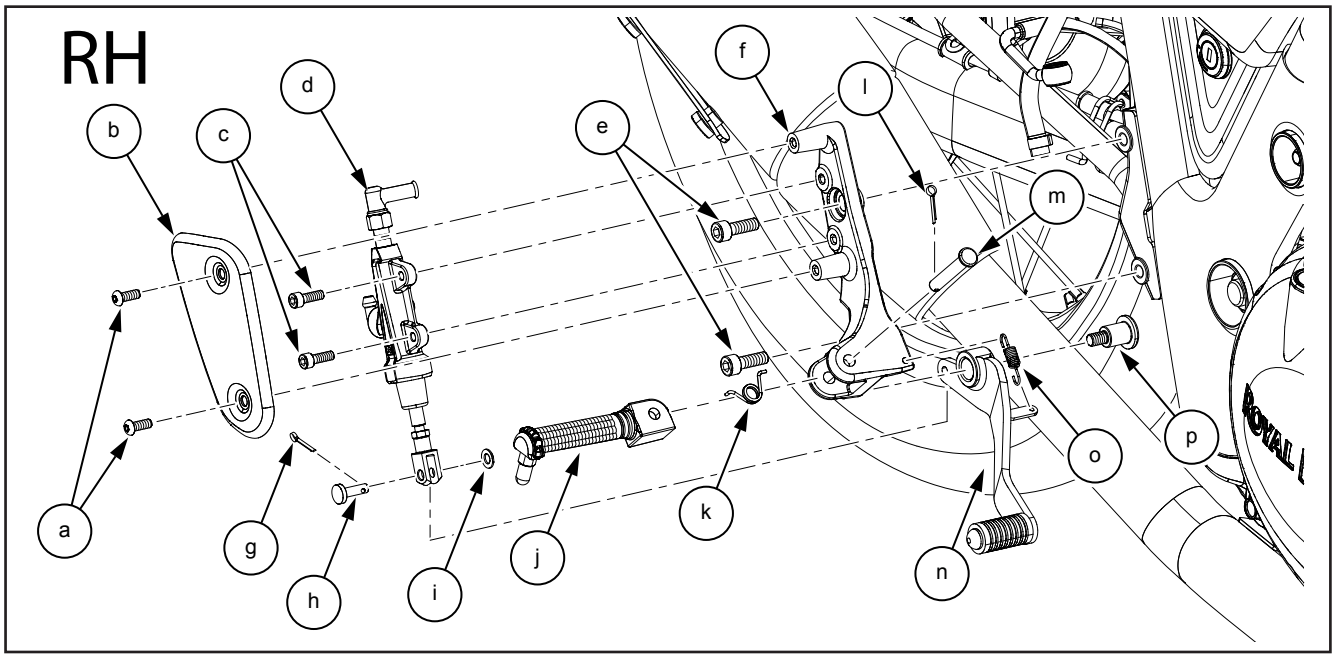

Item No.	Description	Quantity
a	Hex Socket Head Screws (M4)	2
b	Heel Guard Rider RH	1
c	Hex Socket Head Screws (M6)	2
d	Master Cylinder Assembly Rear	1
e	Hex Socket Head Screws (M6)	2
f	Footrest Bracket	1
g	Split Pin	1
h	Clevis Pin Rider Footrest RH	1
i	Washer	1
j	Footrest Rider RH	1
k	Spring - Rider Footrest RH	1
l	Split Pin	1
m	Clevis Pin Brake Pedal Rider RH	1
n	Brake Pedal Rider	1
o	Spring - Brake Pedal Rider RH	1
p	Hex socket bolt (M6)	1

Footrests - Rider LH

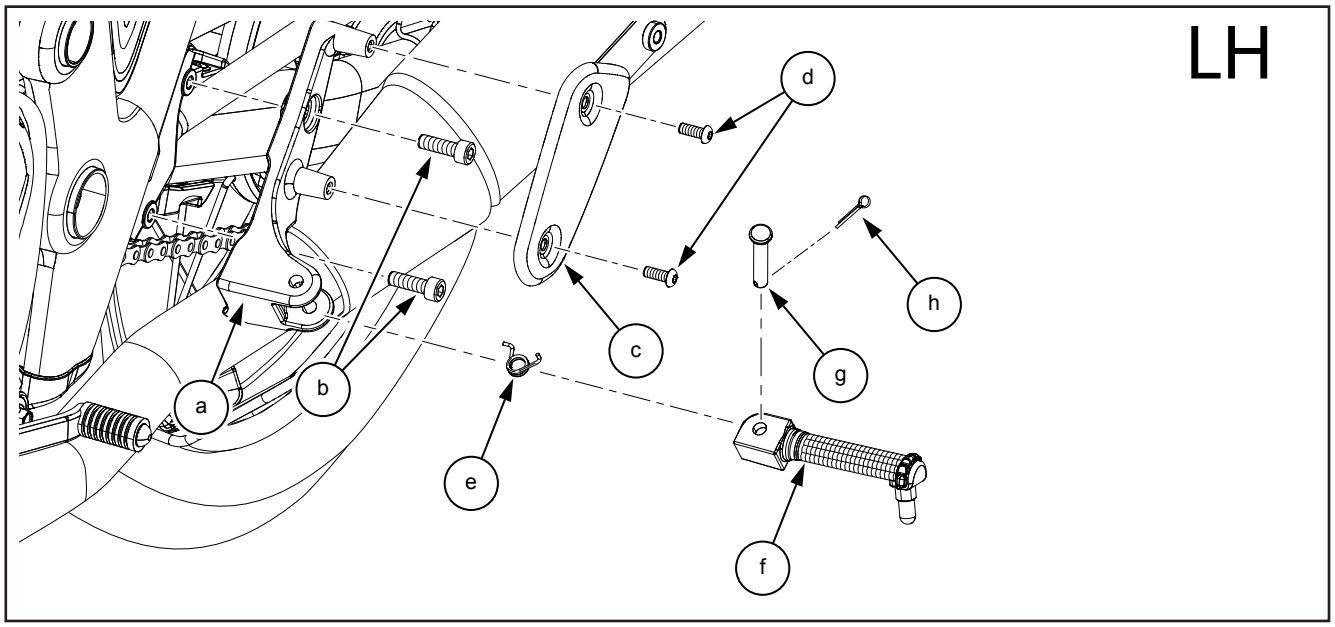

Item No.	Description	Quantity
a	Footrest Bracket	1
b	Hex Socket Head Screws (M6)	2
c	Heel Guard Rider LH	1
d	Hex Socket Head Screws (M4)	2
e	Spring - Rider Footrest LH	1
f	Footrest Rider LH	1
g	Clevis Pin Rider Footrest LH	1
h	Split Pin	1

Footrests - Pillion RH

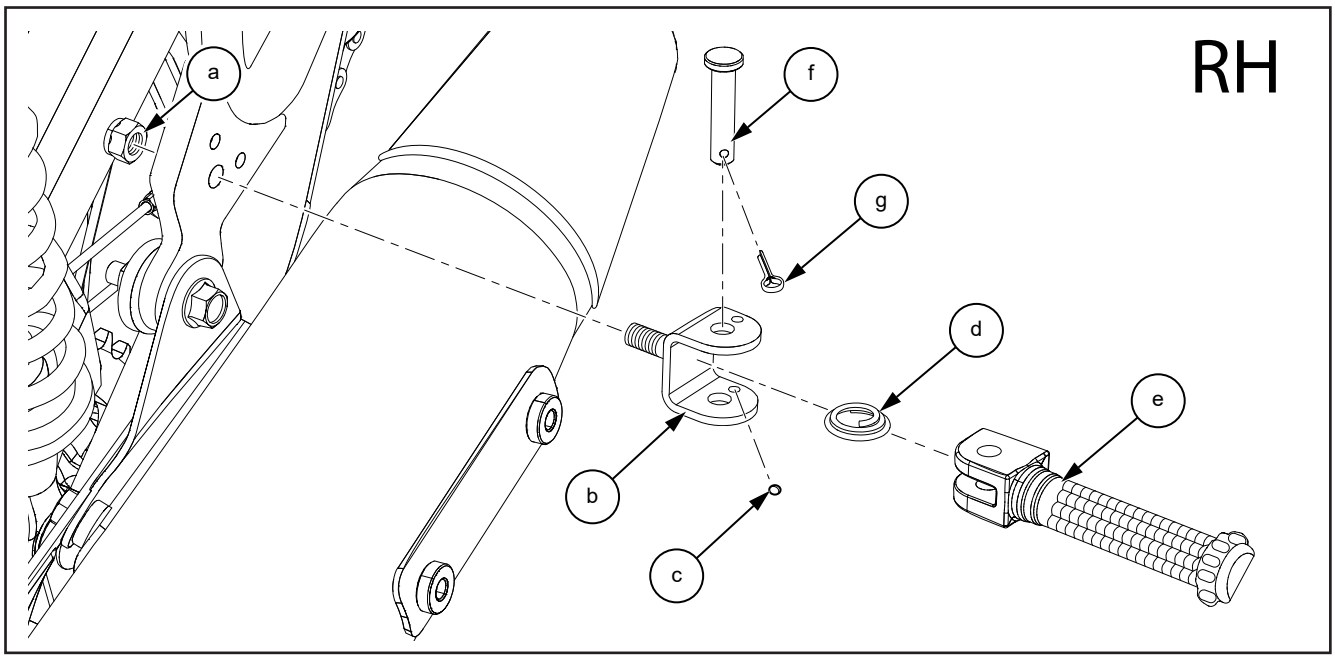

Item No.	Description	Quantity
a	Hexognal Nylock Nut (M8)	1
b	Bracket Comp - Pillion Footrest	1
c	Footrest Ball 3Mm Dia	1
d	Footrest Compression Spring	1
e	Foot Peg - RH	1
f	Lock Pin - Footrest	1
g	Split Pin	1

Footrests - Pillion LH

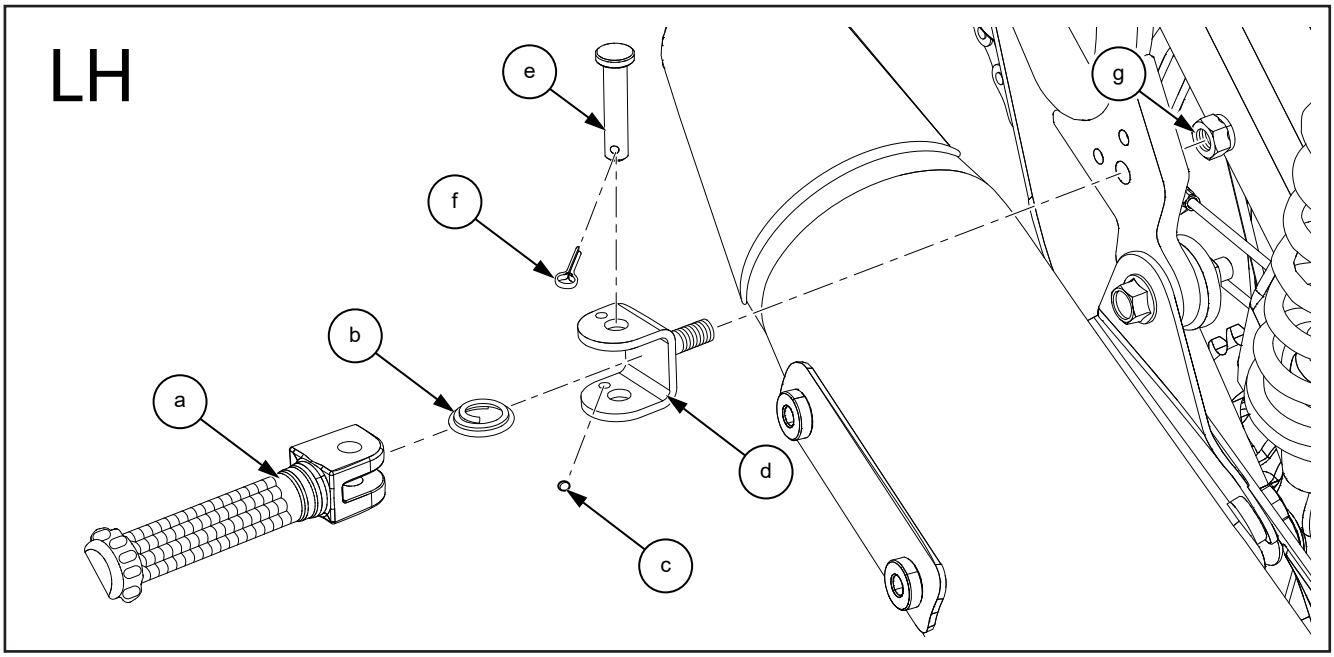

Item No.	Description	Quantity
a	Foot Peg - LH	1
b	Footrest Compression Spring	1
c	Footrest Ball 3Mm Dia	1
d	Bracket Comp - Pillion Footrest	1
e	Lock Pin - Footrest	1
f	Split Pin	1
g	Hexognal Nylock Nut (M8)/	1

Saree Guard (For Indian Market Only)

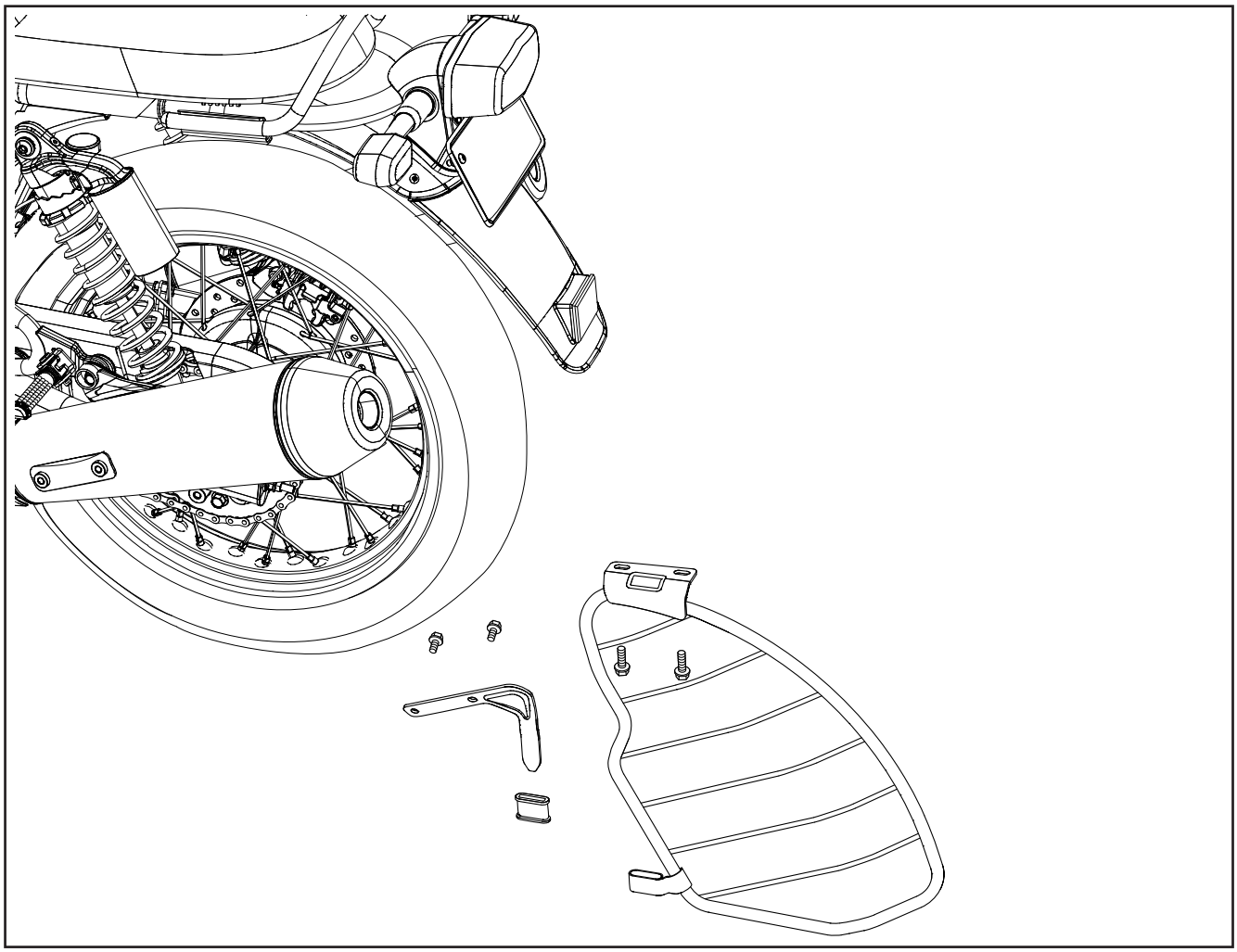

Item No.	Description	Quantity
a	Hex Socket Flange Head (M8)	2
b	Saree Guard	1
c	Hex Socket Flange Head (M8)	2
d	Bracket Saree Guard Bottom	1
e	Rubber Bush	1

Center Stand

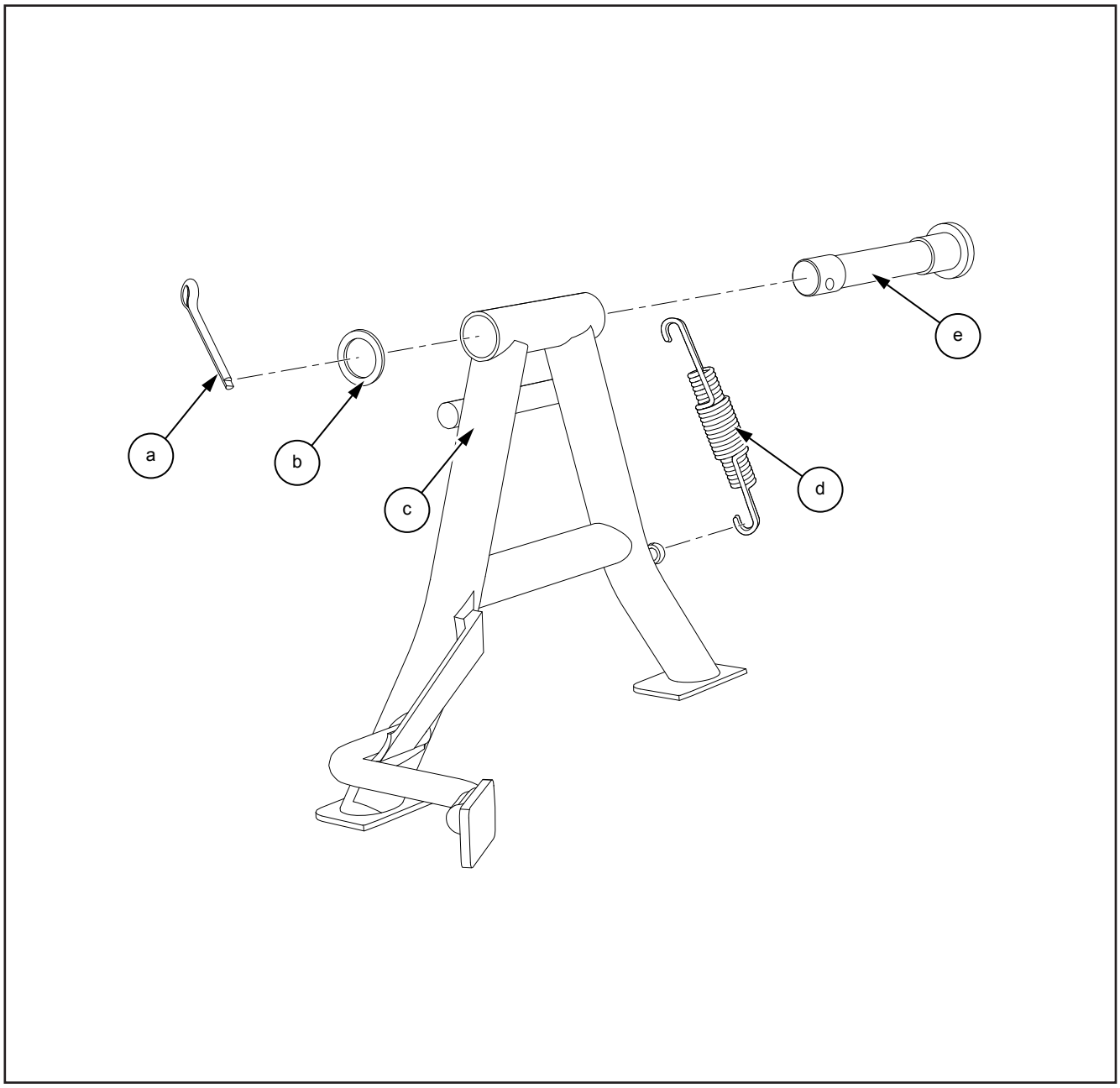

Item No.	Description	Quantity
a	Split Pin	1
b	Washer	1
c	Center Stand	1
d	Spring	1
e	Clevis Pin	1

Side Stand

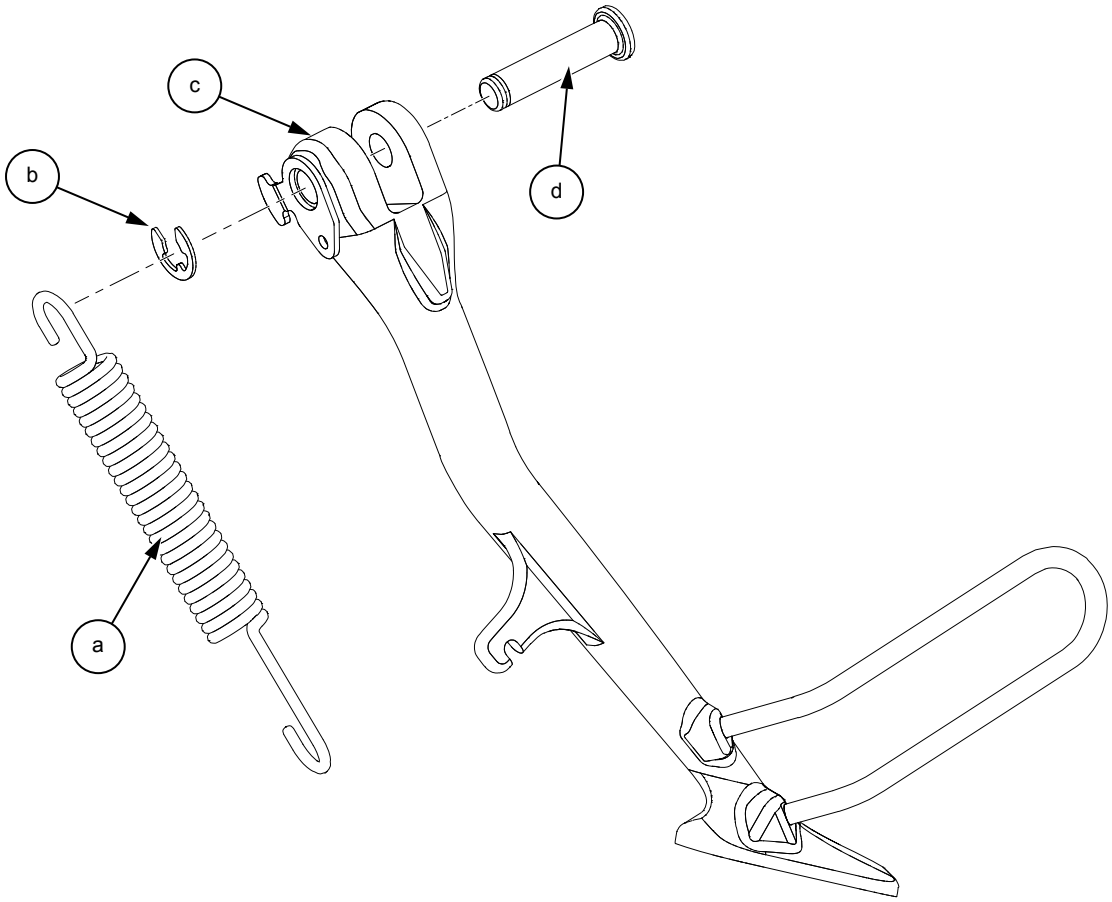

Item No.	Description	Quantity
a	Spring	1
b	E-Clip	1
c	Side Stand	1
d	Clevis Pin	1

6.5. Footrests/Stands/Saree Guard

⚠ CAUTION

Ensure the motorcycle is upright on a firm and flat surface.

Dismantling

6.5.1. Footrests LH and RH - Rider

- Straighten and remove split pin **(a)** from clevis pin bottom on rider footrest RH **(b)**.

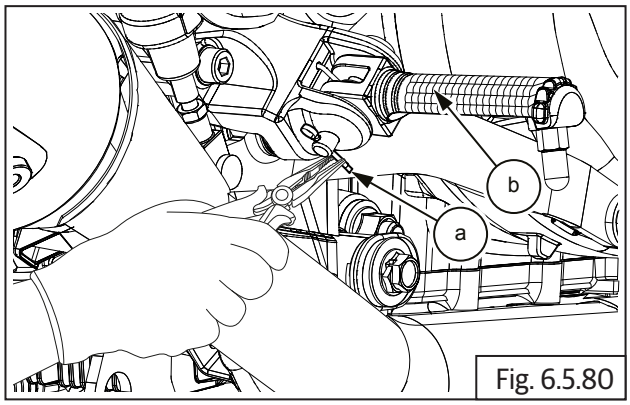

Fig. 6.5.80

	Nose plier

- Gently pull out clevis pin **(a)** from footrest housing top, duly supporting footrest **(b)**.

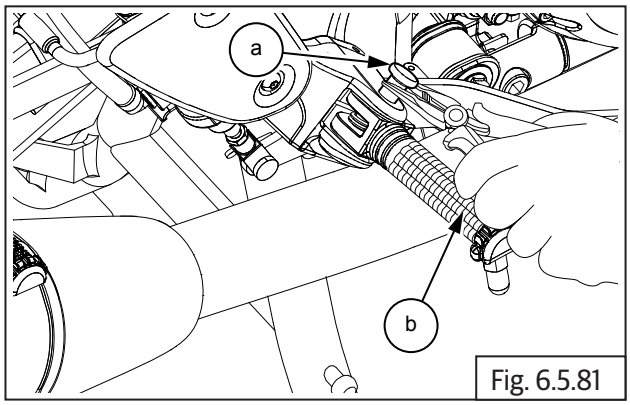

Fig. 6.5.81

	Nose plier

⚠ CAUTION

Spring is loaded. Support footrest while removing/reassembly

- Remove footrest with spring **(a)** from the housing **(b)**.

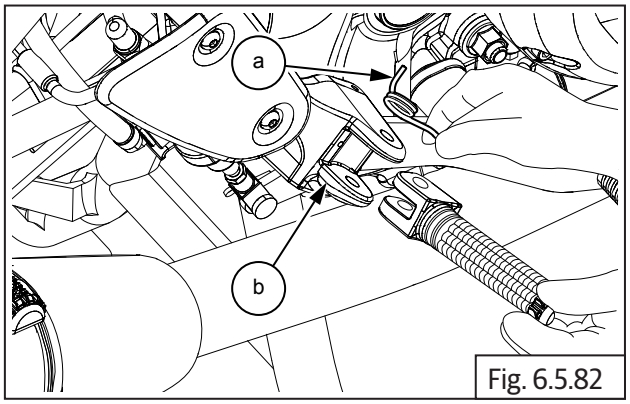

Fig. 6.5.82

6.5.2. Footrest Bracket RH - Rider

- Loosen and remove 2 Nos. Hex socket head screws **(M6) (a)** from Heel guard RH **(b)**.

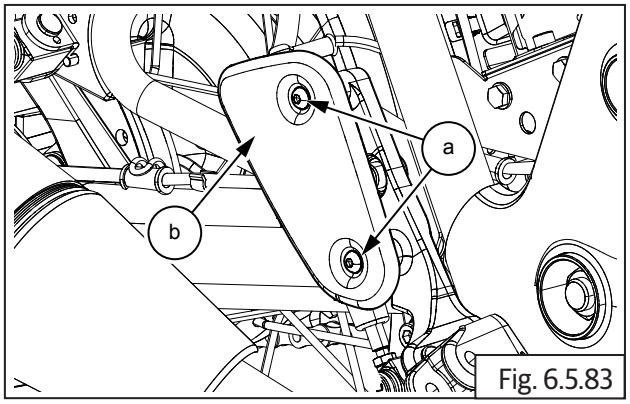

Fig. 6.5.83

	5 mm Allen key

- Loosen and remove 2 Nos. Hex socket head screws **(M6) (b)** holding master cylinder **(a)** on footrest bracket.

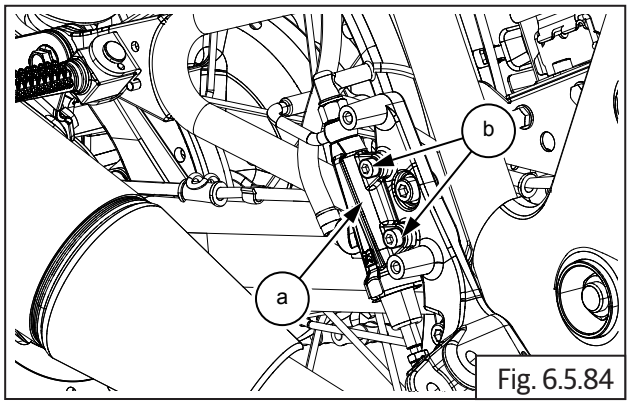

Fig. 6.5.84

	5 mm Allen key

- Support master cylinder carefully and release brake pedal spring **(a)** from footrest bracket **(b)**.

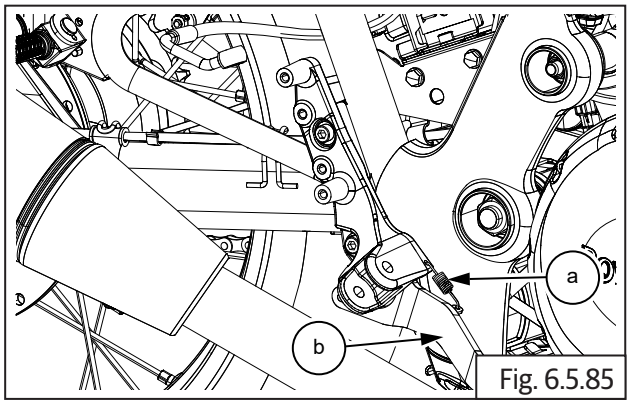

Fig. 6.5.85

	Nose plier

- Loosen and remove 2 Nos. Hex socket head screws **(M8) (a)** holding footrest bracket to frame, support footrest bracket suitably to loosen brake pedal mounting.

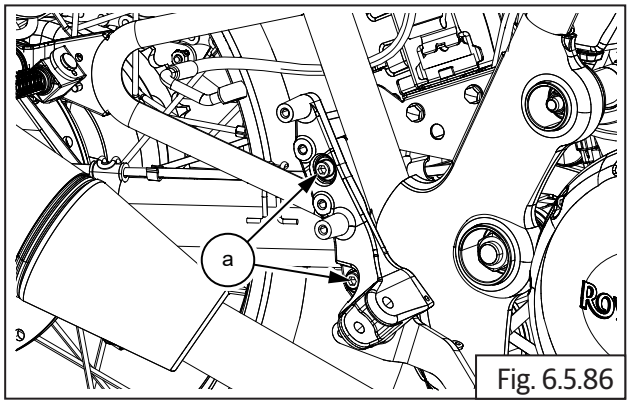

Fig. 6.5.86

	6 mm Allen key

- Loosen and remove Hex socket bolt **(M8) (a)** from inner side of bracket and remove brake pedal.

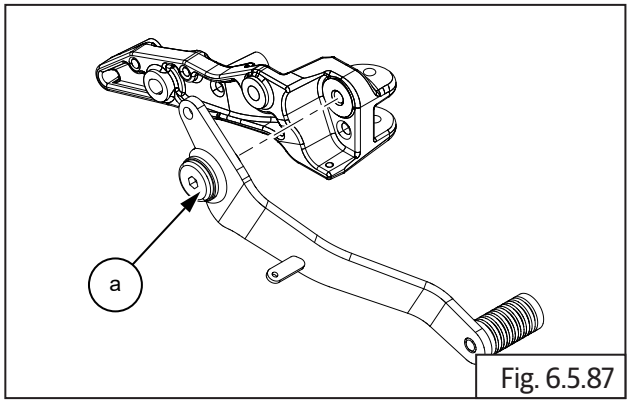

Fig. 6.5.87

	6 mm Allen socket with Ratchet

6.5.3. Footrest Bracket LH - Rider

- Loosen and remove 2 Nos. Hex socket head screws **(M6) (a)** from heel guard LH **(b)**.

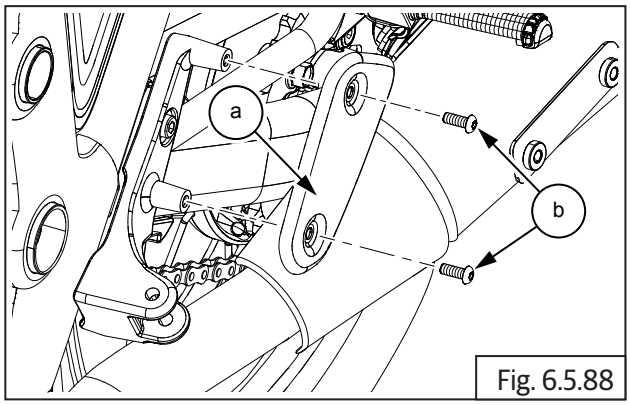

Fig. 6.5.88

	5 mm Socket with Ratchet

- Loosen and remove 2 Nos. Hex socket head screws **(M8) (b)** on footrest bracket **(a)**.

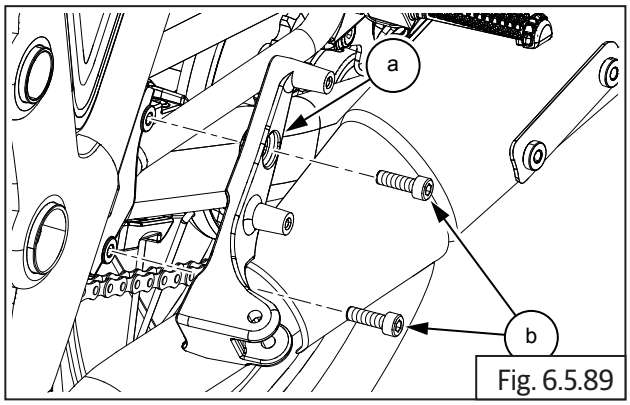

Fig. 6.5.89

	6 mm Socket with Ratchet

6.5.4. Footrests LH and RH - Pillion

- Straighten and remove split pin **(a)** fixed into clevis pin bottom.

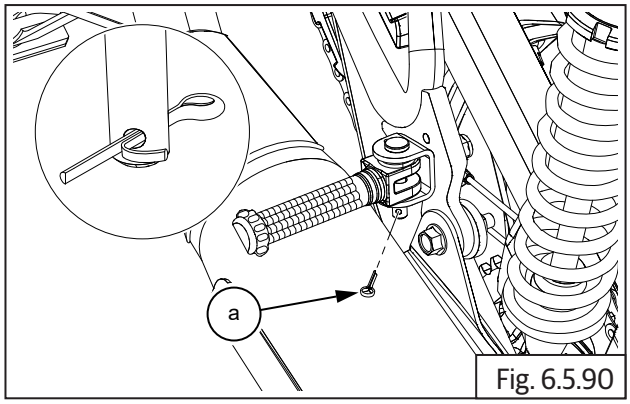

Fig. 6.5.90

	Nose plier

- Gently pull out clevis pin **(a)** from footrest housing top, duly supporting footrest **(b)**.

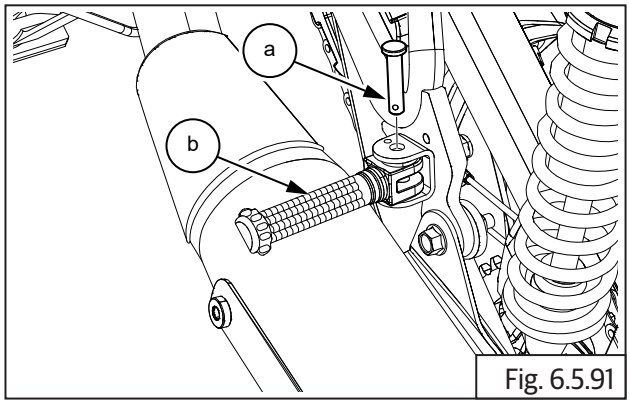

Fig. 6.5.91

	Nose plier

⚠ CAUTION

Ball and spring are loaded. Support footrest while removing/reassembly

- Remove footrest **(a)** from mounting bracket **(b)** carefully along with ball **(c)** and spring **(d)**.

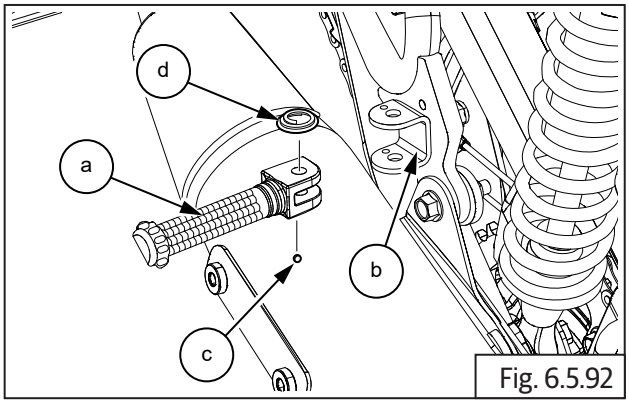

Fig. 6.5.92

6.5.5. Footrest Bracket LH and RH - Pillion

- Support pillion footrest bracket **(a)**, loosen and remove Hex nyloc nut **(M8) (b)** from inner side of frame.

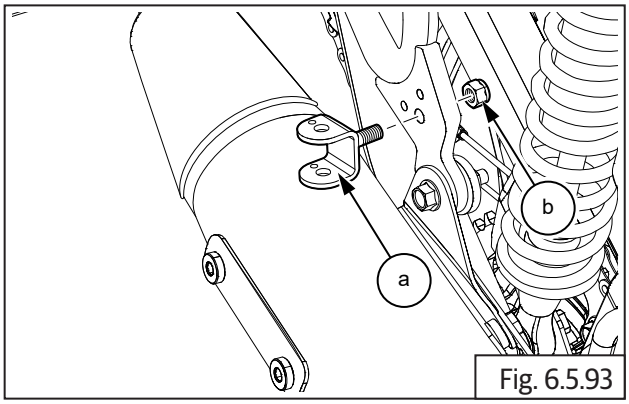

Fig. 6.5.93

	12 mm Socket with Ratchet

6.5.6. Saree Guard (For Indian Market Only)

- Loosen and remove 2 Nos. Hex flange head bolts **(M8) (a)** from frame and grab handle **(b)**.

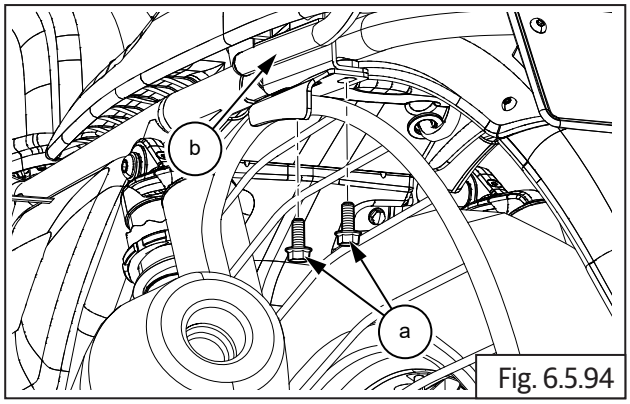

Fig. 6.5.94

	12 mm Socket with Ratchet

- Gently separate the saree guard **(a)** from bottom bracket **(b)**.

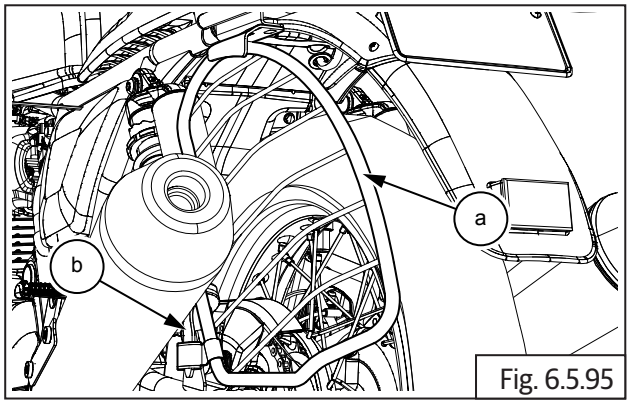

Fig. 6.5.95

- Loosen and remove 2 Nos. flange Hex bolts **(M8) (a)** from bottom bracket and silencer pipe on LH.

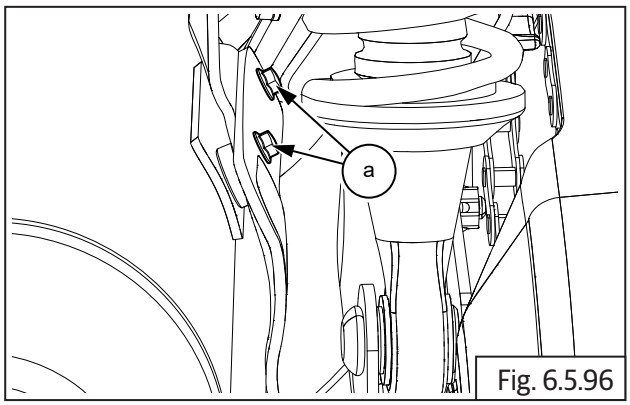

Fig. 6.5.96

	12 mm Socket with Ratchet

6.5.7. Side Stand

⚠ CAUTION

Ensure the motorcycle is upright on a firm and flat surface.

- Locate a scissor jack **(a)** under cradle frame **(b)** and lift motorcycle such that the wheel is off the ground.

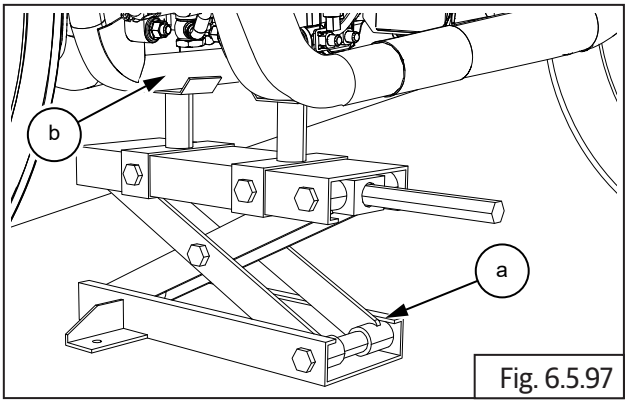

Fig. 6.5.97

- Remove spring **(a)** from side stand..

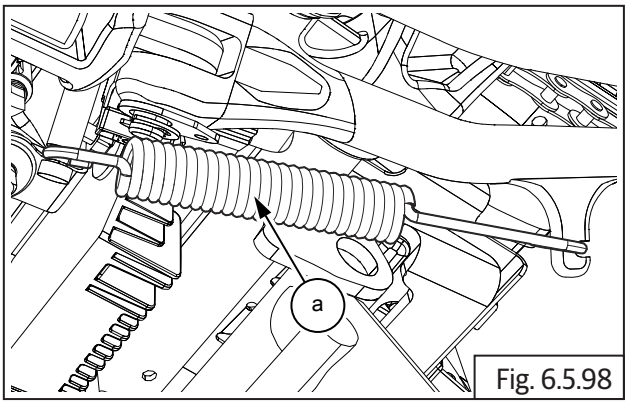

Fig. 6.5.98

	Phillips screwdriver

- Remove E-clip **(a)** from clevis.

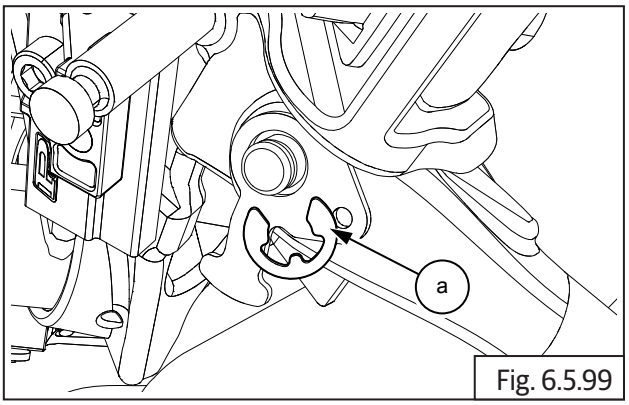

Fig. 6.5.99

	Nose plier

- Remove clevis pin **(a)** from side stand.

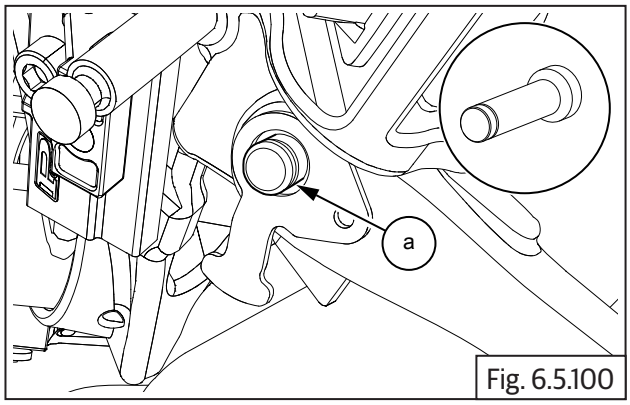

Fig. 6.5.100

- Remove side stand **(a)** from frame **(b)**.

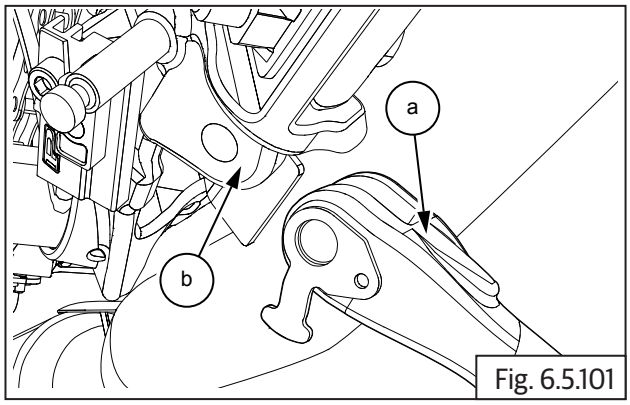

Fig. 6.5.101

6.5.8. Center Stand

⚠ CAUTION

Ensure the motorcycle is upright on a firm and flat surface.

- Locate a scissor jack **(a)** under cradle frame **(b)** and lift motorcycle such that the wheel is off the ground.

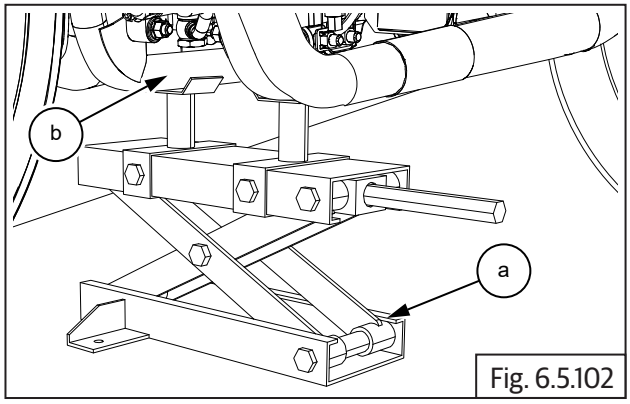

Fig. 6.5.102

- Remove spring **(a)** from center stand.

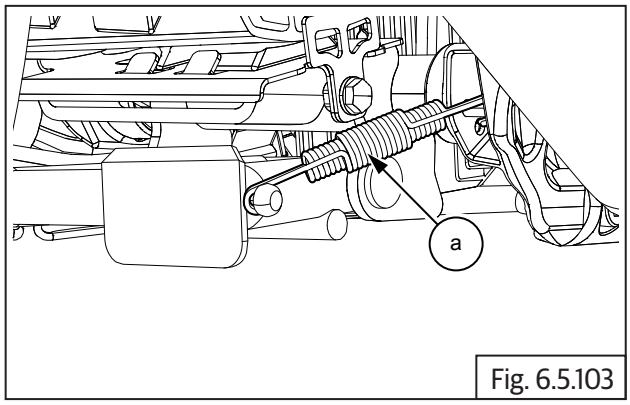

Fig. 6.5.103

	Phillips screwdriver

- Straighten and remove split pin **(a)** from clevis pin located on center stand **(b)**.

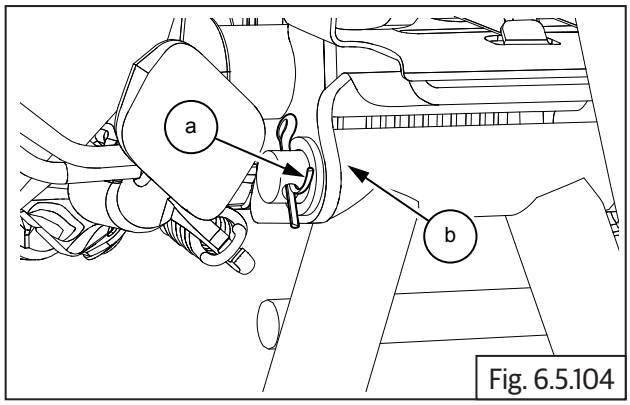

Fig. 6.5.104

	Nose plier

- Remove washer **(a)** from clevis pin **(b)**.

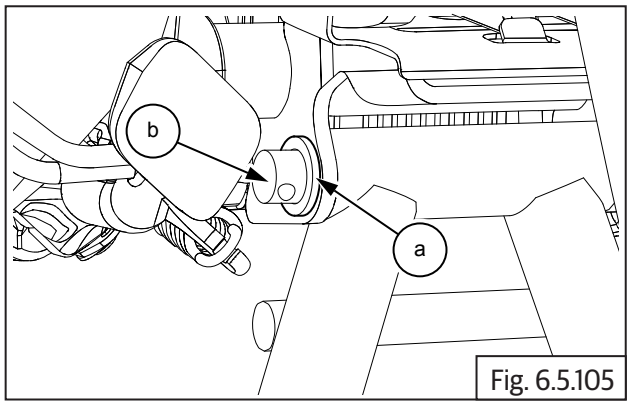

Fig. 6.5.105

- Gently tap from LH to remove clevis pin **(a)** from center stand.

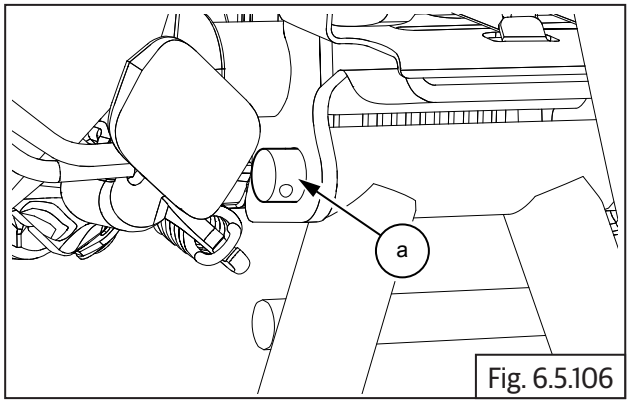

Fig. 6.5.106

	Mallet

- Remove clevis pin **(a)** from RH side to separate center stand from frame.

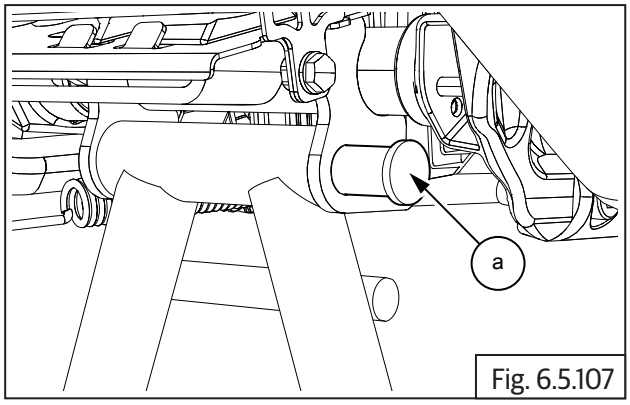

Fig. 6.5.107

- Remove center stand **(a)** from frame **(b)**.

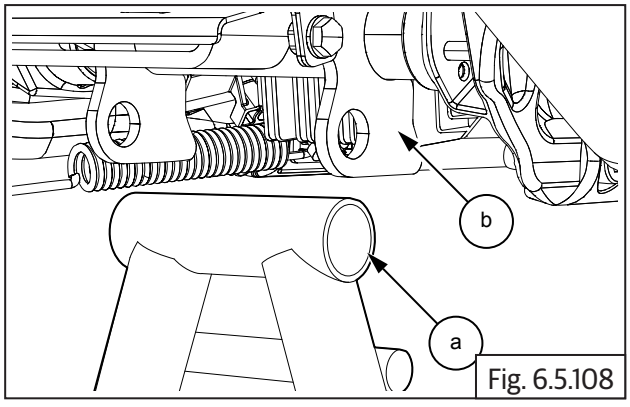

Fig. 6.5.108

Inspection

- Inspect footrests for any wear out, cracks, damages at the mounting area.
- Inspect clevis pin for any wear-out.
- Inspect springs for loss of tension and breakage.
- Inspect ball (only for pillion footrest) for uneven wear.
- Inspect rider footrest housing on frame for any cracks and damages.
- Inspect pillion footrest brackets for any cracks and damages.
- Inspect the center stand for rust formation, any bend or damage.
- Inspect side stand for any wear out, cracks, damages at the mounting area.
- Inspect saree guard for rust, cracks bends or damages.
- Inspect rubber bush for any cracks, cut or tear and wear.

Assembly

6.5.9. Center Stand

NOTE

- *Clean the clevis pin and ensure they are free of any dirt, grime,rust, etc and then lubricate the clevis pin.*

⚠ CAUTION

Ensure the motorcycle is upright on a firm and flat surface.

Ensure motorcycle is supported appropriately.

- Locate and support center stand in frame. Insert clevis pin **(a)** from RH side to assemble center stand to frame.

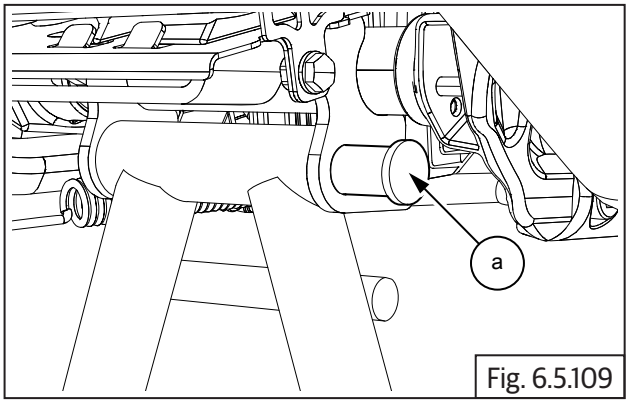

Fig. 6.5.109

- Install washer **(a)** into clevis pin **(b).**

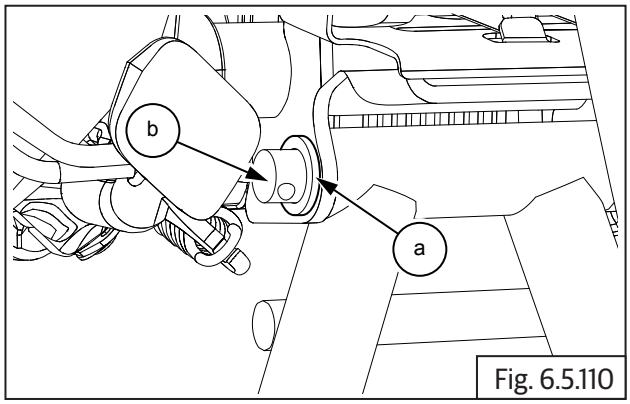

Fig. 6.5.110

- Install split pin **(a)** into clevis pin and split the outer end to install center stand **(b)**.

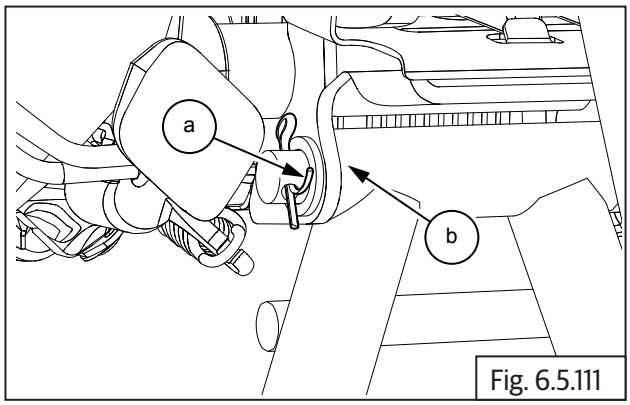

Fig. 6.5.111

	Nose plier

- Install spring **(a)** into center stand.

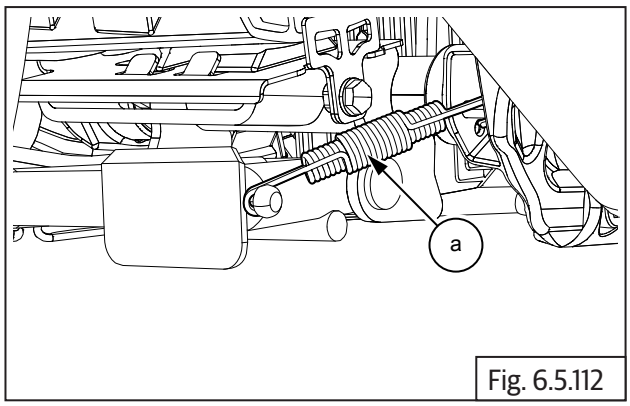

Fig. 6.5.112

	Phillips screwdriver

6.5.10. Side Stand

- Locate side stand **(a)** onto frame **(b)**.

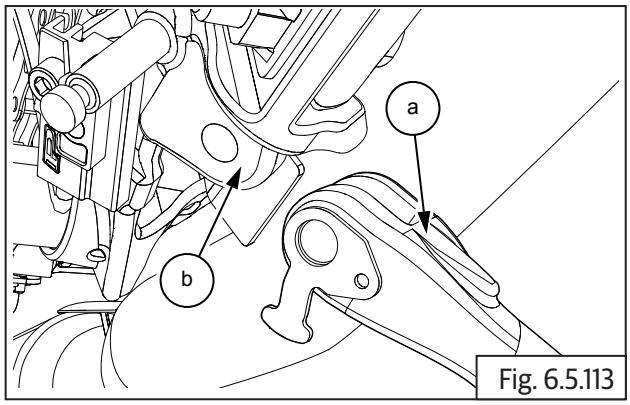

Fig. 6.5.113

- Insert clevis pin **(a)** into side stand.

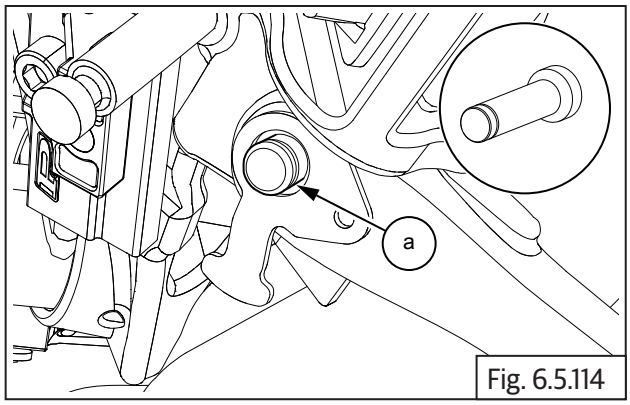

Fig. 6.5.114

- Install E-clip **(a)** into clevis pin.

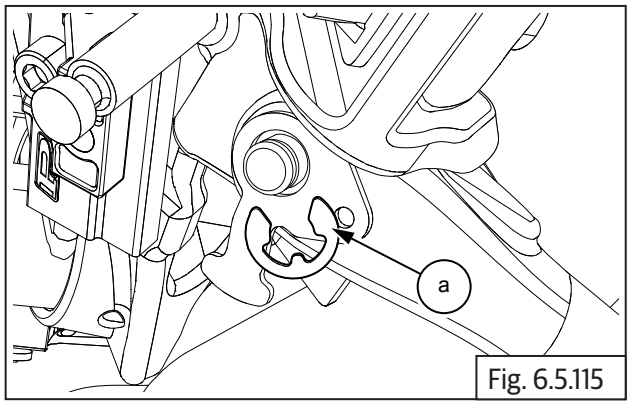

Fig. 6.5.115

	Nose plier

- Install spring **(a)** into side stand.

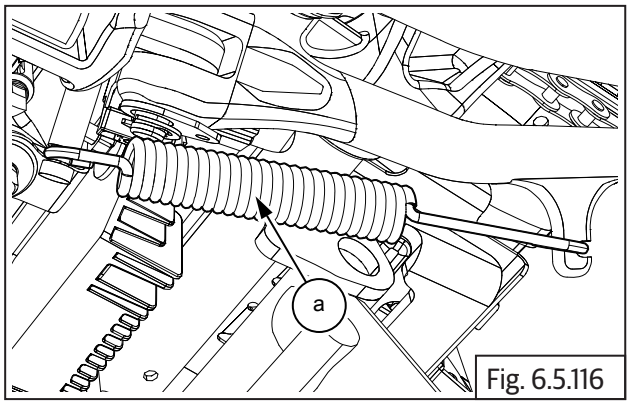

Fig. 6.5.116

	Phillips screwdriver

6.5.11. Saree Guard (For Indian Market Only)

- Locate and tighten 2 Nos. Hex flanged head bolts **(M8) (a)** into bottom bracket and silencer pipe on LH.

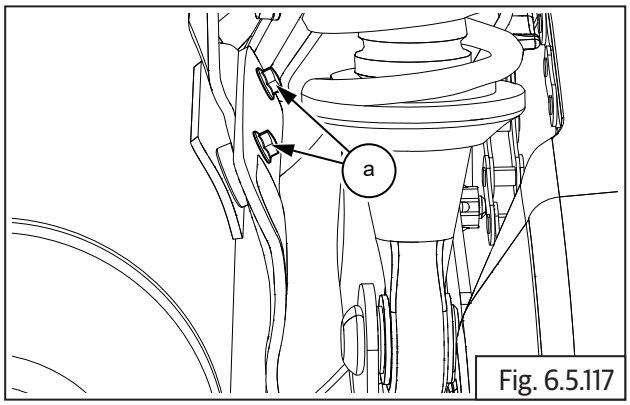

Fig. 6.5.117

	12 mm Socket with Ratchet

- Gently locate saree guard **(a)** into bottom bracket **(b)**.
- Ensure rubber bush is seated properly in bottom bracket**.**

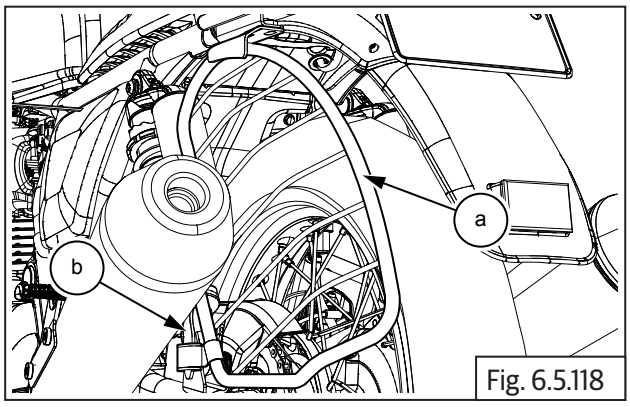

Fig. 6.5.118

- Locate and tighten 2 Nos. Hex flanged head bolts **(M8) (a)** into frame and grab handle **(b)**.

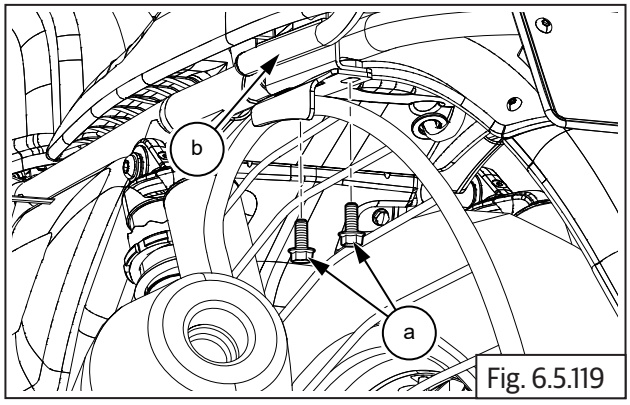

Fig. 6.5.119

	12 mm Socket with Ratchet
Torque	25 N-m/2.5 kgf-m

6.5.12. Footrest Bracket LH and RH - Pillion

- Position bracket against the frame such that the locking peg in the bracket **(a)** is located into the hole in frame. Assemble Hex nyloc Nut **(M8) (b)** from inner side of frame and tighten to specified torque.

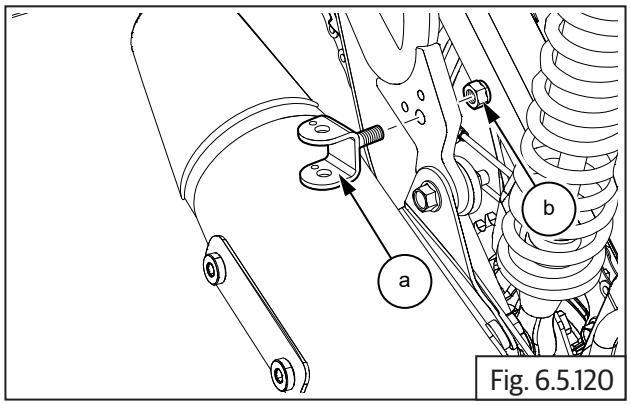

Fig. 6.5.120

	12 mm Socket with Ratchet

6.5.13. Footrests LH and RH - Pillion

- Apply grease on ball slightly and locate it on the hole in the bracket.
- Insert footrest **(a)** into mounting bracket **(b)** with the flat end facing down and taking care not to disturb the seating of ball **(c)**.

- Assemble spring **(d)** with its conical edge facing upwards within the bracket and footrest.

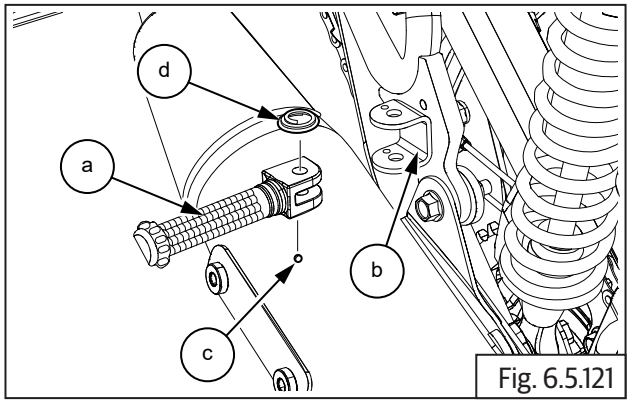

Fig. 6.5.121

- Insert clevis pin **(a)** from footrest housing top, duly supporting footrest **(b)**.

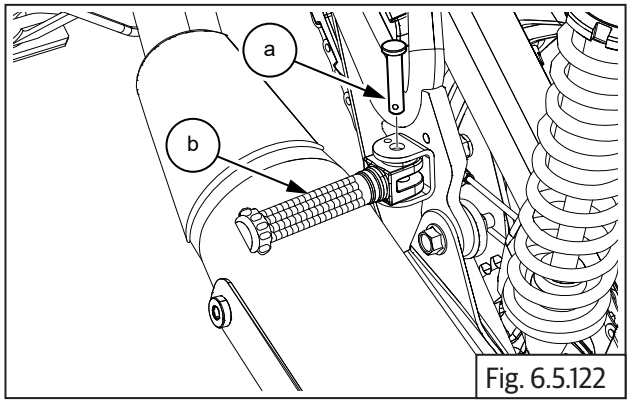

Fig. 6.5.122

	Nose plier

⚠ CAUTION

Support footrest carefully, since ball and spring loaded.

- Insert split pin **(a)** into clevis pin bottom and expand ends to lock.

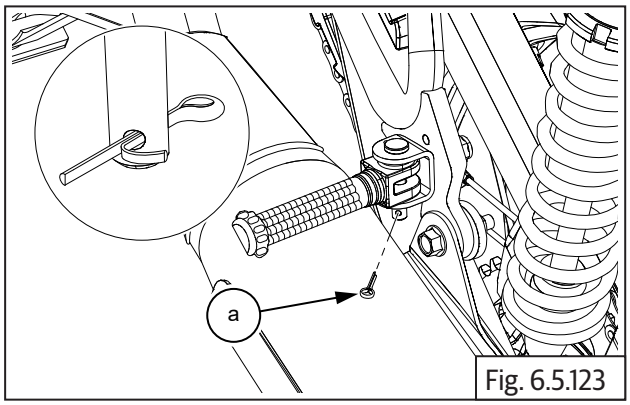

Fig. 6.5.123

	Nose plier

6.5.14. Footrest Bracket LH - Rider

- Locate footrest bracket LH **(a)** on frame, ensure mounting holes are aligned and tighten with 2 Nos. Hex socket head screws **(M8) (b)** to specified torque.

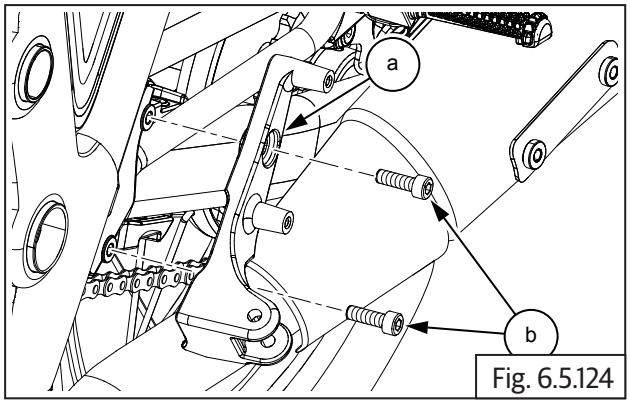

Fig. 6.5.124

	6 mm Socket with Ratchet
Torque	25 N-m/2.5 kgf-m

- Position heel guard LH **(a)** against bracket, align mounting holes and tighten with 2 Nos. Hex socket head screws **(M6) (b)** to specified torque.

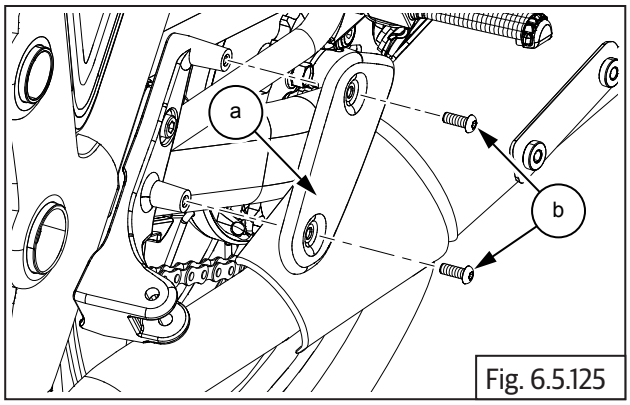

Fig. 6.5.125

	5 mm Socket with Ratchet
Torque	10 N-m/1.01 kgf-m

6.5.15. Footrest Bracket RH - Rider

- Gently hold footrest bracket and align mounting hole of brake pedal, insert hex socket bolt **(M8) (a)** on inner side of bracket and tighten to specified torque.

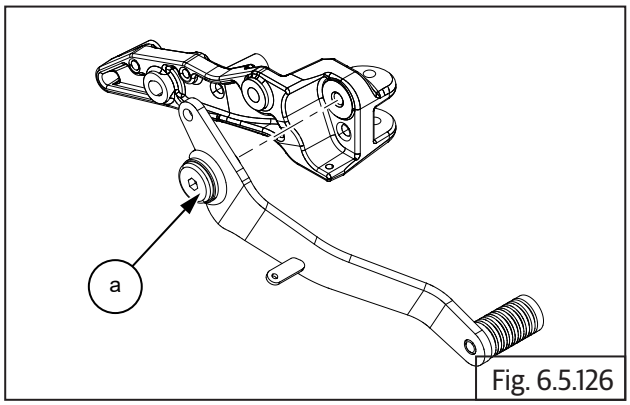

Fig. 6.5.126

	6 mm Socket with Ratchet
Torque	25 N-m/2.5 kgf-m

⚠ CAUTION

Ensure link rod to master cylinder does not get damaged.

Ensure free movement of brake pedal after tightening.

- Align bracket to mounting holes on frame RH, insert 2 Nos. Hex socket head screws **(M8) (a)** and tighten to specified torque.

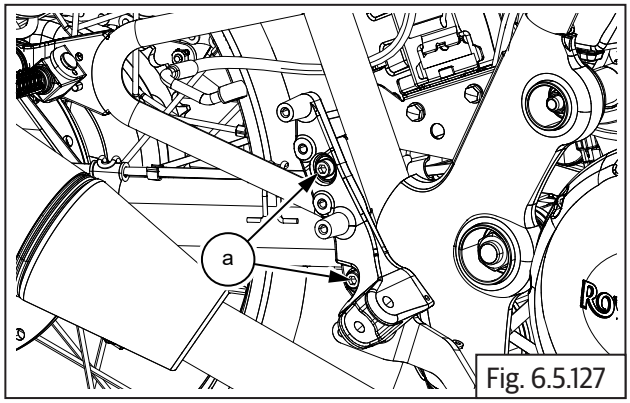

Fig. 6.5.127

	6 mm Socket with Ratchet
Torque	25 N-m/2.5 kgf-m

- Assemble spring **(a)** on footrest bracket **(b)** and brake pedal.

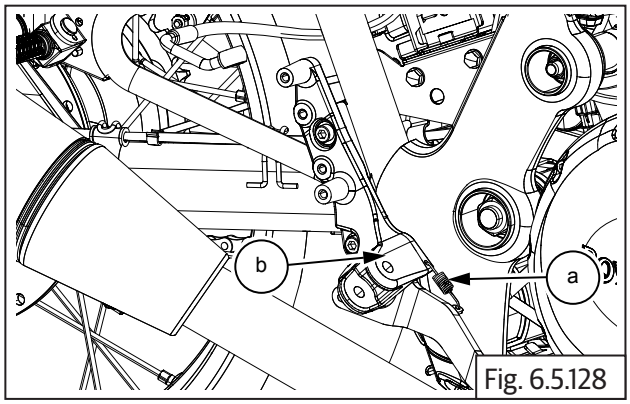

Fig. 6.5.128

	Nose plier

- Locate master cylinder on footrest bracket **(a)**, ensure mounting holes are aligned. Insert 2 Nos. Hex socket head screws **(M6) (b)** and tighten to specified torque.

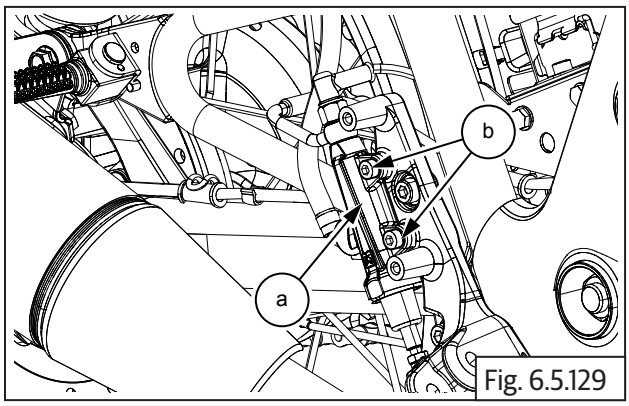

Fig. 6.5.129

	5 mm Socket with Ratchet
Torque	10 N-m/1.0 kgf-m

- Position heel guard RH **(a)** against bracket, align mounting holes and tighten with 2 Nos. Hex socket head screws **(M6) (b)** to specified torque.

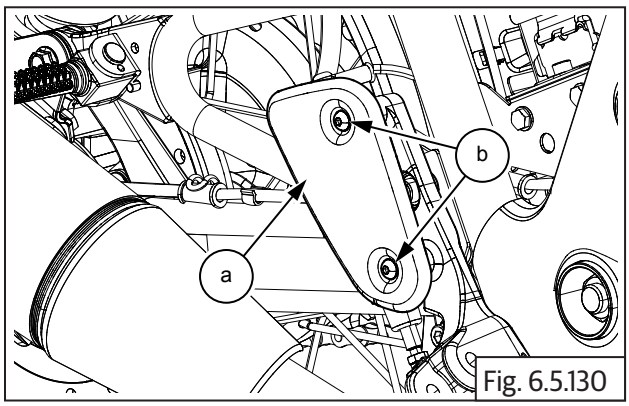

Fig. 6.5.130

	5 mm Socket with Ratchet
Torque	10 N-m/1.0 kgf-m

6.5.16. Footrests LH and RH - Rider

- Locate spring into slot in rider footrest such that eyelet is resting on top. Insert footrest with bracket, duly ensure the following:
  - The other end of the spring is located in hole in bracket.
  - The flat surface of the peg is facing down.
- Support footrest **(a)** and spring in bracket, slightly move footrest to align mounting holes.

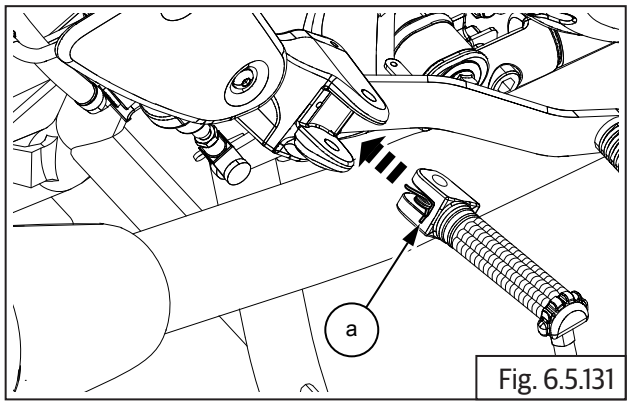

Fig. 6.5.131

- Insert clevis pin **(a)** through top hole in bracket **(b)**, slightly move spring to accommodate clevis pin and push clevis pin completely into the bracket.

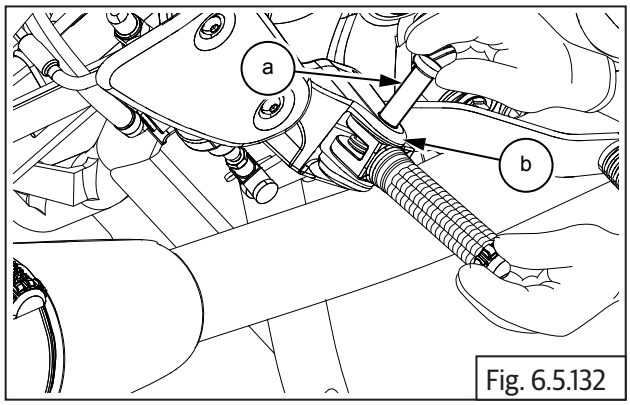

Fig. 6.5.132

- Insert split pin **(a)** into clevis pin **(b)** bottom and expand the ends to lock in place.

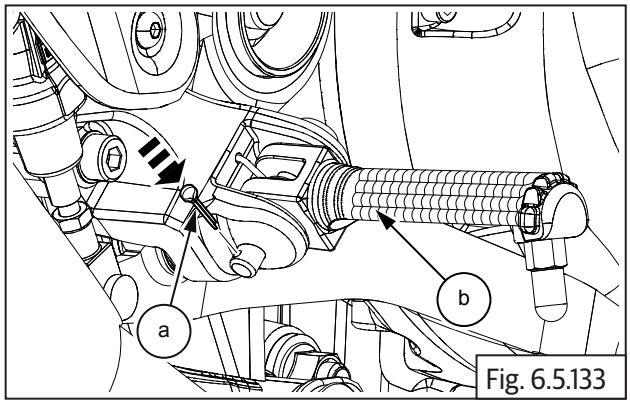

Fig. 6.5.133

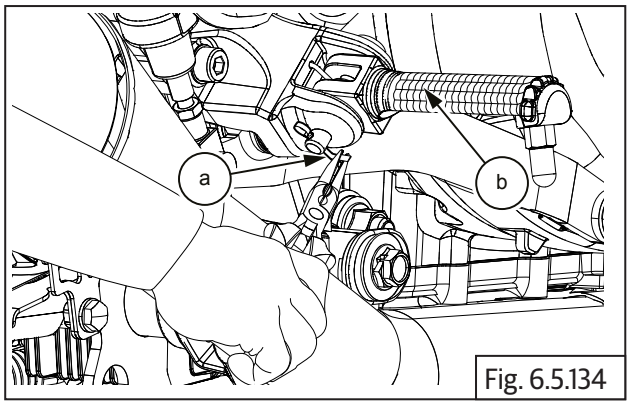

Fig. 6.5.134

	Nose plier

NOTE
• *After assembling rider footrests, ensure the brakes are functioning properly.*

MUDGUARDS/NUMBER PLATES/GRAB HANDLE

CONTENTS PAGE

6.6 Mudguards/Number Plates/Grab Handle 421

Dismantling 421

6.6.1. Front Number Plate (Only for India) 421

6.6.2. Front Mudguard 421

6.6.3. Rear Number Plate (Only for India) 422

6.6.4. Rear Number Plate Bracket 422

6.6.5. Reflector Rear 423

6.6.6. Rear Mudguard 423

6.6.7. Rear Mudguard Infill Cover 424

6.6.8. Grab Handle 425

Inspection 425

Assembly 425

6.6.9. Grab Handle 425

6.6.10. Rear Mudguard Infill Cover 426

6.6.11. Rear Mudguard 426

6.6.12. Reflector 427

6.6.13. Rear Number Plate Bracket 428

6.6.14. Rear Number Plate (Only for India) 428

6.6.15. Front Mudguard 429

6.6.16. Front Number Plate (Only for India) 429

Front Number Plate

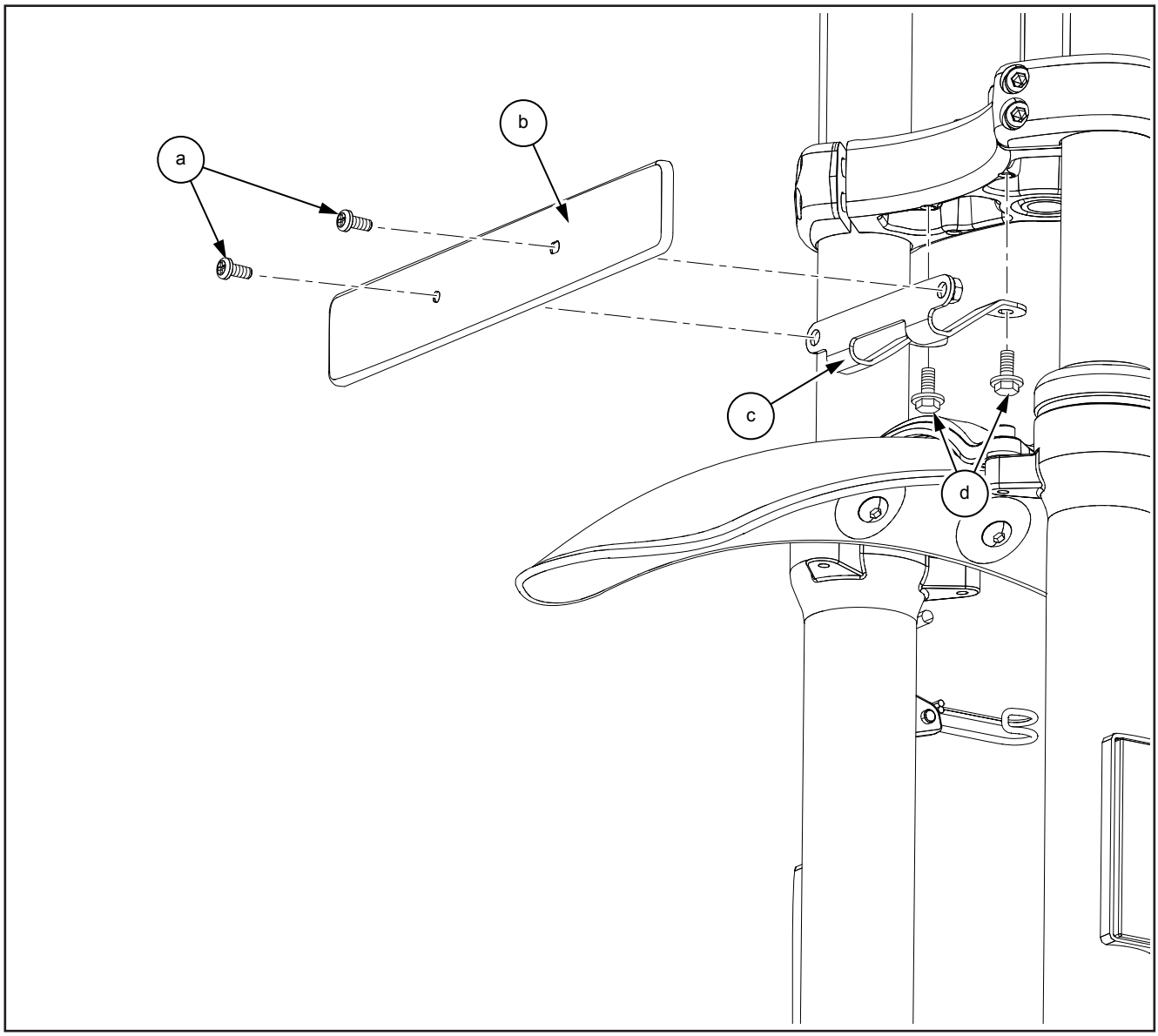

Item No.	Description	Quantity
a	Cross Recessed Pan Head Screw M5x0.8x12	2
b	Front Number Plate	1
c	Bracket, Front Number Plate	1
d	Hex Flange Bolt, M6x1x14	2

Front Mudguard

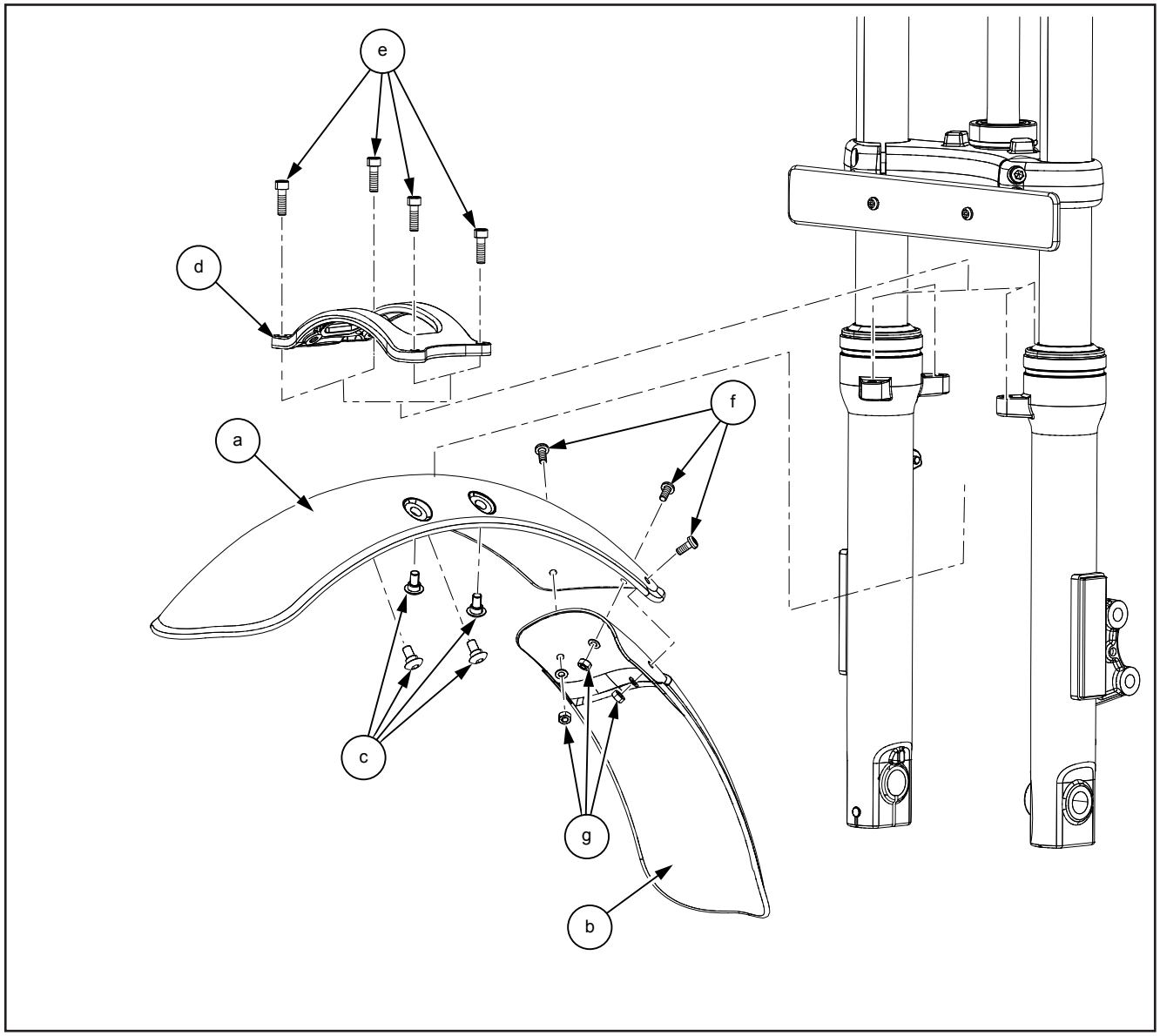

Item No.	Description	Quantity
a	Front Mudguard	1
b	Mudflap-Front	1
c	Hex. Socket Button Head Screws M6	4
d	Mudguard Fork Brace	2
e	Hex Socket Hd. Cap Screw, M6 X 20	4
f	Pan Head Screw	3
g	Hex Nut	3

Rear Number Plate

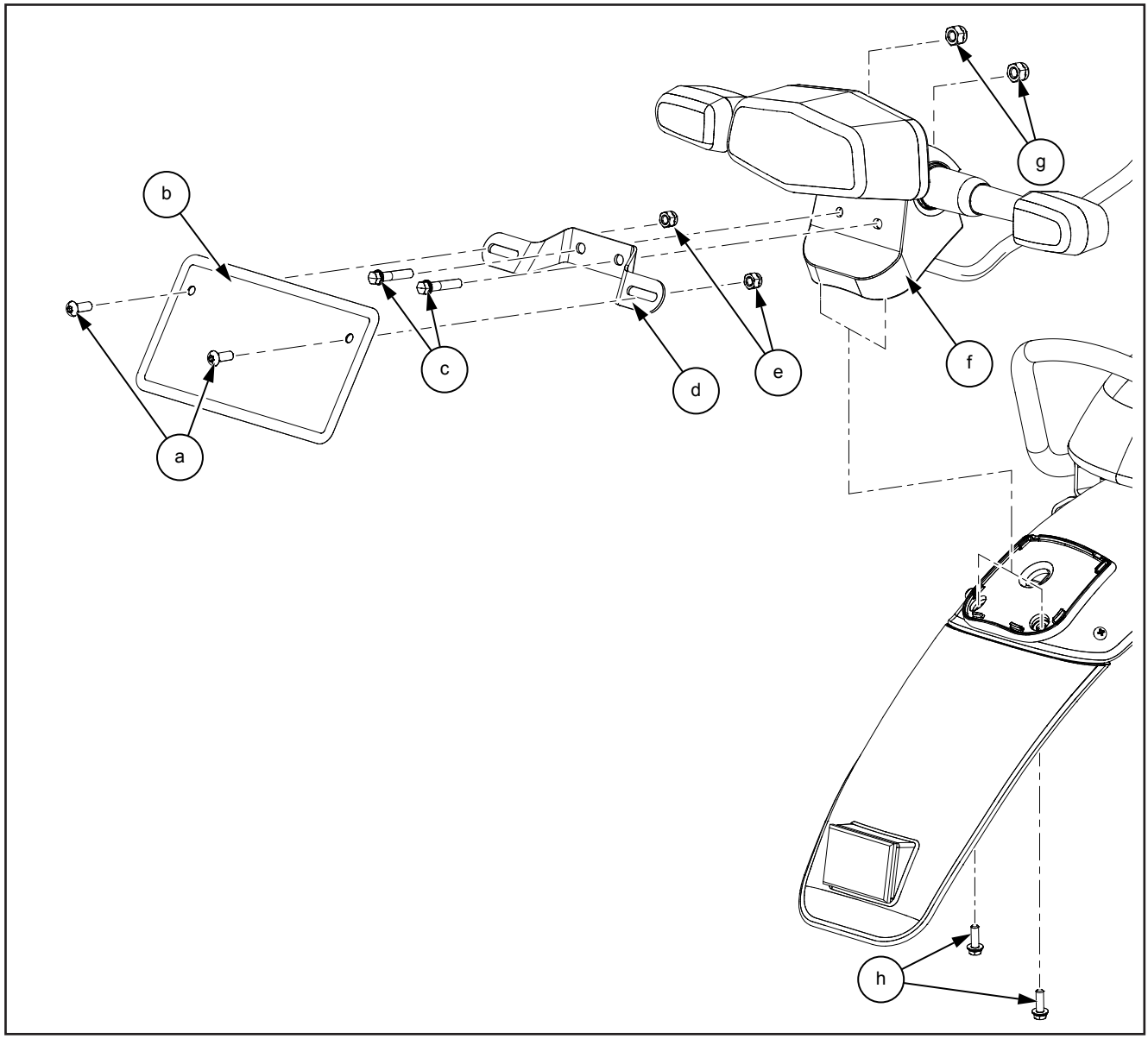

Item No.	Description	Quantity
a	Hex Socket Button Head Screw	2
b	Rear Number Plate	1
c	Flange Hexagonal Bolt M6x1x30	2
d	Bracket, Rear Number Plate	1
e	Hexagonal Nut M6x1x7	2
f	Rear Light Lamp Holder	1
g	Hexagonal Nut M6x1x7	1
h	Flange Hexagonal Bolt M6x1x20	2

Rear Mudguard/Reflector/Grab Handle

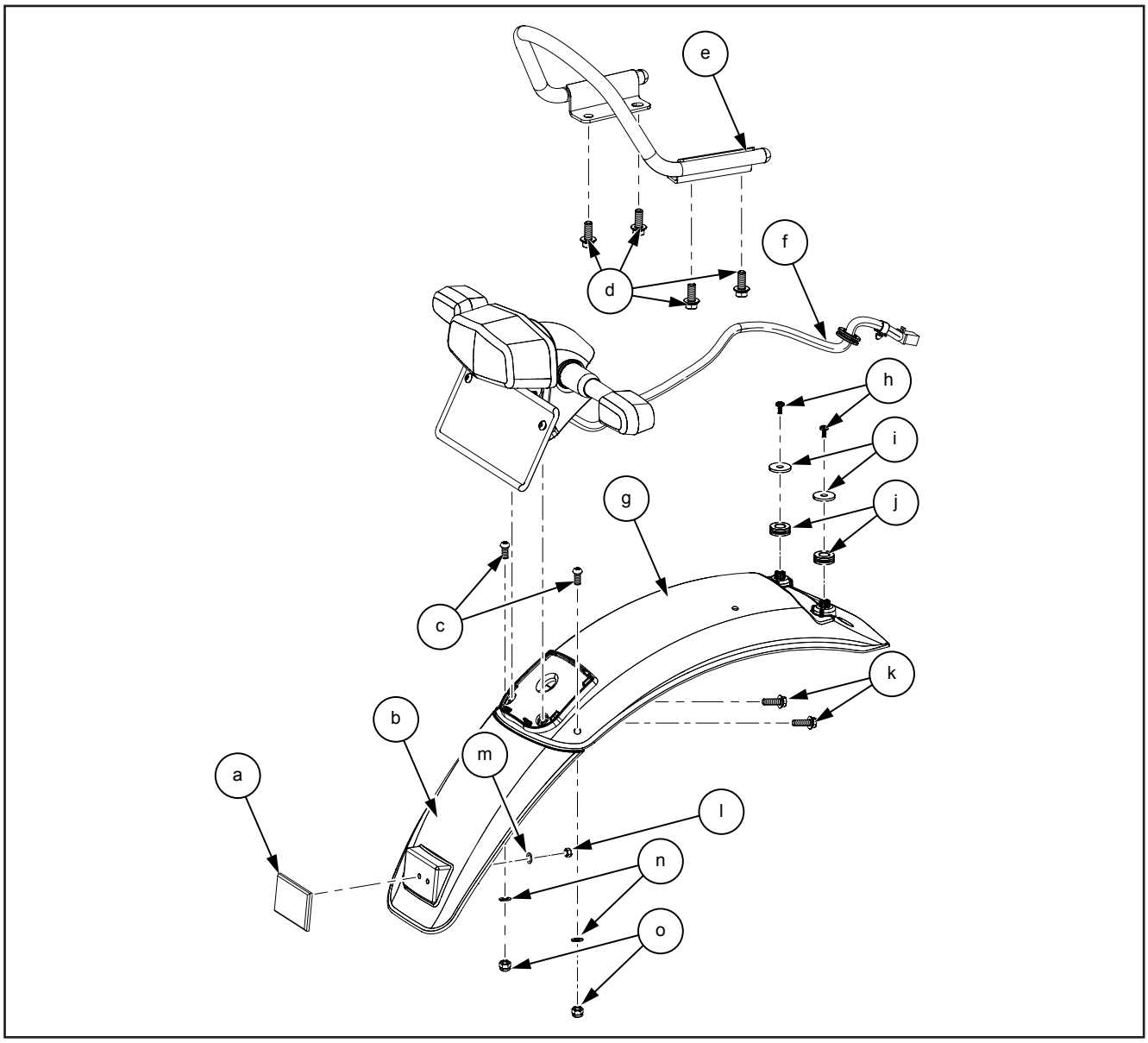

Item No.	Description	Quantity	Item No.	Description	Quantity
a	Reflector	1	g	Rear Mudguard Silver	1
b	Mudflap	1	h	Screw, Self Tapper, T20 Torx	2
c	Cross Recessed Pan Screw M6	2	i	Washer	2
d	Hex Flange Bolt M8x1.25x10	4	j	Grommet	2
e	Grab Handle	1	k	Flanged Hexoganal Bolt M6X1X20	2
f	Harness Tail Light	1			

6.6 Mudguards/Number Plates/Grab Handle

Dismantling

6.6.1. Front Number Plate (Only for India)

- Loosen and remove 2 Nos. Phillips head screws **(a)** holding number plate **(b)** from bracket.
- Remove number plate.

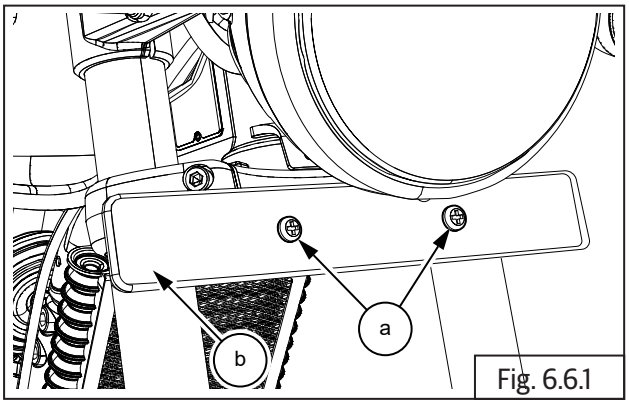

Fig. 6.6.1

	Phillips screw driver

- Loosen and remove 2 Nos. Hex flange bolts **(M6) (a)** holding number plate bracket from steering stem assembly **(b)**.

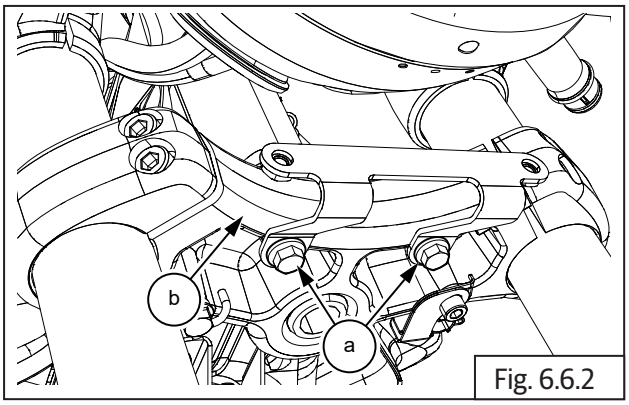

Fig. 6.6.2

	10 mm Socket with Ratchet.

6.6.2. Front Mudguard

- Loosen and remove 4 Nos. Hex flange bolts **(M6) (a)** from fork brace.

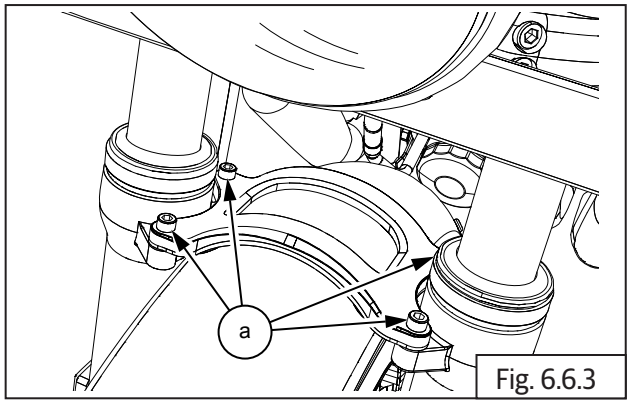

Fig. 6.6.3

	5 mm Allen socket with Ratchet

- Slightly lift mudguard **(a)** upwards, tilt it to one side and remove from fork ends.

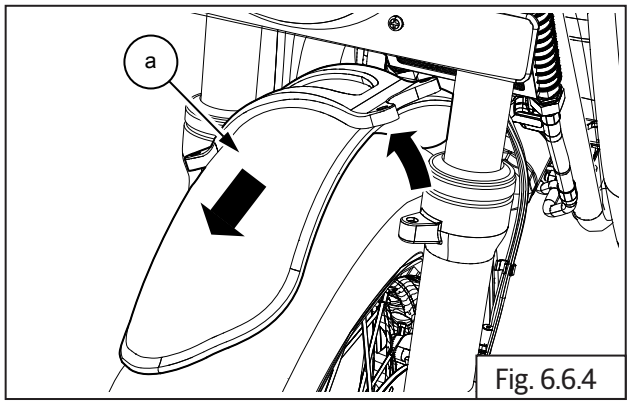

Fig. 6.6.4

- Loosen and remove 4 Nos. Hex socket button head screws **(M6) (a)** and separate fork brace from mudguard.

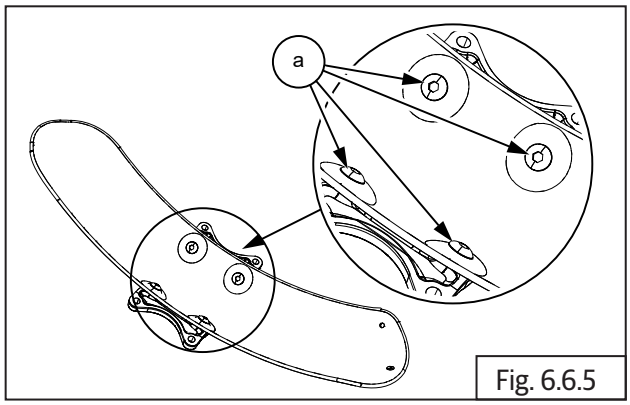

Fig. 6.6.5

	5 mm Allen socket with Ratchet

- Loosen and remove 3 Nos. Hex nuts **(M6) (a)** to separate mudflap from mudguard.

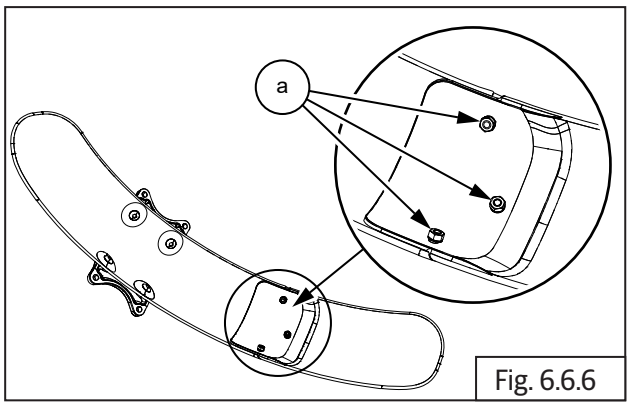

Fig. 6.6.6

	8 mm Socket with Ratchet

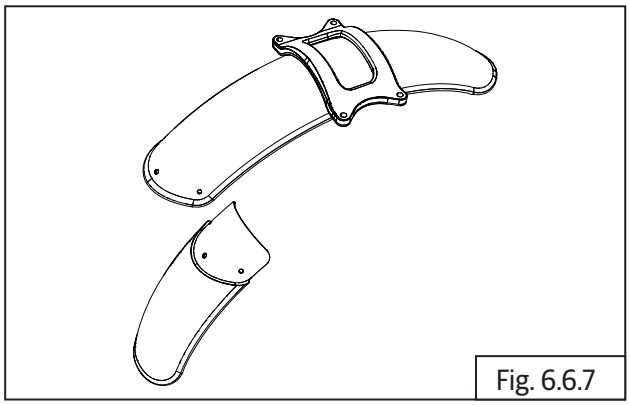
Fig. 6.6.7

6.6.3. Rear Number Plate (Only for India)

- Hold pan head screw **(M5) (a)** and remove Hex nut **(M6) (b)** (located behind rear number plate bracket) along with washer.

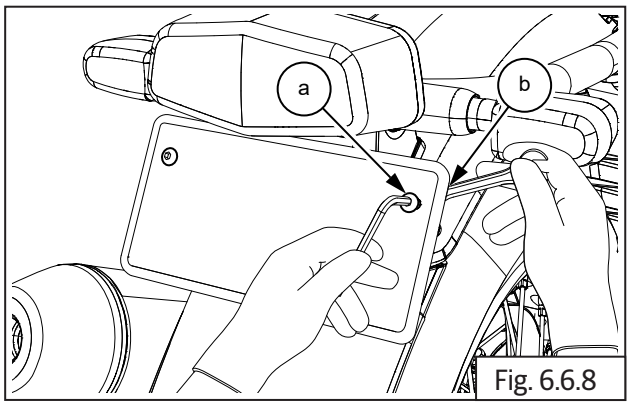

Fig. 6.6.8

	5 mm Allen key and 10 mm Double end spanner

- Repeat above procedure for pan head screw **(a)** and Hex nut **(b)** on other side of number plate.

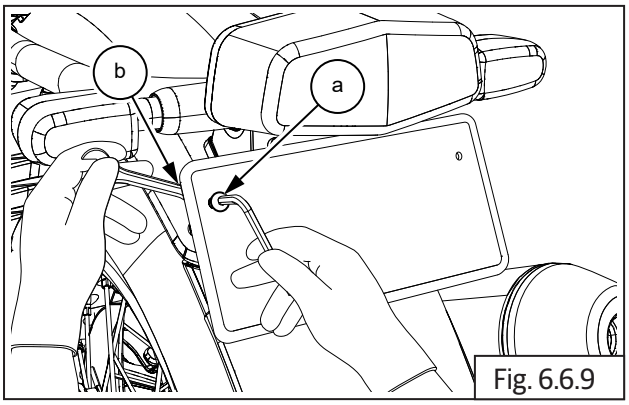

Fig. 6.6.9

	5 mm Allen key and 10 mm Double end spanner

- Support number plate suitably while removing screws.

6.6.4. Rear Number Plate Bracket

- Remove rear mudguard (section 6.6.6).
- Hold Hex nut **(M6) (a)** inside tail lamp bracket **(b)**.

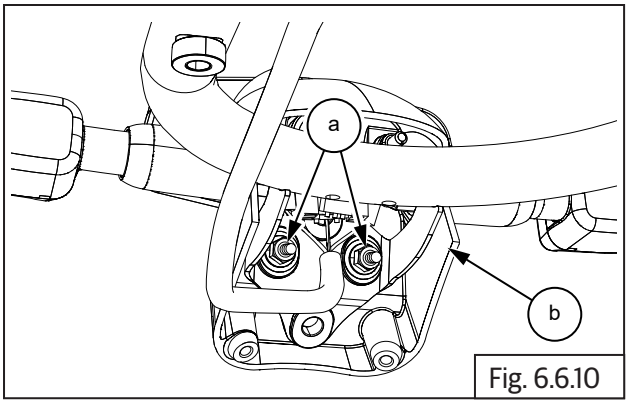

Fig. 6.6.10

	10 mm Socket with Ratchet

- Loosen 2 Nos. Hex flange head bolts **(M6) (a)** on number plate bracket **(b)**.
- Support the bracket while removing the bolts.

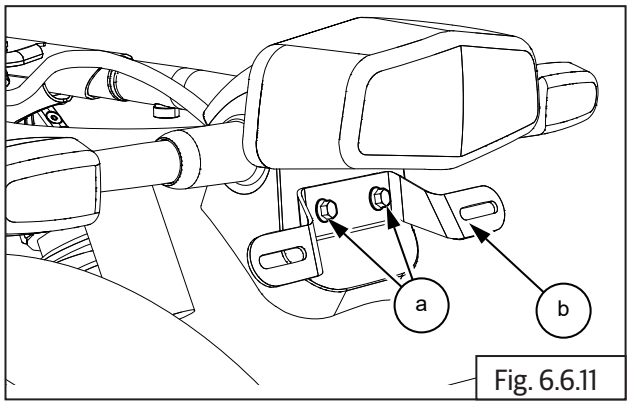

Fig. 6.6.11

	10 mm Ring spanner

6.6.5. Reflector Rear

- Loosen and remove Hex nut **(M4) (a)** along with washer from rear mudguard bottom **(b)** to remove rear reflector **(c)**.

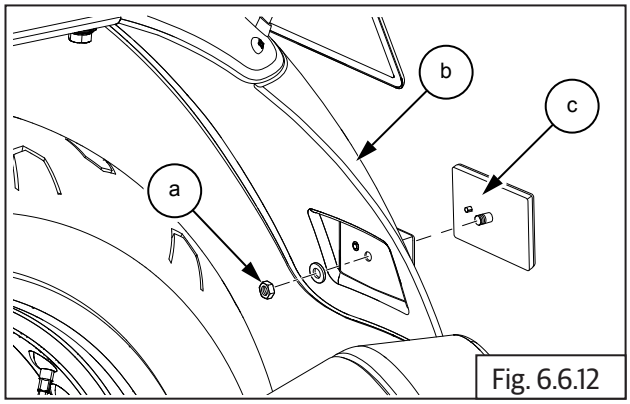

Fig. 6.6.12

	6 mm Socket with Ratchet

6.6.6. Rear Mudguard

- Remove the following:
  - Side panel RH (section 6.7.1).
  - Rider seat (section 6.7.2).
- Hold Phillips screw **(a)**, loosen and remove 2 Nos. Hex nuts **(M6) (b)** to remove mudflap from rear mudguard.

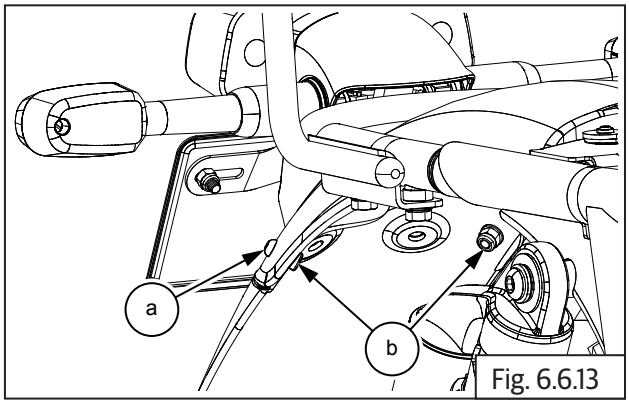

Fig. 6.6.13

	Phillips screw driver and 10 mm Socket with Ratchet

- Remove rear mudflap **(a)** from rear mudguard **(b)**.

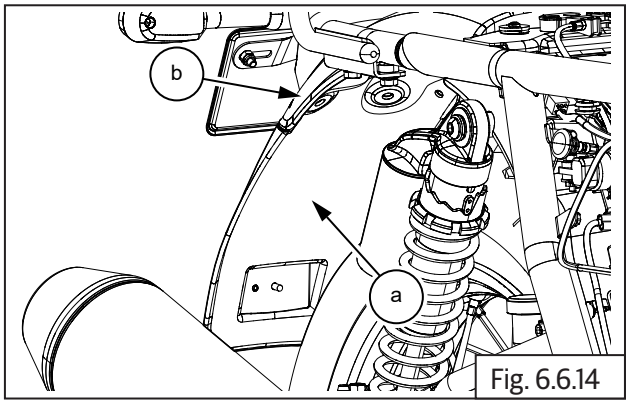

Fig. 6.6.14

- Loosen and remove 2 Nos. Hex flange bolts **(M6) (a)** from inner side of rear mudguard.

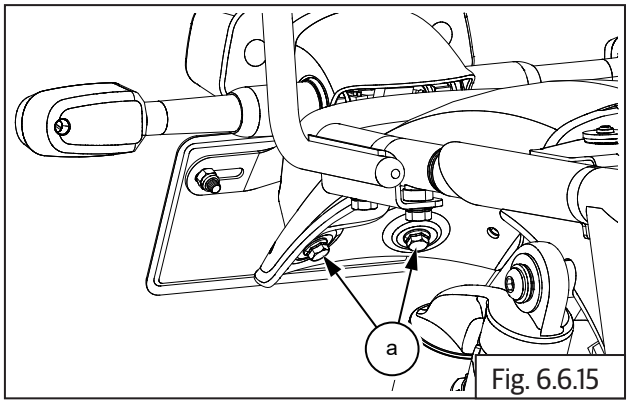

Fig. 6.6.15

	10 mm Socket with Ratchet

- Disconnect tail lamp and trafficator connectors **(a)** from wiring harness located behind tail lamp assembly.

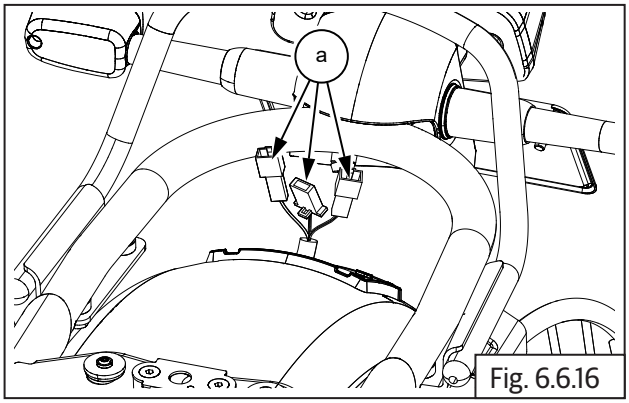

Fig. 6.6.16

- Disconnect rear harness **(a)** from main wiring harness.

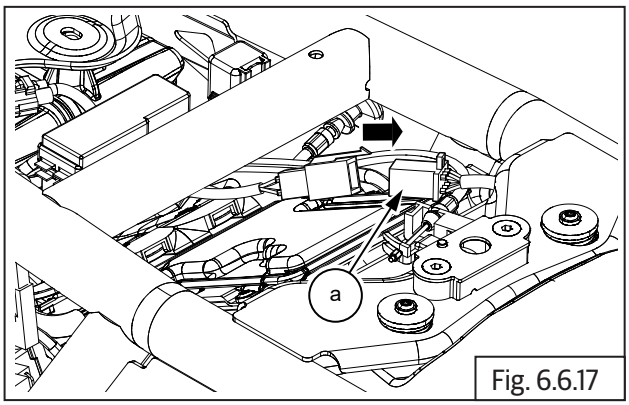

Fig. 6.6.17

- Loosen and remove 2 Nos. self-tapper screws **(T20) (a)** along with washers from frame behind engine control unit (ECU) **(b)**.

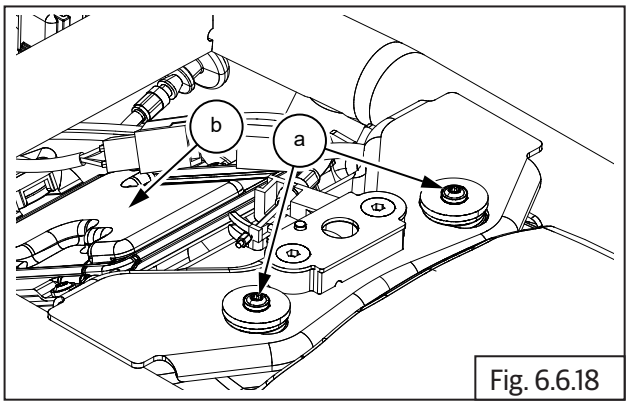

Fig. 6.6.18

	T20 Torx socket with Ratchet

- Remove rear mudguard **(a)** from frame.

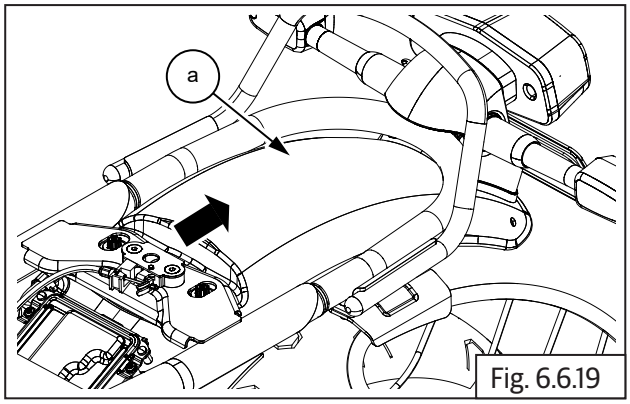

Fig. 6.6.19

- Remove tail lamp wiring harness **(a)** from rear mudguard **(b)**.

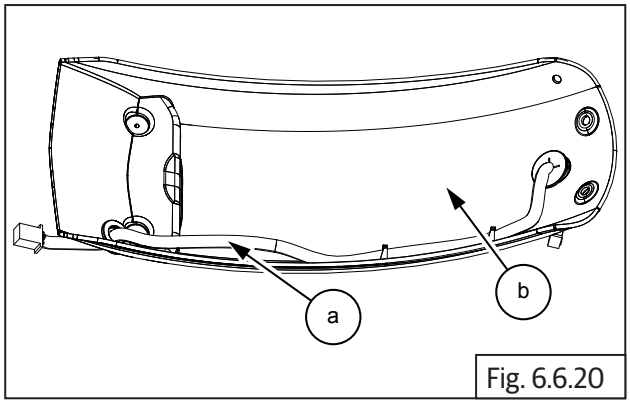

Fig. 6.6.20

6.6.7. Rear Mudguard Infill Cover

- Remove the following parts:
  - Side panel RH (section 6.7.1).
  - Rider seat (section 6.7.2).
  - Rear wheel (section 6.8.3).
  - Engine control unit (ECU) (section 10.1.1).

⚠ CAUTION

Before disconnecting ECU from the wiring harness, the battery terminals must be disconnected from the battery.

  - Roll over sensor (section 10.1.12).

- Loosen and remove 5 Nos. Hex socket head bolts **(M6) (a)** and remove the rear mudguard infill cover.

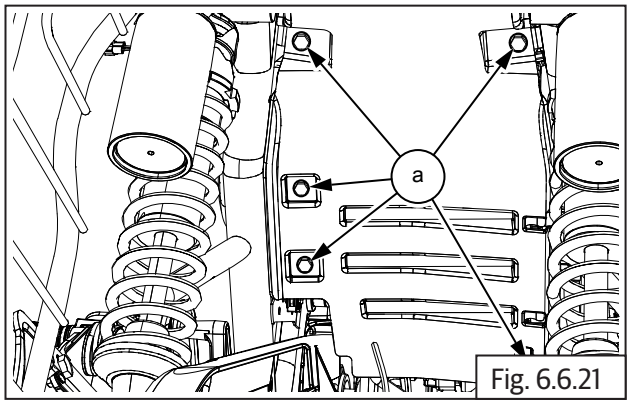

Fig. 6.6.21

	10 mm Socket with Ratchet

CAUTION

For Interceptor models: Support the rear brake master cylinder reservoir along with clamp carefully while removing Hex socket bolt at the bottom RH side of the mudguard infill cover.

6.6.8. Grab Handle

- Remove side panel RH (section 6.7.1).
- Remove rider seat (section 6.7.2).
- Loosen and remove 2 Nos. Hex flange bolts **(M8) (a)** RH from frame.

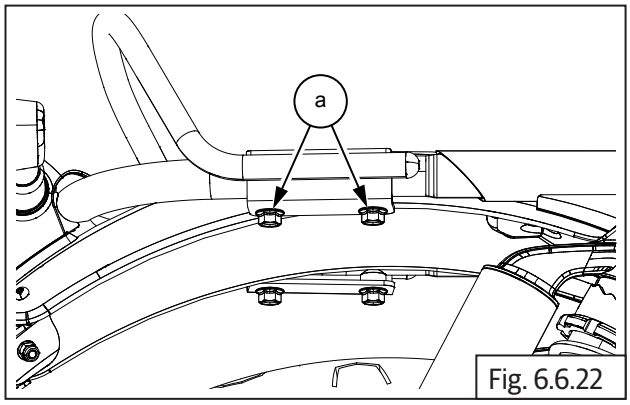

Fig. 6.6.22

	12 mm Socket with Ratchet

- Loosen and remove 2 Nos. Hex flange bolts **(M8) (a)** LH from frame.

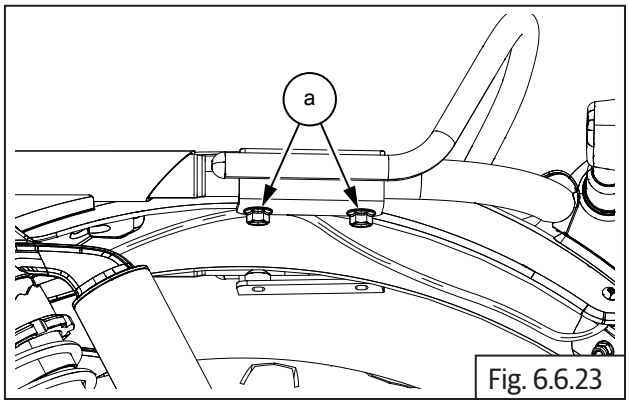

Fig. 6.6.23

	12 mm Socket with Ratchet

Inspection

Mudguard/Reflector/Grab handle

- Clean Mudguard. Inspect for any scratches, cracks, damages on mudguard and replace if required.
- Inspect Infill rear mud cover for any cracks or damages. Replace if required.
- Inspect rear reflector for any cracks or damages. Replace if required.
- Inspect grab handle for any cracks, bends or damages and replace if required.

Front and Rear number plates

- Inspect number plates and bracket for rust formation and cracks. Replace if required.

Assembly

6.6.9. Grab Handle

- Locate grab handle on frame and ensure the mounting holes are aligned.
- Tighten grab handle on frame using 4 Nos. Hex flange bolts **(M8) (a)**.

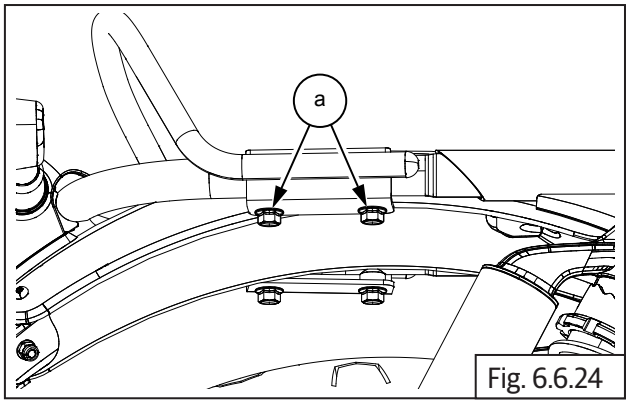

Fig. 6.6.24

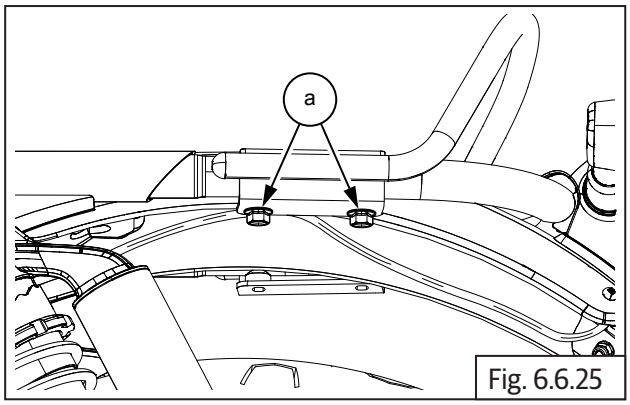

Fig. 6.6.25

	12 mm Socket with Ratchet
Torque	25 N-m/2.54 kgf-m

6.6.10. Rear Mudguard Infill Cover

- Locate and align rear mudguard infill cover into frame.
- For Interceptor models: Locate the rear brake master cylinder reservoir clamp on the bottom RH side of the infill cover and ensure the mounting holes are aligned.
- Locate and tighten 5 Nos. Hex socket head bolts **(M6) (a)** and fix the rear mudguard infill cover.

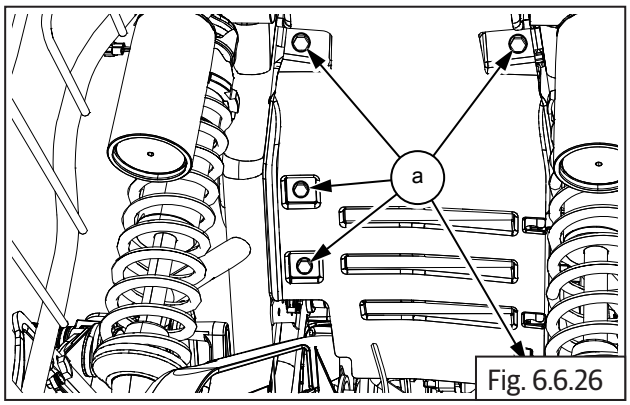

Fig. 6.6.26

	10 mm Socket with Ratchet
Torque	3 N-m/0.3 kgf-m

6.6.11. Rear Mudguard

⚠ CAUTION

DO NOT over tighten bolts and nuts as it may crack or break the plastic parts and cause vibration and noise while driving.

- Route the tail lamp wiring harness **(a)** into rear mudguard **(b)** and secure with rubber clip.

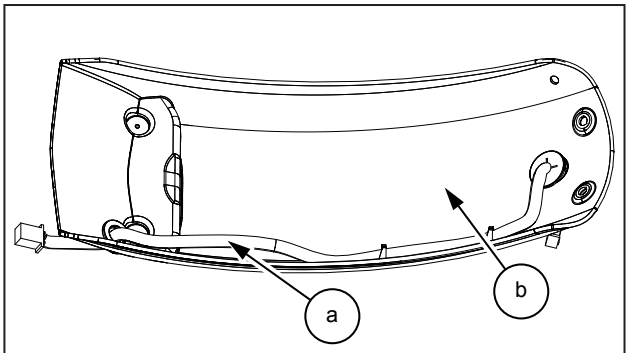

Fig. 6.6.27

- Locate the rear mudguard **(a)** into frame and ensure the mounting holes are aligned.

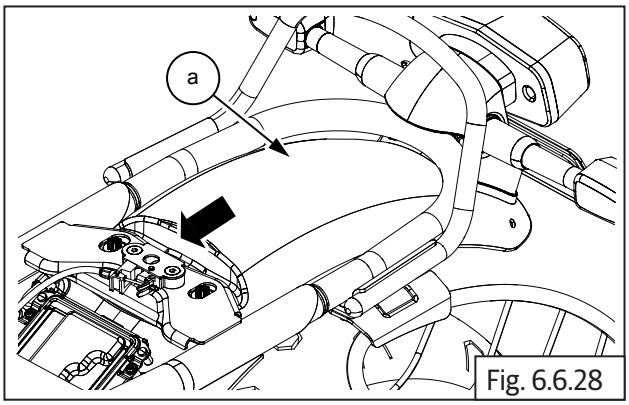

Fig. 6.6.28

- Insert and tighten 2 Nos. Torx screws **(T20) (a)** along with washers into frame bracket **(b)**.

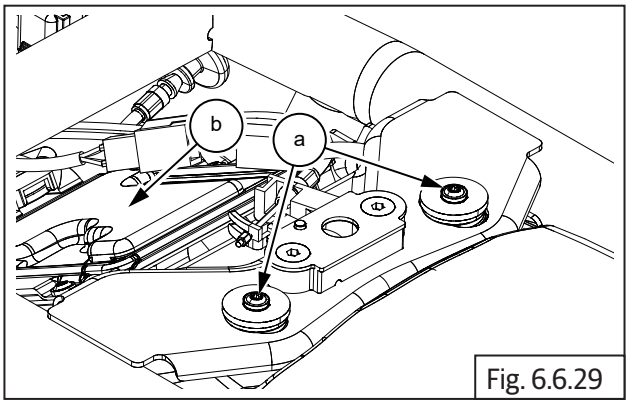

Fig. 6.6.29

	T20 Torx socket with Ratchet
Torque	1.5 N-m/0.15 kgf-m

- Hold tail lamp with bracket near rear mudguard, connect tail lamp and trafficator connectors **(a)** into wiring harness.
- Align tail lamp bracket to the mounting holes in the rear mudguard.

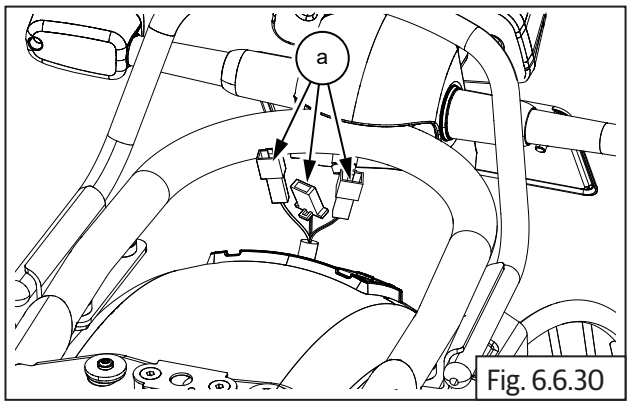

Fig. 6.6.30

- Insert and tighten 2 Nos. Hex flange bolts **(M6) (a)** from rear mudguard to fix tail lamp assembly.

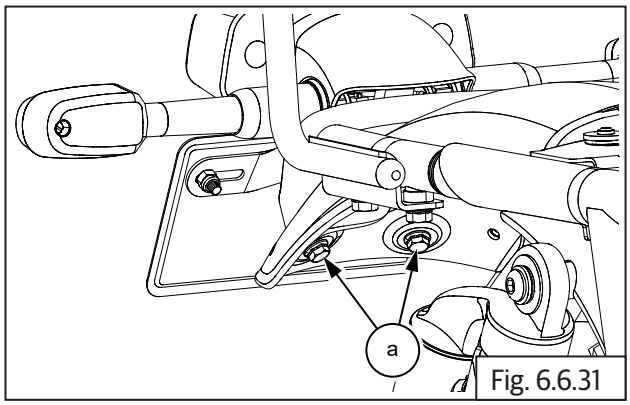

Fig. 6.6.31

	10 mm Socket with Ratchet

- Connect tail lamp connector **(a)** into wiring harness.

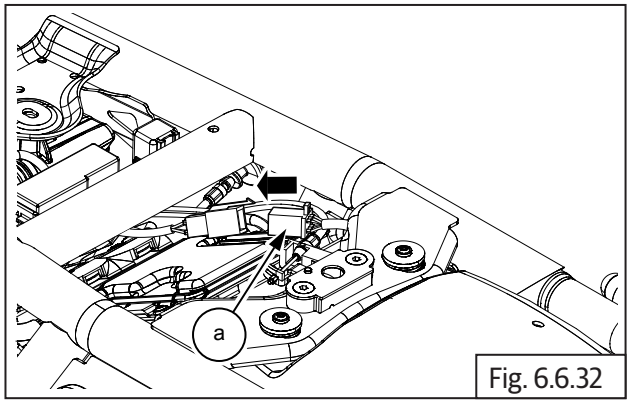

Fig. 6.6.32

- Assemble rear mudflap **(a)** onto rear mudguard **(b)**.

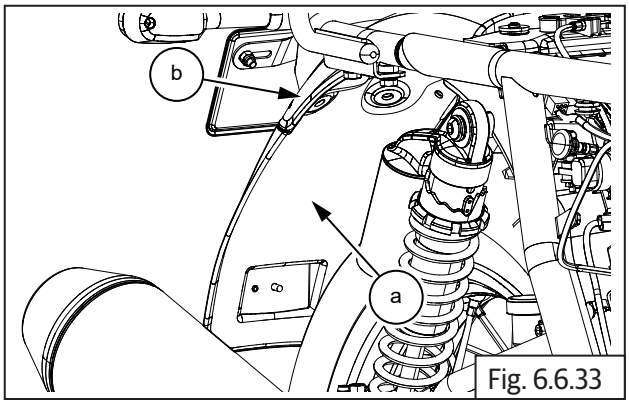

Fig. 6.6.33

- Support cross recessed pan screw **(a)** with cross screw driver and locate and tighten 2 Nos. Hex nuts **(M6) (b)**.

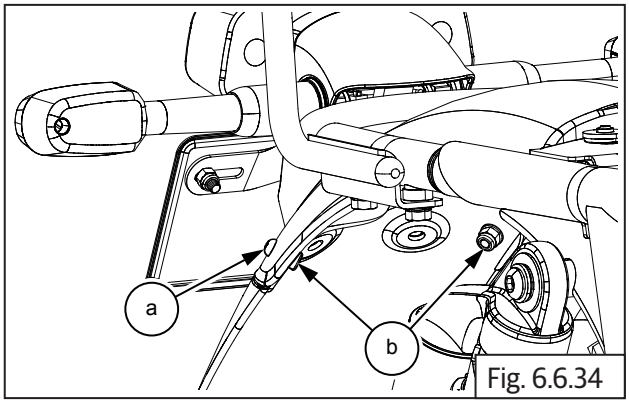

Fig. 6.6.34

	Cross screw driver and 10 mm Socket with Ratchet

6.6.12. Reflector

- Locate reflector **(a)** into rear mudflap guide **(b)** hole and tighten Hex nut **(M4) (c)** along with washer.

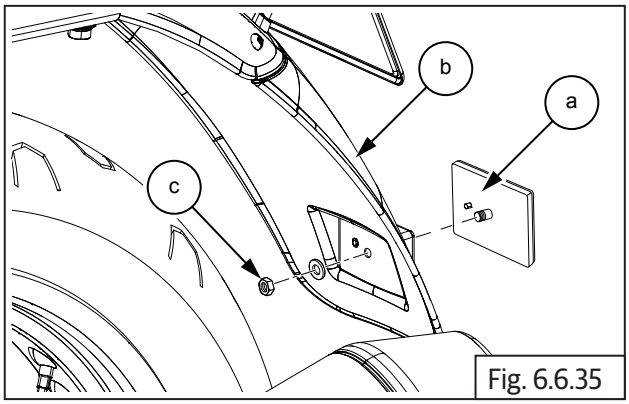

Fig. 6.6.35

	6 mm Socket with Ratchet

6.6.13. Rear Number Plate Bracket

- Locate rear number plate bracket in place.
- Locate and tighten 2 Nos. Hex flange head bolts **(M6) (a)** into rear number plate bracket **(b)**.

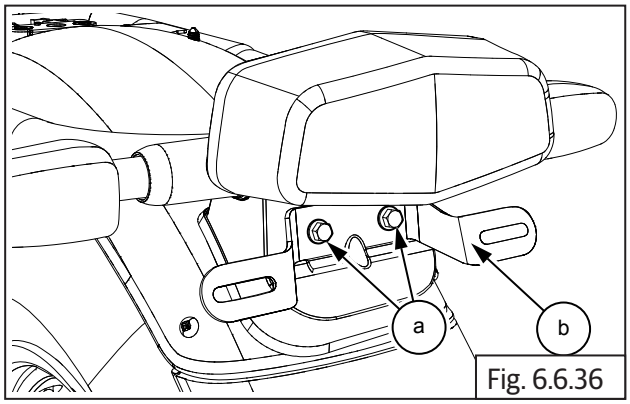

Fig. 6.6.36

	10 mm Socket with Ratchet
Torque	10 N-m/1 kgf-m

6.6.14. Rear Number Plate (Only for India)

- Position rear number plate against bracket and ensure the mounting holes are aligned.
- Insert pan head screw **(M6) (a)** into the number plate.
- Locate Hex nut **(M6) (b)** along with washer **(c)** on pan head screw from inner side of rear mudguard.

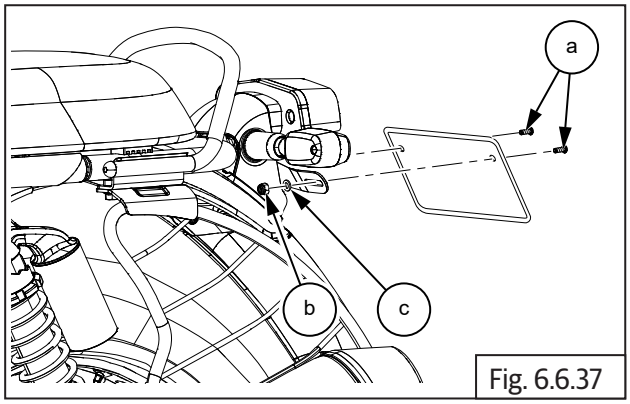

Fig. 6.6.37

- Suitably hold pan head screw **(M6) (a)** and tighten hex nut **(M6) (b)**.

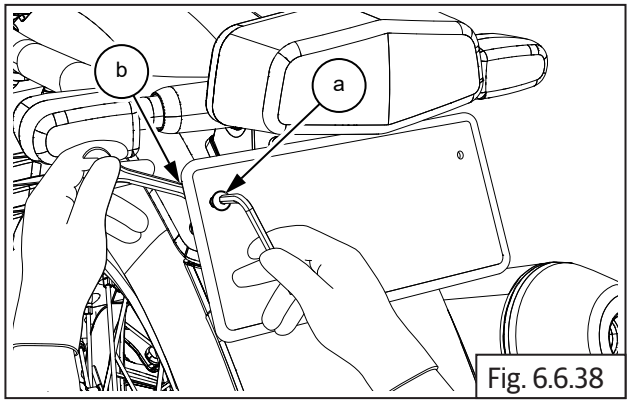

Fig. 6.6.38

	5 mm Allen key and 10 mm Double end spanner
Torque	5 N-m/0.5 kgf-m

- Repeat above procedure for fixing other side of number plate with screw **(a)** and nut **(b)**.

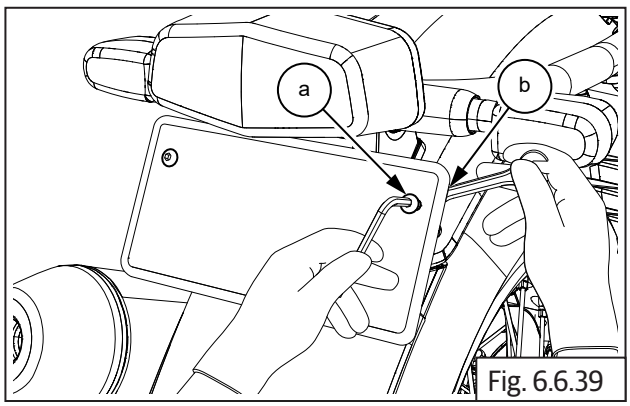

Fig. 6.6.39

	5 mm Allen key and 10 mm Double end spanner
Torque	5 N-m/0.5 kgf-m

6.6.15. Front Mudguard

NOTE
• *Do not over tighten bolts and nuts into mudflaps and mudguards, it may crack or break the plastic parts and cause noise or vibration while driving.*

- Locate fork brace onto mudguard and tighten 4 Nos. Hex socket button head screws **(M6) (a)**.

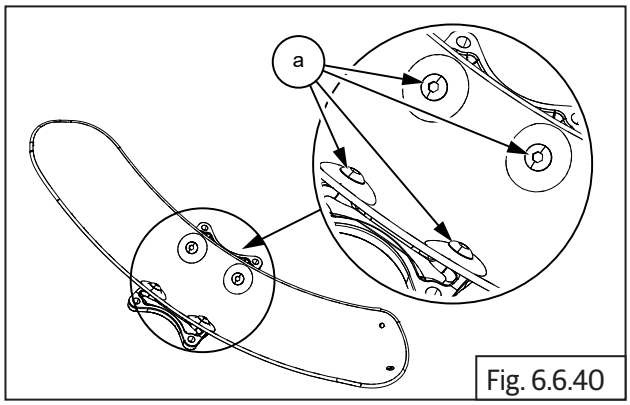

Fig. 6.6.40

	5 mm Allen socket with Ratchet
Torque	3 N-m/0.3 kgf-m

- Locate and tighten 3 Nos. Hex nuts **(M6) (a)** and attach mudflap to mudguard.

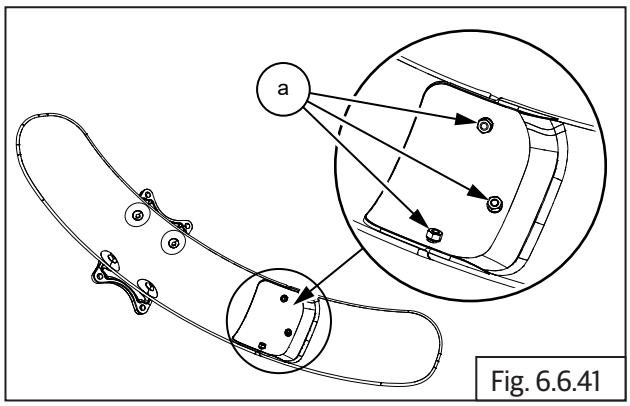

Fig. 6.6.41

	8 mm Socket with Ratchet and Screw driver
Torque	3 N-m/0.3 kgf-m

- Ensure handlebar is turned to one side, tilt front mudguard and insert between the fork legs.
- Align mounting holes of the fork brace to mounting holes on fork ends LH and RH.
- Locate and tighten 4 Nos. Hex flange bolts **(M6) (a)** and fix mudguard in to fork.

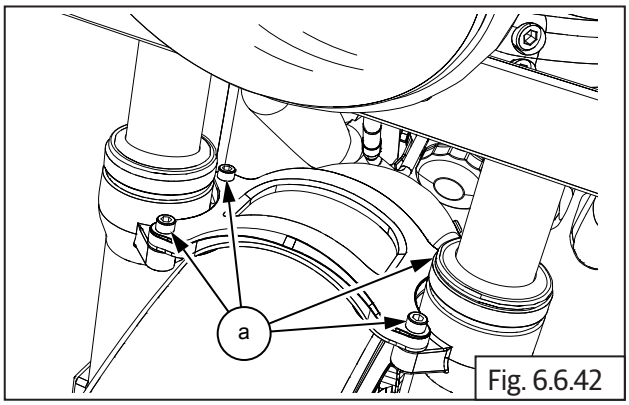

Fig. 6.6.42

	5 mm Allen socket with Ratchet
Torque	10 N-m/1 kgf-m

6.6.16. Front Number Plate (Only for India)

- Locate and tighten 2 Nos. Hex flange bolts **(M6) (a)** and attach number plate bracket into yoke lower **(b)**.

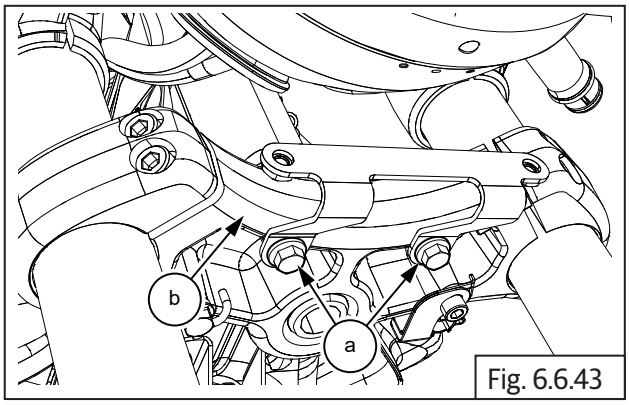

Fig. 6.6.43

	10 mm Socket with Ratchet
Torque	10 N-m/1 kgf-m

- Locate and tighten 2 Nos. Pan head screws **(M5) (a)** into number plate **(b)**.

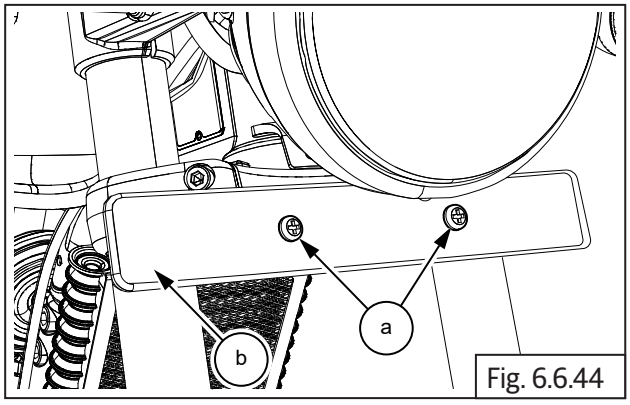

Fig. 6.6.44

	Phillips screw driver

SIDE PANELS AND RIDER SEAT

CONTENTS PAGE

6.7 Side Panels and Rider Seat 433

Dismantling 433

6.7.1. Side Panel RH 433

6.7.2. Rider Seat from Frame 433

6.7.3. Seat Latch Assembly from Frame 433

6.7.4. Side Panel LH 434

Inspection 434

Assembly 434

6.7.5. Side Panel LH 434

6.7.6. Seat Latch Assembly on Frame 435

6.7.7. Rider Seat Assembly on Frame 435

6.7.8. Side Panel RH 435

6.7 Side Panels and Rider Seat

Dismantling

6.7.1. Side Panel RH

- Insert ignition key **(a)** and turn clockwise to unlock and remove side panel RH **(b)** from motorcycle.

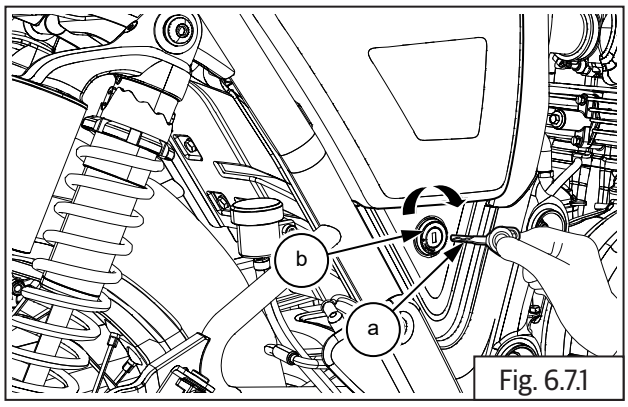

Fig. 6.7.1

6.7.2. Rider Seat from Frame

- Seat lock is located near utility box.
- Pull/Release seat lock **(a)** to remove seat from motorcycle.

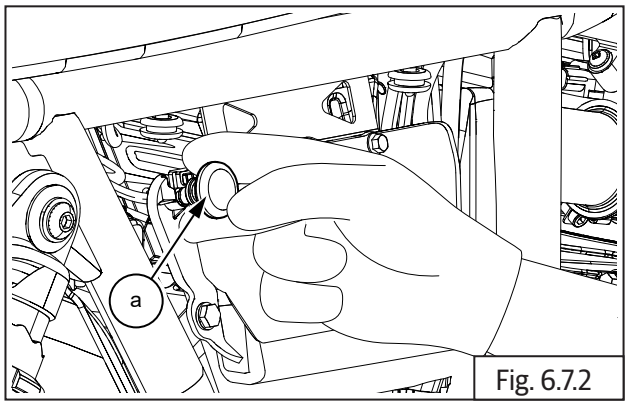

Fig. 6.7.2

- Gently lift and pull seat **(a)** from rear side of motorcycle.

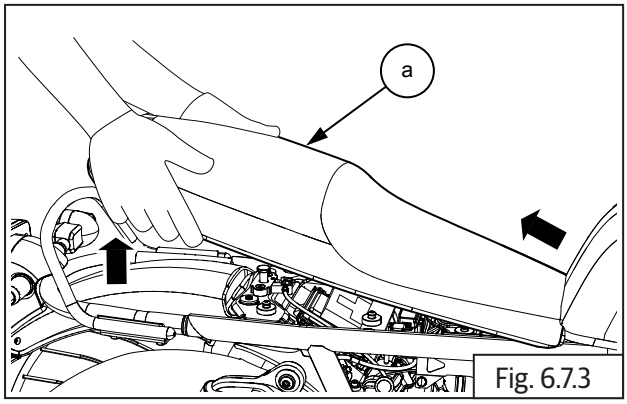

Fig. 6.7.3

NOTE
• *Place the seat in a safe location to prevent from scratches and dirt.*

6.7.3. Seat Latch Assembly from Frame

- The seat latch assembly **(a)** is fixed on frame near engine control unit (ECU).

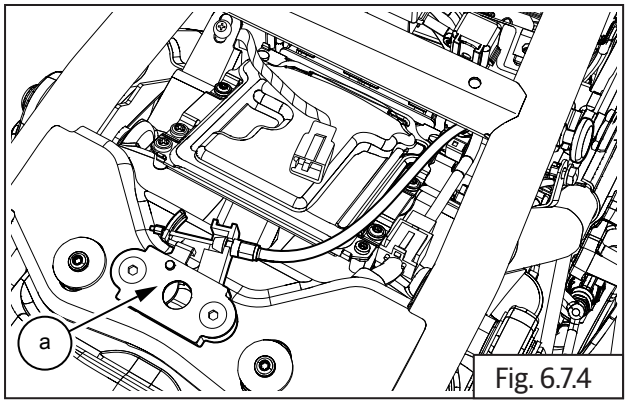

Fig. 6.7.4

- Gently release the cable **(a)** from utility box by pulling it out carefully.

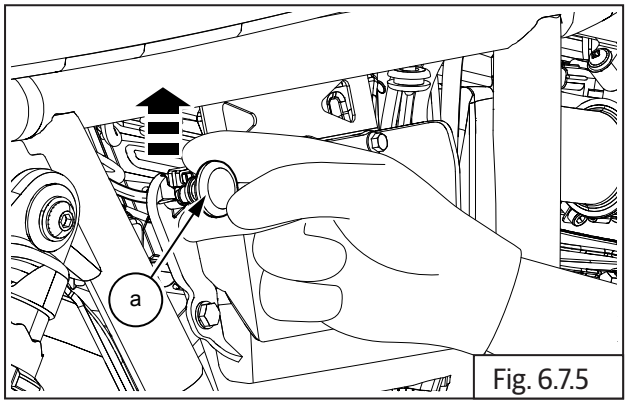

Fig. 6.7.5

- Loosen and remove 2 Nos. Hex socket screws **(M6) (a)** holding seat latch assembly to frame.

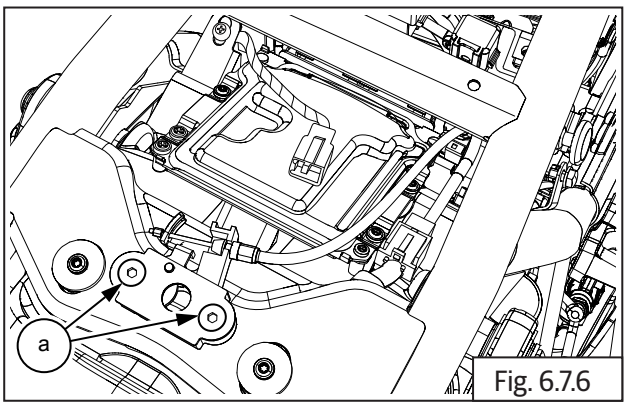

Fig. 6.7.6

	5 mm Hex socket with Ratchet

6.7.4. Side Panel LH

- Loosen and remove LH side panel fitting screw **(a)** at top of frame near engine control unit (ECU) **(b)** (below seat assembly).

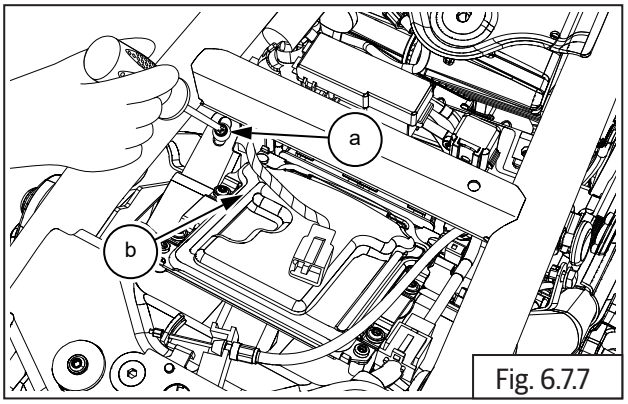

Fig. 6.7.7

	Phillips screw driver

- Gently slide out side panel LH **(a)** from frame.

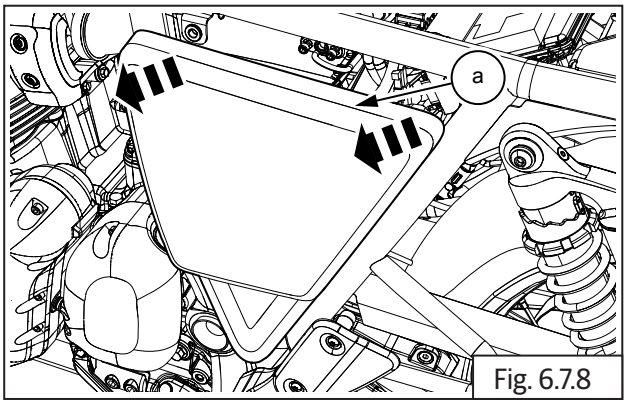

Fig. 6.7.8

Inspection

- Inspect and replace seat latch assembly if stuck or jammed.
- Inspect latch cable for free movement/broken inner strands. Replace seat latch assembly if cable is damaged.

Assembly

6.7.5. Side Panel LH

- Slide LH panel from bottom to fit into frame **(a)**.

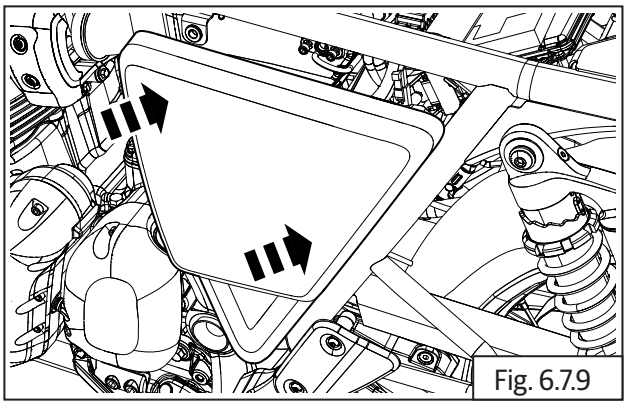
Fig. 6.7.9

- Locate LH side panel fitting screw **(a)** at top of frame near engine control unit (ECU) **(b)** (below seat assembly) and tighten.

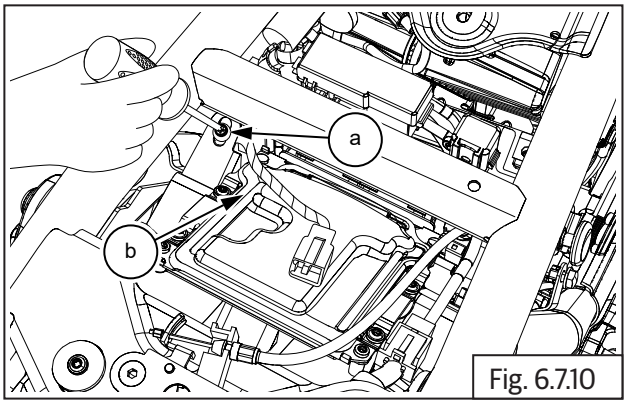

Fig. 6.7.10

	Phillips screw driver

6.7.6. Seat Latch Assembly on Frame

- Locate seat latch on frame with the cable towards the RH side. Align mounting holes and tighten with 2 Nos. Hex socket screws **(M6) (a)**.

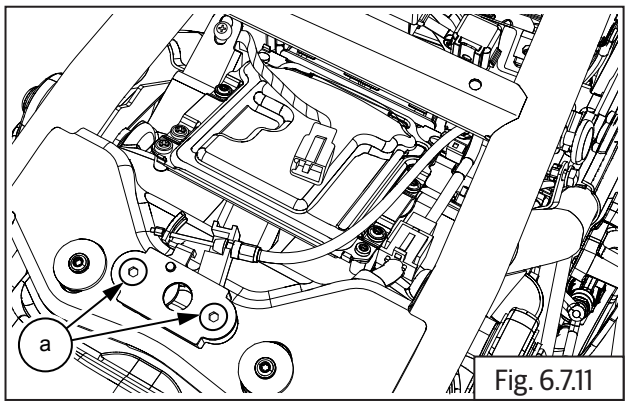

Fig. 6.7.11

	5 mm Hex socket with Ratchet
Torque	10 N-m/1.0 kgf-m

- Route the cable assembly **(a)** through frame and locate cable outer into slot in seat latch and gently press in place.

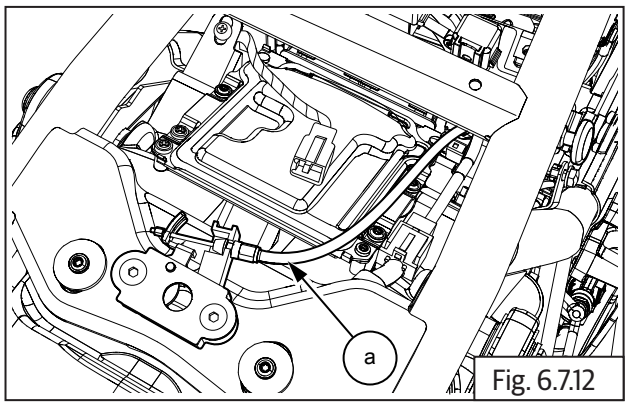

Fig. 6.7.12

6.7.7. Rider Seat Assembly on Frame

- Insert front locking tab of the seat **(a)** into bracket and frame in the fuel tank.
- Ensure lock pin of center of the seat is aligned to the seat lock and gently press to lock the seat.

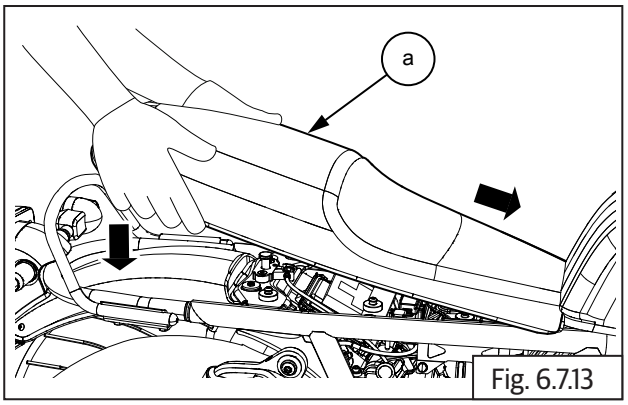

Fig. 6.7.13

6.7.8. Side Panel RH

- Locate side panel RH into frame and lock in its position.
- Insert ignition key **(a)** into side panel RH **(b)** and turn in anticlockwise direction to lock RH side panel.

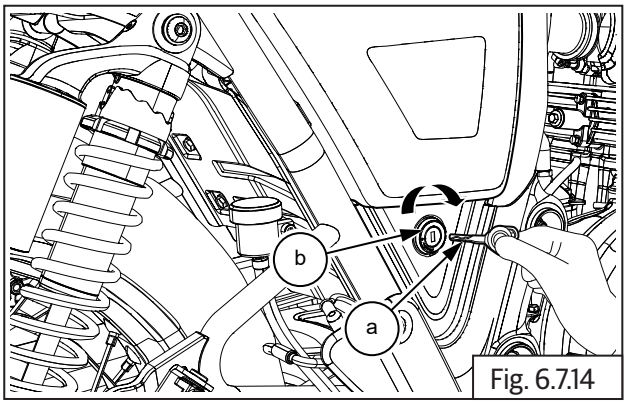

Fig. 6.7.14

WHEELS

CONTENTS **PAGE**

6.8 Wheels 440

Dismantling 440

6.8.1. Front Wheel Assembly 440

6.8.2. Front Wheel and Brake Disc 441

6.8.3. Rear Wheel from Swing Arm 445

6.8.4. Rear Wheel and Brake Disc 447

Inspection 450

6.8.5. Front Wheel and Brake Disc 450

6.8.6. Rear Wheel and Brake Disc 452

Assembly 455

6.8.7. Tyre Assembly On Wheel Rim 455

6.8.8. Rear Wheel and Brake Disc 456

6.8.9. Rear Wheel into Swing Arm 458

6.8.10. Drive Chain Free Play Adjustment 459

6.8.11. Tyre Assembly on Wheel Rim 461

6.8.12. Front Wheel and Front Brake Disc 461

6.8.13. Front Wheel into Front Fork Assembly 462

Troubleshooting 464

Front Wheel Assembly

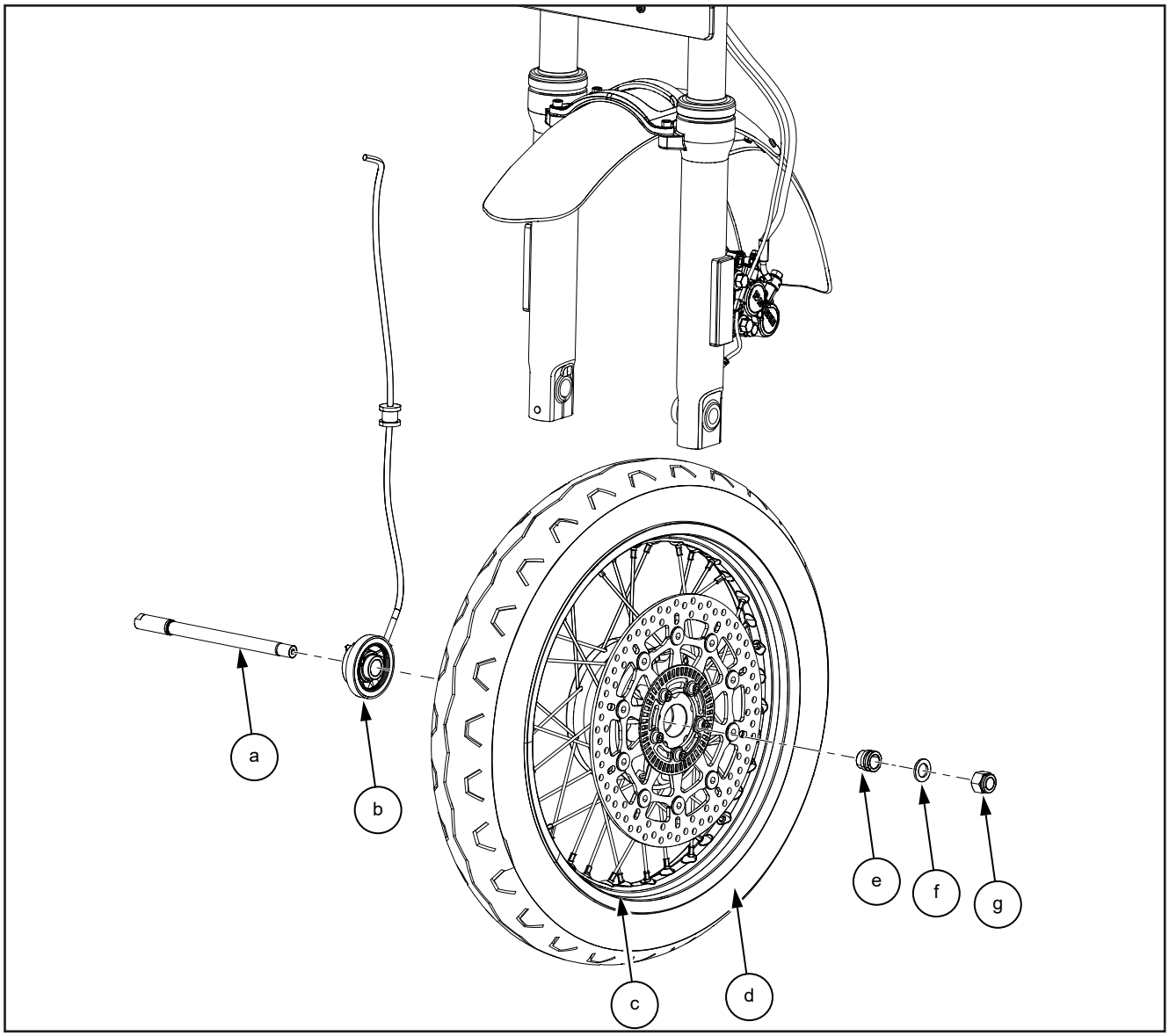

Item No.	Description	Quantity
a	Spindle-Front Wheel	1
b	Wheel Sensor Assembly	1
c	Rim, 2.5 x 18", Silver/Rim, 2.5 x 18", Black	1
d	Tyre	1
e	Spacer Disc Side	1
f	Plain Washer	1
g	Hex. Nut with Nylock Insert M16 x 1.5	1

Front Wheel and Brake Disc

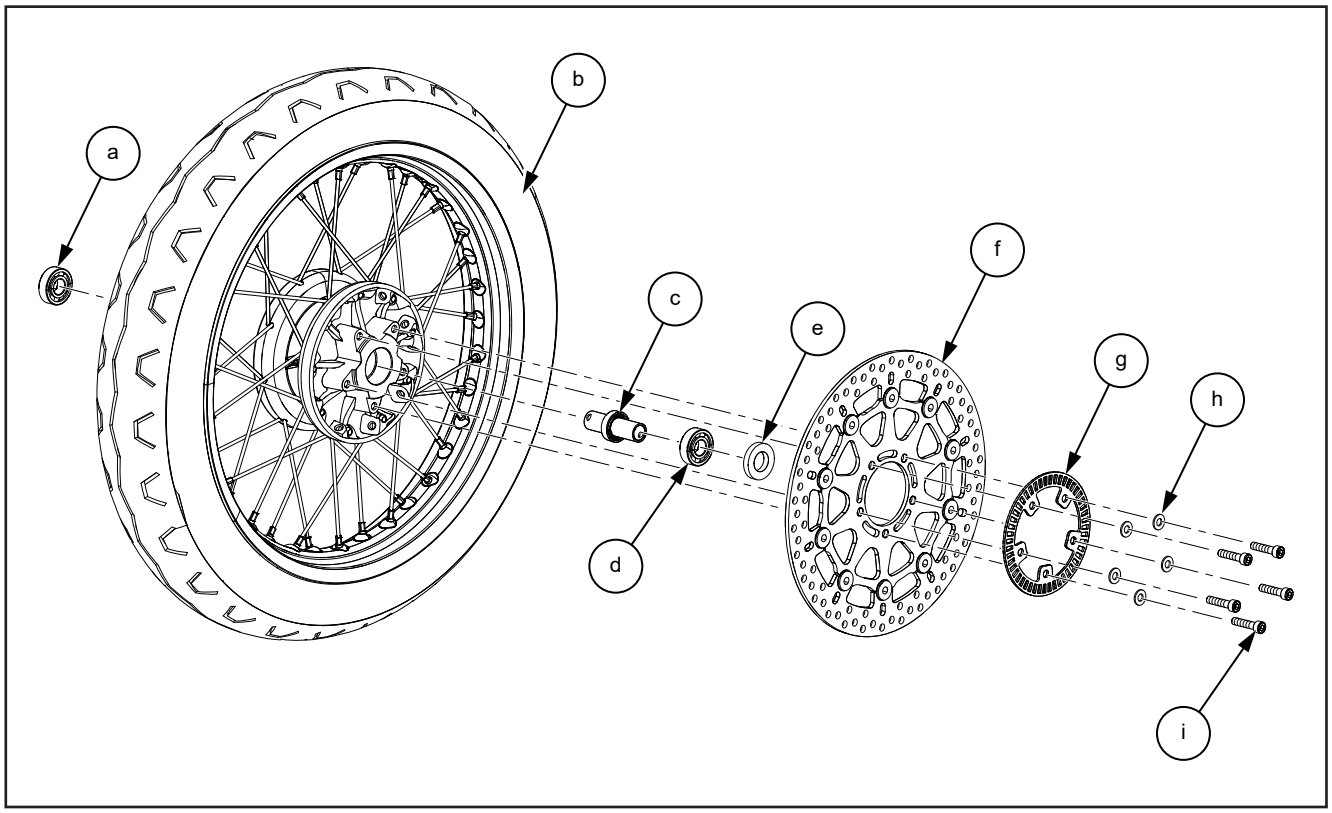

Item No.	Description	Quantity
a	Deep Groove Ball Bearing 6203 (17 X 40 X12)[Double Side Sealed]	1
b	Tyre	1
c	Spacer, Wheel, 17 20.2	1
d	Deep Groove Ball Bearing 6203 (17 X 40 X12)[Double Side Sealed]	1
e	Grease seal	1
f	Brake Disc, 320 mm, Floating	1
g	Toner Wheel Front	1
h	Washer	5
i	Hex Soc Head Screw M8	5

6.8 Wheels

Dismantling

6.8.1. Front Wheel Assembly

⚠ CAUTION

Ensure the motorcycle is upright on a firm and flat surface.

- Locate a scissor jack **(a)** under the cradle frame **(b)** and lift motorcycle such that the front wheel is off the ground by minimum 6 inches (or 15 cm).

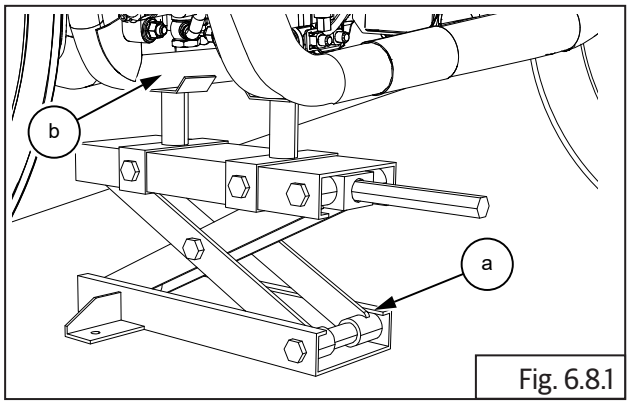

Fig. 6.8.1

- Hold spindle **(a)** from RH with spanner and loosen and remove Hex nut **(M16) (b)** along with washer **(c)** from LH.

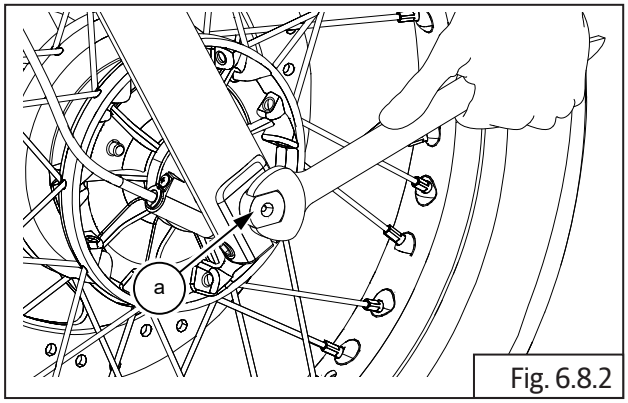

Fig. 6.8.2

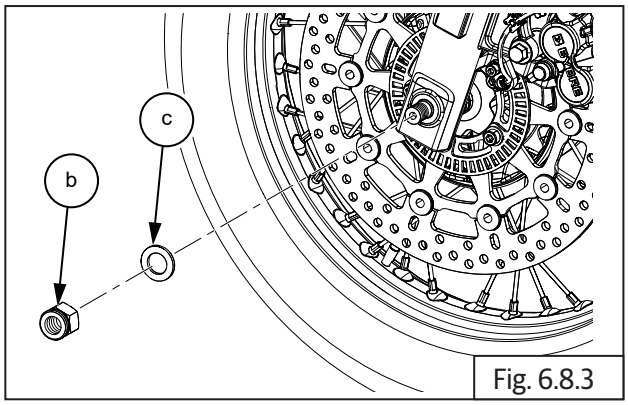

Fig. 6.8.3

	24 mm Socket with Ratchet and 16 mm Double end spanner

- Loosen Hex socket head bolt **(M6) (a)** from front fork assembly RH.

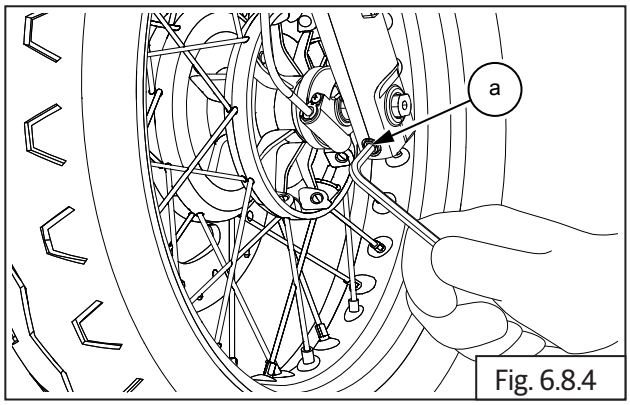

Fig. 6.8.4

	5 mm Allen key

- Gently tap spindle **(a)** using mallet **(b)** from LH.

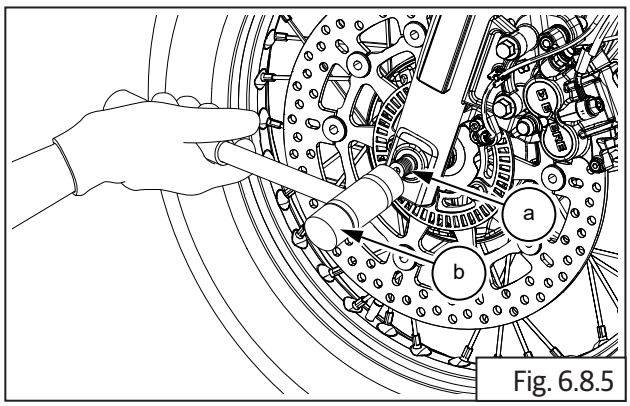

Fig. 6.8.5

	Mallet

- Gently remove spindle **(a)** from wheel hub and front fork assembly RH **(b)**.

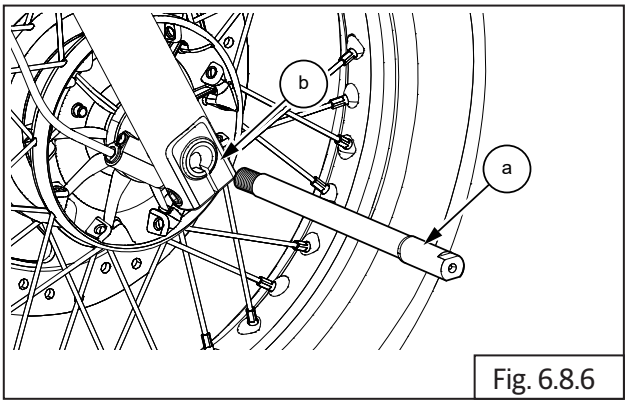

Fig. 6.8.6

! CAUTION

Ensure the wheel speed sensor cable does not get stretched and damaged. Support wheel from bottom while removing spindle.

- Gently lower the wheel **(a)** such that it comes out of the fork legs **(b)**.

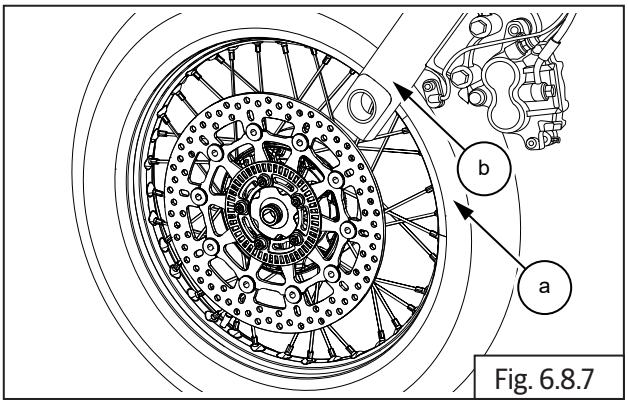

Fig. 6.8.7

- Gently remove wheel speed sensor assembly **(a)** located between wheel hub **(b)** and fork assembly RH **(c)** and support suitably.

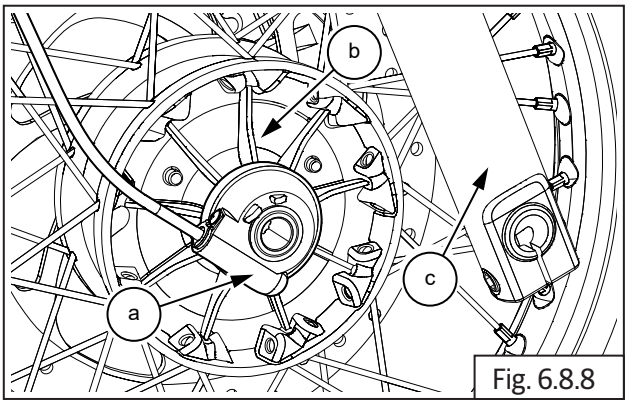

Fig. 6.8.8

- Remove spacer **(a)** from wheel hub **(b)** on LH.

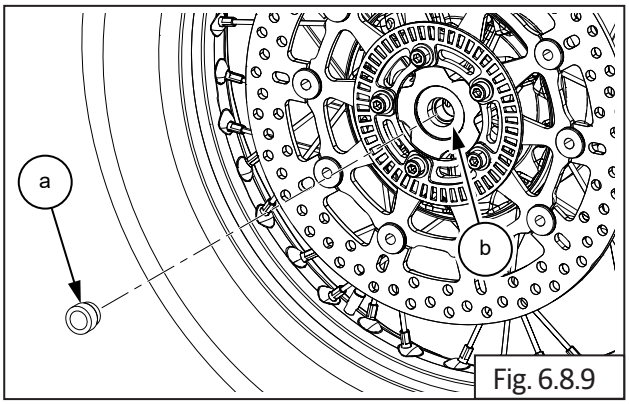

Fig. 6.8.9

6.8.2. Front Wheel and Brake Disc

⚠ WARNING

DO NOT place/store the wheel with disc facing downward. It will damage and change disc warpage.

! CAUTION

Place a soft cloth under the wheel hub center mounting hole area to prevent damage.

Please loosen thread sealant applied screws with care.

- Loosen and remove 5 Nos. Hex socket head bolts **(M6) (a)** holding disc plate to hub, in crisscross pattern.

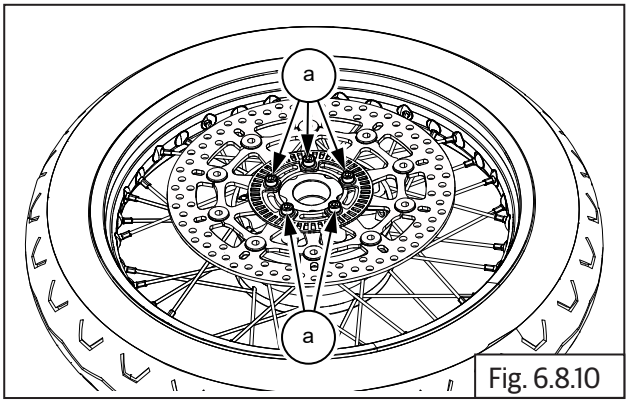

Fig. 6.8.10

	6 mm Allen socket with Ratchet

- Remove toner wheel front **(a)** from hub and store carefully.

⚠ CAUTION

Avoid any bends or damages to the toner wheel as it will affect the functioning of ABS.

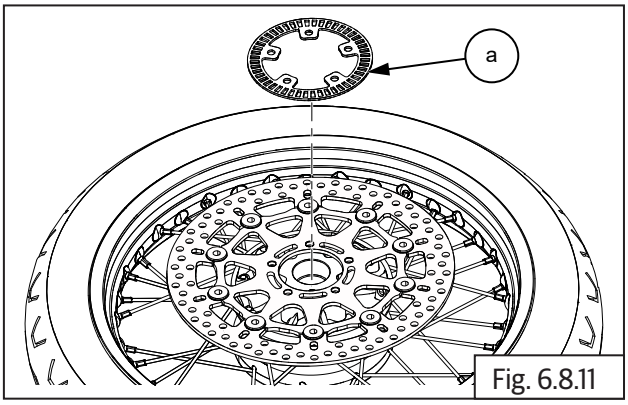

Fig. 6.8.11

- Remove front brake disc **(a)** from hub and store carefully.

⚠ CAUTION

Ensure the brake disc does not get damaged as it will affect the brake efficiency.

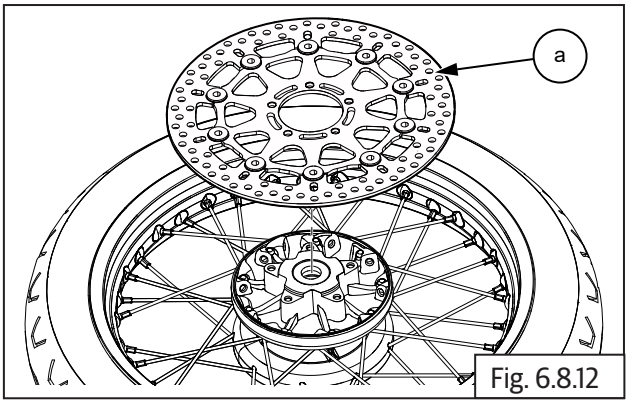

Fig. 6.8.12

- Remove grease seal **(a)** from LH.

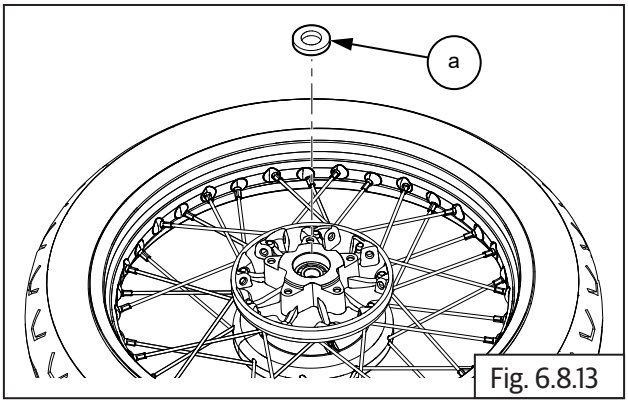

Fig. 6.8.13

- Locate a suitable pointed punch on hole in spacer from RH of hub to remove bearing LH **(a)**.

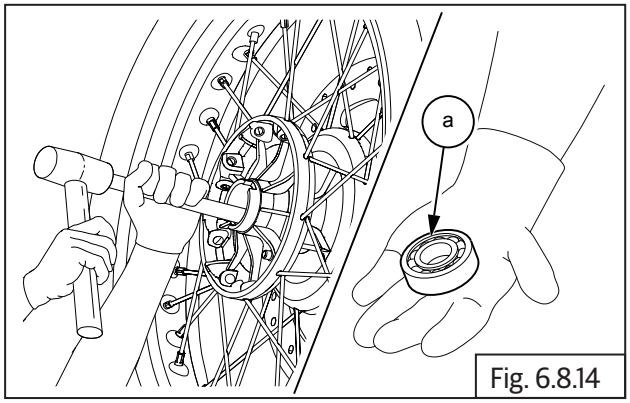

Fig. 6.8.14

	Punch and Mallet

- Insert a punch into hub from LH side and drive out bearing RH **(a)**.

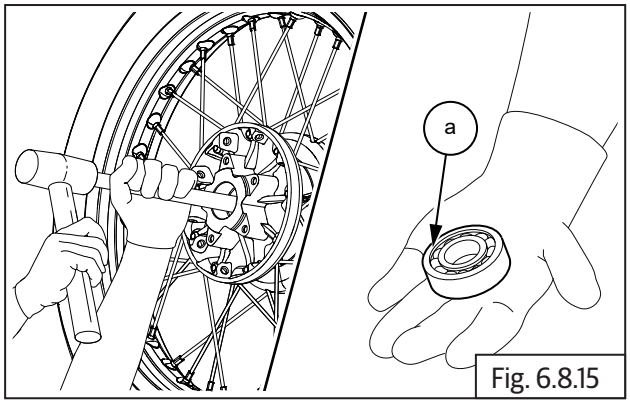

Fig. 6.8.15

	Punch and Mallet

- Remove spacer **(a)**.

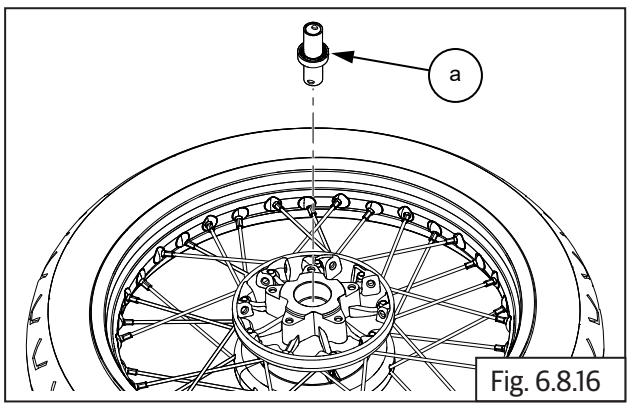

Fig. 6.8.16

Rear Wheel Assembly

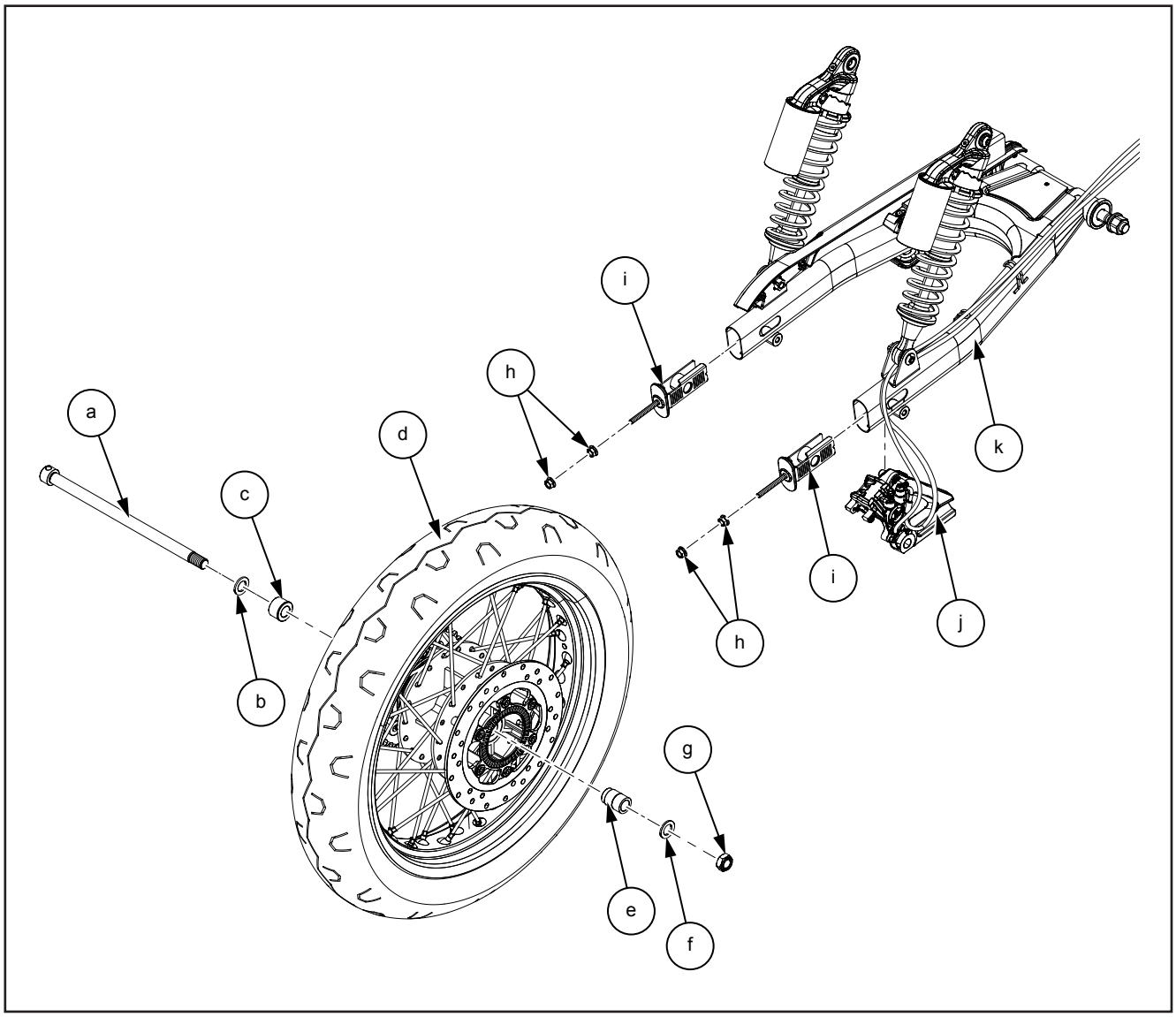

Item No.	Description	Quantity	Item No.	Description	Quantity
a	Spindle-Long	1	g	Hex U Nut M24 x 1.5	1
b	Plain Washer	1	h	Flange Hex. Nut 8 x M 1.25	4
c	Spacer-Wheel	1	i	Plate - Chain Adjuster	2
d	Wheel, Rear, Assembly	1	j	Rear Brake Caliper Assembly	1
e	Spacer RH	1	k	Swing Arm	1
f	Plain Washer	1			

Rear Wheel and Brake Disc

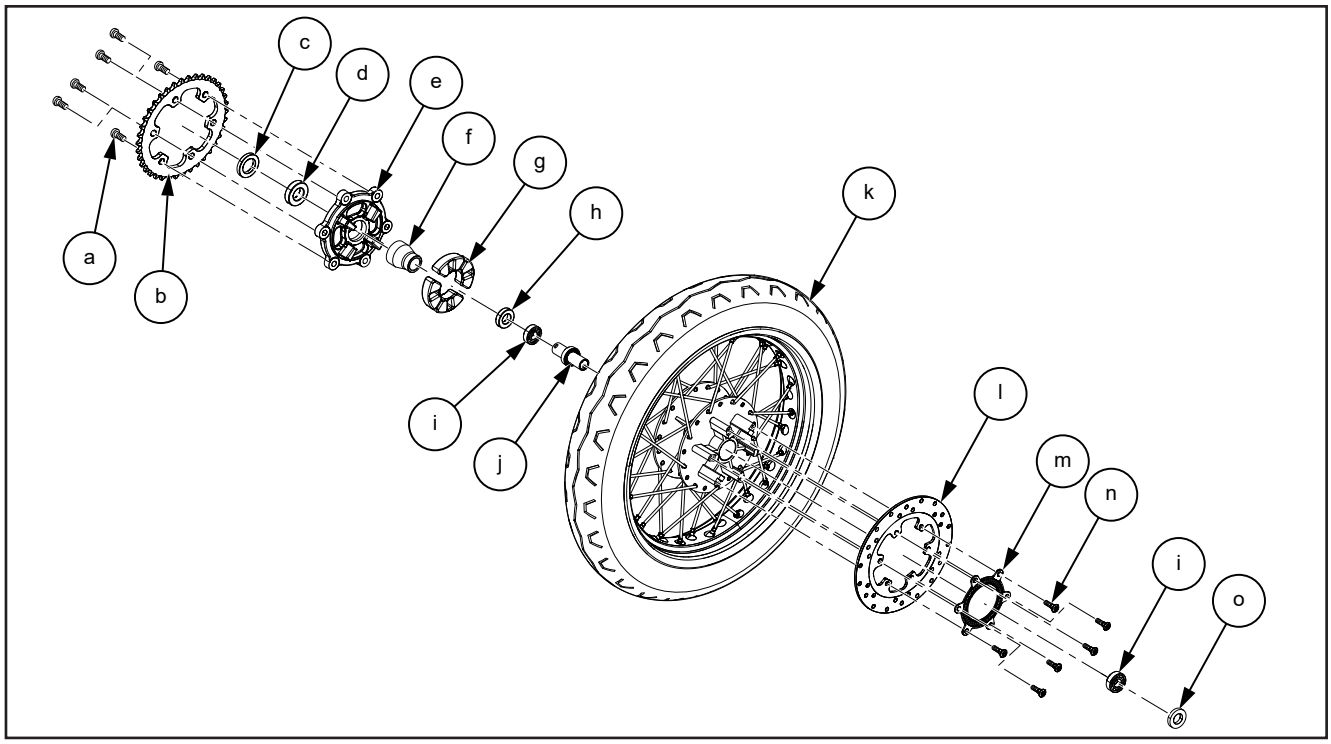

Item No.	Description	Quantity
a	Hex Socket Bolt M6	6
b	Sprocket Rear Drive	1
c	Grease Seal	1
d	Deep Groove Ball Bearing 6005 (25 x 47 x 12) (Double Side Sealed)	1
e	Sprocket Carrier Silver	1
f	Spacer Bush 17 x 25 x 29	1
g	Cush Rubber	4
h	Grease Seal	1
i	Deep Groove Ball Bearings 6203 (17 x 40 x 12) (Double Side Sealed)	2
j	Spacer Wheel Internal	1
k	Rear Wheel Assembly	1
l	Rear Brake Disc	1
m	Toner Wheel Rear (ABS)	1
n	Hex Socket Button Head Screw M6 x 1 x 14	6
o	Grease seal	1

6.8.3. Rear Wheel from Swing Arm

⚠ CAUTION

Ensure the motorcycle is upright on a firm and flat surface.

- Locate a scissor jack **(a)** under the cradle frame **(b)** and lift motorcycle such that the rear wheel is off the ground.

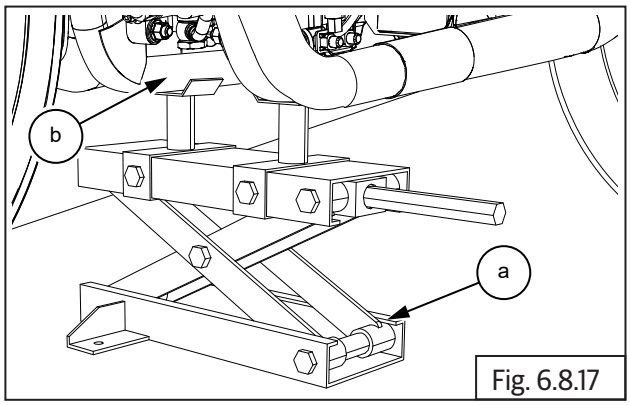

Fig. 6.8.17

- Loosen and remove Hex axle nut **(M16) (b)** from RH and hold other side LH with tommy bar **(a)**.

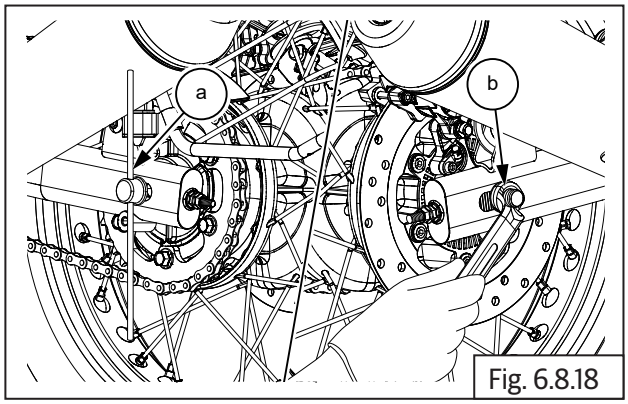

Fig. 6.8.18

	24 mm Ring spanner and Tommy bar

- Remove washer **(a)** from spindle **(b)** on swing arm RH.

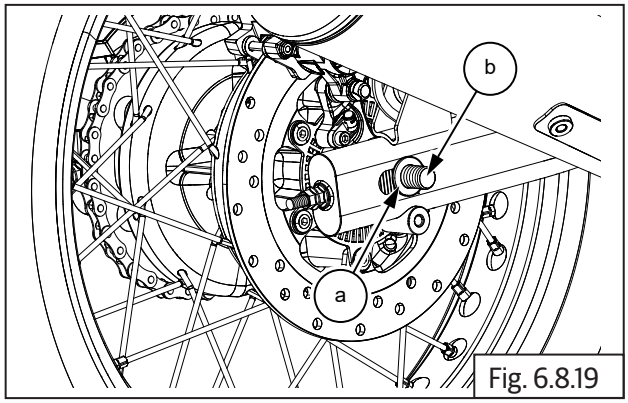

Fig. 6.8.19

- Loosen lock nut **(M8) (a)** and adjuster nut **(b)** on both LH and RH chain adjusters.

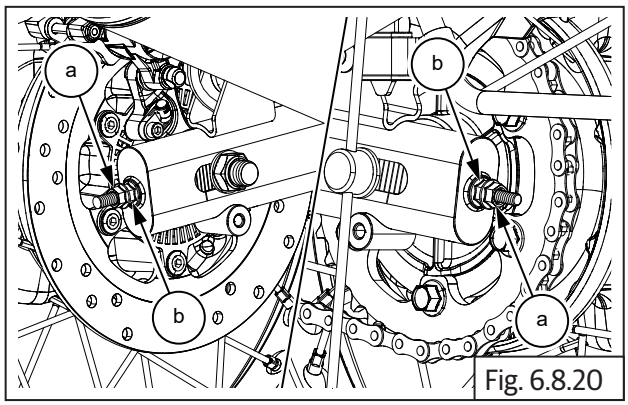

Fig. 6.8.20

	12 mm Double end spanner

- Gently tap spindle **(a)** from RH to pull out from LH.

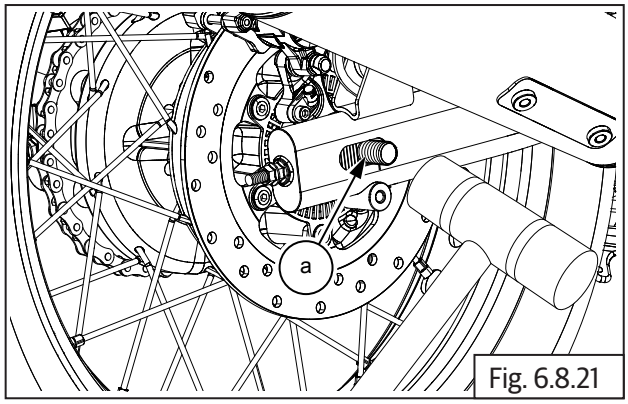

Fig. 6.8.21

	Mallet

- Push rear wheel forward to increase chain slack on rear sprocket.

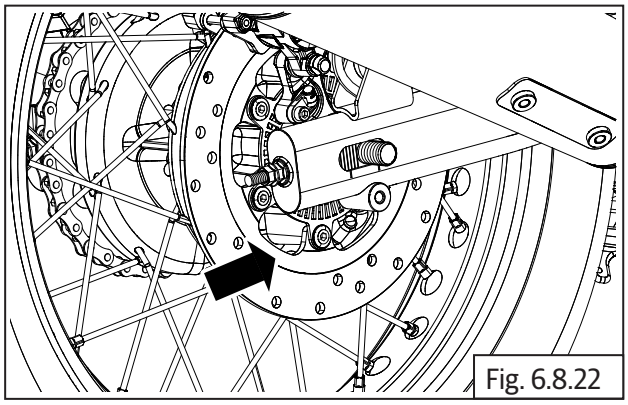
Fig. 6.8.22

- Remove chain adjuster assembly **(a)** from swing arm RH **(b)**.

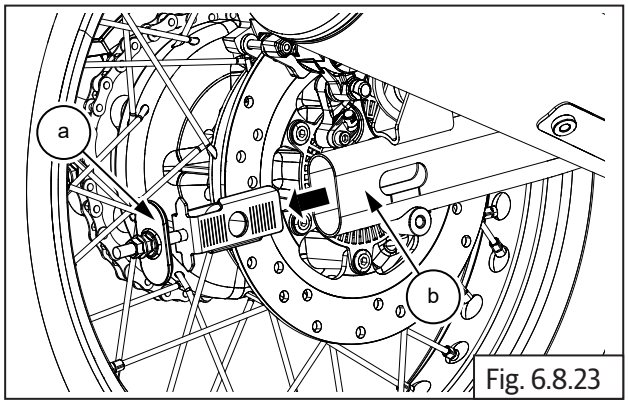

Fig. 6.8.23

- Remove spindle **(a)** from rear wheel LH along with washer **(b)**.

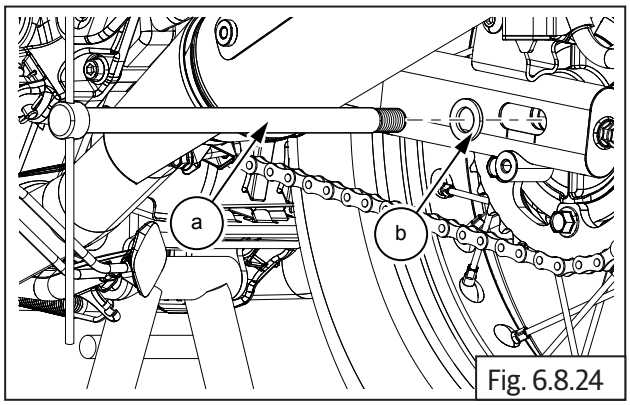

Fig. 6.8.24

	Tommy bar

- Gently remove chain adjuster assembly **(a)** from swing arm LH **(b)**.

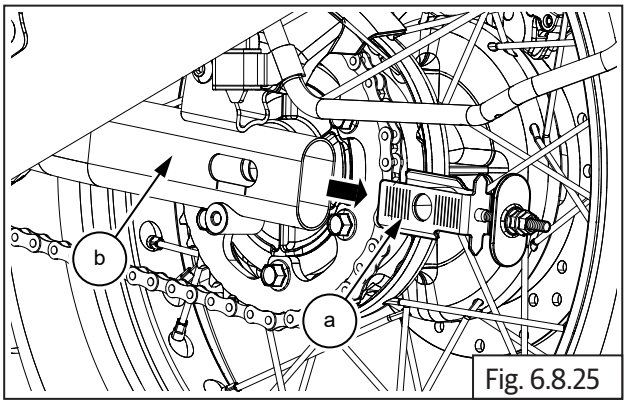

Fig. 6.8.25

- Slide out and remove brake caliper **(a)** with bracket.

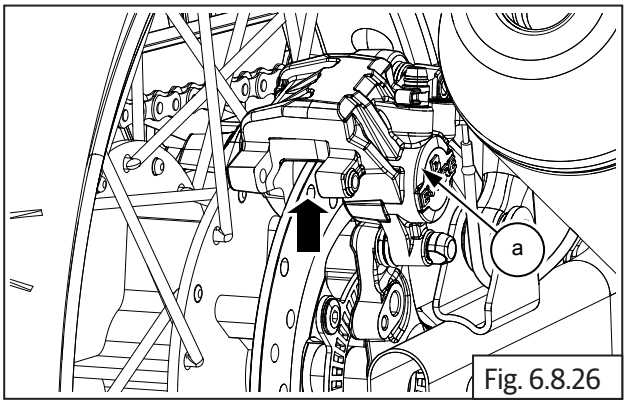

Fig. 6.8.26

⚠ CAUTION

Support the caliper carefully and ensure it does not get damaged.

- Ensure limiter pad **(a)** is placed between brake pads in caliper assembly.

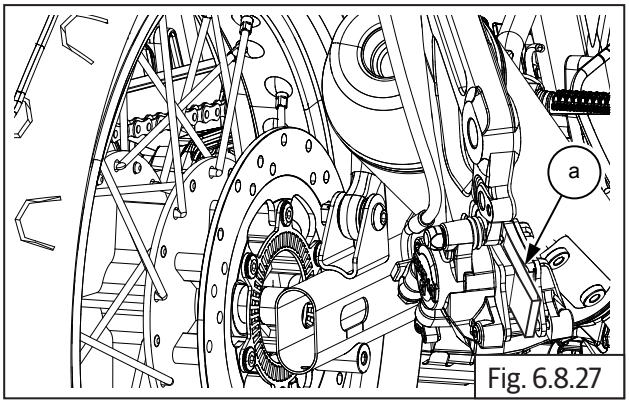

Fig. 6.8.27

- Gently release drive chain **(a)** from sprocket **(b)**.

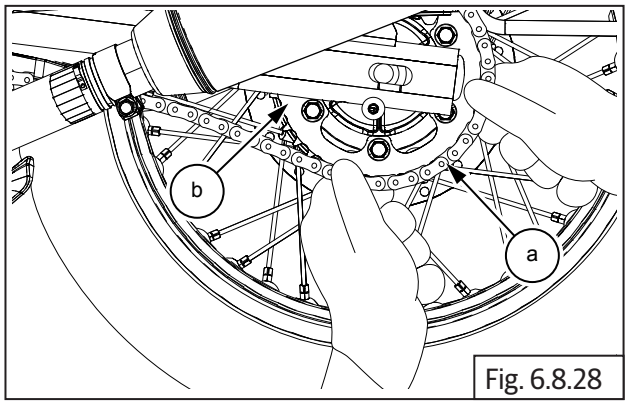

Fig. 6.8.28

- Gently remove spacer LH **(a)** from the rear wheel hub **(b)**.

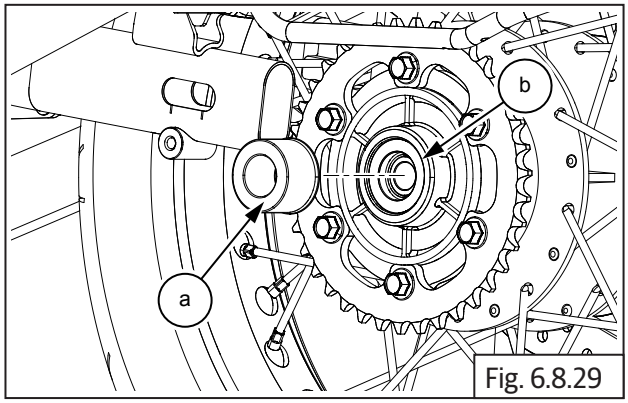

Fig. 6.8.29

- Gently remove spacer RH **(a)** from the rear wheel hub **(b)**.

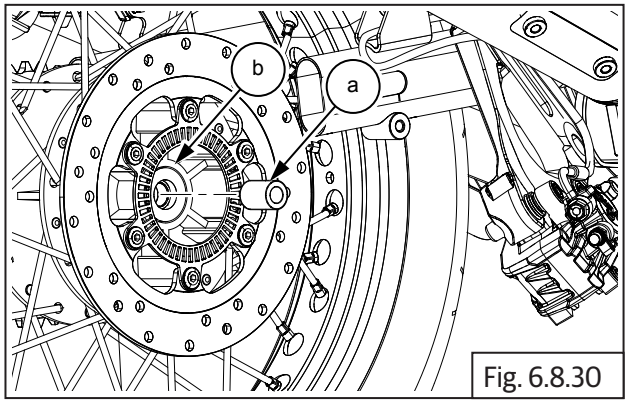

Fig. 6.8.30

- Gently remove rear wheel **(a)** from swing arm **(b)**.

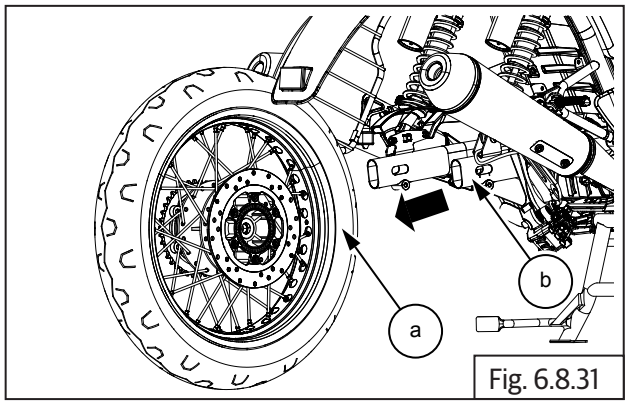

Fig. 6.8.31

6.8.4. Rear Wheel and Brake Disc

- Loosen and remove 6 Nos. Hex flanged socket head bolts **(M8) (a)** to remove chain sprocket **(b)**.

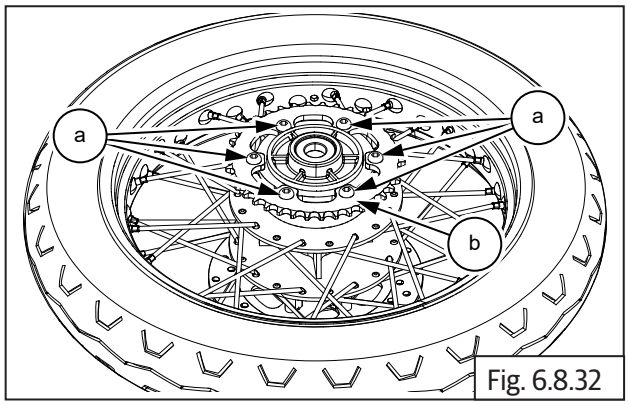

Fig. 6.8.32

	6 mm Allen socket with Ratchet

- Remove chain drive sprocket **(a)** from sprocket carrier **(b)**.

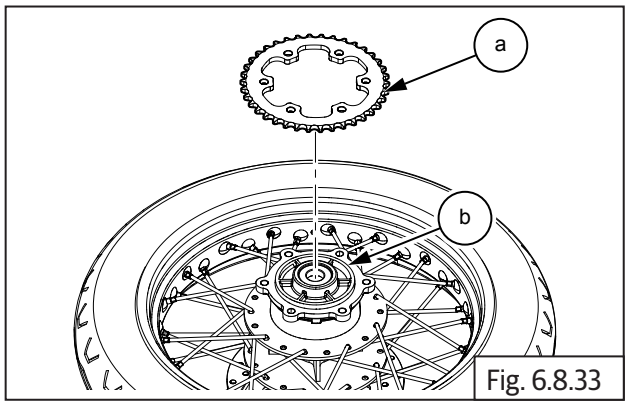

Fig. 6.8.33

- Remove sprocket carrier **(a)** from the rear wheel hub **(b)**.

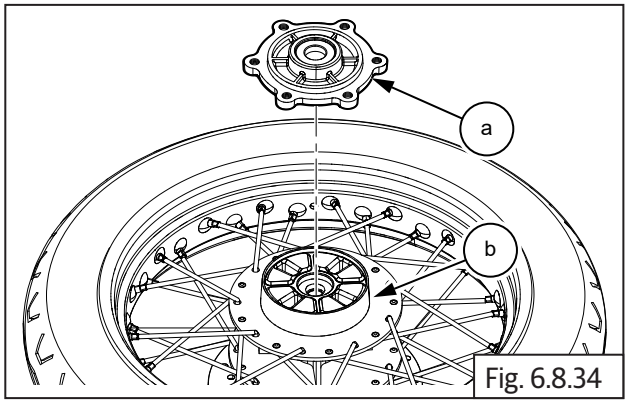

Fig. 6.8.34

- Remove 4 Nos. cush rubbers **(a)** from rear wheel hub LH **(b)**.

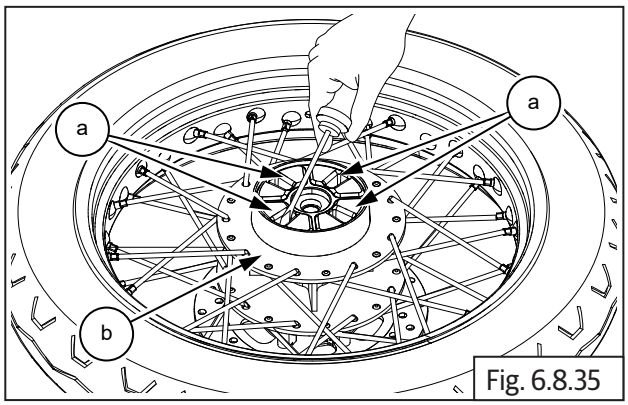

Fig. 6.8.35

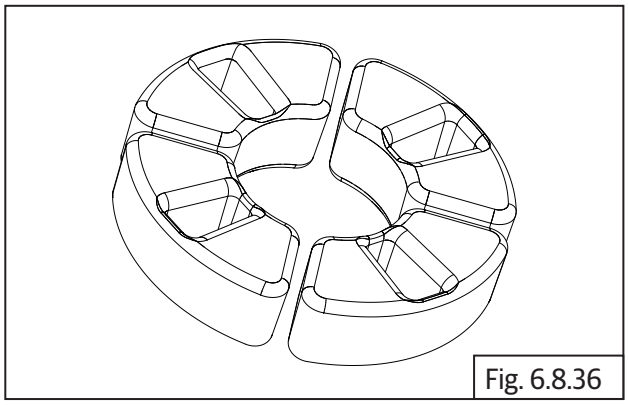
Fig. 6.8.36

	Connector

- Loosen and remove 6 Nos. Hex head button socket screws **(M6) (a)** to remove ABS toner.

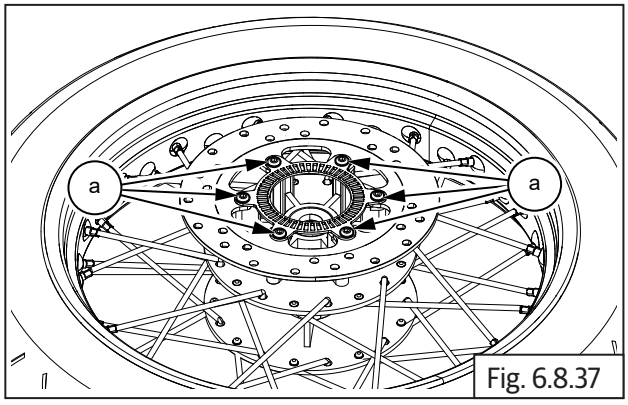

Fig. 6.8.37

	5 mm Allen socket with Ratchet

- Remove ABS toner wheel **(a)** from rear wheel RH.

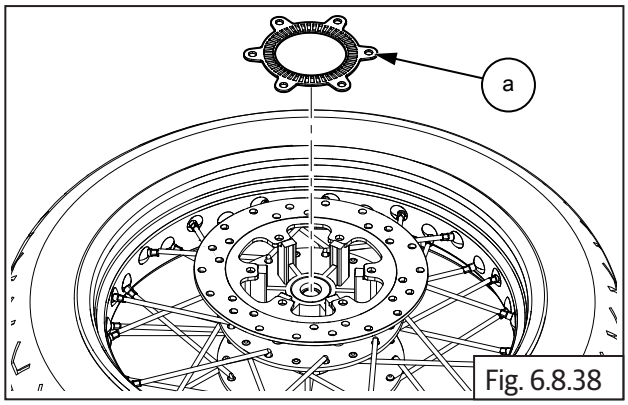

Fig. 6.8.38

- Remove rear brake disc **(a)** from the rear wheel hub RH **(b)**.

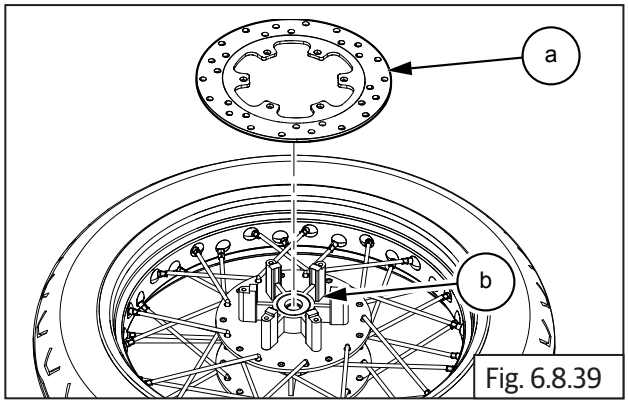

Fig. 6.8.39

- Remove grease seal **(a)**.

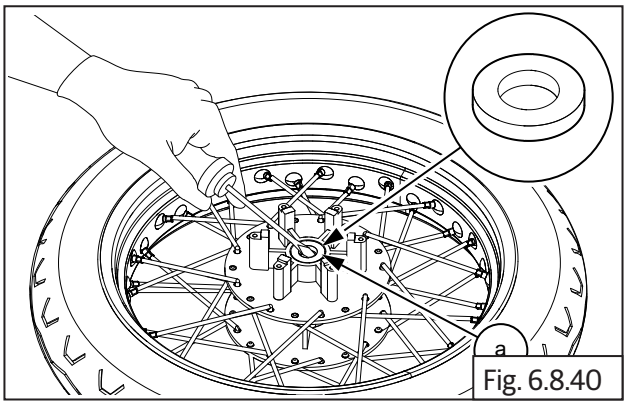

Fig. 6.8.40

	Connector

- Insert a punch **(a)** into hub **(b)** from LH side and drive out bearing RH **(c)**.

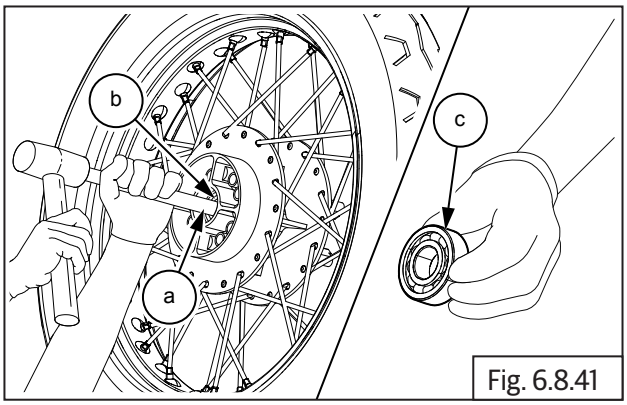

Fig. 6.8.41

	Punch and Mallet

- Remove spacer **(a)** from the rear wheel hub RH.

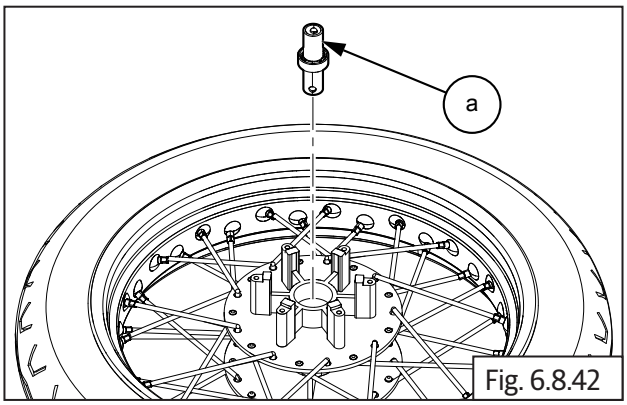

Fig. 6.8.42

- Locate a suitable pointed punch **(a)** on hole in spacer from RH of hub **(b)** to remove bearing LH **(c)**.

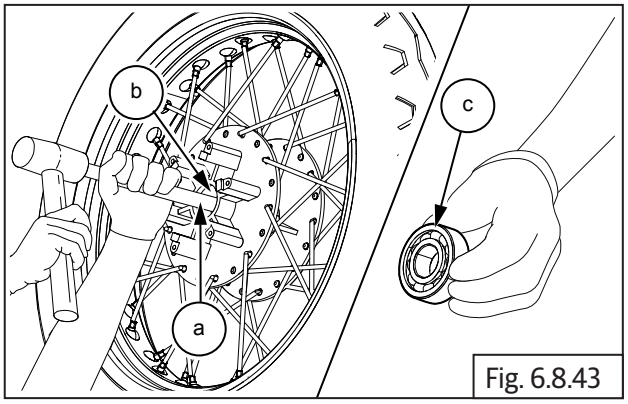

Fig. 6.8.43

	Punch and Mallet

- Gently tap to remove spacer **(a)** from sprocket carrier **(b)**.

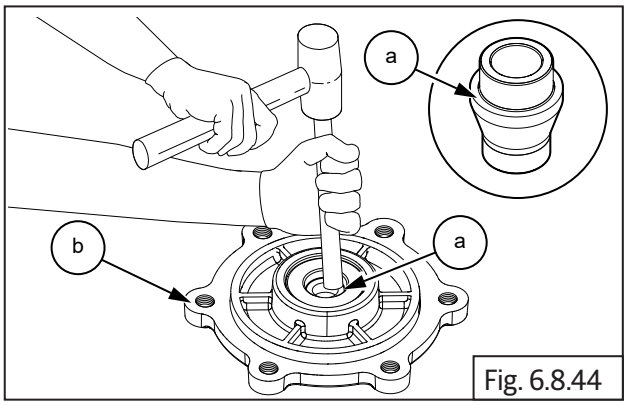

Fig. 6.8.44

	Punch and Mallet

⚠ CAUTION

DO NOT apply excessive force to remove the bearing, spacer as it may cause damage.

- Gently remove grease seal **(a)** from the sprocket carrier **(b)**.

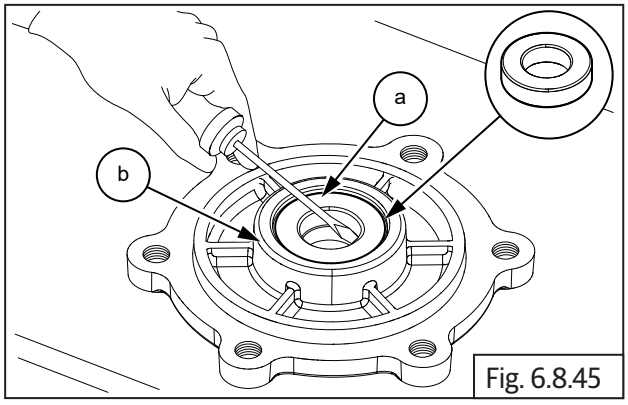

Fig. 6.8.45

	Connector

- Gently remove bearing (6005) **(a)** from the sprocket carrier **(b)**.

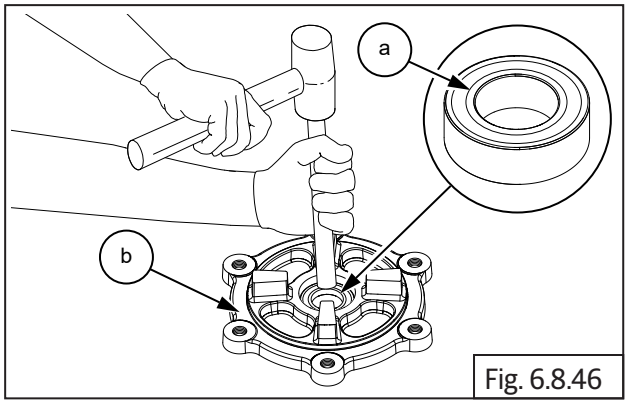

Fig. 6.8.46

Inspection

6.8.5. Front Wheel and Brake Disc

- Inspect tyre condition and wheel rim for any damages or bends and replace if out of specifications.

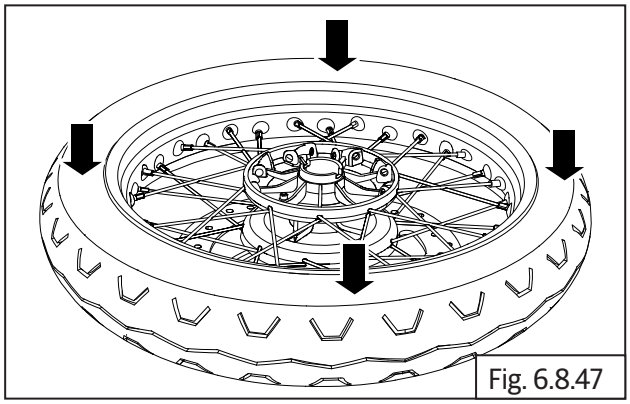
Fig. 6.8.47

- Inspect and replace spindle **(a)** if it has excess wear, rust or bends.

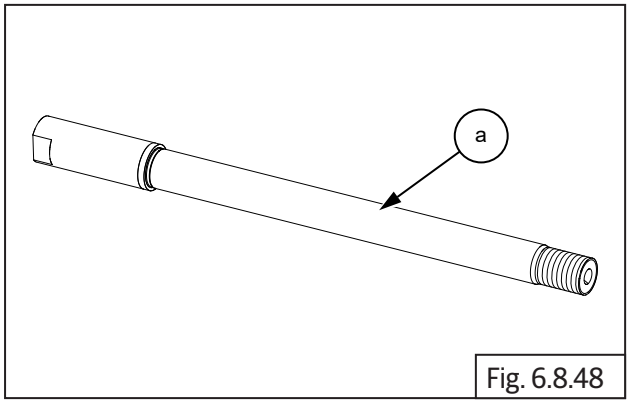

Fig. 6.8.48

- Check tyres for any uneven wear out and the sipes on the center of the tyre is above the TWI index.

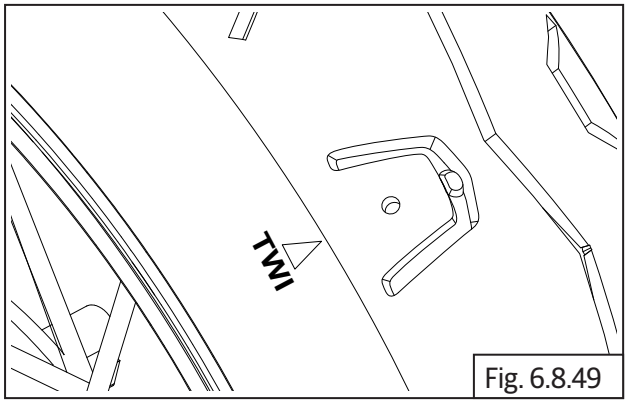

Fig. 6.8.49

	Tyre depth gauge

- Check noise and play on bearing LH and RH.

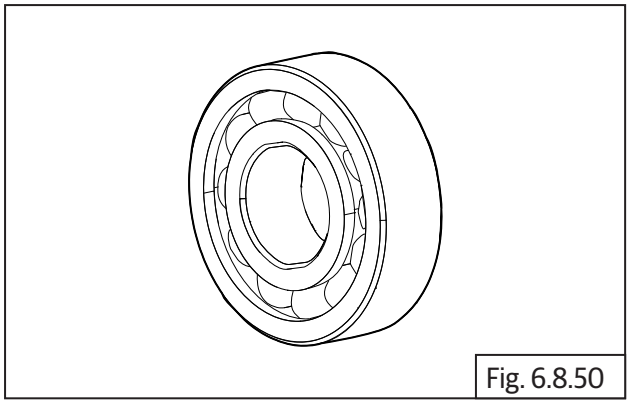
Fig. 6.8.50

- Check and replace wheel spacer if it has excess wear-out.

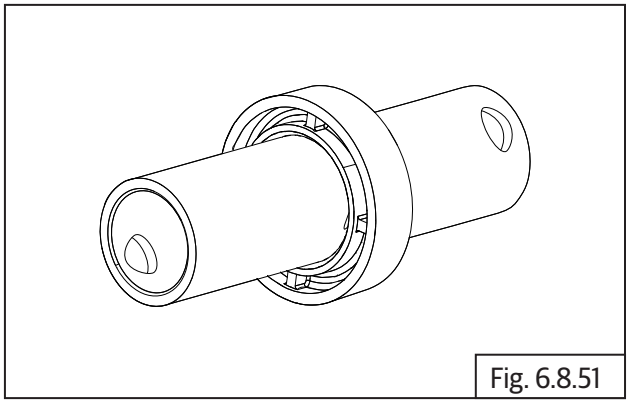

Fig. 6.8.51

- Check if wheel hub assembly is cracked or damaged and replace.
- Check and replace wheel hub bearing seated portion if there is any scoring.

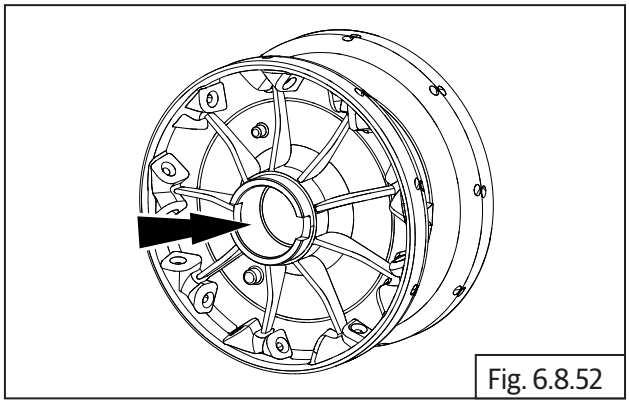

Fig. 6.8.52

- Inspect wheel rim run out / face out and replace if out of specifications.

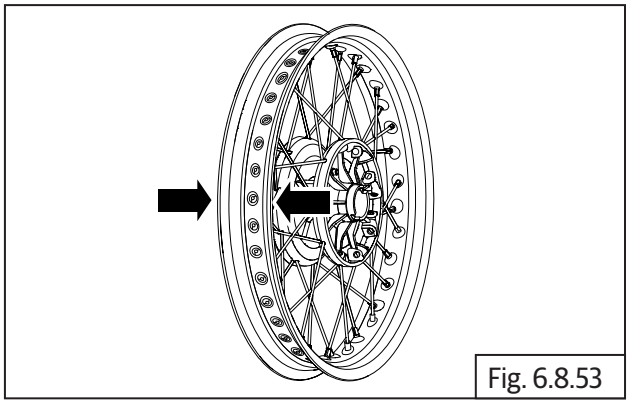

Fig. 6.8.53

Service limit:	1 mm

- Inspect condition of wheel spokes and wheel rim for any damages or bends and loose ends. Replace if necessary.

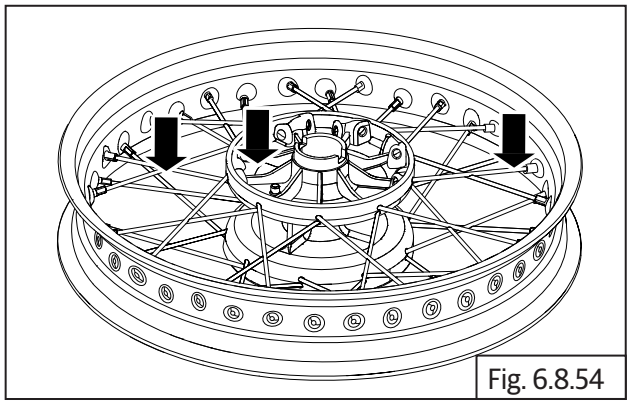

Fig. 6.8.54

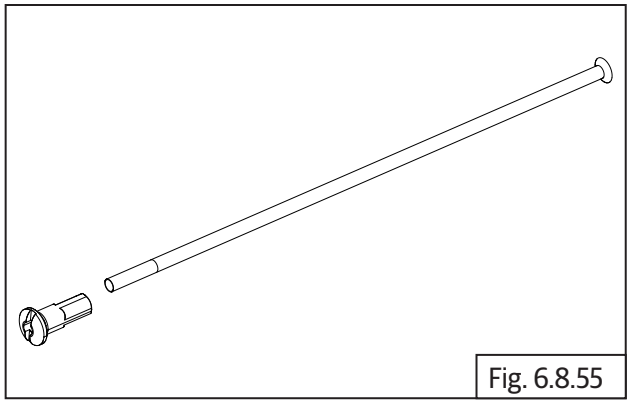

Fig. 6.8.55

- Inspect for rust, deep scoring, any foreign materials, burn marks crack in the mounting location of brake disc.
- Inspect brake disc thickness and run-out. Measure depth at points where scoring is found on the discs and replace if there is excess wear.
- Also measure thickness at the points indicated in the illustration and replace disc if out of specifications.

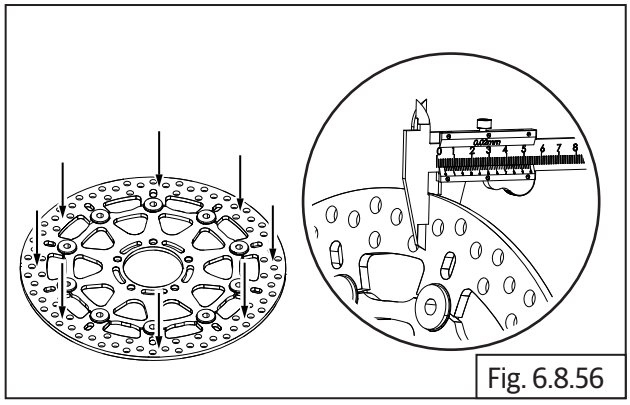

Fig. 6.8.56

	Vernier caliper

Service limit:	0.8 mm

- Place brake disc rotor on a flat surface and inspect warpage. Replace if it is out of specifications.

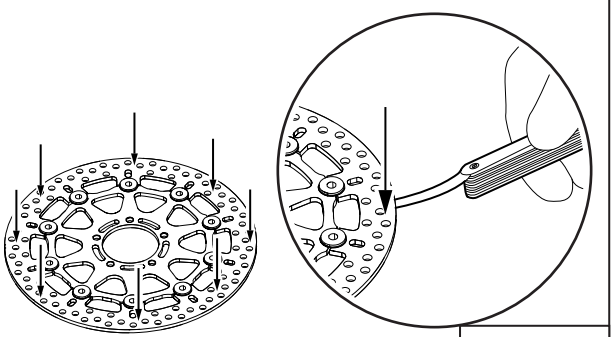

Fig. 6.8.57

	Feeler gauge

Standard:	0.00mm
Service limit:	0.10mm

- Inspect and replace toner wheel plate if there are any damages or bends.

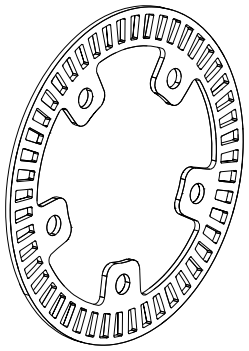

Fig. 6.8.58

- After assembly of brake disc **(a)** into front wheel, insert spindle into rim, fix on wheel balance frame **(c)** and rotate rim to check the disc run-out with dial gauge **(b)**. Ensure run-out is within specified service limits.

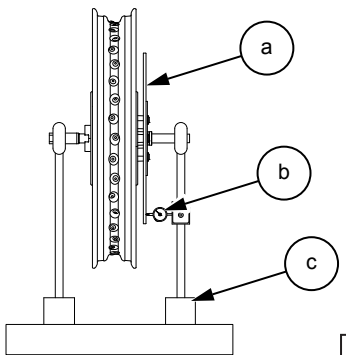

Fig. 6.8.59

Service limit:	0.10 mm

- Similarly check run-out of front and rear wheels.

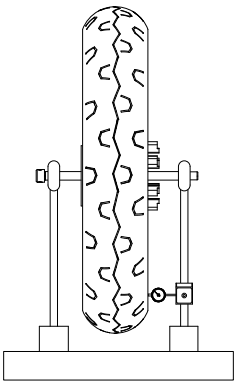

Fig. 6.8.60

	Dial gauge

Service limit:	1 mm

NOTE
• *Run-out of brake disc should be checked only when brake disc is assembled on wheel hub.*

6.8.6. Rear Wheel and Brake Disc

- Inspect tyre condition and wheel rim for any damages or bends and replace if doesn't meet the specifications.

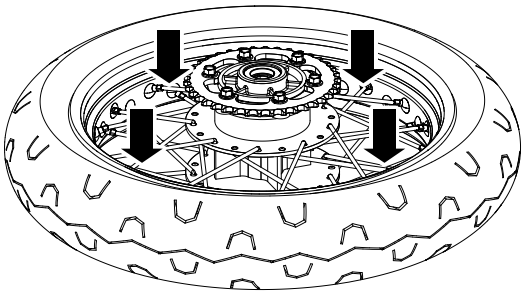

Fig. 6.8.61

- Inspect and replace spindle **(a)** if it has excess wear, rust or bends.

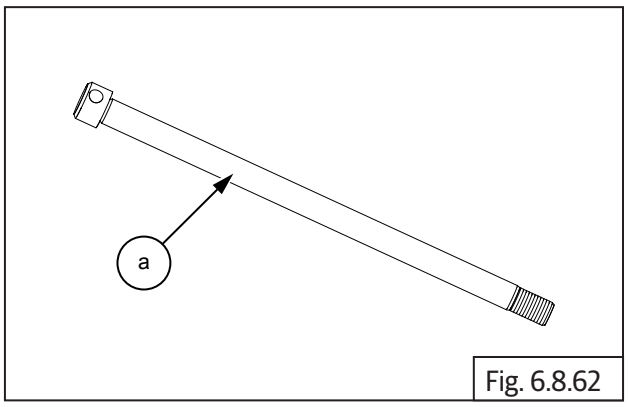

Fig. 6.8.62

- Check noise and play on bearing LH and RH. Replace if necessary.

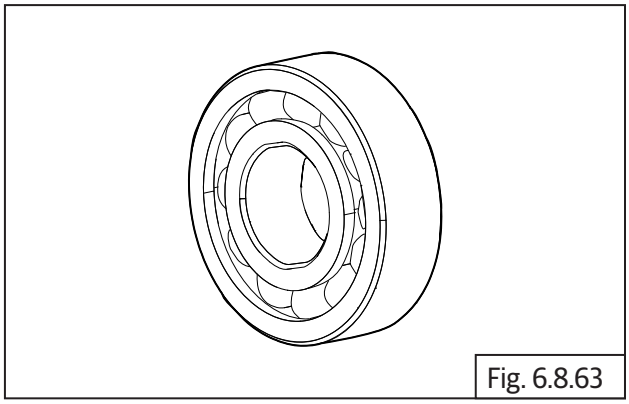

Fig. 6.8.63

- Check and replace spacer if it has excess wear-out.

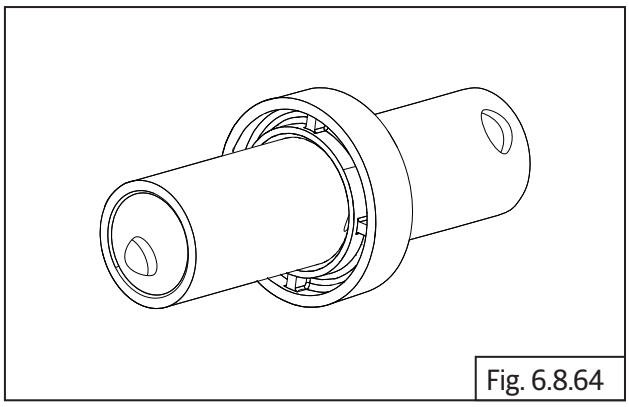

Fig. 6.8.64

- Inspect ABS toner wheel **(a)** for any bends or damages.
- Place ABS toner wheel on a flat surface and check warpage. Replace if out of specifications.

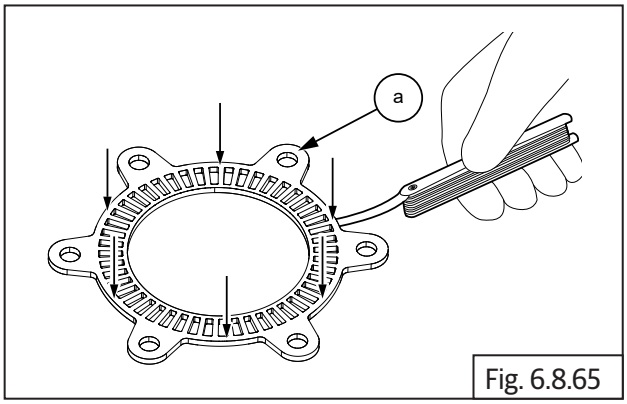

Fig. 6.8.65

	Feeler gauge

Standard:	0.00 mm
Service limit:	0.10 mm

- Inspect for rust, deep scoring, any foreign materials, burn marks crack in the mounting location of brake disc.
- Inspect brake disc thickness and run-out. Measure depth at points where scoring is found on the discs and replace if there is excess wear.
- Also measure thickness at the points indicated in the illustration and replace disc **(a)** if out of specifications.

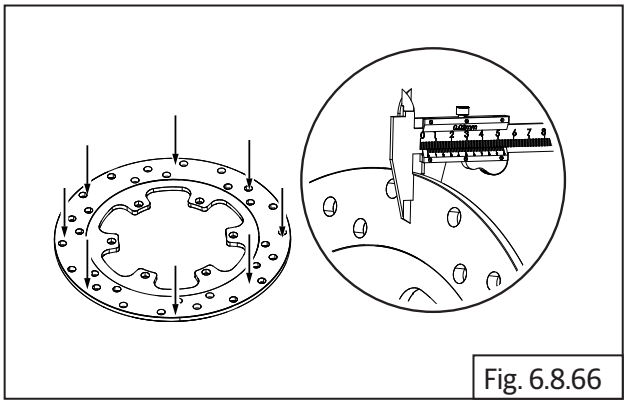

Fig. 6.8.66

	Vernier caliper

Service limit:	0.8 mm

- Place brake disc rear on a flat surface and check warpage. Replace if out of specifications.

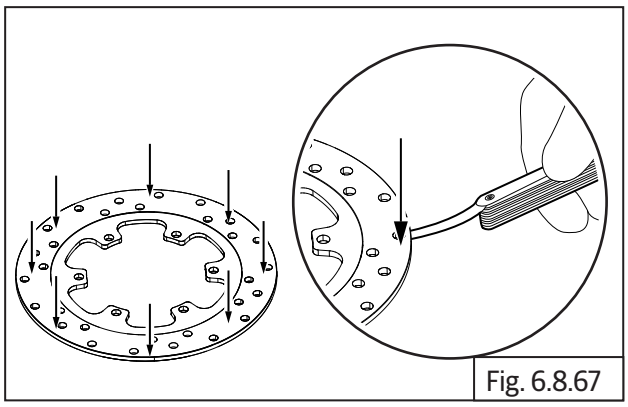

Fig. 6.8.67

	Feeler gauge

Standard:	0.00 mm
Service limit:	0.10 mm

- Inspect wheel hub assembly for any cracks or damages. Replace if out of specifications.
- Inspect if hub bearing seating portion has scoring. Replace if out of specifications.

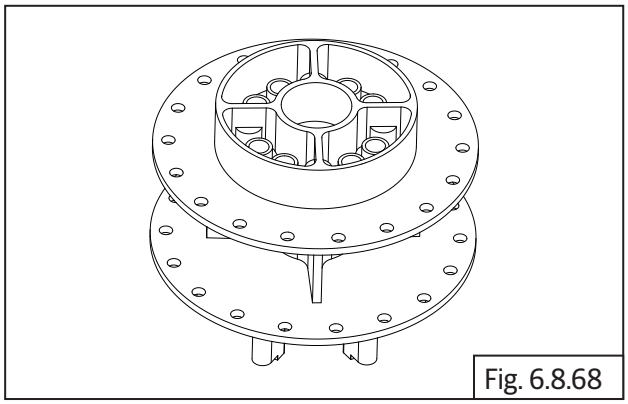

Fig. 6.8.68

- After assembly of brake disc **(a)** into front wheel, insert spindle into rim, fix on wheel balance frame **(b)** and rotate rim to check the disc run-out with dial gauge **(c)**. Ensure run-out is within specified limits.

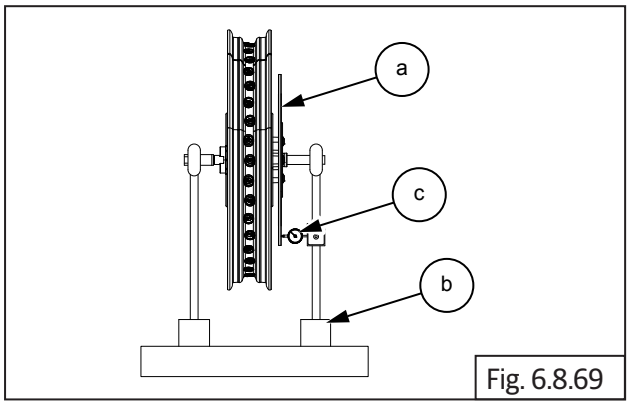

Fig. 6.8.69

⚠ CAUTION

Run-out of brake disc should be checked only when brake disc is assembled on wheel hub.

- Similarly check run out of front and rear wheel.

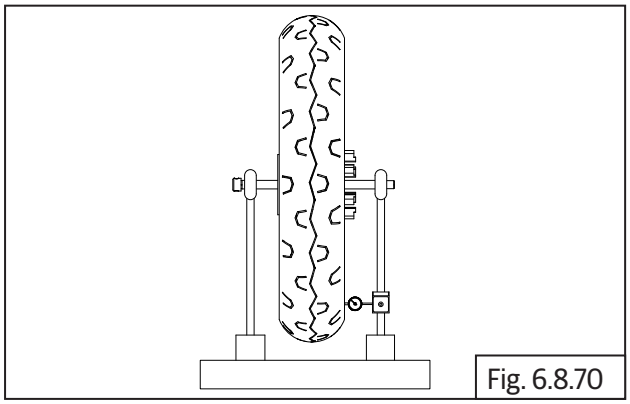

Fig. 6.8.70

	Dial gauge

Service limit:	1 mm

- Inspect condition of wheel spokes and wheel rim for any damages or bends and loose ends. Replace if necessary.

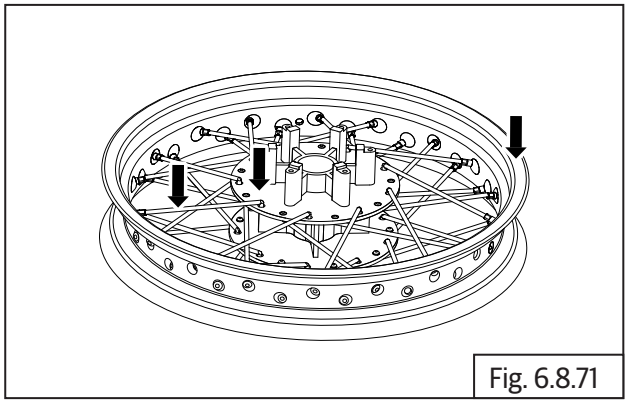

Fig. 6.8.71

- Inspect and replace spokes if it has excess wear, rust or bends.

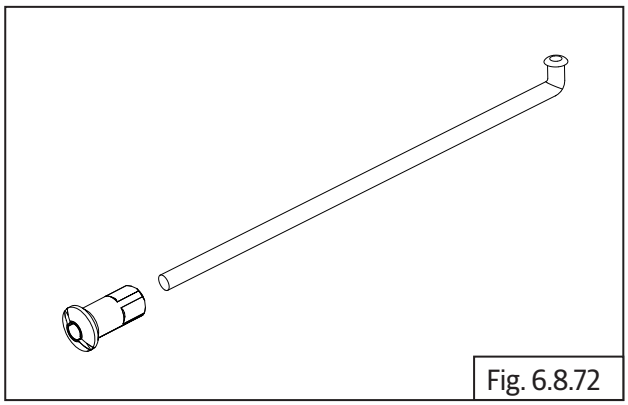

Fig. 6.8.72

- Check rear wheel hub cushion rubbers for any wear-out or damages.

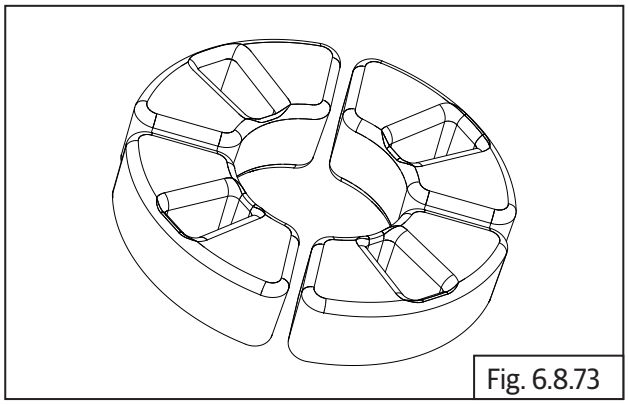

Fig. 6.8.73

- Check tyres for any uneven wear out and the sipes on the center of the tyre is above the TWI index.

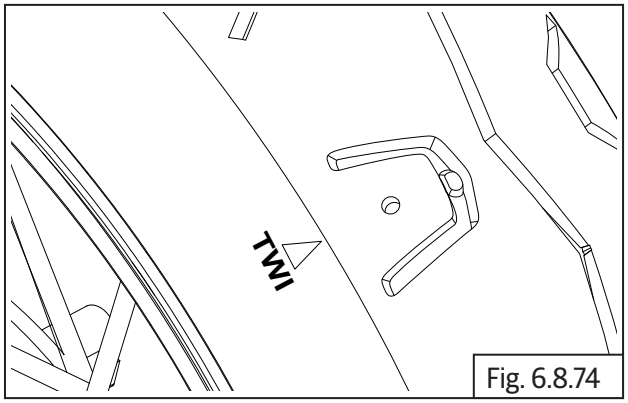

Fig. 6.8.74

	Tyre depth gauge

Assembly

6.8.7. Tyre Assembly On Wheel Rim

- Ensure the tyre is assembled on the wheel rim with the arrow on the tyre side wall is facing towards the front.
- Inflate tyre to the recommended pressure and ensure the tyre is evenly seated in the rim on both LH and RH sides.

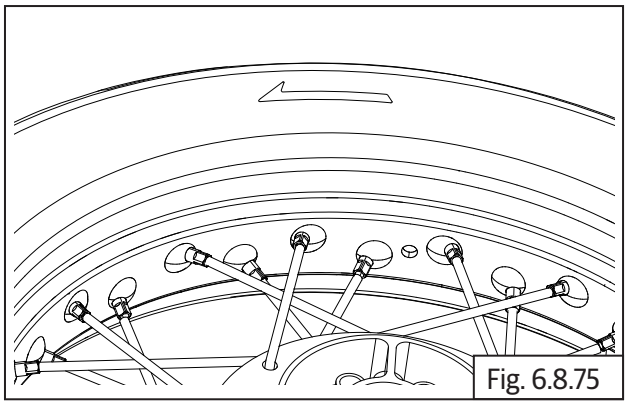

Fig. 6.8.75

6.8.8. Rear Wheel and Brake Disc

- Locate bearing LH **(a)** into rear wheel hub LH **(b)**. Gently tap on the bearing and ensure it is seated properly on the hub.

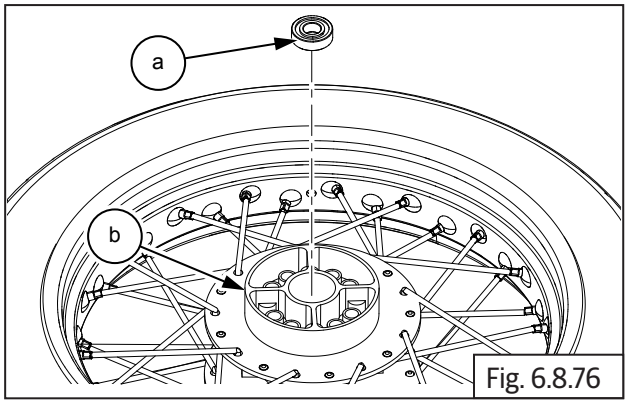

Fig. 6.8.76

	Mallet

- Assemble spacer **(a)** into rear wheel hub RH. Ensure it is properly seated on the bearing surface.

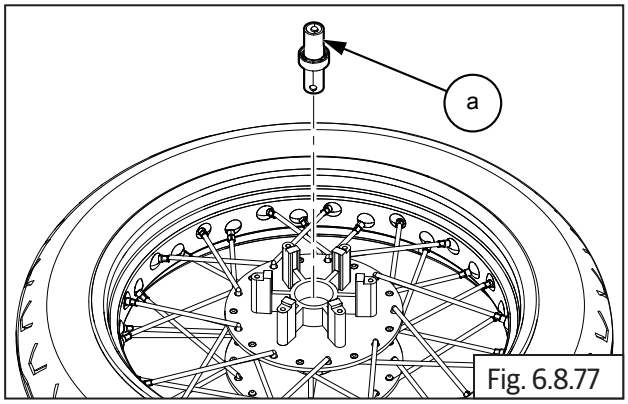

Fig. 6.8.77

- Locate bearing RH **(a)** into rear wheel hub RH **(b)**. Gently tap on the bearing and ensure it is seated properly on the hub.

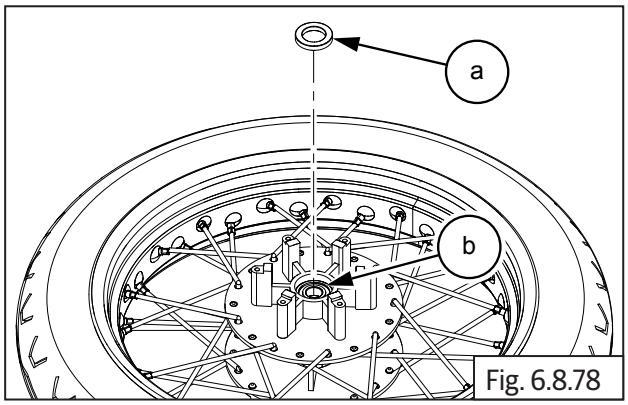

Fig. 6.8.78

- Assemble rear brake disc **(a)** into rear wheel hub RH **(b)**.

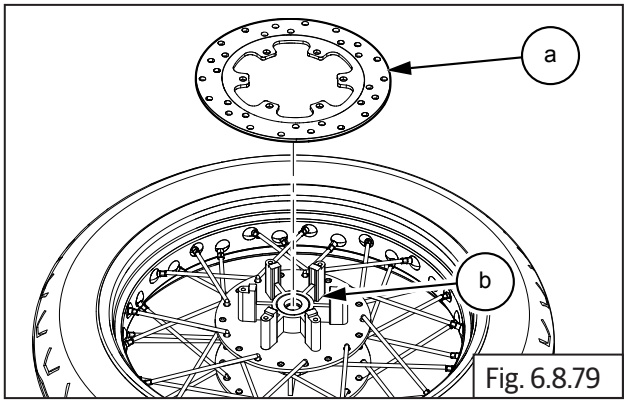

Fig. 6.8.79

- Assemble ABS toner wheel **(a)** into rear brake disc on rear wheel RH.

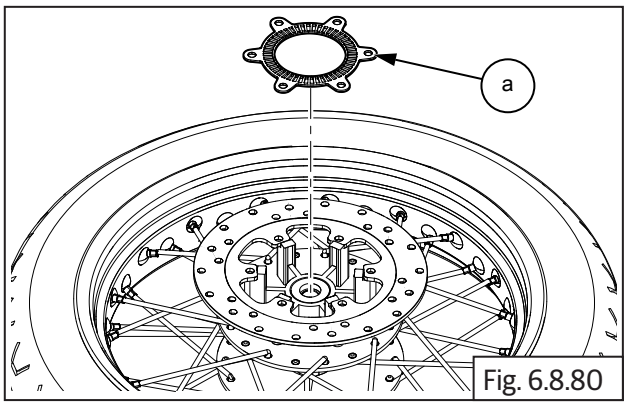

Fig. 6.8.80

- Use recommended sealant on the screws and locate and tighten 6 Nos. Hex head button socket screws **(M6) (a)** into rear wheel disc hub RH.

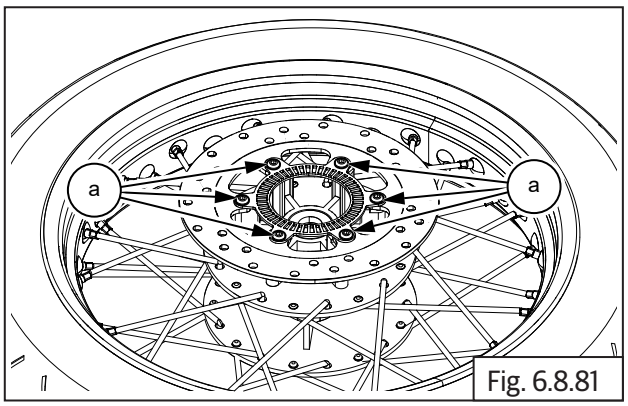

Fig. 6.8.81

	5 mm Allen socket with Ratchet
Torque	25 N-m/2.5 kgf-m

- Clean cushion rubbers seating area and insert 4 Nos. cushion rubbers **(a)** into rear wheel hub LH and gently tap with mallet .

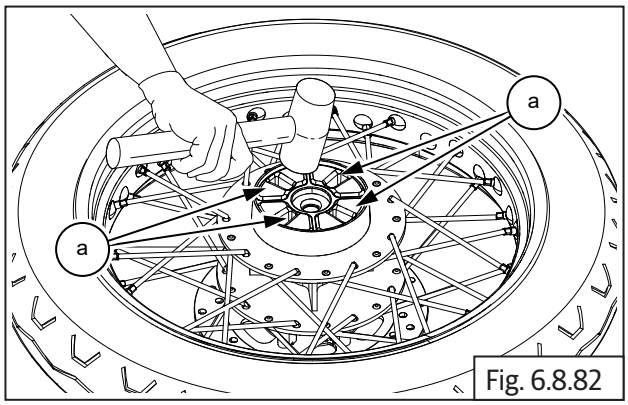

Fig. 6.8.82

	Mallet

NOTE
• *Always use new cushion rubbers as they are for one time usage only.*

- Locate bearing **(a)** into sprocket carrier **(b)**. Ensure it is properly seated on the slot.

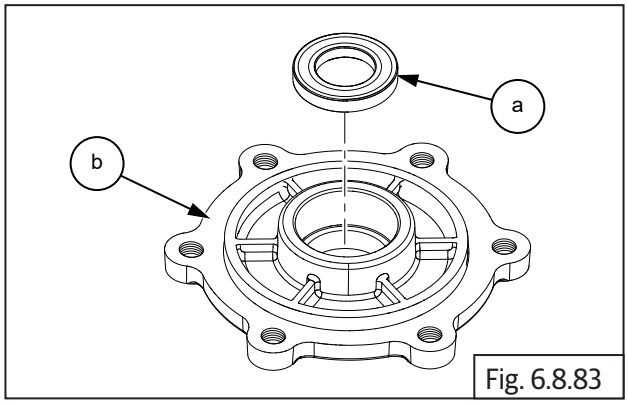

Fig. 6.8.83

- Assemble grease seal **(a)** into sprocket carrier **(b)**.

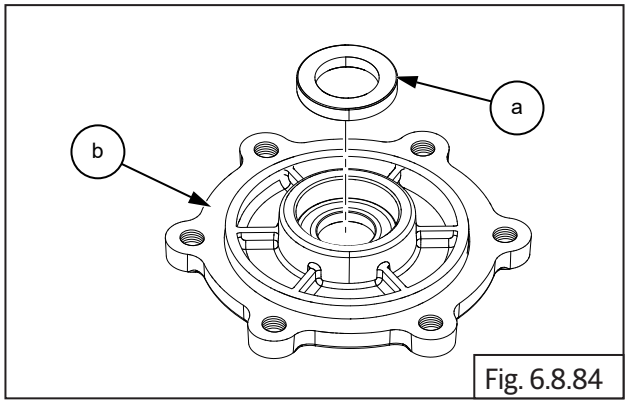

Fig. 6.8.84

- Locate and gently tap the spacer **(a)** into sprocket carrier **(b)**.

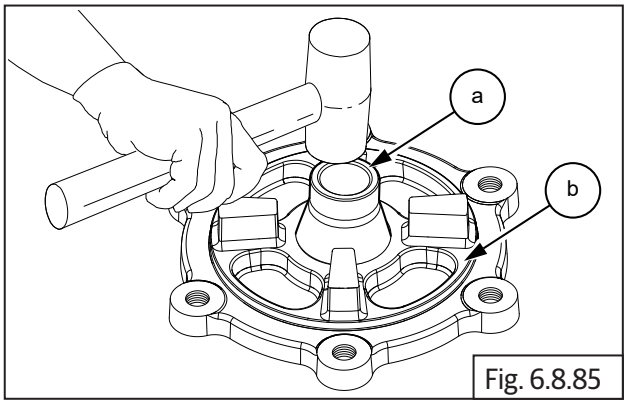

Fig. 6.8.85

	Mallet

- Assemble rear sprocket carrier **(a)** over cushion rubbers into rear wheel hub LH **(b)**.

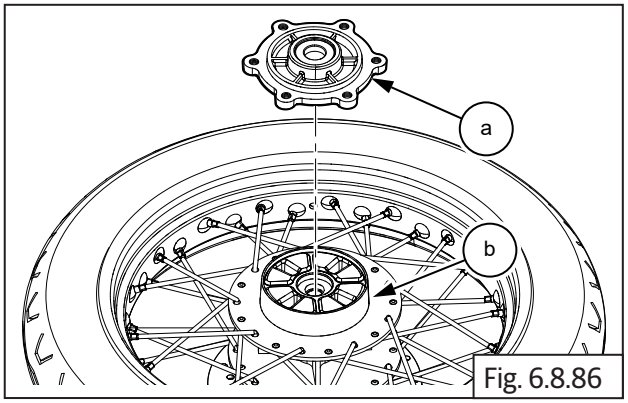

Fig. 6.8.86

- Locate chain drive sprocket **(a)** into sprocket carrier **(b)** on rear wheel hub LH.

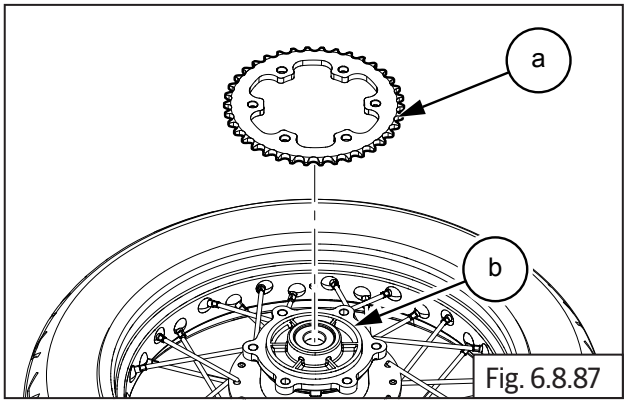

Fig. 6.8.87

- Locate and tighten 6 Nos. Hex flanged socket head bolts **(M8) (a)** into carrier **(b)** on rear wheel LH.

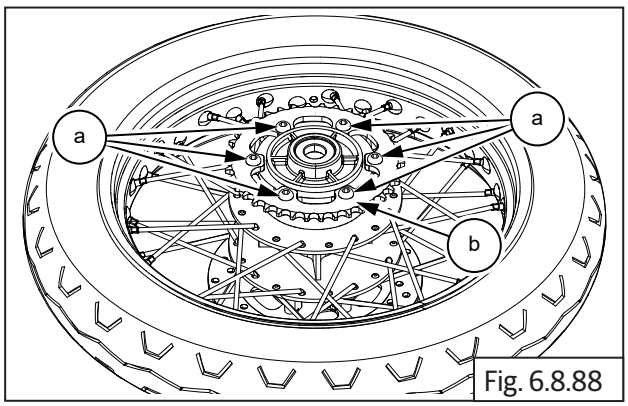

Fig. 6.8.88

	6 mm Allen socket with Ratchet
Torque	45 N-m/4.5 kgf-m

6.8.9. Rear Wheel into Swing Arm

- Gently locate rear wheel **(a)** into swing arm **(b)**.

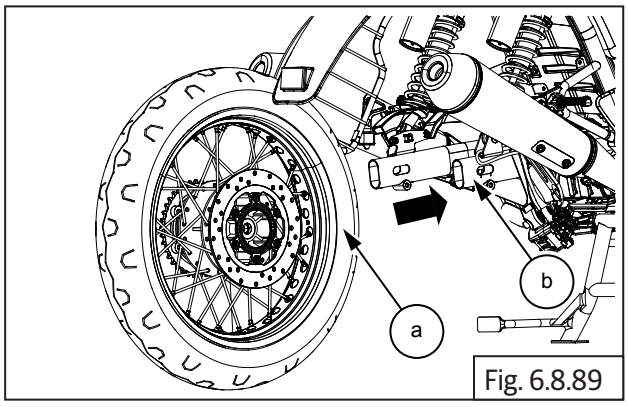

Fig. 6.8.89

- Insert spacer **(a)** into rear wheel hub RH **(b)**.

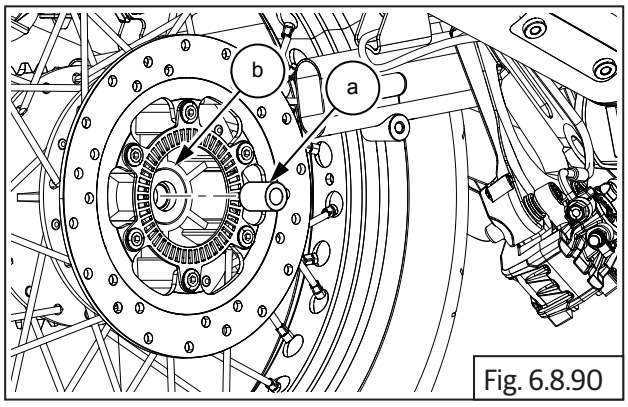

Fig. 6.8.90

- Locate drive chain **(a)** onto sprocket **(b)** and align wheel into swing arm.

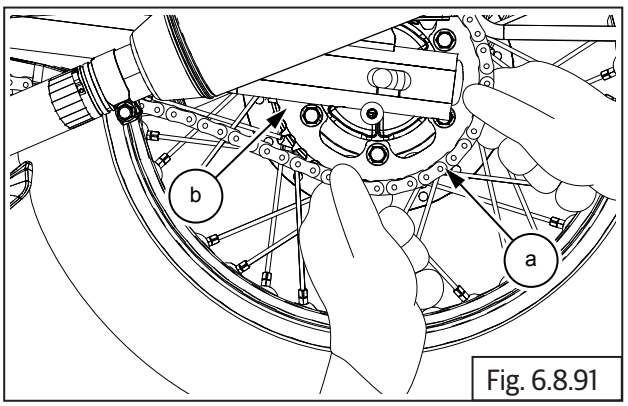

Fig. 6.8.91

- Remove limiter pad and slide brake caliper **(a)** on to brake disc.

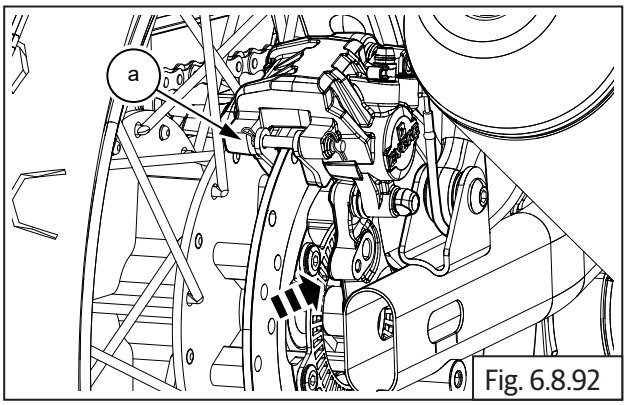

Fig. 6.8.92

- Assemble chain adjuster assembly **(a)** into swing arm LH **(b)**.

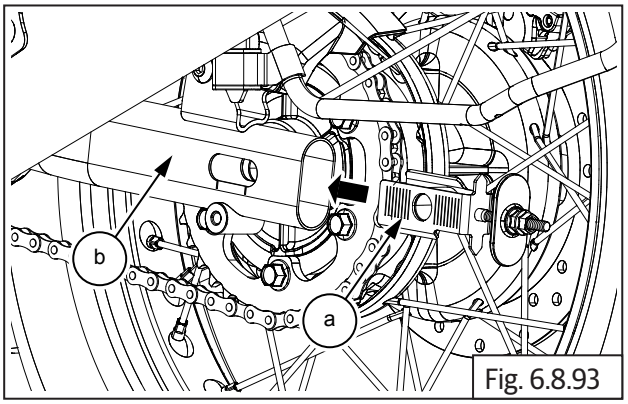

Fig. 6.8.93

- Assemble chain adjuster assembly **(a)** into swing arm RH **(b)**.

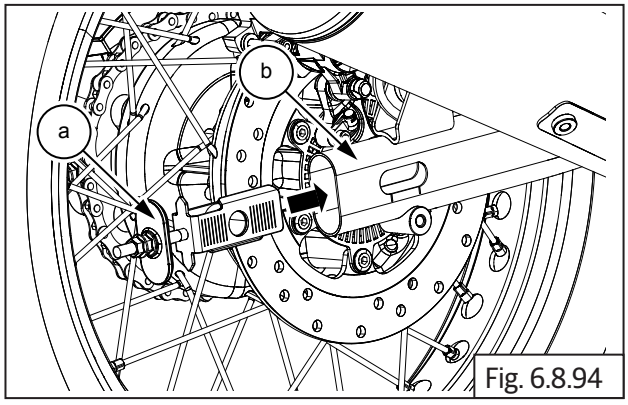

Fig. 6.8.94

- Insert spindle **(a)** with tommy bar into rear wheel hub LH along with washer **(b)**.

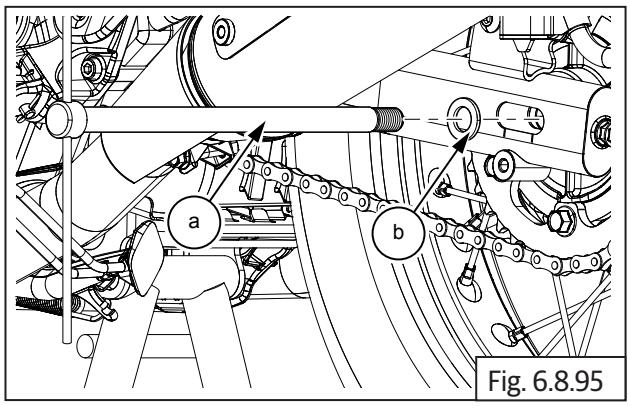

Fig. 6.8.95

	Tommy bar

- Install washer **(a)** into spindle RH **(b)**.

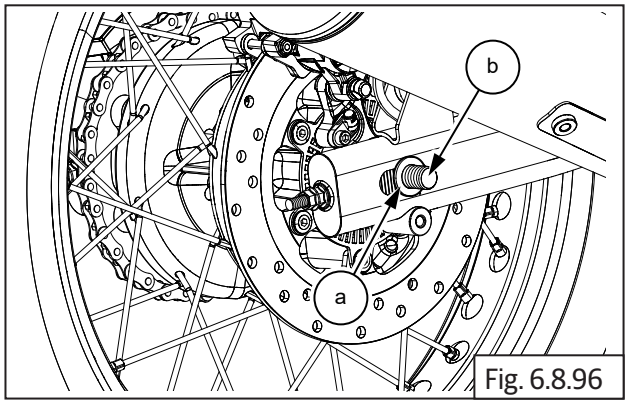

Fig. 6.8.96

- Assemble Hex nut **(M16) (a)** and tighten into swing arm.

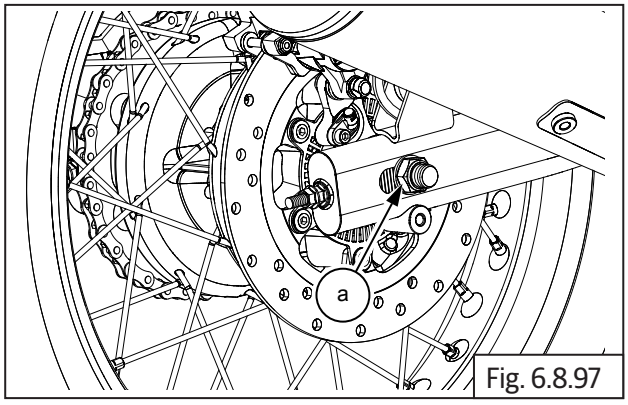

Fig. 6.8.97

	24 mm Socket with Ratchet
Torque	70 N-m/7.0 kgf-m

- After completing rear wheel assembly into motorcycle, ensure chain slack is as per specifications.

6.8.10. Drive Chain Free Play Adjustment

- Inspect chain free play at 3 locations using a ruler. Free play for drive chain should be between 20 mm to 30 mm.

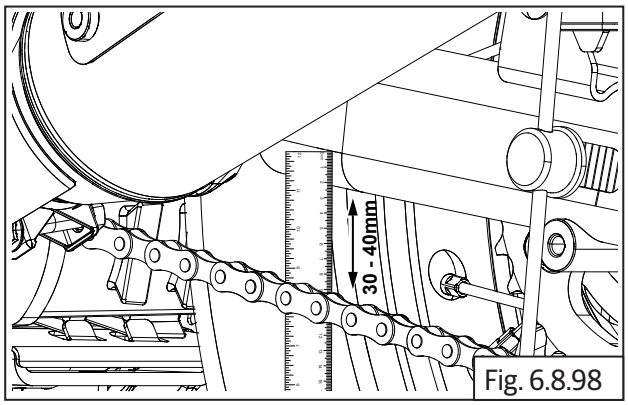

Fig. 6.8.98

- If the free play of the drive chain is not between 20 mm to 30 mm then hold spindle **(a)** on LH using a tommy bar and loosen **(M16) (b)** axle nut on RH.

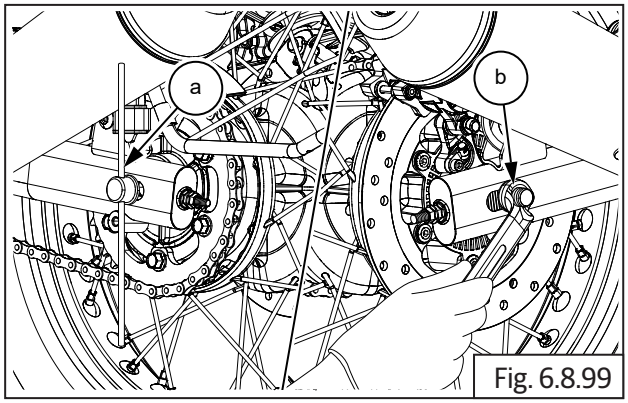

Fig. 6.8.99

	24 mm Ring spanner

- To reduce free play loosen the lock nut **(M8) (a)** in anti clockwise and tighten the adjuster nut **(M8) (b)** in clockwise both LH and RH.

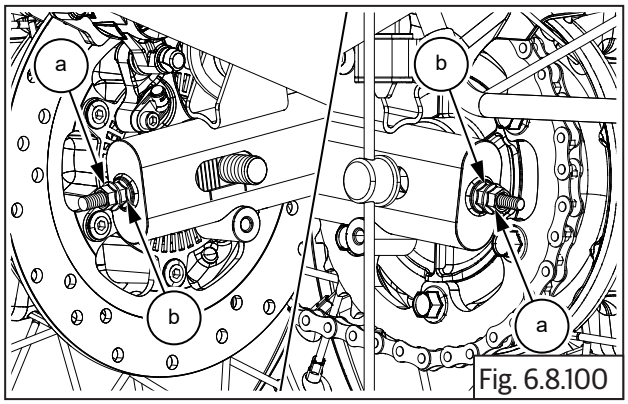

Fig. 6.8.100

	12 mm Double end spanner and Tommy bar

- Ensure the lines are matched with the lines punched in swing arm on both LH & RH side for proper wheel alignment.

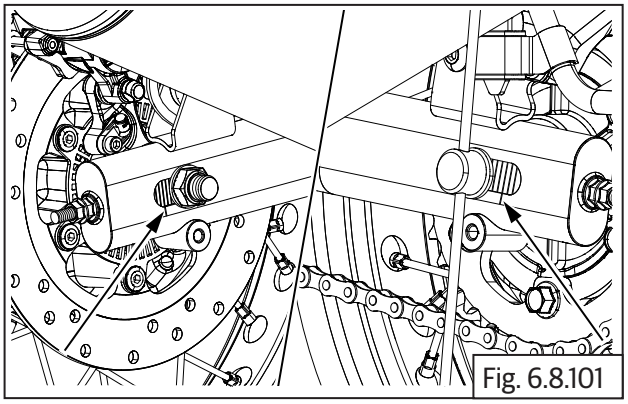
Fig. 6.8.101

- Now measure the drive chain free play using ruler and it should be between 20 mm to 30 mm.

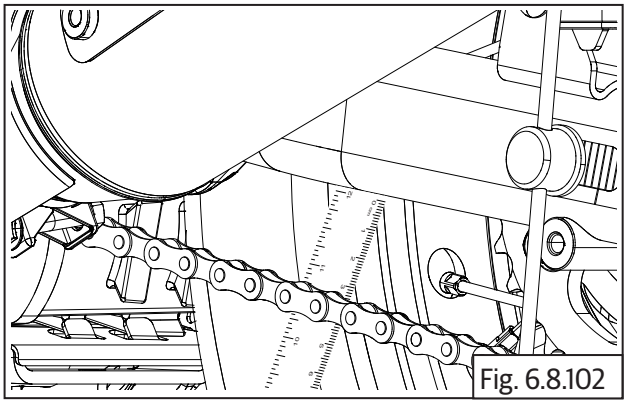
Fig. 6.8.102

⚠ CAUTION

Chain slackness beyond 40 mm will lead to chain slippage or breakage.

- Once chain free play is verified, hold spindle LH with tommy bar **(a)** and tighten the wheel axle nut **(M16) (b)**.

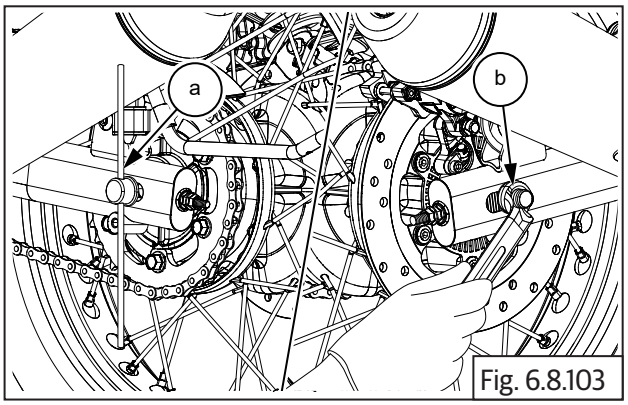

Fig. 6.8.103

	24 mm Ring spanner and Tommy bar
Torque	70 N-m/7.0 kgf-m

6.8.11. Tyre Assembly on Wheel Rim

- Ensure the tyre is assembled on the wheel rim with the arrow on the tyre side wall is facing towards the front.
- Inflate tyre to the recommended pressure and ensure the tyre is evenly seated in the rim on both LH and RH sides.

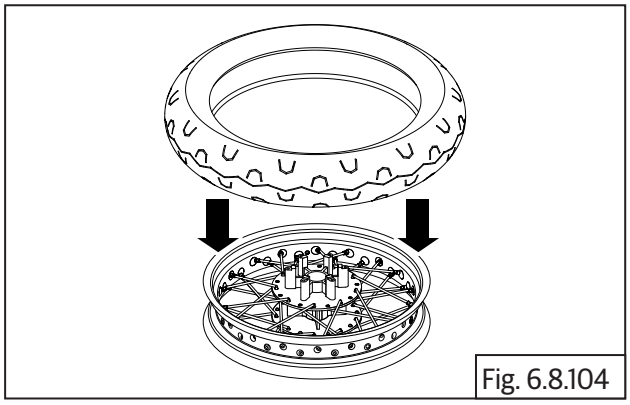

Fig. 6.8.104

6.8.12. Front Wheel and Front Brake Disc

- Locate front brake disc **(a)** on wheel hub with the disc facing up. Ensure six mounting holes are correctly aligned.

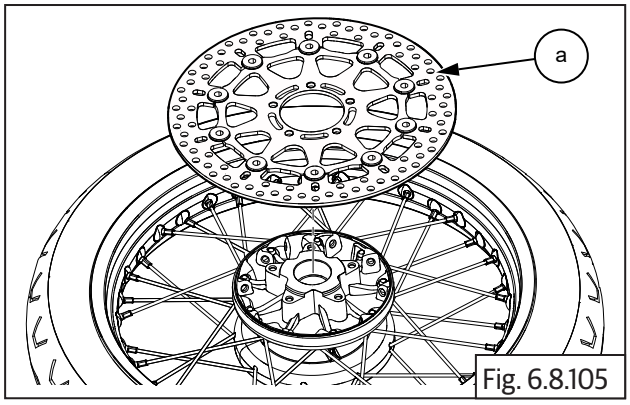

Fig. 6.8.105

- Position toner wheel **(a)** on front disc and ensure mounting holes are correctly aligned.

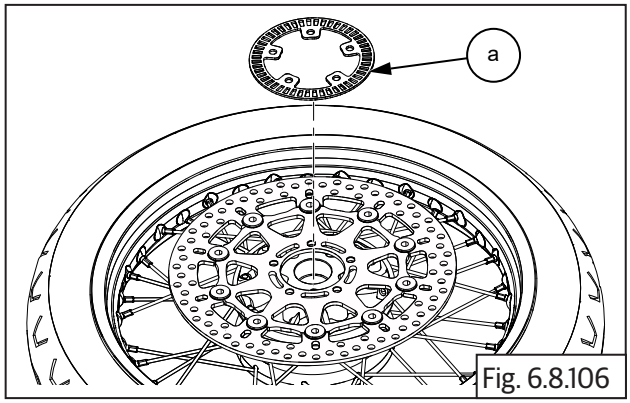

Fig. 6.8.106

- Apply thread sealant on the 5 Nos Hex socket head bolts **(M6) (a)** and allow it to dry for a few minutes.
- Locate the bolts on the mounting holes and tighten toner ring and brake disc to the wheel hub in crisscross patten to specified torque.

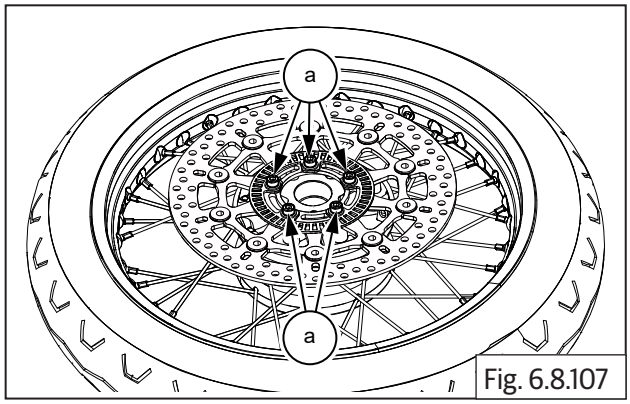

Fig. 6.8.107

	5 mm Allen socket with Ratchet
Torque	10 N-m/1.0 kgf-m

- Insert bearing (6203) **(a)** into front wheel hub RH **(b)**.

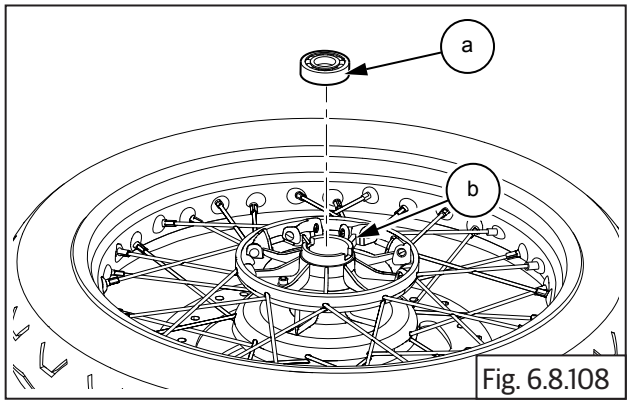

Fig. 6.8.108

- Insert bearing spacer **(a)** from LH side of front hub **(b)**.

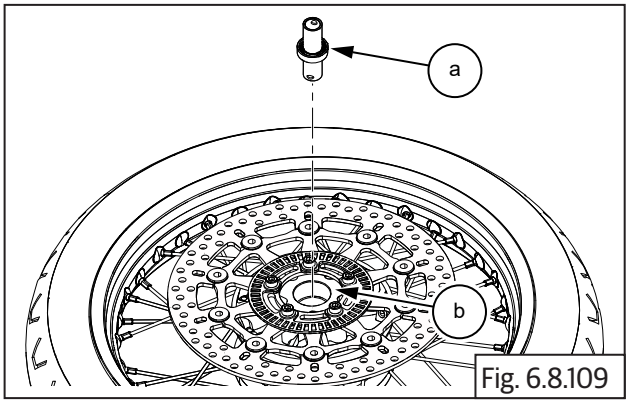

Fig. 6.8.109

- Insert bearing **(a)** into wheel hub LH **(b)**.

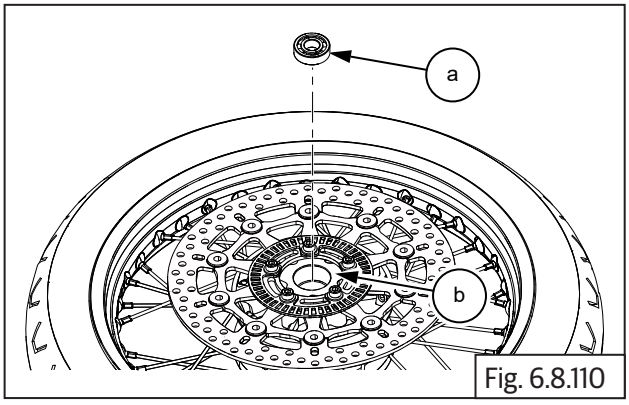

Fig. 6.8.110

- Install grease seal **(a)** into wheel hub LH with seal installer.

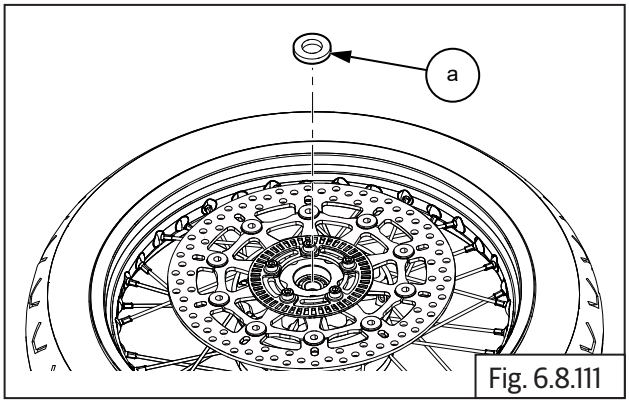

Fig. 6.8.111

	Seal installer

6.8.13. Front Wheel into Front Fork Assembly

- Carefully align front wheel **(a)** into front fork assembly **(b)**.

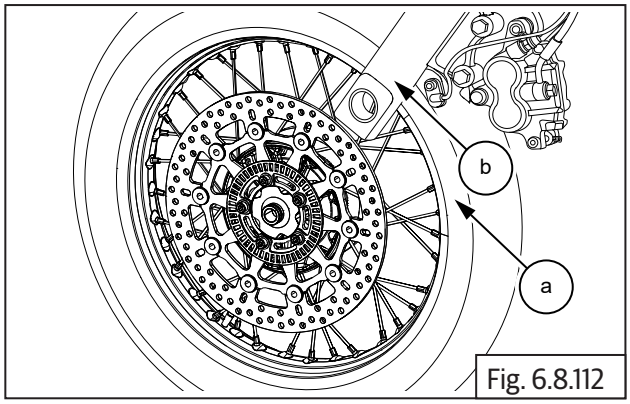

Fig. 6.8.112

- Insert spacer **(a)** in to wheel hub **(b)** from LH.

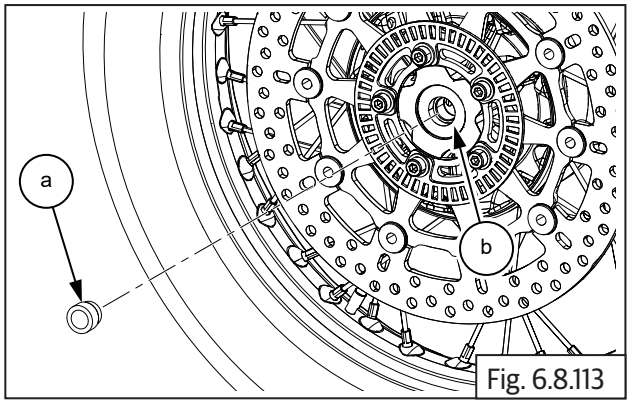

Fig. 6.8.113

- Gently align wheel speed sensor assembly **(a)** between wheel hub **(b)** and the front fork assembly RH **(c)**.

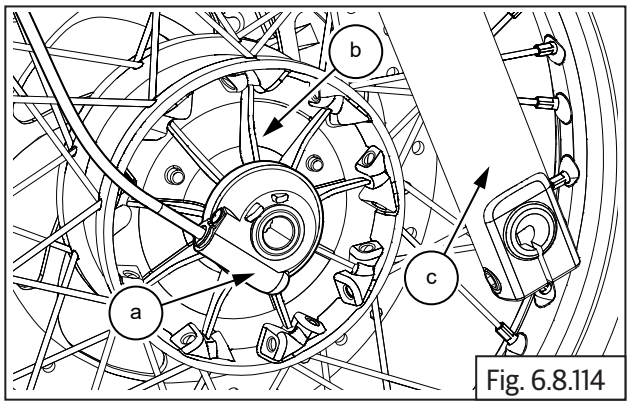

Fig. 6.8.114

- Insert spindle **(a)** into front fork assembly RH and wheel hub **(b)**.

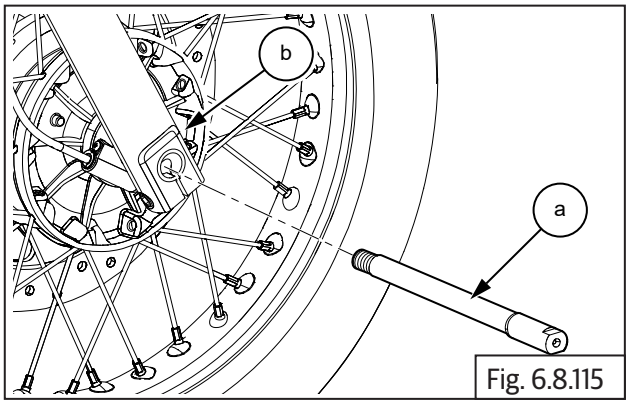

Fig. 6.8.115

- Tighten Hex socket bolt **(M6) (a)** into front fork assembly RH.

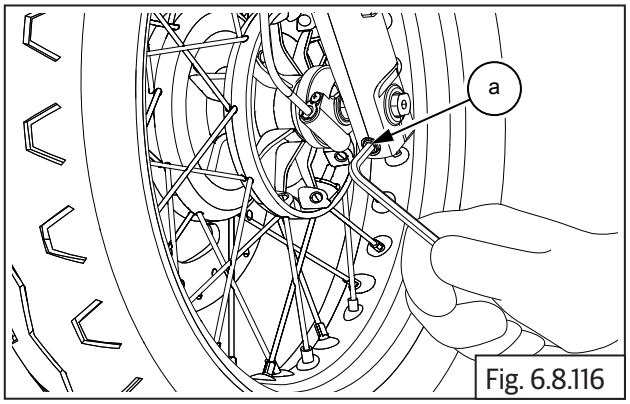

Fig. 6.8.116

	5 mm Allen key

- Insert Hex nut **(M16) (a)** along with washer **(b)** into spindle bolt on LH.
- Hold spindle with spanner from RH and gently tighten Hex nut **(M16) (a)**.

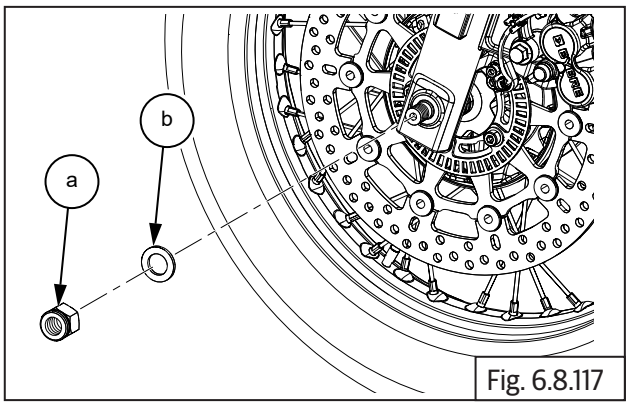

Fig. 6.8.117

	24 mm Socket with Ratchet and 16 mm Double end spanner
Torque	70 N-m/7.0 kgf-m

Troubleshooting

Symptom	Possible Cause	Diagnosis	How To Fix	Recommended Specification
1. Tyres Related				
Centre Threads Wear-Out Is High/ Poor Traction/ Unstable Riding	Tyre pressure is more than recommended.	Front and rear tyre pressure is over inflated.	Ensure correct tyre pressures.	Front tyre: 32 psi/2.2 kg/cm^2. Rear tyre: Solo: 36 psi/2.2 kg/cm^2 With Pillion: 39 psi/2.74 kg/cm^2.
Side Threads Wear-Out Is High/Side Wall Has Cracks/ Motorcycle Has Dragging/Unstable Riding	Tyre pressures is less than recommended.	Front and rear tyre pressures under inflated side walls have minute cracks.	Check inner tubes for any puncture/ leaky valve pins ensure correct tyre pressures.	Front tyre: 32 psi/2.2 kg/cm^2. Rear tyre: Solo: 36 psi/2.2 kg/ cm^2. With Pillion: 39 psi/2.74 kg/cm^2.
Rear Tyre Wear-Out On One Side	Improper wheel alignment.	Rear wheel misaligned with respect to front wheel.	Check and correct wheel alignment.	
Tyre/S Wearing Out Is Uneven/ Motorcycle Is Unstable/Wobbling	Internal defect/poor quality tyre.	Tyres found to have bulges/cracks in side wall. Threads are separated from the tyre.	Replace with Royal Enfield recommended tyres.	Front tyre: 100/90-18, Pirelli Phantom Sports Comp. Rear tyre: 130/70-18, Pirelli Phantom Sports Comp.
	Tyre seating on rims is improper.	Tyre bead is uneven at the rim surface.	Remove tyre and reset correctly.	
	Wheel rims have a defect.	Wheel rims are bent/ have excessive run out.	Remove tyre and carry out proper wheel truing.	
	Rims have excessive side play.	Wheel bearings worn-out/excessive play.	Remove and replace wheel bearings.	

Symptom	Possible Cause	Diagnosis	How To Fix	Recommended Specification
2. Wheel Rims Related				
Motorcycle Is Unstable/Wobbling	Tyre seating on rims is improper	Tyre bead is uneven at the rim surface	Remove tyre and reset correctly	
	Wheel rims are out of trueness	Wheel rims are bent/ have excessive run out	Remove tyre and true the wheel rim correctly	
	Wheel rims have a crack/heavy damage	Wheel rims are cracked/damaged due to impact	Replace with royal enfield genuine wheel rims	
3. Others				
Motorcycle Is Unstable/Wobbling	Spokes are Broken	One/several spokes are broken	Replace spokes and correct wheel trueness	
	Wheels have excessive axial/side play	Wheel bearings are worn-out	Remove bearing and replace	
	Hubs Front/rear are cracked/damaged	Wheel Hubs are damaged due to impact	Replace with Royal Enfield genuine hubs	

NOTE

- *The trouble shooting given in this section is only related to the issues with wheels. For complaints related to other issues such as poor suspension action/handling/unstable ride please refer to suspension (section 6.9).*

SUSPENSION

CONTENTS PAGE

6.9 Suspension 473

Dismantling 473

6.9.1. Front Fork LH and RH Removal from Motorcycle 473

6.9.2. Front Fork Sub Assembly LH and RH 474

6.9.3. Steering Stem Assembly from Frame Head Tube 478

6.9.4. Tapered Bearing Cups from Frame Head Tube 479

6.9.5. Shock absorber 483

6.9.6. Swingarm 485

Inspection 487

6.9.7. Front Fork Leg 487

6.9.8. Front Fork Air Gap Setting 487

6.9.9. Steering Stem 488

6.9.10. Shock absorber 488

6.9.11. Swingarm 489

6.9.12. Top Yoke 489

Assembly 489

6.9.13. Swingarm 489

6.9.14. Shock Absorber 491

6.9.15. Steering Stem Assembly into Frame Head Tube 492

6.9.15. Tapered Roller Bearing Cups on Frame Head Tube 492

6.9.17. Steering Stem on Frame Head Tube 493

6.9.18. Top Yoke on steering stem 494

6.9.19. Front Fork Sub Assembly LH and RH 494

6.9.20. Front Fork LH and RH Assembly on Motorcycle 498

6.9.21. Steering Stem Play Adjustment 500

Troubleshooting 502

Front Fork Assembly Removal from Motorcycle

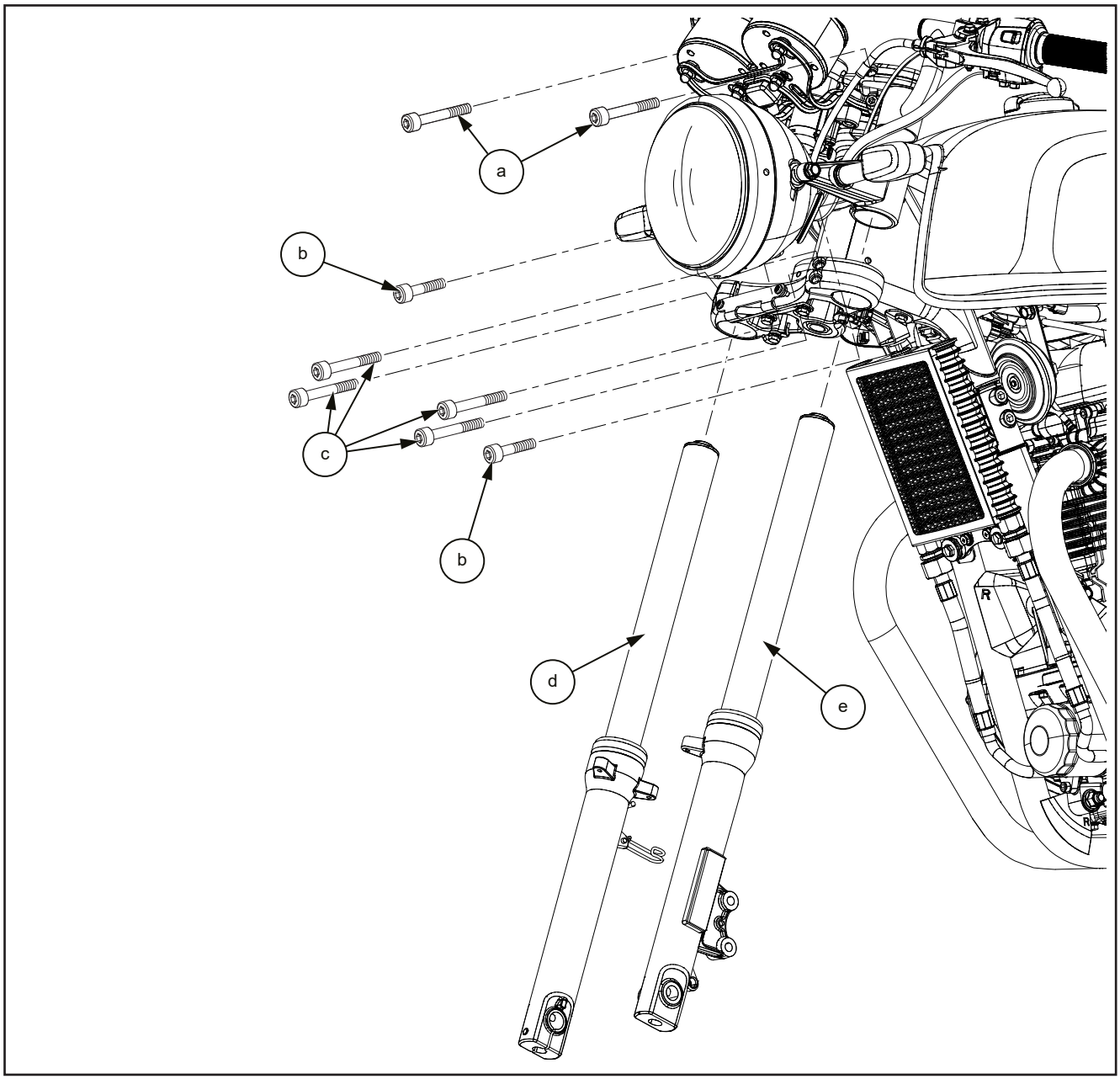

Item No.	Description	Quantity
a	Hex Socket Head Bolt, M8 x 35	2
b	Hex Socket Head Cap Screw, M6 x 20	2
c	Hex Socket Head Bolt M8 x 35	4
d	Fork Assembly RH	1
e	Fork Assembly LH	1

Front Fork LH and RH

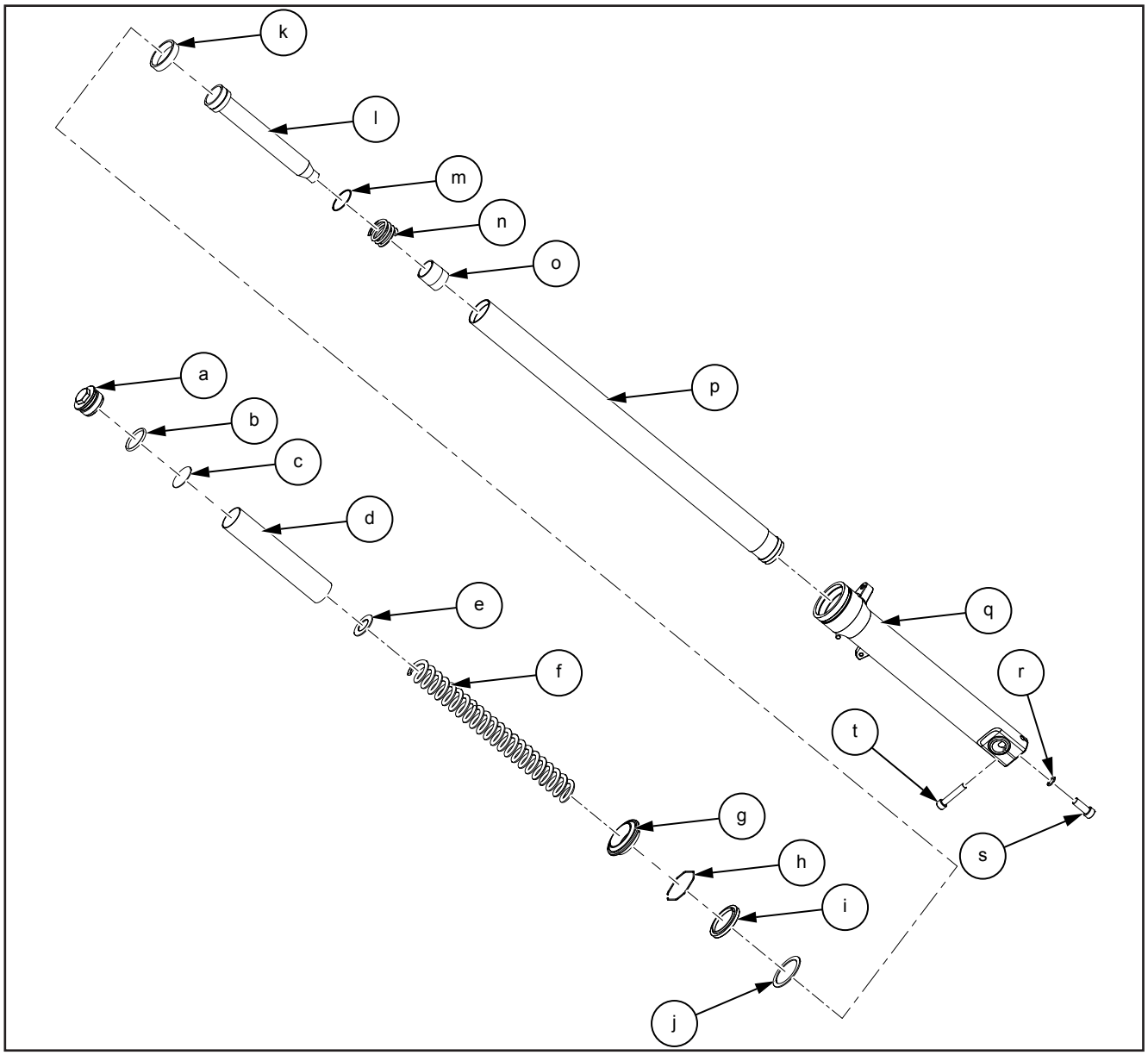

Item No.	Description	Quantity	Item No.	Description	Quantity
a	Front Fork Cap Nut	1	k	Bush	1
b	O-Ring	1	l	Piston Fork	1
c	Washer Plate	1	m	Piston Ring	1
d	Spacer Tube	1	n	Spring	1
e	Washer	1	o	Tapper Oil Lock	1
f	Fork Main Spring	1	p	Outer Tube	1
g	Dust Seal	1	q	Fork End	1
h	Seal Clip	1	r	Washer	1
i	Oil Seal	1	s	Hex Socket Screw	1
j	Bush Washer	1	t	Pinch Bolt Fork RH Side Only	1

Steering Stem

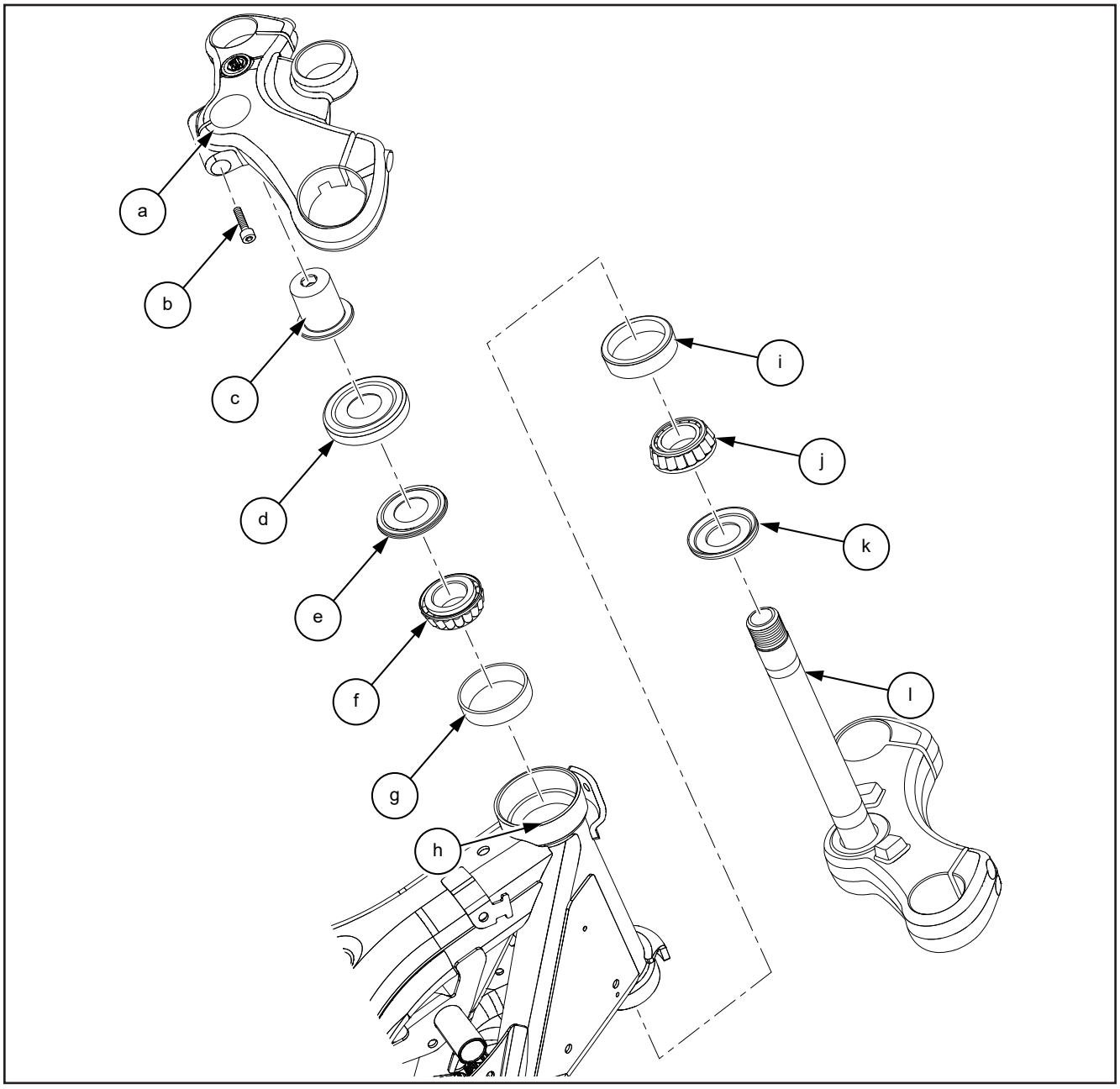

Item No.	Description	Quantity	Item No.	Description	Quantity
a	Top Yoke	1	g	Tapper Roller Bearing Cup	1
b	Pinch Bolt	1	h	Steering Stem Tube	1
c	Stem Nut	1	i	Tapper Roller Bearing Cup	1
d	Cover Headstock	1	j	Tapper Roller Bearing	1
e	Seal Headstock Bearing	1	k	Seal Headstock Bearing	1
f	Tapper Roller Bearing	1	l	Steering Stem	1

Shock absorber

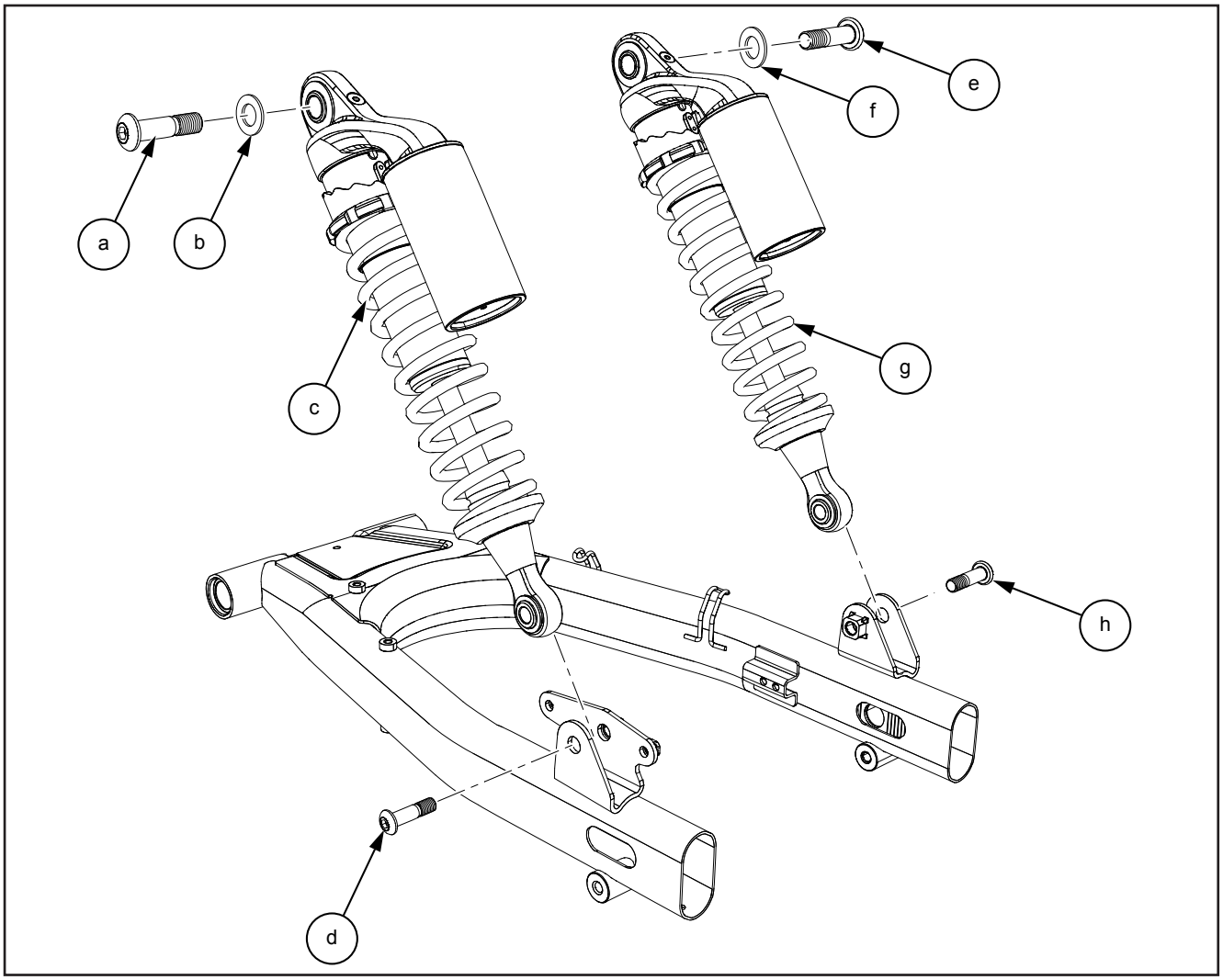

Item No.	Description	Quantity
a	Button Head Bolt, M8 x 1.25 x 16, Locking	1
b	Washer	1
c	Shock absorber Rear LH	1
d	Button Head Bolt, M8 x 1.25 x 16, Locking	1
e	Button Head Bolt, M8 x 1.25 x 16, Locking	1
f	Washer	1
g	Shock absorber Rear RH	1
h	Button Head Bolt, M8 x 1.25 x 16, Locking	1

Swingarm

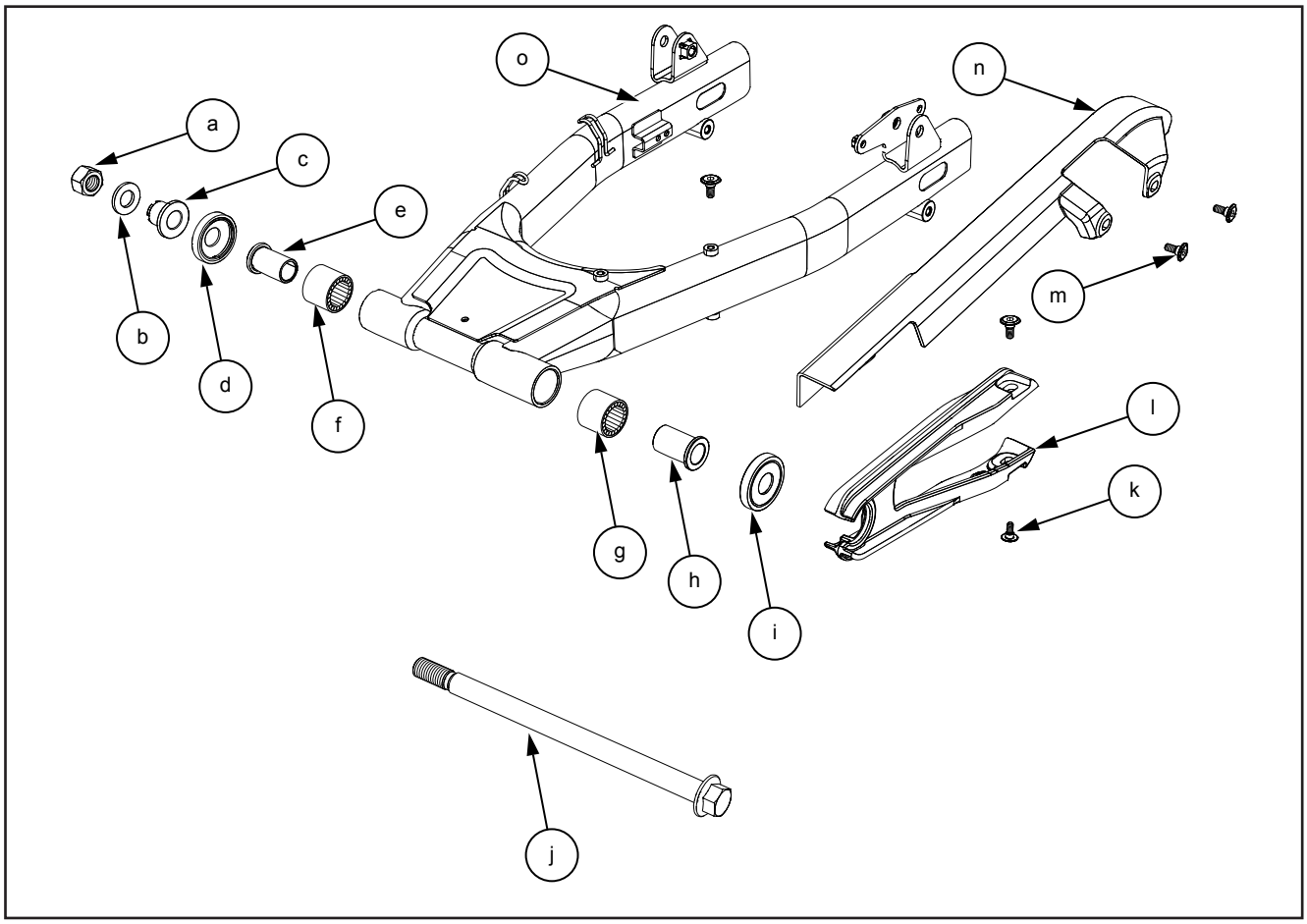

Item No.	Description	Quantity
a	Hex Nut M16	1
b	Washer, Hardened, 16.5 x 30 x 3	1
c	Adjuster, Swingarm	1
d	End Cup, Swingarm	1
e	Bearing Sleeve, Swingarm	1
f	Bearing, Needle Roller, 22 x 28 x 20	1
g	Bearing, Needle Roller, 22 x 28 x 20	1
h	Bearing Sleeve, Swingarm	1
i	End Cup, Swingarm	1
j	Spindle, Swingarm, M16	1
k	Hex Socket Button Head Bolt, M6 x 1 x 15.5	2
l	Chain Rubbing Strip	1
m	Hex Socket Button Head Bolt, M6 x 1 x 15.5	3
n	Chain Guard	1
o	Swingarm, Machined	1

6.9 Suspension

Dismantling

6.9.1. Front Fork LH and RH Removal from Motorcycle

⚠ CAUTION

Ensure the motorcycle is upright on a firm and flat surface.

- Locate a scissor jack **(a)** under cradle frame **(b)** and lift motorcycle such that the front wheel is off the ground by minimum 6 inches (or 15 cm).

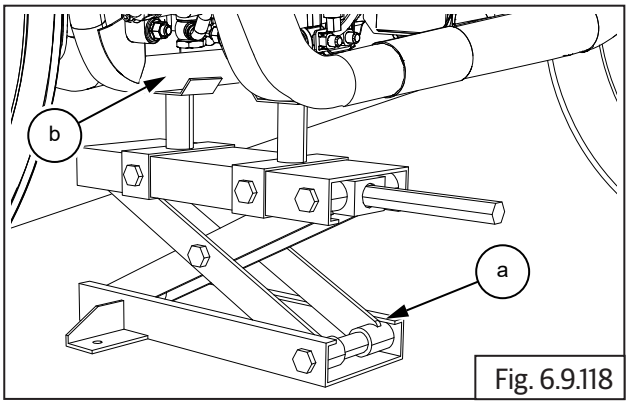

Fig. 6.9.118

- Ensure ignition and stop switch are in off position.
- Remove the following parts:
  - Front wheel (section 6.8.1).
  - Release brake hose and wheel speed sensor wires from the clips (section 9.3.2).
  - Wheel caliper from fork end LH (section 9.1.2). Support caliper suitably.
  - Wheel speed sensor from the fork end LH (section 9.3.2). Support wheel speed sensor suitably.
  - Front mudguard (section 6.6.2).
  - Front number plate (section 6.6.1).
  - Headlamp assembly and housing (section 11.1).
  - Trafficators front (section 11.1.6).
- Loosen fork cap bolts **(M14) (a)** just sufficiently on both LH and RH fork assemblies.

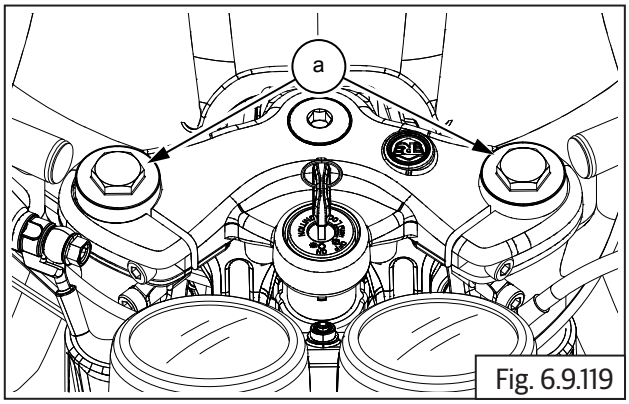

Fig. 6.9.119

	22 mm Ring spanner

- Loosen 4 Nos. Hex socket head bolts **(M8) (a)** sufficiently on LH and RH steering stem.

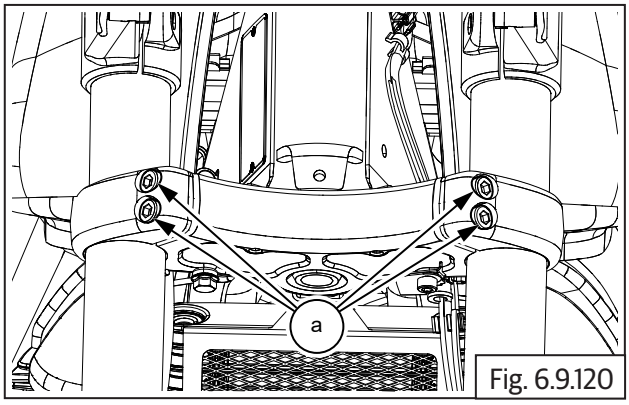

Fig. 6.9.120

	6 mm Allen socket with Ratchet

- Loosen and remove 2 Nos. Hex socket head pinch bolts **(M6) (a)** on the headlamp bracket from LH and RH.

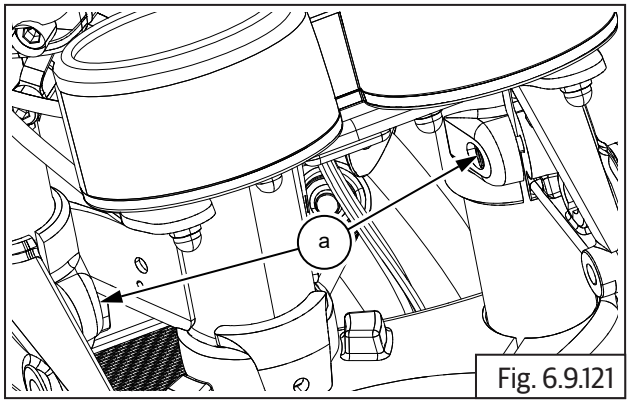

Fig. 6.9.121

	5 mm Allen key

- Loosen 4 Nos. Hex socket head bolts **(M8) (a)** sufficiently on LH and RH on yoke and clip-on.

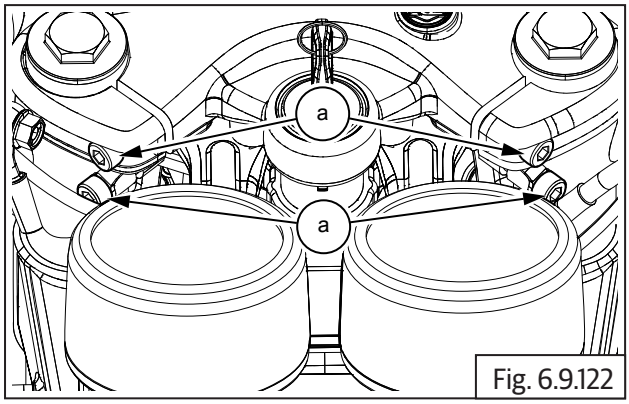

Fig. 6.9.122

	6 mm Allen socket with Ratchet

- Gently rotate and pull out fork assembly LH **(a)** downwards to remove from top yoke and steering stem **(b)**.

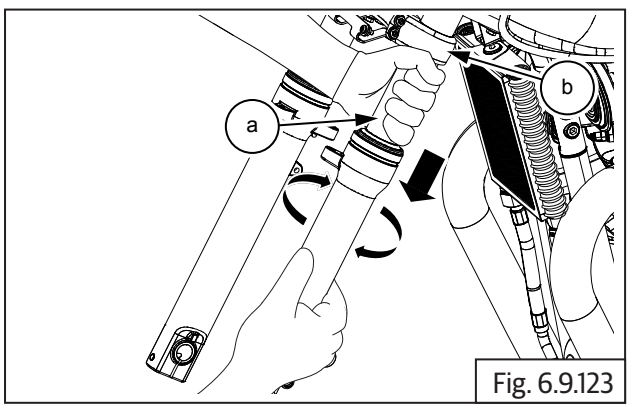

Fig. 6.9.123

⚠ CAUTION

Support headlamp holder while removing fork assembly.

For continental GT models: Support clip on handlebar while removing fork assembly and tag clip on suitably to prevent damage to master cylinder and controls.

- Repeat above steps to remove the fork assembly RH **(a)**.

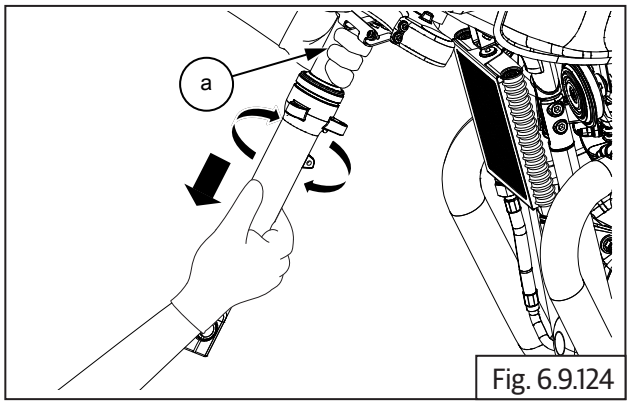

Fig. 6.9.124

6.9.2. Front Fork Sub Assembly LH and RH

⚠ CAUTION

The top cap nut is under pressure from the fork spring. Remove cap nut carefully and slowly while unscrewing from main tube.

- Loosen and remove cap nut **(M14) (a)** along with O-ring from upper end of front fork leg **(b)**.

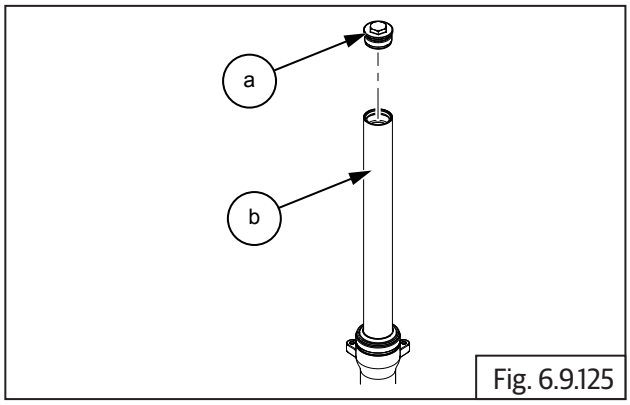

Fig. 6.9.125

	22 mm Ring spanner

- Remove plate **(a)**.

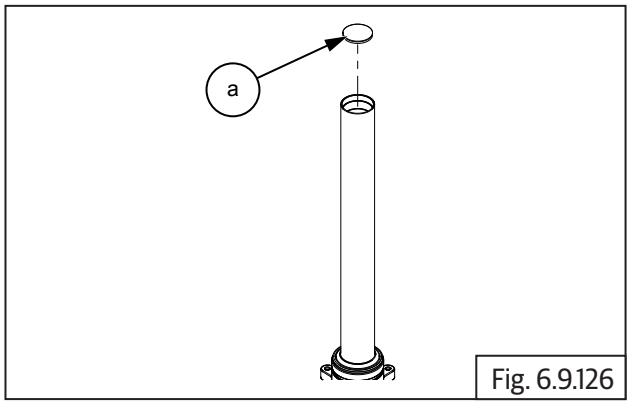

Fig. 6.9.126

- Gently pull out the spacer tube **(a)**.

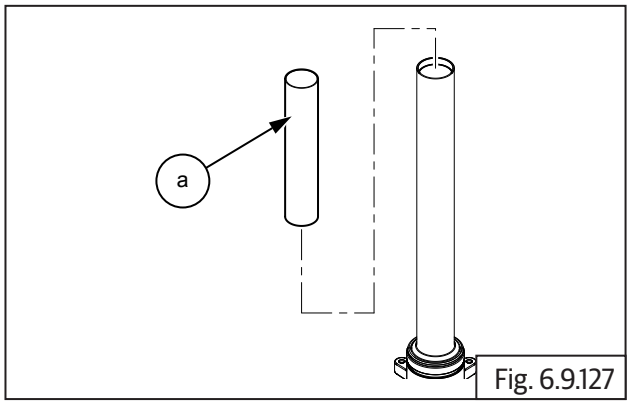

Fig. 6.9.127

- Gently invert fork assembly **(a)** into a clean tray to collect the fork oil coming out of main tube.

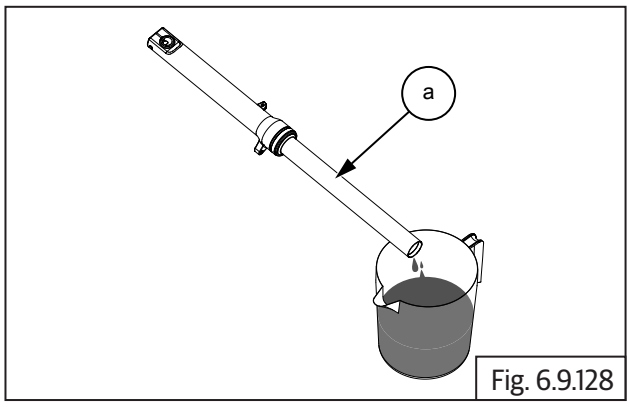

Fig. 6.9.128

⚠ CAUTION

Support the washer and main spring to prevent them from falling out when the oil has been drained.

- Remove washer **(a)**.

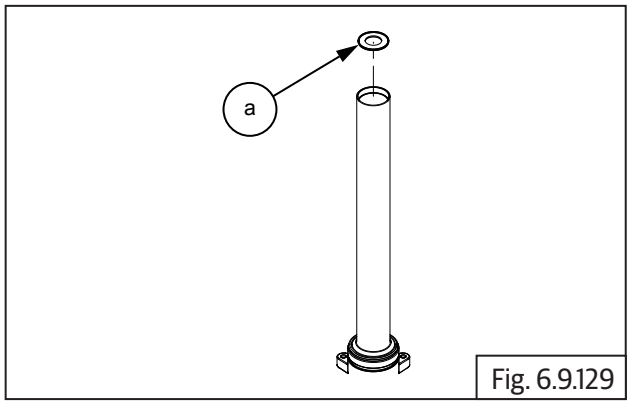

Fig. 6.9.129

- Remove main spring **(a)**.

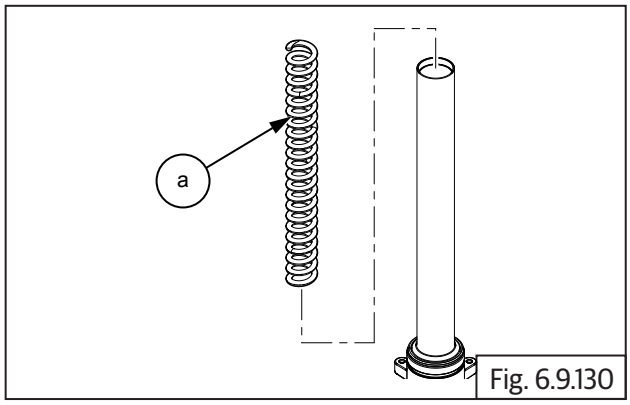

Fig. 6.9.130

- Hold fork **(a)** inverted and pump main tube into fork end several times till oil in the fork end drains out completely.

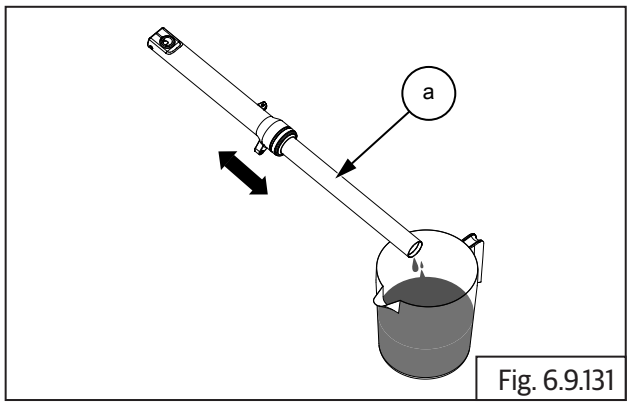

Fig. 6.9.131

- Insert special tool **(a)** into fork main tube **(b)** to lock and hold piston head inside.

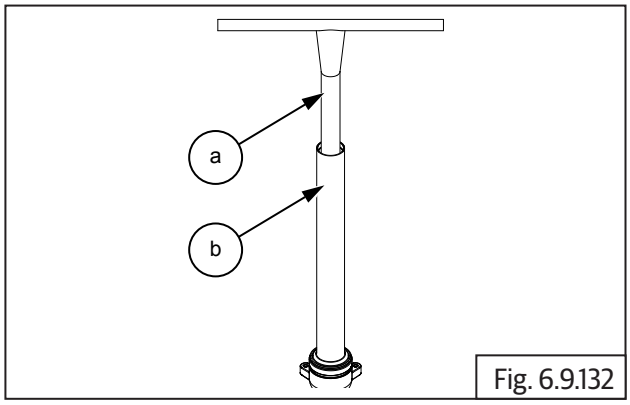

Fig. 6.9.132

SPL 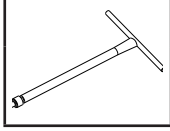	Part No: ST26461-2
	Part Name: Fork damper tube holder

- Remove Hex socket head screw **(M6) (a)** along with washer **(b)** from fork end.

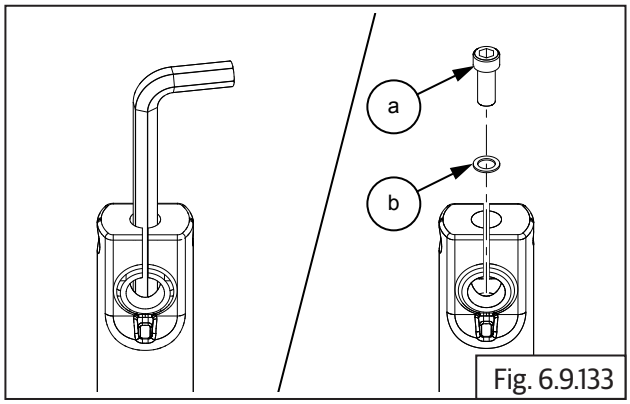

Fig. 6.9.133

	5 mm Allen key

- Remove the special tool from fork main tube.
- Gently lift dust cap out of fork end **(a)** and remove completely.

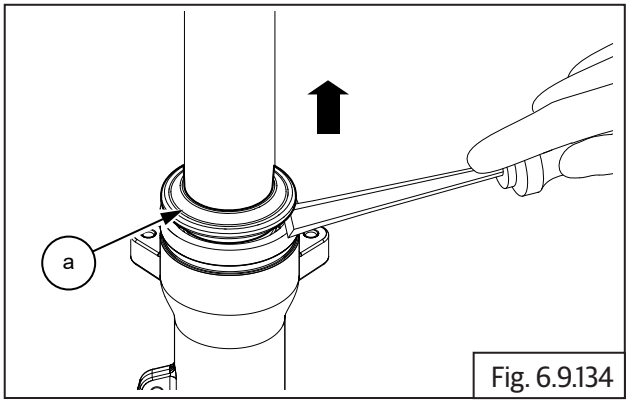

Fig. 6.9.134

	Chisel flat end

- Remove wire clip **(a)** from bottom tube.

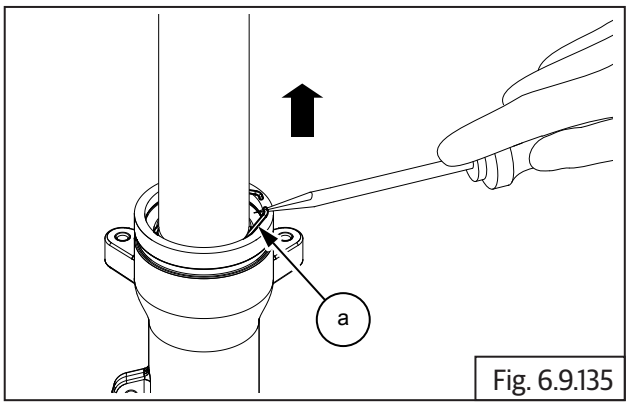

Fig. 6.9.135

	Chisel pointed

- Hold bottom tube firmly and pull out main tube sharply, to release oil seal and aluminum spacer from bottom tube.
- Pull out main tube **(a)** completely from bottom tube **(b)**.

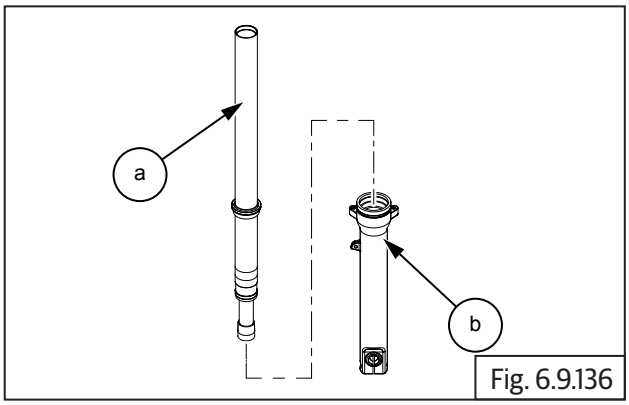

Fig. 6.9.136

- Remove the oil seal **(a)** from main tube **(b)** from top end.

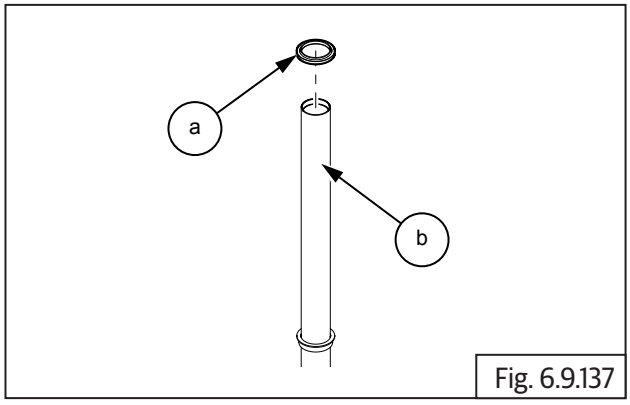

Fig. 6.9.137

- Remove spacer **(a)** from main tube **(b)** from top.

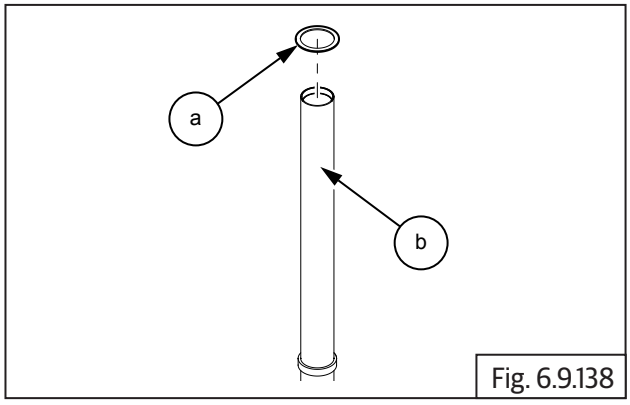

Fig. 6.9.138

- Remove aluminum split bush **(a)** from main tube **(b)** bottom.

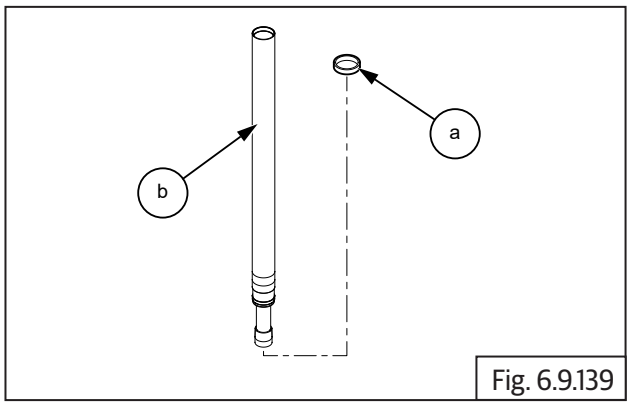

Fig. 6.9.139

- Remove tapper oil lock **(a)** from piston bottom **(b)** inside fork end.

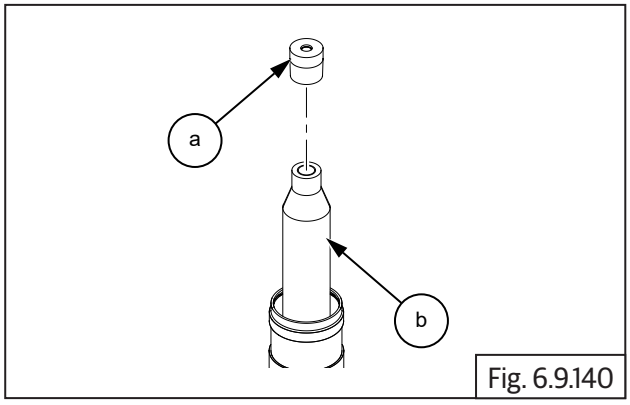

Fig. 6.9.140

- Tilt main tube up-side down and remove piston assembly **(a)** along with damper spring from main tube **(b)** inner.

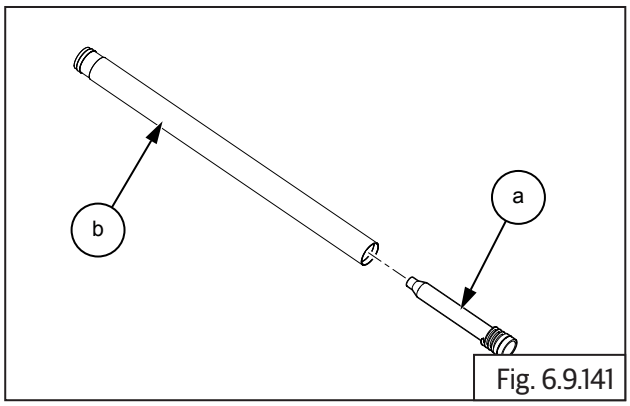

Fig. 6.9.141

- Remove damper spring **(a)** from piston **(b)**.

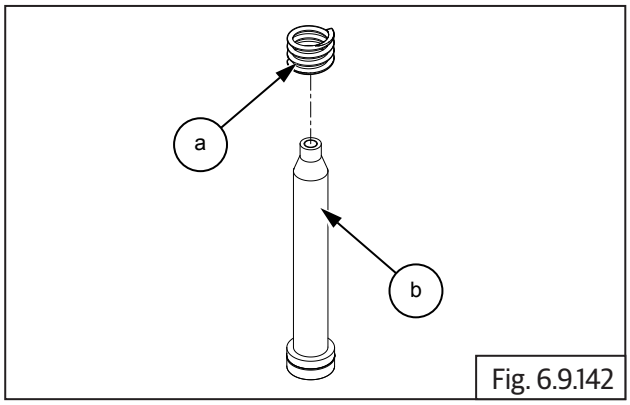

Fig. 6.9.142

6.9.3. Steering Stem Assembly from Frame Head Tube

⚠ CAUTION

Ensure the motorcycle is upright on a firm and flat surface.

- Locate a scissor jack **(a)** under the cradle frame **(b)** and lift motorcycle such that the front wheel is off the ground by minimum 6 inches (or 15 cm).

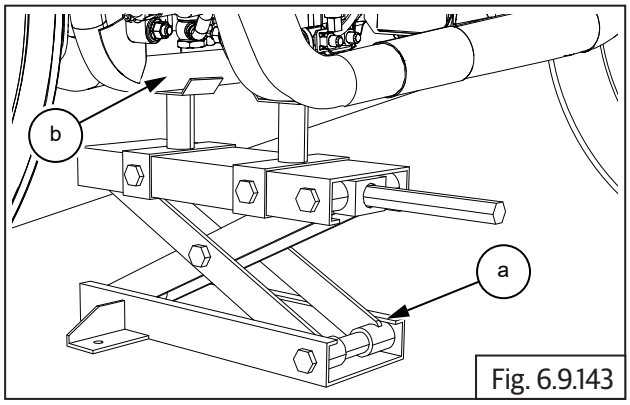

Fig. 6.9.143

- Ensure ignition and stop switch are in off position.
- Remove the following parts:
  - Front wheel (section 6.8.1).
  - Release brake hose and wheel speed sensor wires from the clips (section 9.3.2).
  - Wheel caliper from fork end LH (section 9.1.2). Support caliper suitably.
  - Wheel speed sensor from the fork end LH (section 9.3.2). Support wheel speed sensor suitably.
  - Front mudguard (section 6.6.2).
  - Front number plate (section 6.6.1).
  - Headlamp assembly and housing (section 11.1).
  - Trafficators (section 11.1.6).
  - Fork LH and RH (section 6.9.1).
  - Disconnect ignition switch connector (section 11.1.4).
  - Disconnect instrument cluster wiring connector (section 11.1.4).
  - Instrument cluster from top yoke (section 11.1.7).

For Interceptor

- Loosen and remove 4 Nos. Hex socket head screws **(M8) (a)** from clamp holding handlebar to top yoke.

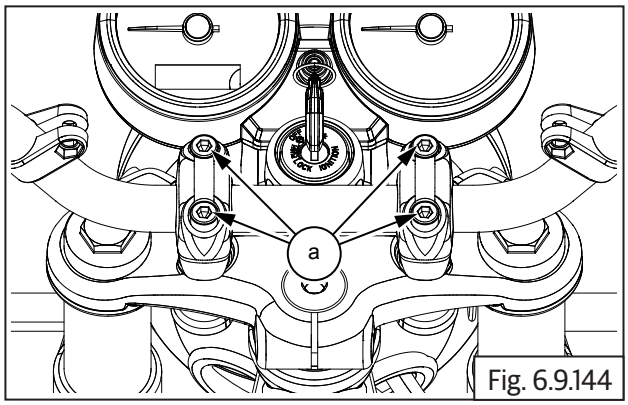

Fig. 6.9.144

	6 mm Allen socket with Ratchet

⚠ CAUTION

Support handlebar suitably to prevent damage to master cylinder and controls.

- Loosen and remove Hex socket head bolt **(M8) (a)** from the right side rear of top yoke **(b)**.

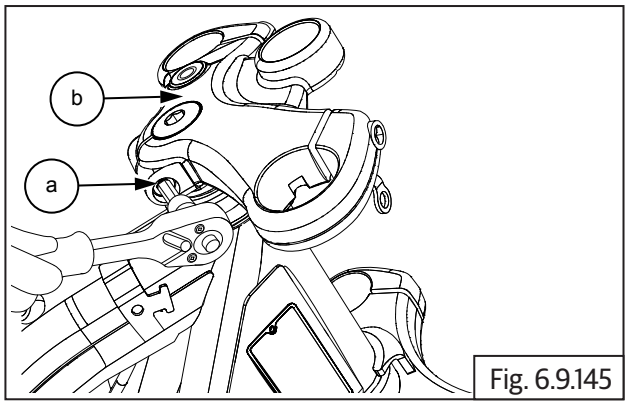

Fig. 6.9.145

	6 mm Allen socket with Ratchet

- Ensure free movement of top yoke in steering stem and gently pull out top yoke **(a)** from steering stem.

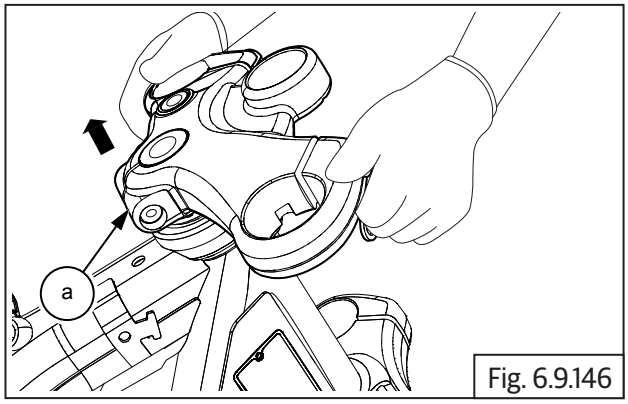

Fig. 6.9.146

- Turn steering stem to extreme left, loosen and remove stem nut **(M12) (a)**.

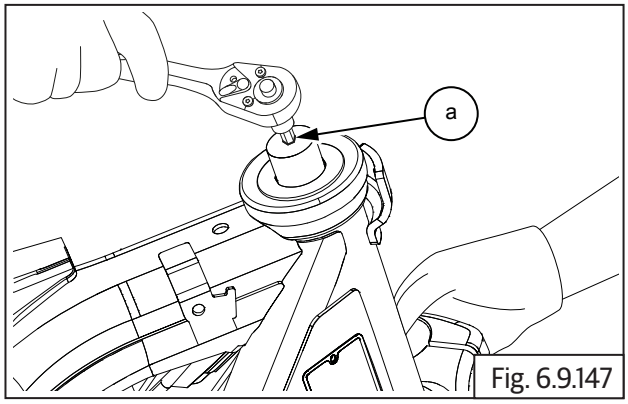

Fig. 6.9.147

	10 mm Allen socket with Ratchet

⚠ CAUTION

Support steering stem from bottom. DO NOT allow the steering stem to drop out of frame head tube.

- Hold steering stem from bottom and remove cover head stock **(a)**.

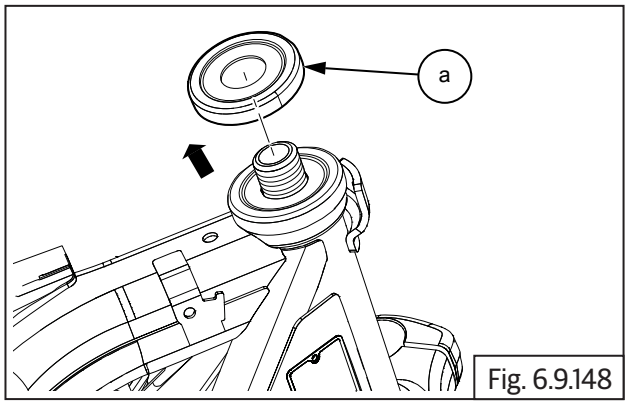

Fig. 6.9.148

- Hold steering stem from bottom and remove seal head stock **(a)**.

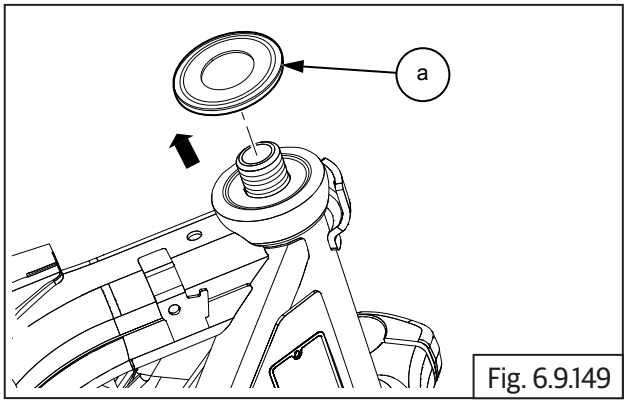

Fig. 6.9.149

- Gently pull out steering stem **(a)** from frame head tube bottom **(b)**.

⚠ CAUTION

DO NOT tap or use force to remove steering stem from frame head tube.

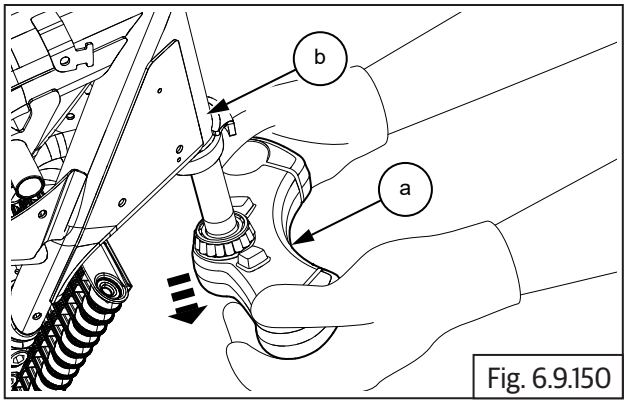

Fig. 6.9.150

6.9.4. Tapered Bearing Cups from Frame Head Tube

- Gently pull out tapered bearing **(a)** from frame head tube top **(b)**.

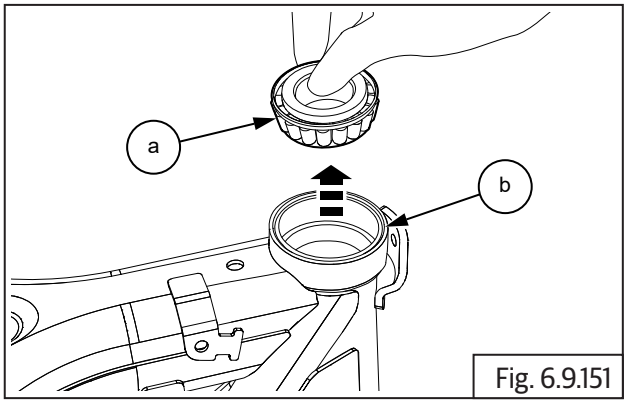

Fig. 6.9.151

- Install special tool **(a)** on frame head tube top **(b)**. Ensure tool is seated properly.

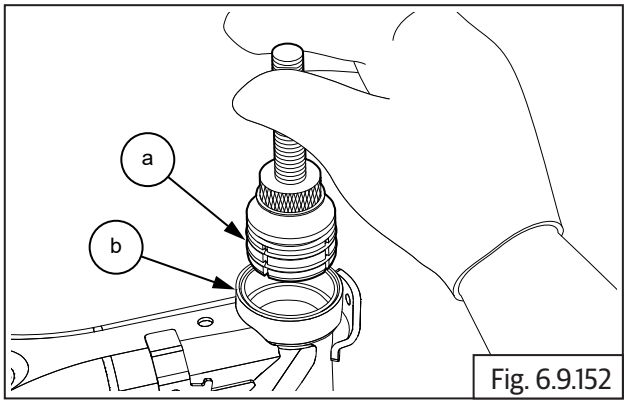

Fig. 6.9.152

SPL	Part No: ST30272/a
	Part Name: Headstock bearing puller assembly

- Rotate tool in clockwise direction and tighten lock nut **(a)**.

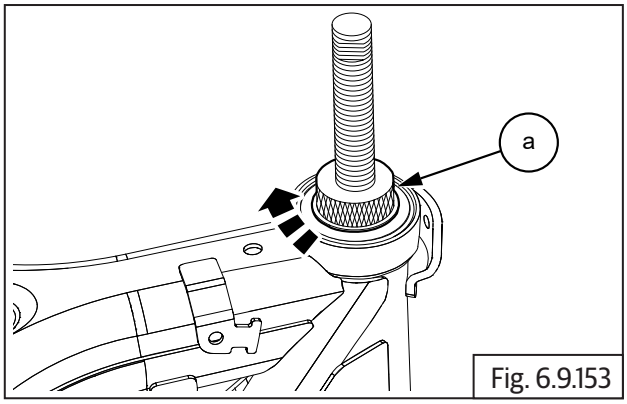

Fig. 6.9.153

SPL	Part No:ST30272/a
	Part Name: Headstock bearing puller assembly

- Hold lock nut **(a)** and tighten threaded strut **(b)** till resistance is felt and strut cannot be turned further.

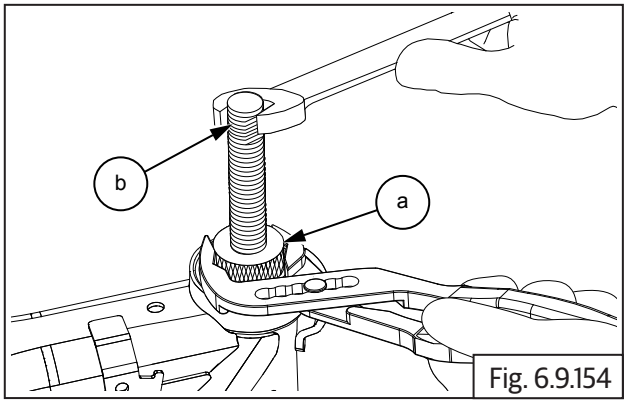

Fig. 6.9.154

	Adjustable pliers and 10 mm Double end spanner.

- Assemble puller cup **(a)**, washer **(b)** and hex nut **(M16) (c)** on strut as shown.

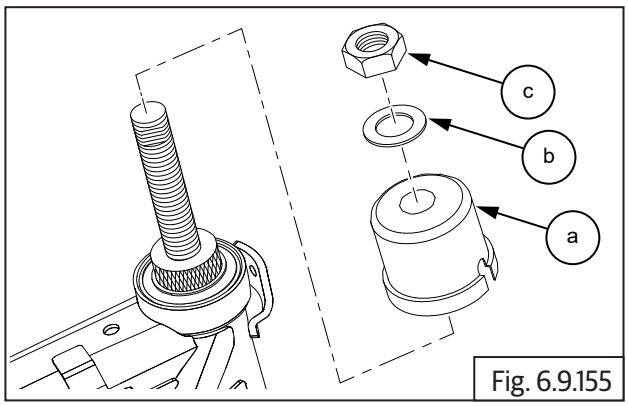

Fig. 6.9.155

SPL	Part No: ST30272/a
	Part Name: Headstock bearing puller assembly

- Tighten hex nut **(M16) (a)** in clockwise direction till bearing tool assembly comes out of frame head tube and hex nut rotates free.

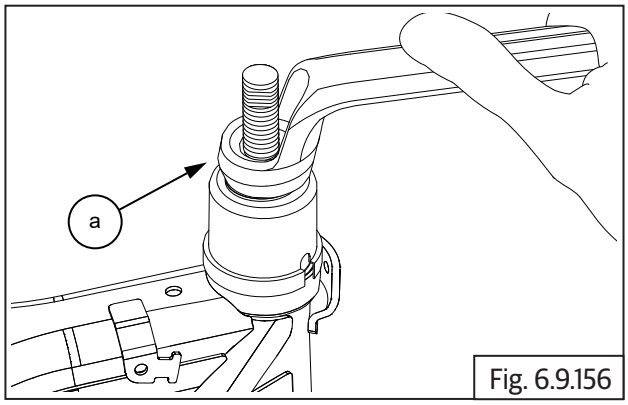

Fig. 6.9.156

	24 mm Ring spanner

- Remove hex nut **(a)**, washer **(b)** and cup **(c)** from strut as shown.

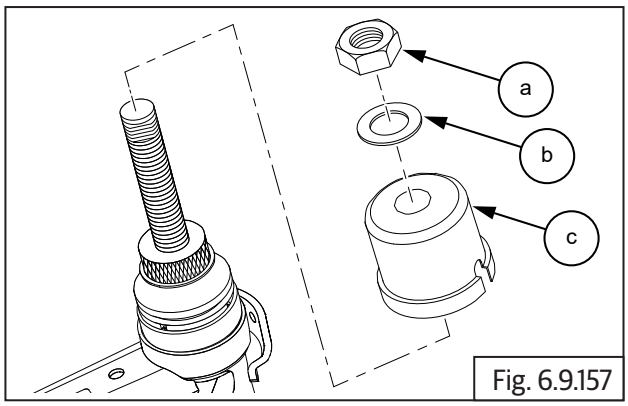

Fig. 6.9.157

- Remove tool **(a)** from frame head tube top **(b)**.

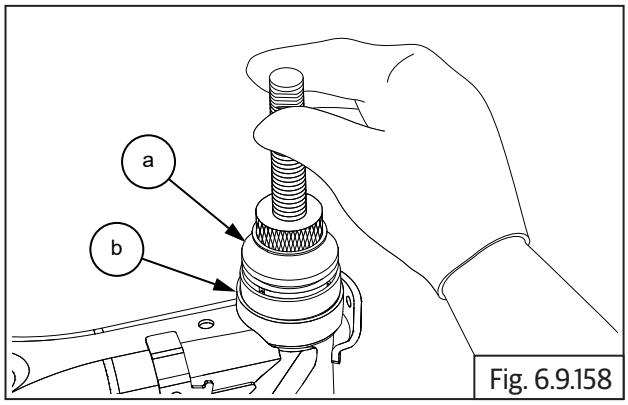

Fig. 6.9.158

- Remove bearing cup **(a)** from the frame head tube top **(b)**.

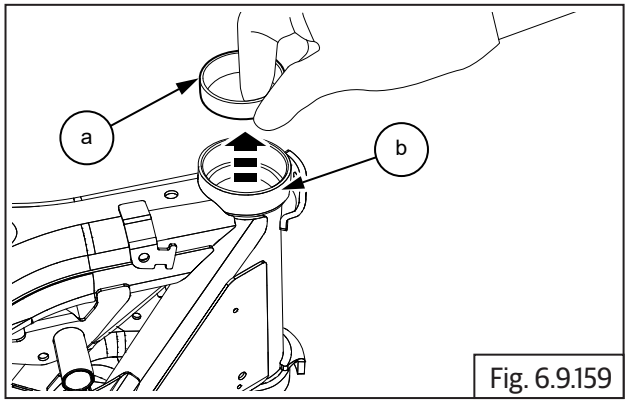

Fig. 6.9.159

- Repeat procedures mentioned above for removing bearing cup from frame head tube bottom.

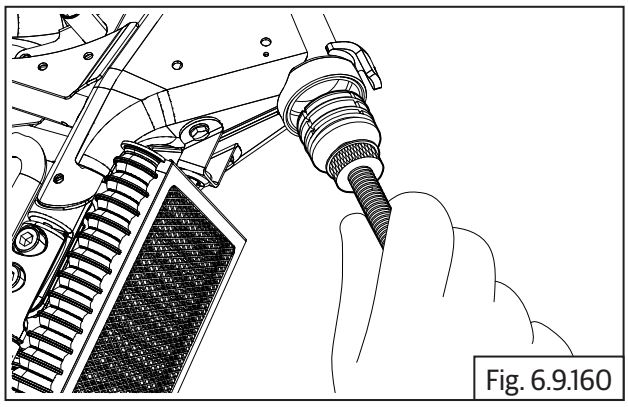
Fig. 6.9.160

SPL	
	Part No: ST30272/a
	Part Name: Headstock bearing puller assembly

Bottom Roller Bearing from Steering Stem

- Use bearing puller T-stem to remove the bearing from T-stem.

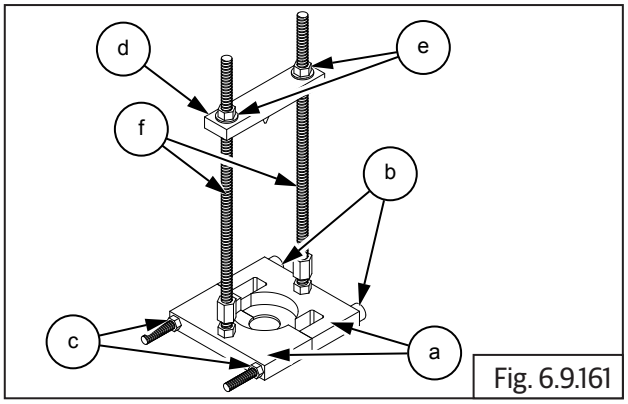

Fig. 6.9.161

Item No.	Description
a	Bottom Plates
b	Bolts
c	Nuts
d	Top Plate
e	Top Plate Nuts
f	Long Studs

SPL	
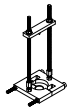	Part No: ST30298/a
	Part Name: Bearing puller, T-stem

- Assemble two halves of bottom plate **(a)** below bearing in steering stem.
- Ensure the mounting holes are aligned and insert long bolts **(b)** and nuts **(c)** into the bottom plates.

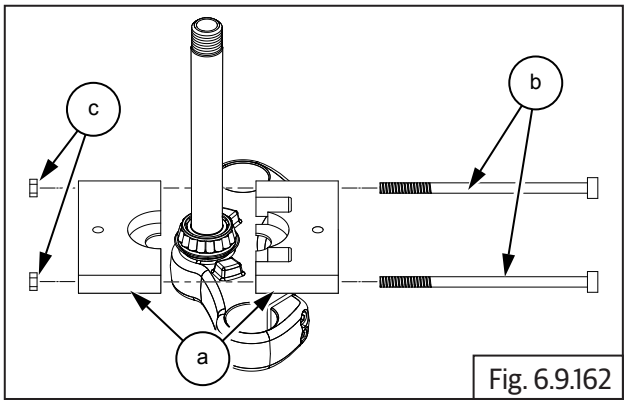

Fig. 6.9.162

- Hold 2 Nos. bolts **(a)** suitably and tighten nuts **(b)** just sufficiently.

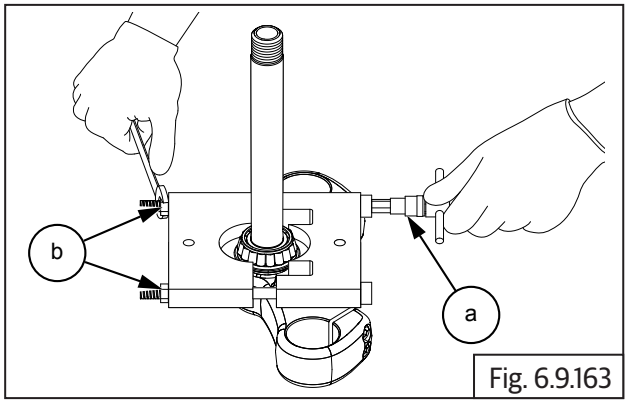

Fig. 6.9.163

	14 mm Double end spanner 8 mm Allen socket with Ratchet

- Ensure mounting holes are aligned and insert long bolts **(a)** into bottom plates and tighten lock nuts **(b)**.

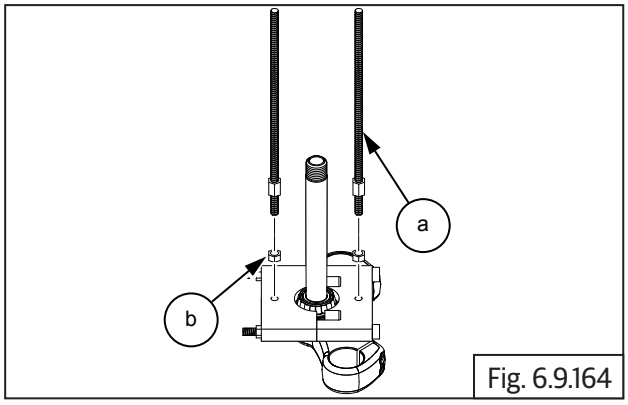

Fig. 6.9.164

	18 mm Double end spanner

- Locate top plate **(a)** above steering stem duly ensuring long studs from bottom plate **(b)** are correctly positioned into top plate.

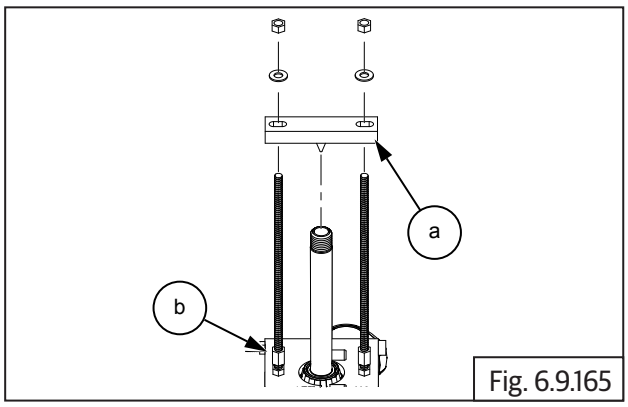

Fig. 6.9.165

- Tighten 2 Nos. nuts **(a)** on top plate evenly to pull out the tapered roller bearing **(b)** from steering stem.

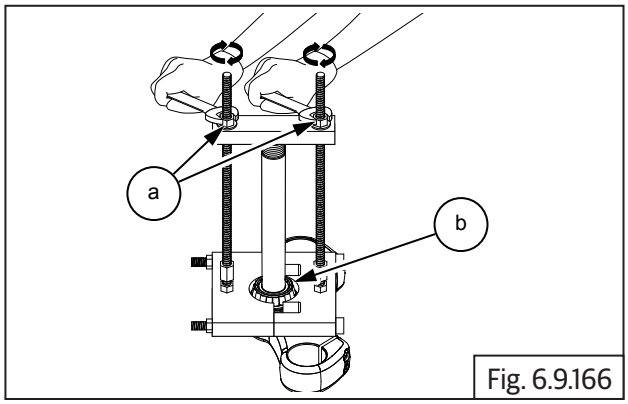

Fig. 6.9.166

	18 mm Double end spanner

Dismantle Bearing Puller T-Stem As Follows:

- Loosen 2 Nos. nuts **(a)** on top plate evenly to pull out the tapered roller bearing from the steering stem.

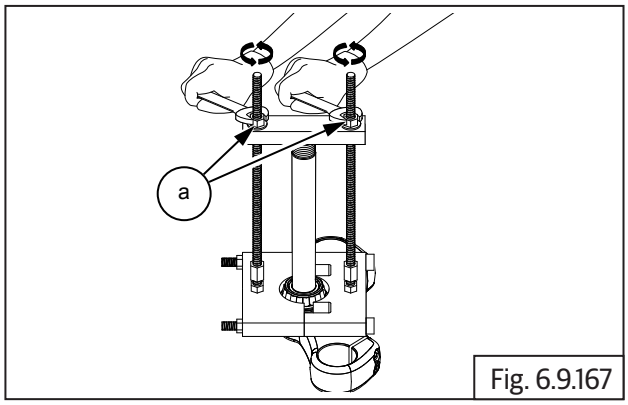

Fig. 6.9.167

	18 mm Double end spanner

- Remove top plate **(a)** above steering stem duly ensuring the long studs from bottom plate **(b)**.

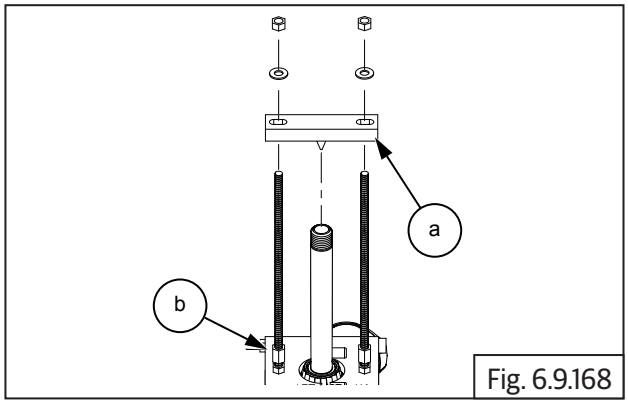

Fig. 6.9.168

- Loosen lock nuts **(a)** remove long studs **(b)** from bottom plates.

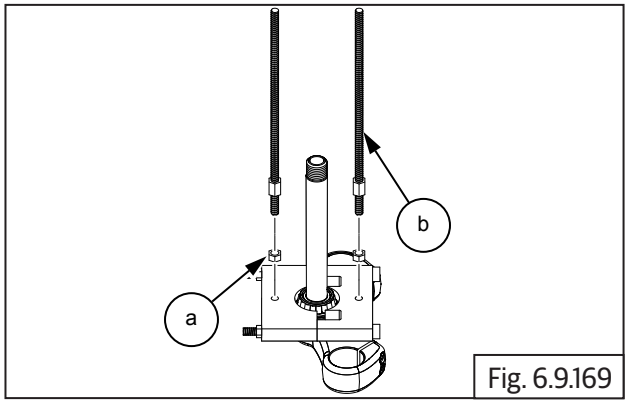

Fig. 6.9.169

	18 mm Double end spanner

- Hold 2 Nos. bolts **(a)** suitably and loosen nuts **(b)** just sufficiently.

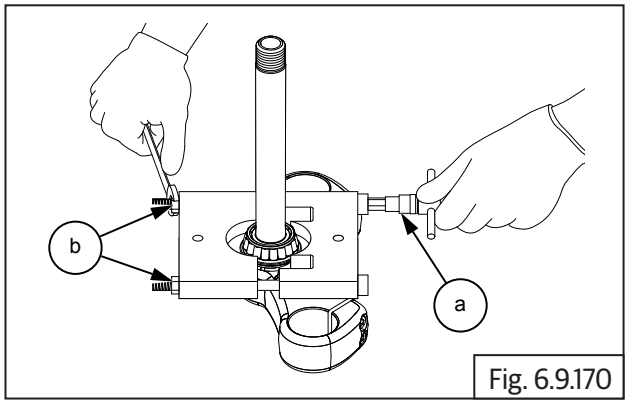

Fig. 6.9.170

	14 mm Double end spanner 8 mm Allen socket with Ratchet

- Remove two bolts **(a)**, nuts **(b)** and halves **(c)**.

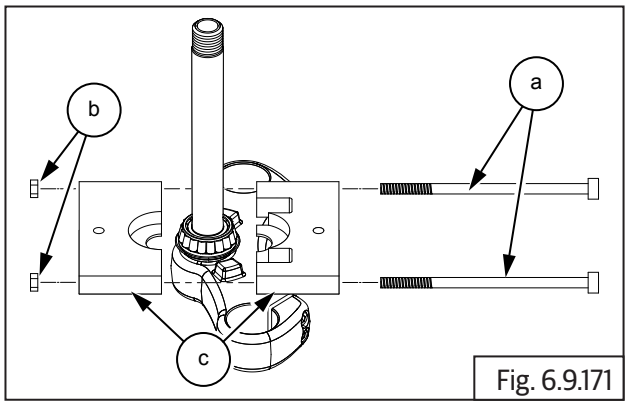

Fig. 6.9.171

- Remove bottom roller bearing **(a)** from steering stem dust seal **(b)**.

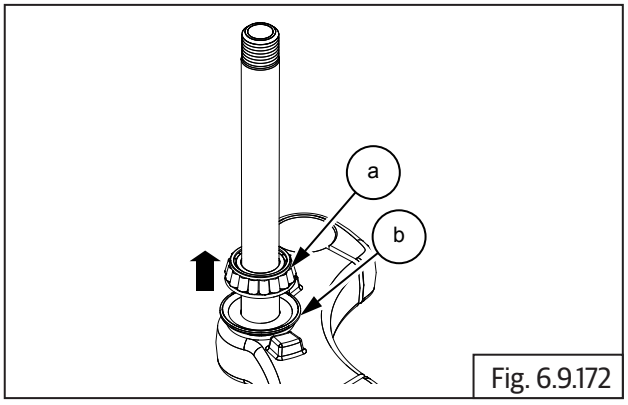

Fig. 6.9.172

6.9.5. Shock absorber

⚠ CAUTION

Ensure the motorcycle is upright on a firm and flat surface.

- Locate a scissor jack **(a)** under the cradle frame **(b)** and support motorcycle such that the rear wheel is on the ground.

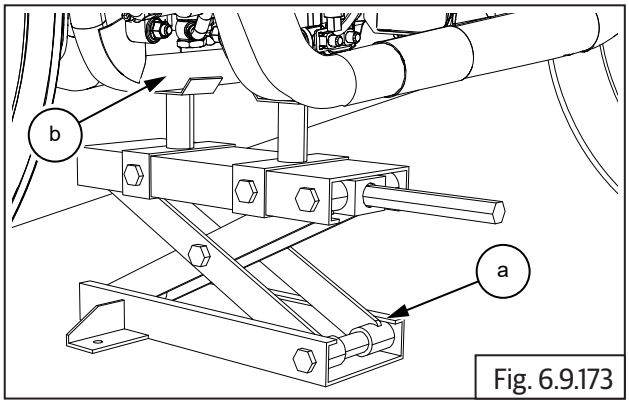

Fig. 6.9.173

- Loosen and remove button head bolt **(M8) (a)** from shock absorber **(b)** top and frame **(c)** RH.

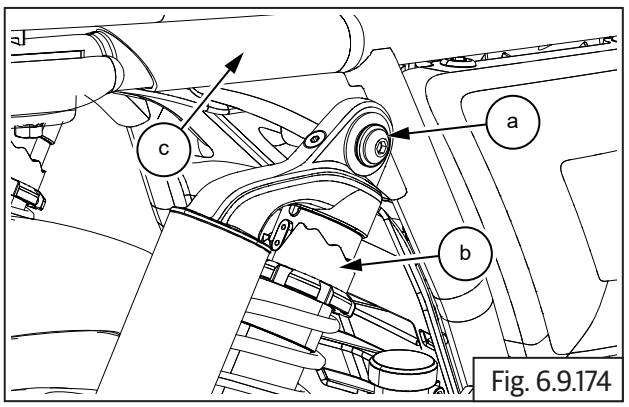

Fig. 6.9.174

	6 mm Allen key

- Support rear wheel, loosen and remove button head screw **(M8) (a)** from the shock absorber bottom **(b)** and swingarm RH **(c)**.

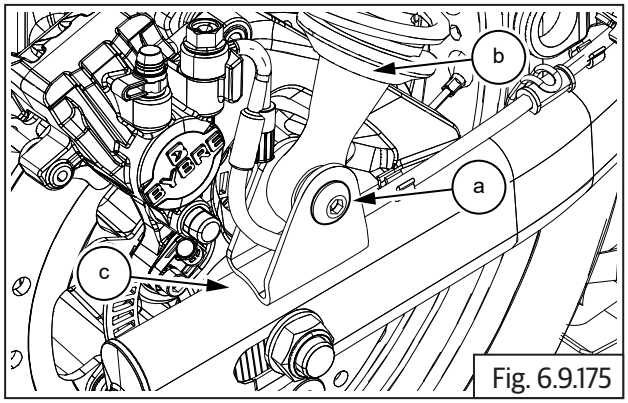

Fig. 6.9.175

	6 mm Allen socket with ratchet

- Gently remove RH shock absorber from swingarm bracket.
- Loosen grab handle mounting on frame (section 6.6.8).
- Loosen and remove button head bolt **(M8) (a)** from shock absorber **(b)** top and frame **(c)** LH. Remove grab handle **(d)**.

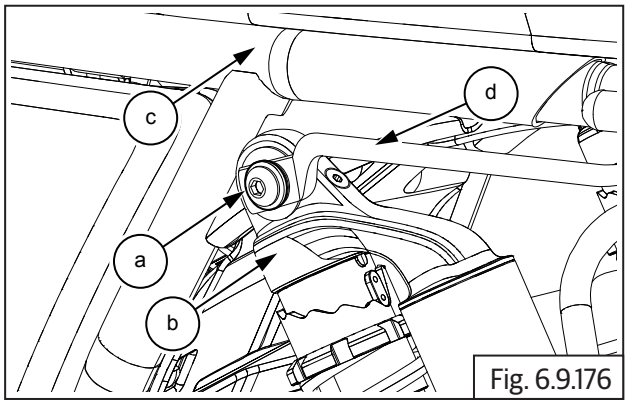

Fig. 6.9.176

	6 mm Allen socket with ratchet

- Loosen and remove button head bolt **(M8) (a)** from shock absorber **(b)** bottom and swingarm **(c)** LH.

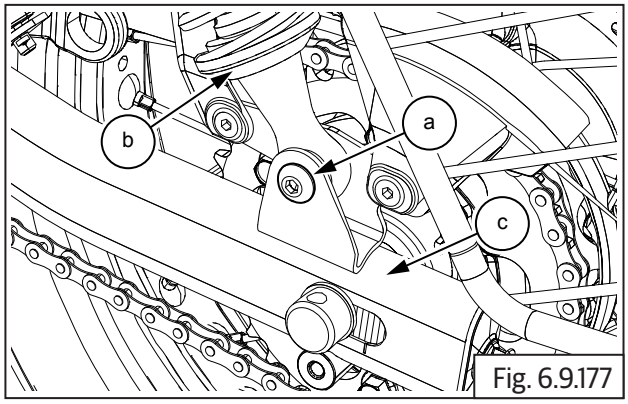

Fig. 6.9.177

	6 mm Allen socket with ratchet

- Gently remove LH shock absorber from swingarm bracket.

⚠ CAUTION

Ensure motorcycle is supported suitably at the rear end after removing both shock absorbers to prevent motorcycle from tipping over and falling down.

6.9.6. Swingarm

- Remove the following parts:
  - Rear wheel (section 6.8.3).
  - Rear shock absorber LH and RH (section 6.9.5).

⚠ CAUTION

Ensure the motorcycle is upright on a firm and flat surface. Support the motorcycle firmly while removing the swingarm.

- Hold spindle bolt **(M16)** in frame LH side and loosen and remove hex nut **(M16) (a)** with washer **(b)** from RH side.

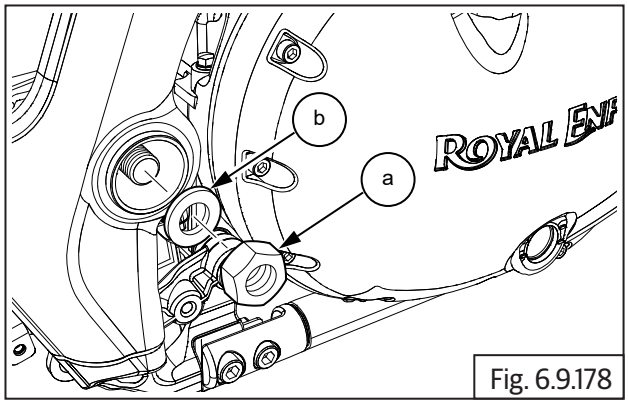

Fig. 6.9.178

	24 mm Socket with T-handle 24 mm Socket with Ratchet

- Insert special tool **(a)** into frame RH side and loosen the adjuster swingarm in clock wise direction (Left hand thread).

⚠ CAUTION

Adjuster is a left hand thread. Wrong rotation may damage the threads and hub.

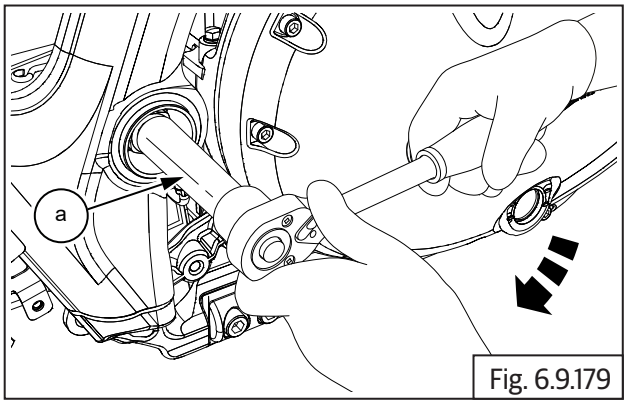

Fig. 6.9.179

SPL 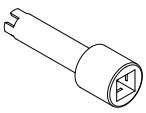	Part No: ST30269/a
	Part Name: Frame Adjuster OD 21.5/ ID18 mm - Swingarm

- Provide suitable support below swingarm **(a)** and pull out spindle **(b)** from LH side.

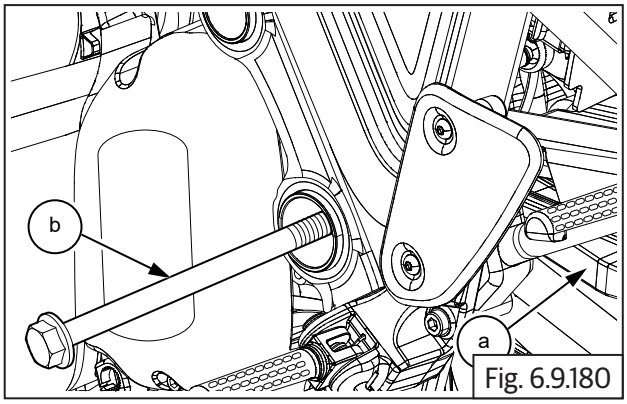

Fig. 6.9.180

- Loosen and remove 2 Nos. Hex socket button bolts **(M6) (a)** to separate chain guard **(b)** from swingarm RH.

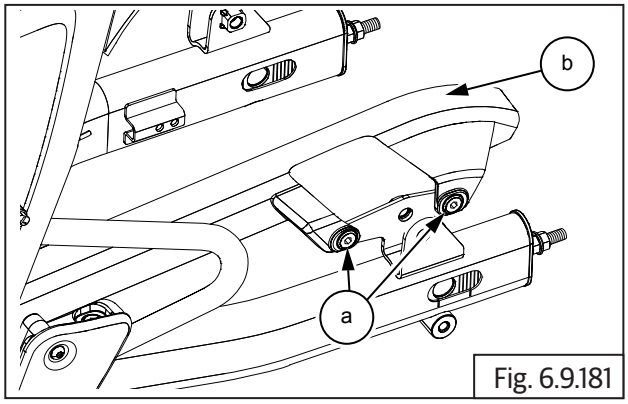

Fig. 6.9.181

	5 mm Allen key

- Loosen and remove Hex socket button head bolt **(M6) (a)** to separate chain guard **(b)** from swingarm.

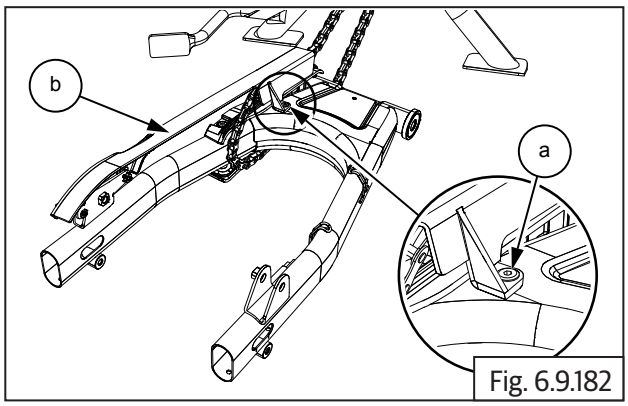

Fig. 6.9.182

	5 mm Allen key

- Rotate swingarm slightly and release drive chain **(a)** from swingarm **(b)**.

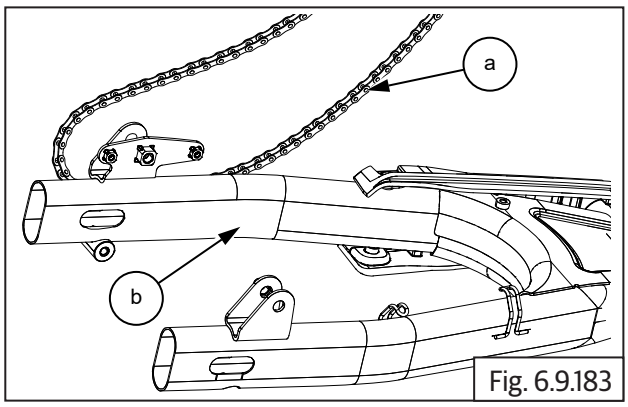

Fig. 6.9.183

- Remove end cup **(a)** from swingarm LH and RH.

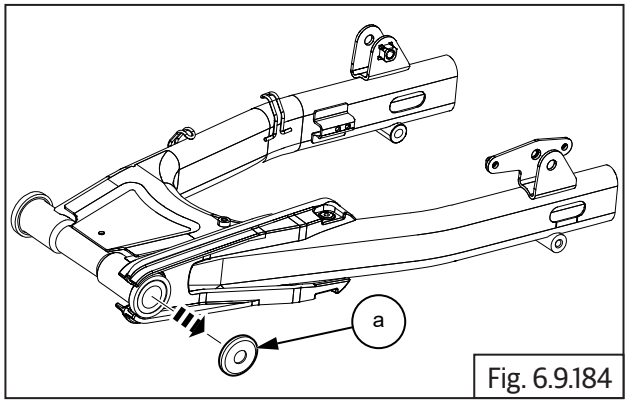

Fig. 6.9.184

- Remove bearing sleeve **(a)** from swingarm LH.

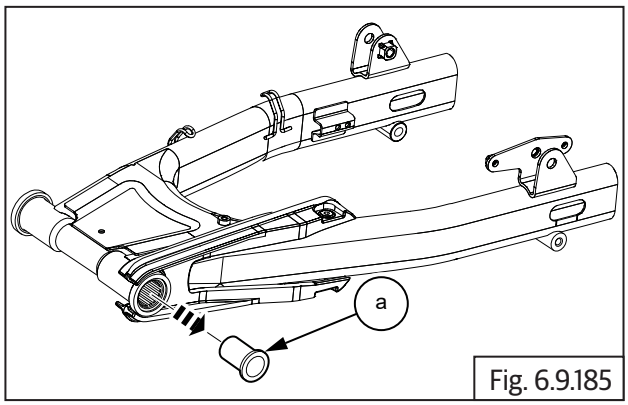

Fig. 6.9.185

- Remove bearing sleeve **(a)** from swingarm RH.

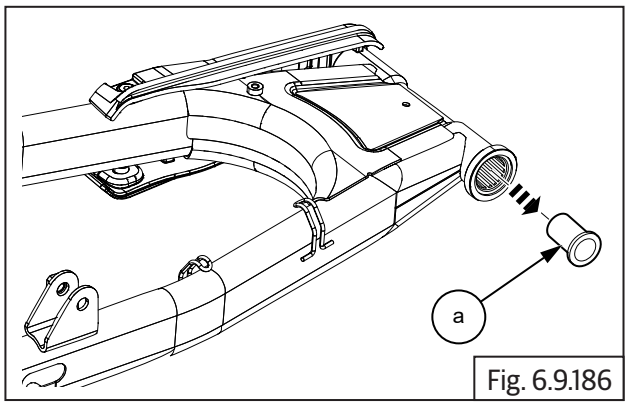

Fig. 6.9.186

- Loosen and remove 2 Nos. Hex socket button head bolts **(M6) (a)** to remove chain rubber strip **(b)**.

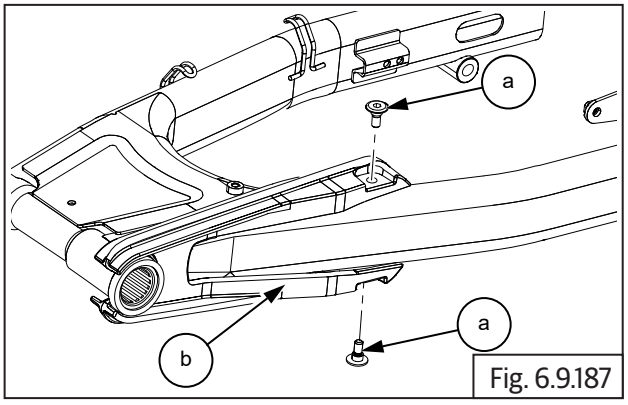

Fig. 6.9.187

	5 mm Allen key

NOTE
• *Needle roller bearing inside swingarm cannot be removed/replaced. In the event of bearing failure swingarm assembly should be replaced.*

Inspection

6.9.7. Front Fork Leg

- Inspect main tube for any scratches in the working area. Replace if scratched.

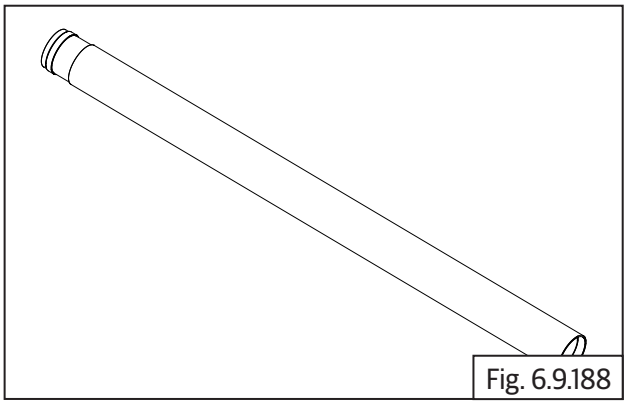
Fig. 6.9.188

- Fork pipe runout, service limit 0.2 mm.
- Inspect main tubes for any bends using dial gauge.
- Inspect fork ends inner side for any damages and scratches. Replace if found damaged.
- Inspect fork ends for any cracks- especially at oil seated area. Replace if cracked.
- Inspect piston for any damages/scratches. Replace if damaged.
- Inspect main spring for any coil breakage/ reduction in free length and replace. Service limit 303 $\pm$3.0 mm.
- Inspect damper spring for any coil breakage/ reduction in free length and replace.
- Main spring free length 303 $\pm$3.0 mm.

6.9.8. Front Fork Air Gap Setting

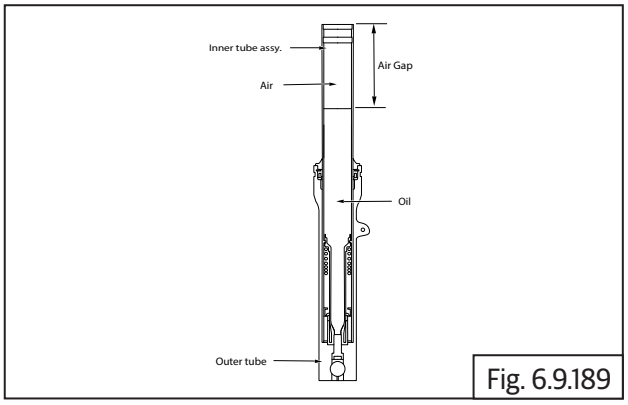

Fig. 6.9.189

- Remove fork leg (LH & RH) assembly from the vehicle.
- Disassemble all parts of the fork external and internal parts with cleaning agent and leave to dry.
- Reassemble fork leg assembly with out main spring, washer spring top, spacer tube, washer-2 and top bolt cap Assy.
- Set the fork leg assembly in a vice or flat surface and ensure it is vertical.
- Fully compress the inner tube assembly in the outer tube untill it bottoms out.
- using a cylinder jar measure 474 cc of Gabriel Fork Oil.
- Fill the oil through inner tube top side.
- Hold the outer tube fully extend and fully compress (Stork) the inner tube assy 20-times.
- Fully compress the inner tube assembly and leave for 30- minutes to allow the air to bleed out.
- Measure the height of the oil (Air Gap) using a fork Vernier calliper.

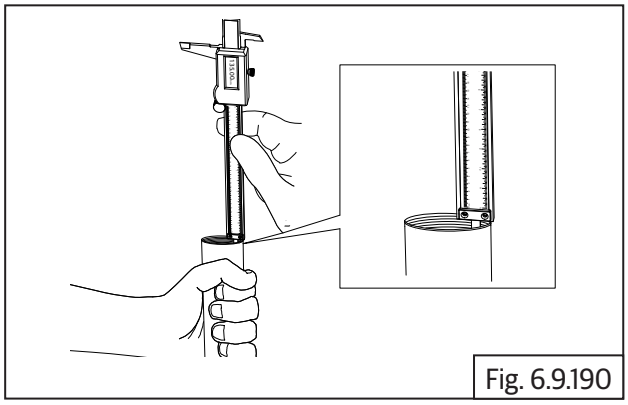

Fig. 6.9.190

- Make verrnier "zero", unlock the screw and move the verrnier scale towards oil trace side.

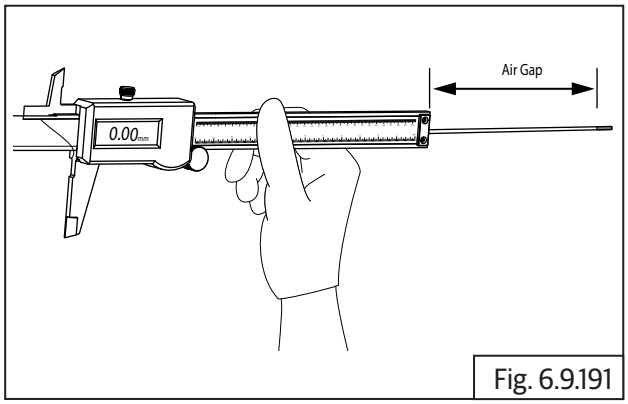

Fig. 6.9.191

- When main scale touch the oil trace, the value is air gap in front fork.

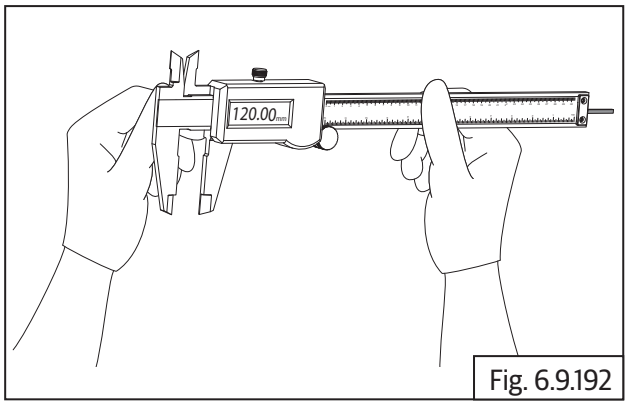

Fig. 6.9.192

6.9.9. Steering Stem

- Inspect and replace roller bearing **(a)** if it has rusting, uneven wear of rollers and/or rollers are falling out of cage.

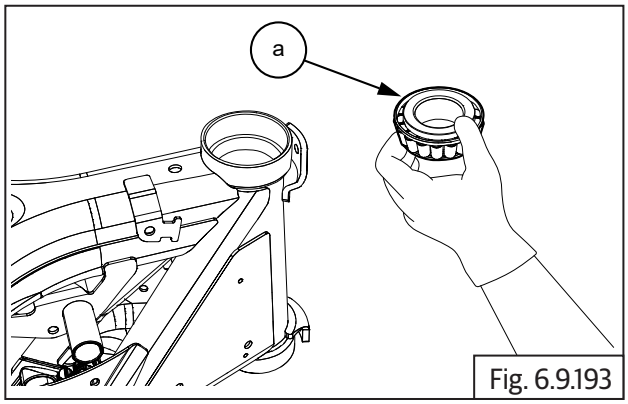

Fig. 6.9.193

- Inspect bearing cups for rust, pitting and uneven wear. Replace if damaged.
- Inspect steering stem for any bends or damages. Replace if damaged.

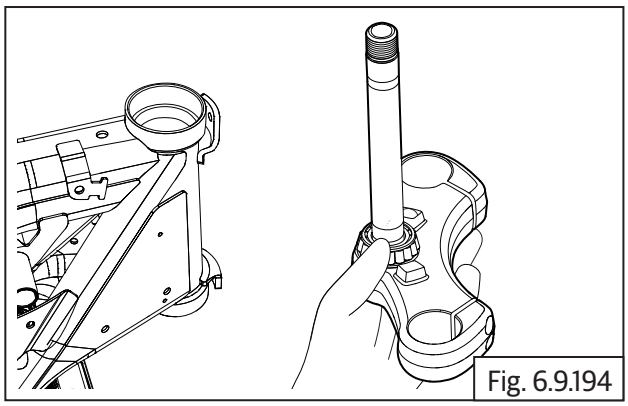

Fig. 6.9.194

6.9.10. Shock absorber

- Inspect shock absorber for damaged canister, spring coil breakage, oil leaks, weak or hard action of shock absorber. Replace if found.
- Inspect mounting hole rubber inserts for any tear or damage. Replace shock absorber.
- Inspect and replace shock absorber rod if it has any bends, cracks or rusting.

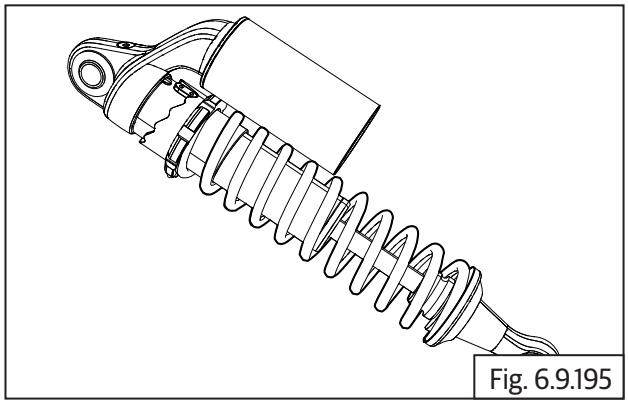

Fig. 6.9.195

6.9.11. Swingarm

- Inspect LH and RH swingarm for any damages or bends.
- Inspect swingarm in fully assembled condition in motorcycle for side play, sticky movement in working area and replace bearing sleeve and bearing if any of these conditions are present.
- Inspect if swingarm end cup is worn-out or damaged.
- Inspect spindle for any wear-out.

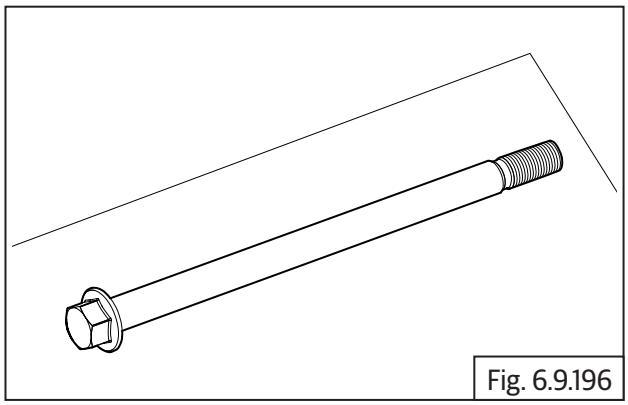

Fig. 6.9.196

6.9.12. Top Yoke

- Inspect top yoke for any cracks or damages in seating area. Replace if damaged.

Replace

- Replace oil seals, dust seals, washers, chain guides whenever removed from the front fork/swingarm.
- Always fill up front fork with recommended oil from a new container. **DO NOT reuse the oil**.

Assembly

6.9.13. Swingarm

⚠ CAUTION

Ensure the motorcycle is upright on a firm and flat surface.

- Locate rubber chain strap **(a)** on the LH side, align mounting holes and tighten with 2 Nos. Hex socket button head bolts **(M6) (b)**.

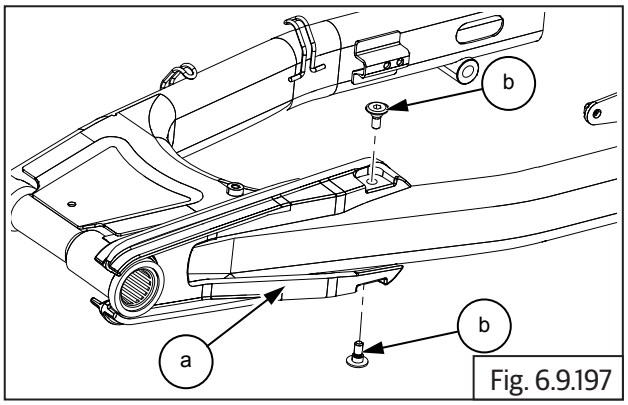

Fig. 6.9.197

	5 mm Allen key

- Locate bearing sleeve **(a)** into swingarm LH and RH.

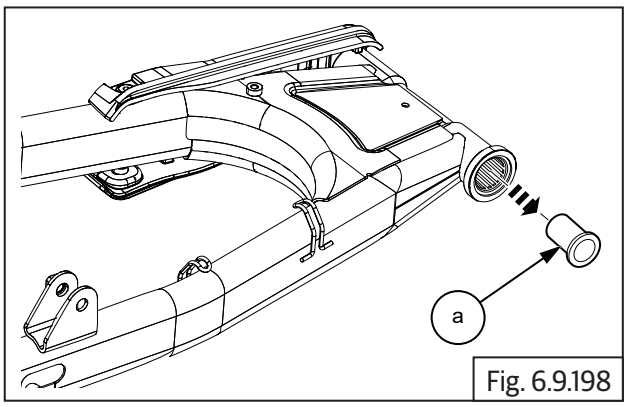

Fig. 6.9.198

- Assemble end cup **(a)** into swingarm LH and RH.

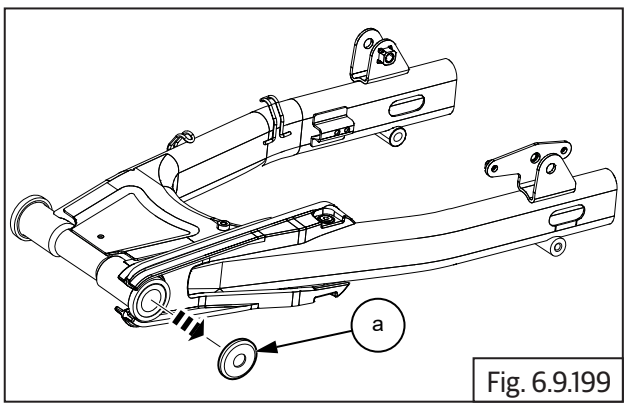

Fig. 6.9.199

- Insert drive chain **(a)** into swingarm **(b)** LH.

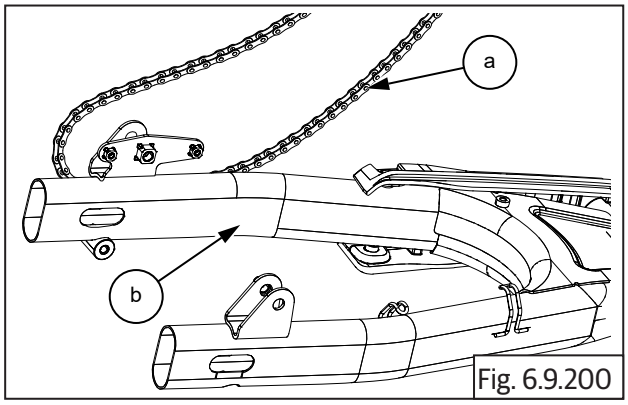

Fig. 6.9.200

- Locate and align chain guard front mounting hole on swingarm RH **(b)** and tighten with Hex socket button head bolt **(M6) (a)**.

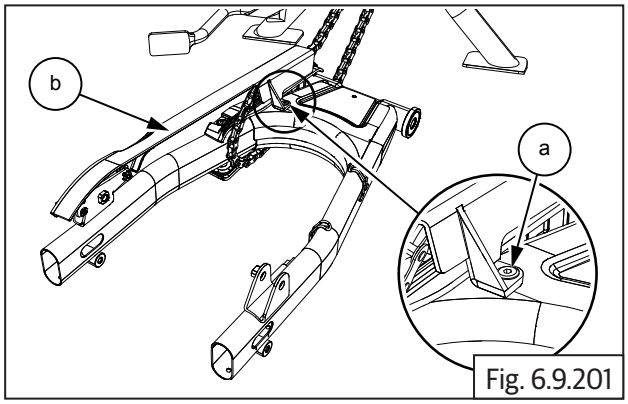

Fig. 6.9.201

	5 mm Allen key
Torque	3 N-m/0.3 kgf-m

- Ensure rear chain guard **(a)** mounting holes are aligned on the swingarm RH and tighten with 2 Nos. Hex socket button bolts **(M6) (b)**.

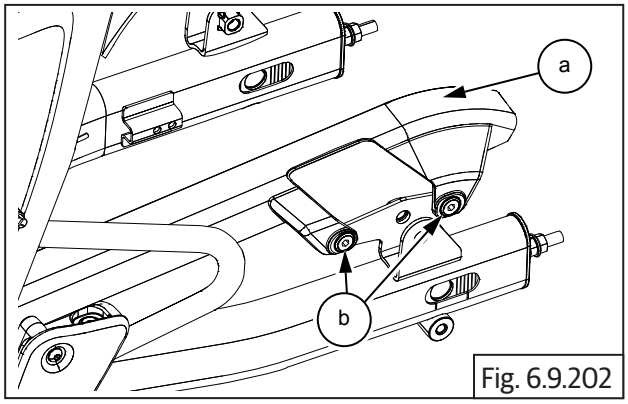

Fig. 6.9.202

	5 mm Allen key
Torque	3 N-m/0.3 kgf-m

- Assemble end cap **(a)** with slots facing outside on swingarm RH **(b)**.

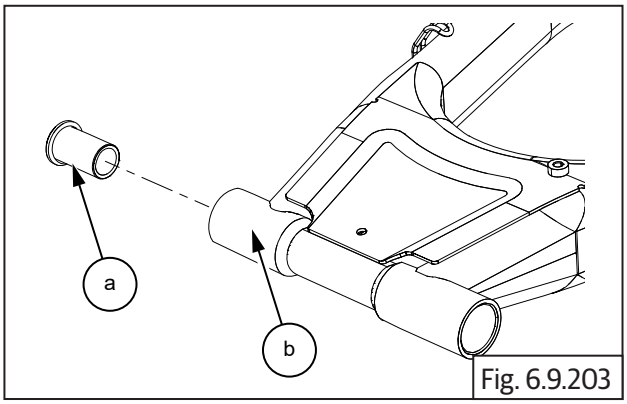

Fig. 6.9.203

- Position swingarm assembly **(a)** into frame and ensure mounting holes are aligned properly.

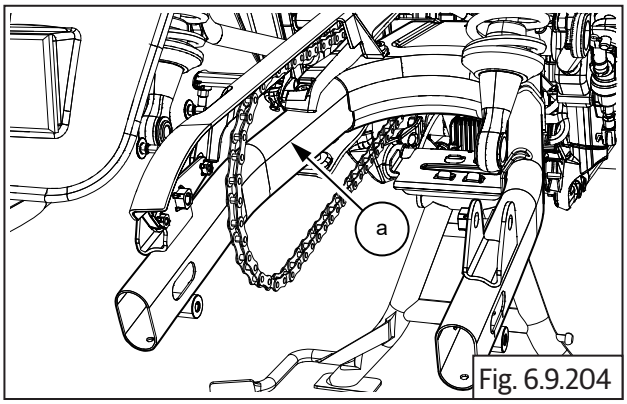

Fig. 6.9.204

- Insert spindle **(a)** from LH till it is located on the end cap with slots. Do not insert fully

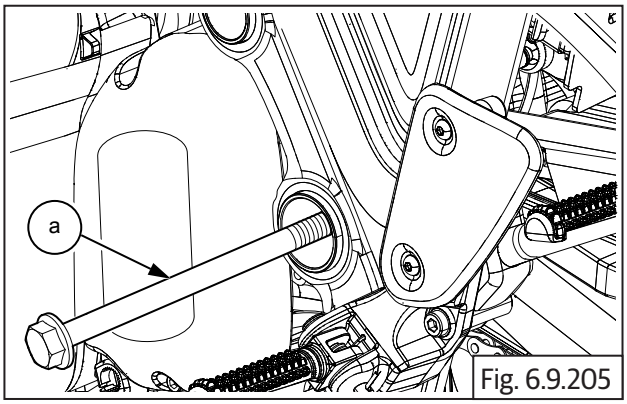

Fig. 6.9.205

- Insert special tool **(a)** into slot in frame in RH side, ensuring adjuster swingarm is located correctly and tighten into frame (anticlockwise direction).

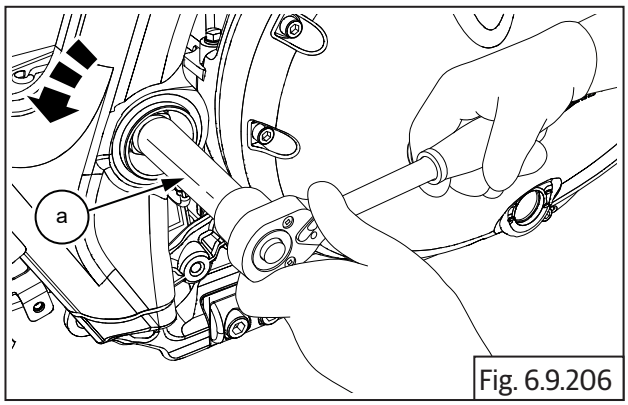

Fig. 6.9.206

SPL 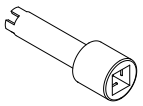	Part No: ST30269/a
	Part Name: Frame Adj. OD 21.5/ID18 mm - Swingarm
Torque	3 N-m/0.3 kgf-m

⚠ CAUTION

Adjuster has left hand threads. Turn anticlockwise to tighten.

- Remove special tool and insert spindle into swingarm completely.
- Locate Hex nut **(M16) (a)** along with washer **(b)** on spindle.
- Hold spindle from LH side suitably and tighten nut just sufficiently. **DO NOT TIGHTEN NUT FULLY**.

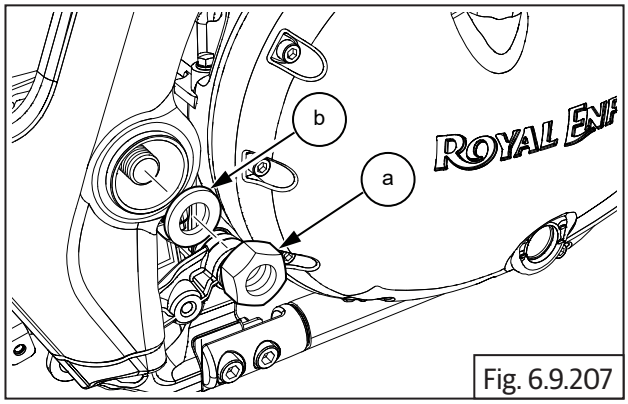

Fig. 6.9.207

	24 mm Socket with Ratchet
Torque	100 N-m/10 kgf-m

6.9.14. Shock Absorber

⚠ CAUTION

Ensure the motorcycle is upright on a firm and flat surface.

- Locate and align the shock absorber top **(a)** to mounting hole on frame LH **(b)** and tighten with button head bolt **(M8) (c)**.
- Locate grab handle into frame **(d)** (section 6.6.9).

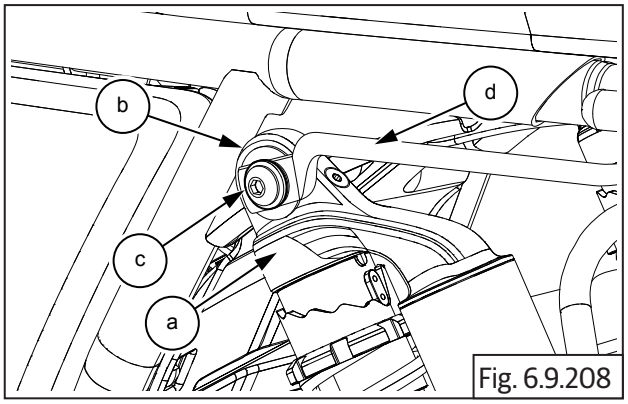

Fig. 6.9.208

	6 mm Allen socket and Ratchet
Torque	18 N·m/1.8 kgf-m

- Align bottom mounting hole of shock absorber **(a)** to swingarm bracket LH **(b)** and tighten with button head bolt **(M8) (c)**.

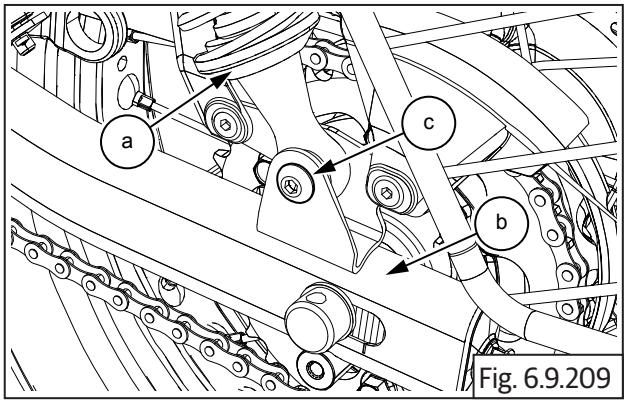

Fig. 6.9.209

	6 mm Allen socket and Ratchet
Torque	18 N·m/1.8 kgf-m

- Tighten both mounting bolts evenly to torque.
- Locate and align the shock absorber top **(a)** to the mounting hole on frame RH **(b)** and tighten with button head bolt **(M8) (c)**.

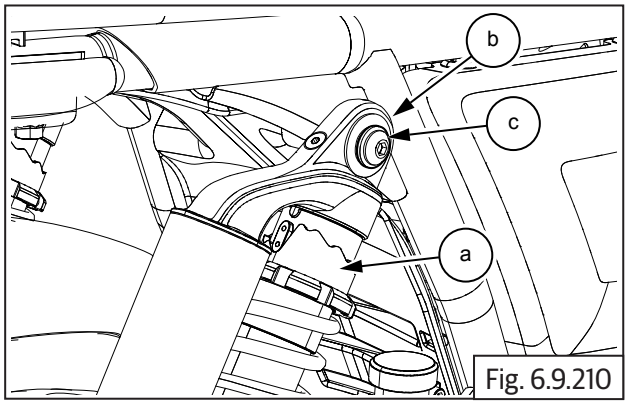

Fig. 6.9.210

	6 mm Allen socket and Ratchet
Torque	18 N·m/1.8 kgf-m

- Align the shock absorber **(a)** bottom mounting hole to the swingarm bracket RH **(b)** and tighten with button head bolt **(M8) (c)**.

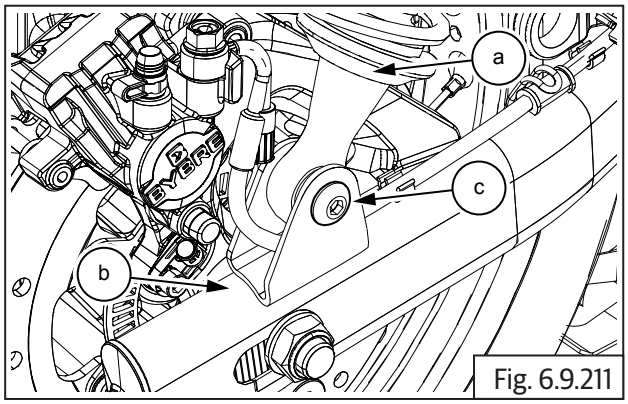

Fig. 6.9.211

	6 mm Allen socket and Ratchet
Torque	18 N·m/1.8 kgf-m

6.9.15. Steering Stem Assembly into Frame Head Tube

- Insert the dust seal **(a)** and roller bearing **(b)**.

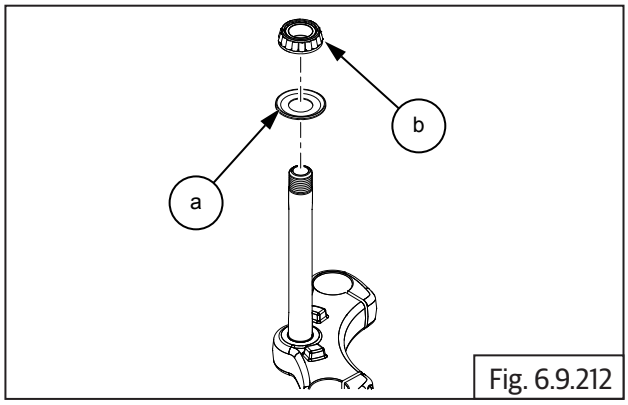

Fig. 6.9.212

- Assemble bearing **(a)** with special tool **(b)**.

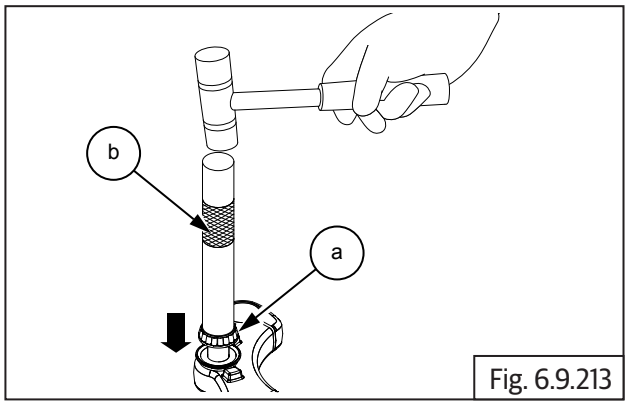

Fig. 6.9.213

SPL	Part No: ST30299/a
	Part Name: T-Stem taper roller bearing installer

6.9.15. Tapered Roller Bearing Cups on Frame Head Tube

- Locate bottom bearing cup **(a)** into frame head tube bottom **(b)**.

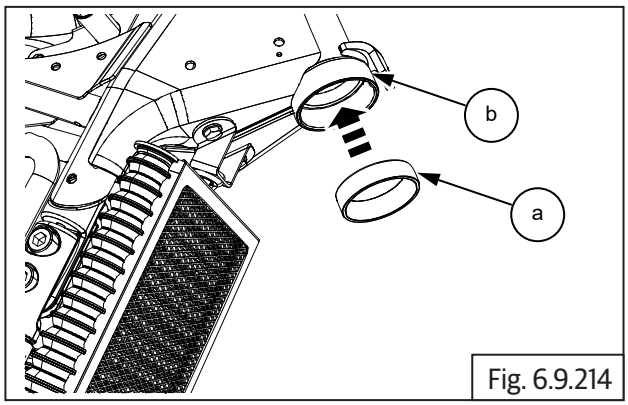

Fig. 6.9.214

- Locate special tool on bearing cup bottom and tap bearing cup into frame head tube.

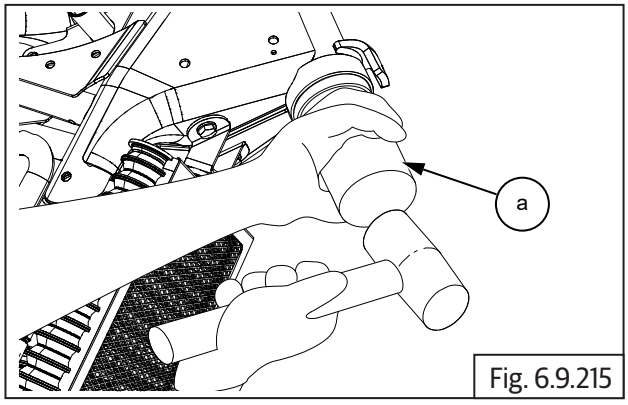

Fig. 6.9.215

SPL	Part No: ST30273/a
	Part Name: Headstock - Frame cone installer

- Locate top bearing cup **(a)** on the frame head tube top **(b)**.

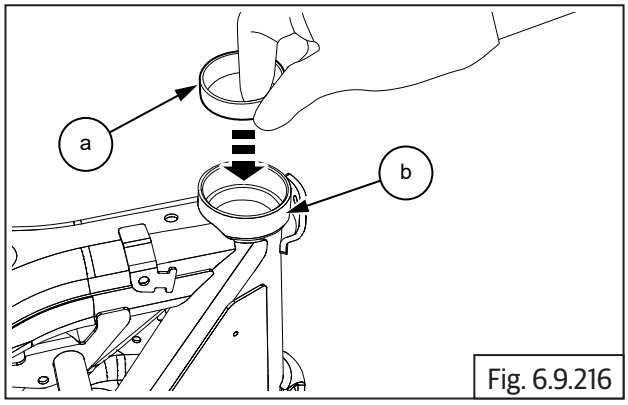

Fig. 6.9.216

- Locate special tool on bearing cup top and tap bearing cup into frame head tube.

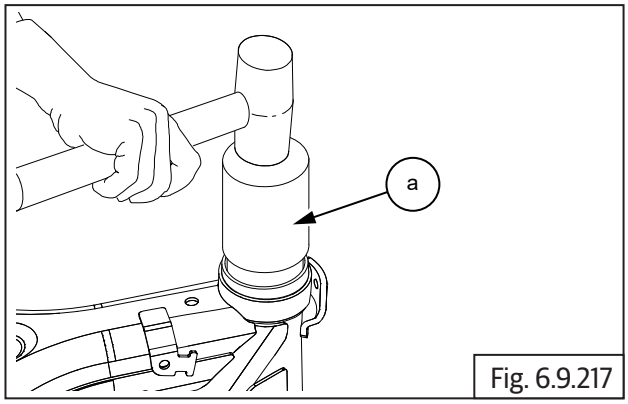

Fig. 6.9.217

SPL	Part No: ST30273/a
	Part Name: Headstock - Frame cone installer

6.9.17. Steering Stem on Frame Head Tube

- Apply Royal Enfield recommended grease on the bearing cups inner surface.
- Insert steering stem **(a)** into frame head tube from the bottom.

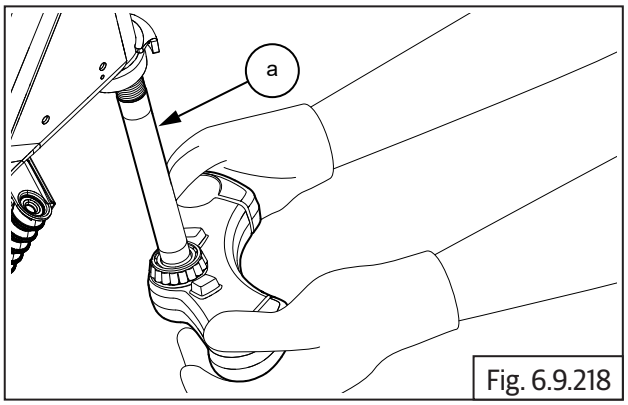

Fig. 6.9.218

⚠ CAUTION

Support steering stem from bottom. DO NOT allow the steering stem to drop out of frame head tube.

- Assemble headstock seal with the taper facing downwards **(a)**.

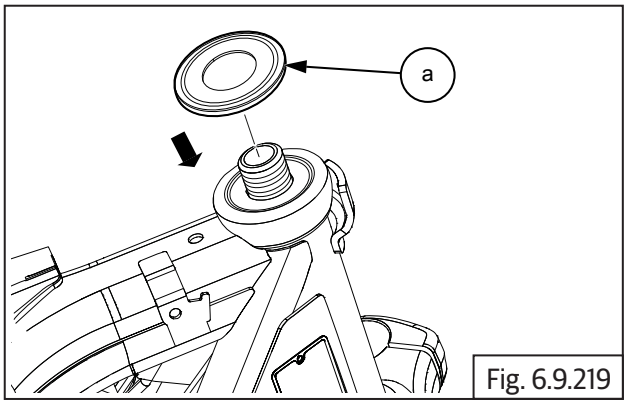

Fig. 6.9.219

- Assemble headstock cover **(a)** with the cup facing downwards.

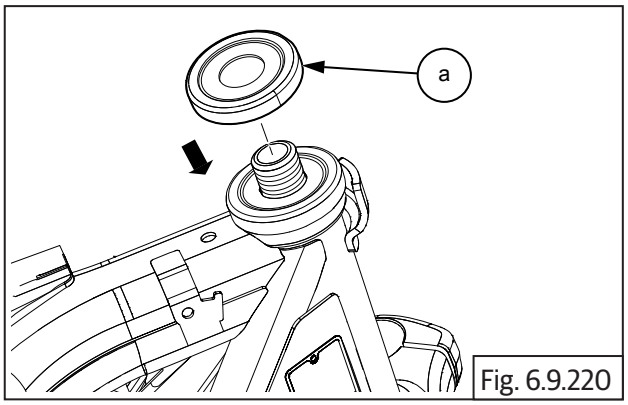

Fig. 6.9.220

- Assemble stem nut **(M12) (a)** on steering stem and tighten.

Check the following

- Check the free movement of steering stem from left to right.
- Check axial play of steering stem at center, extreme left and right positions.
- Check lateral play of steering stem at center, extreme left and right positions.

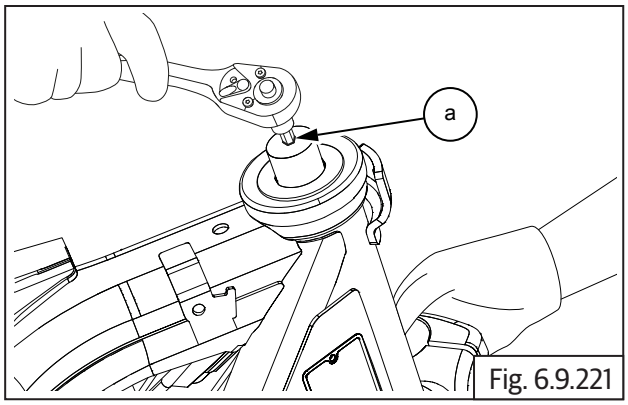

Fig. 6.9.221

- Tighten or loosen stem nut to ensure no axial or lateral movement is present and the steering movement is smooth.

⚠ CAUTION
DO NOT over tighten the nut. Over/under torquing will lead to improper adjustment of steering stem. **Check for smooth turning in left and right directions and tighten just sufficiently.**

	8 mm Allen socket with Ratchet
Torque	8 N·m/0.8 kgf-m

6.9.18. Top Yoke on steering stem

- Locate top yoke **(a)** over stem nut and ensure it is seated fully.

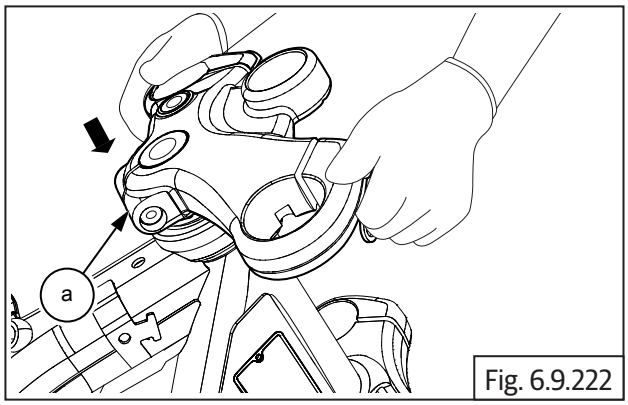

Fig. 6.9.222

- Assemble hex socket bolt **(M8) (a)** into top yoke from RH side and tighten just sufficiently. **DO NOT TIGHTEN THE BOLT TO TORQUE**.

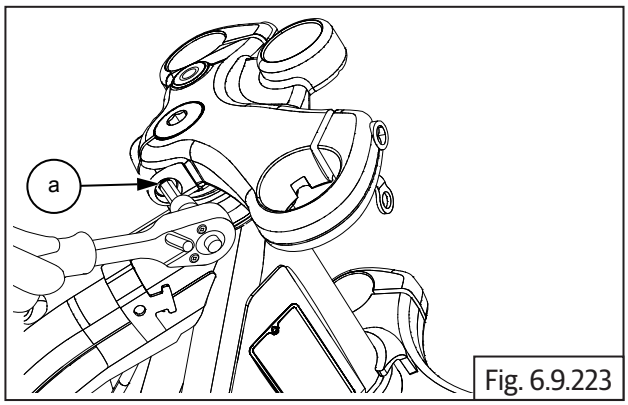

Fig. 6.9.223

	6 mm Allen socket with Ratchet
Torque	20 N·m/2.0 kgf-m

6.9.19. Front Fork Sub Assembly LH and RH

- Assemble spring **(a)** into piston from the bottom end **(b)**.

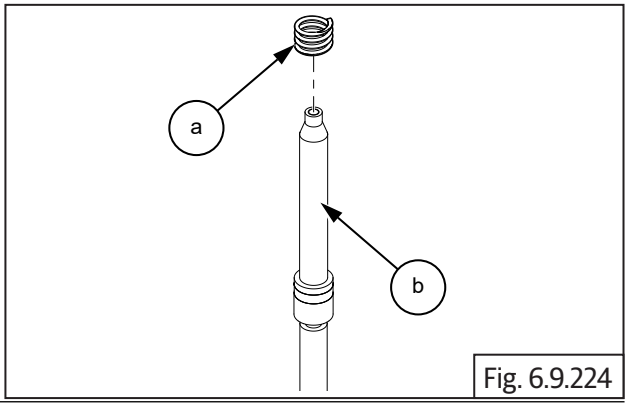

Fig. 6.9.224

- Locate special tool **(a)** on piston **(b)** with the piston facing upwards.

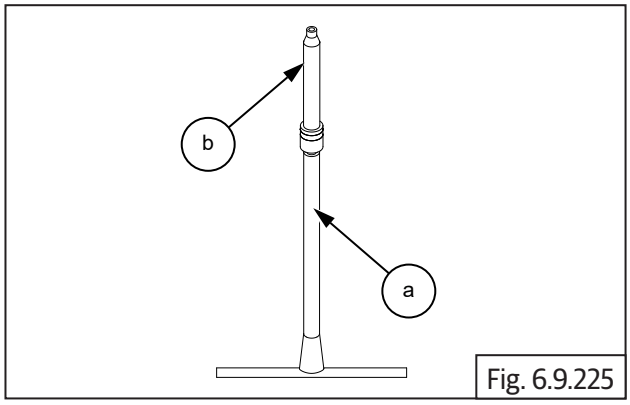

Fig. 6.9.225

SPL	Part No: ST26461-2
	Part Name: Fork damper tube holder

- Assemble slide bush **(a)** into main tube **(b)** from fork top.

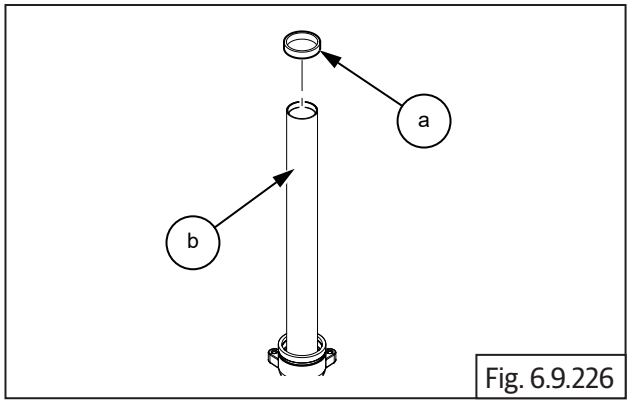

Fig. 6.9.226

- Assemble fork main tube **(a)** on piston **(b)** with the threads on the main tube inner facing downwards. Ensure the piston is guided out of the main tube.

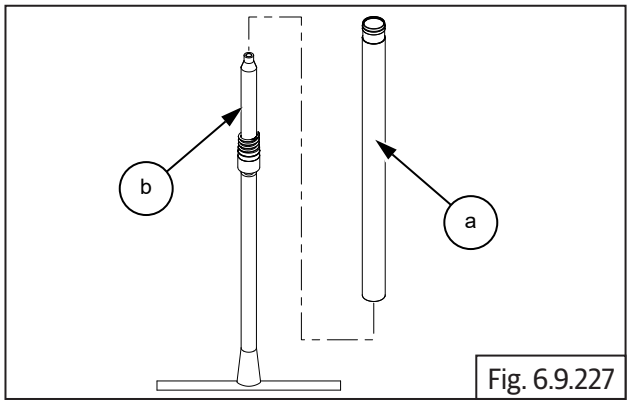

Fig. 6.9.227

SPL	Part No: ST26461-2
	Part Name: Fork damper tube holder

- Assemble taper oil lock **(a)** on piston **(b)**. Apply little grease to lock on its place.

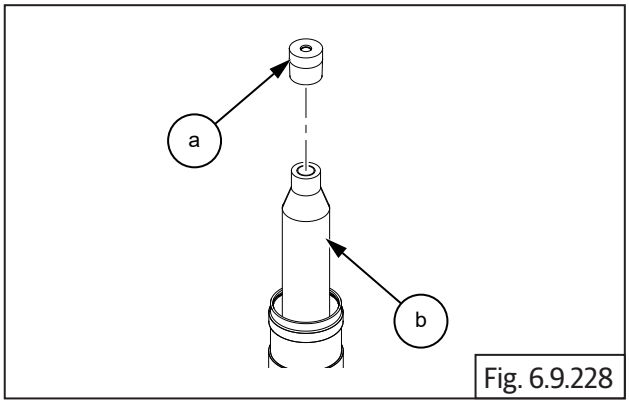

Fig. 6.9.228

- Assemble bottom tube top **(a)** over main tube **(b)**. Ensure it is seated on taper oil lock.

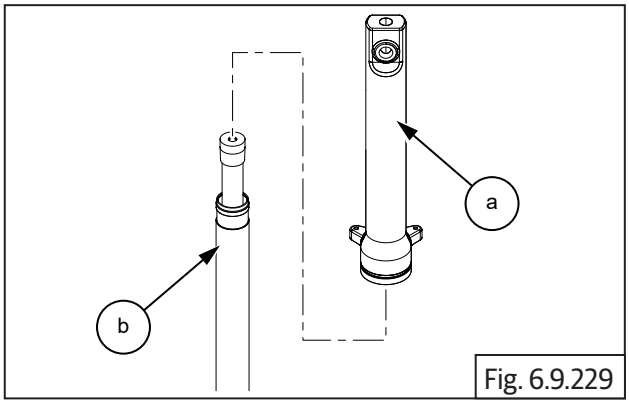

Fig. 6.9.229

- Locate hex socket head screw **(M6) (a)** along with washer **(b)** into mounting hole in bottom tube and tighten to torque.

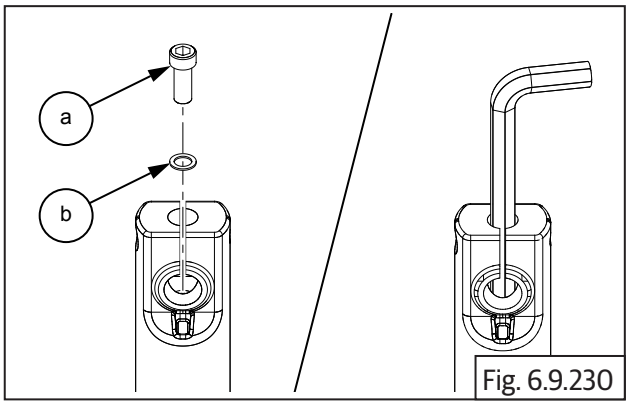

Fig. 6.9.230

	5 mm Allen socket with Ratchet
Torque	10 N·m/2.0 kgf-m

- Remove the special tool.
- Insert washer **(a)** on the main tube **(b)** and ensure proper seating into the bottom tube.

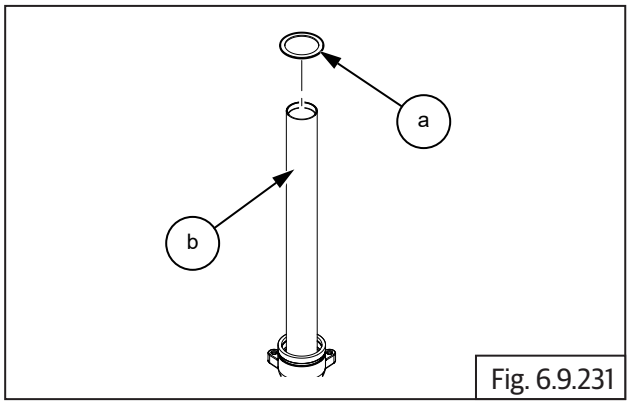

Fig. 6.9.231

- Assemble oil seal **(a)** on main tube **(b)** with the lip facing upwards.

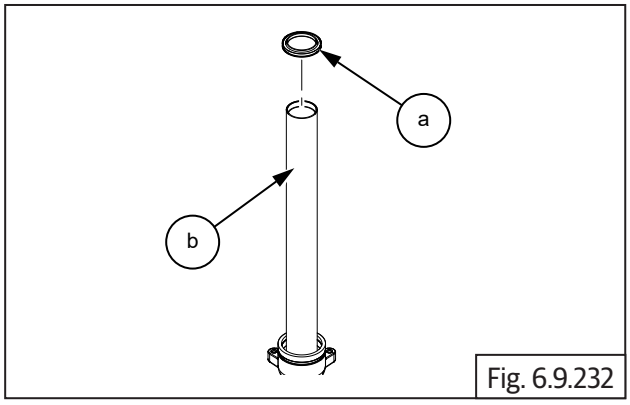

Fig. 6.9.232

- Locate special tool **(a)** on main tube and drive oil seal into bottom tube till it is seated fully and the seal clip groove in bottom tube is visible.

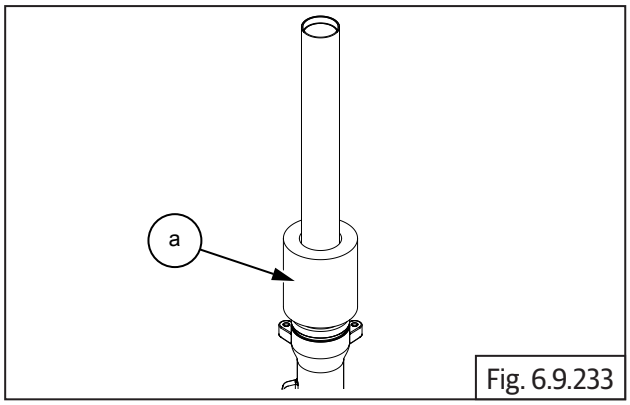

Fig. 6.9.233

SPL	Part No: ST26485-3
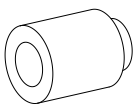	Part Name: Fork oil seal installer

- Remove special tool from fork inner tube.
- Assemble seal clip **(a)** over oil seal and ensure it is seated properly on the grove in bottom tube.

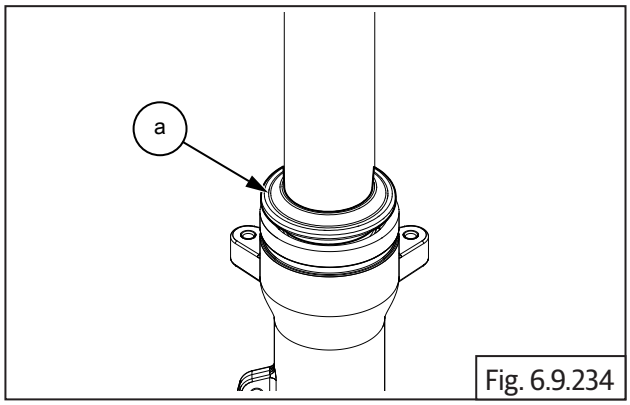

Fig. 6.9.234

- Assemble dust seal **(a)** from main tube top **(b)** with closed ends upwards. Using special tool **(c)**, drive dust seal into bottom tube till it is flush with top surface of bottom tube.

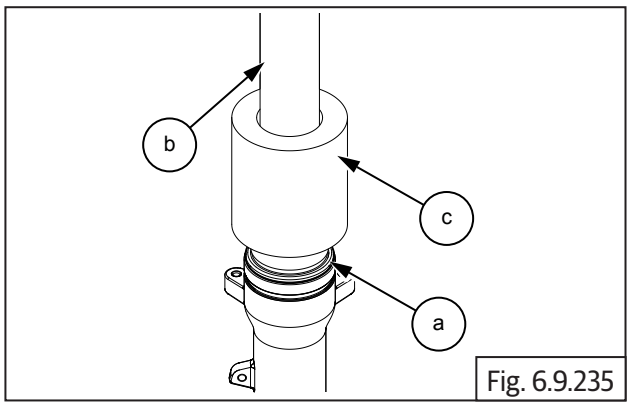

Fig. 6.9.235

SPL	Part No: ST26485-3
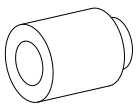	Part Name: Fork oil seal installer

- Ensure free up and down movement of the main tube into bottom tube.
- Holding bottom tube, gently pull out main tube to its maximum stop ends position.
- Insert spring **(a)** into main tube with its closed coils facing downwards.

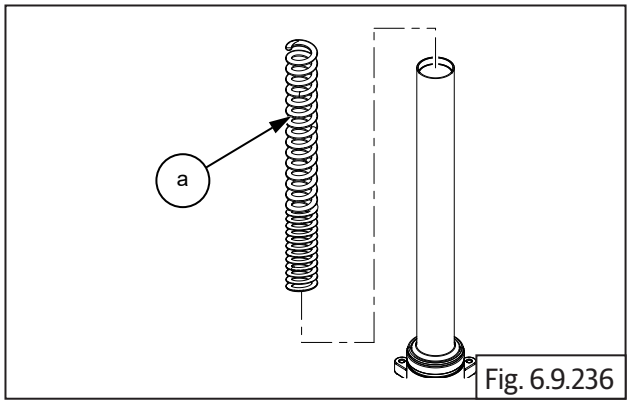

Fig. 6.9.236

- Fill recommended fork oil into main tube.

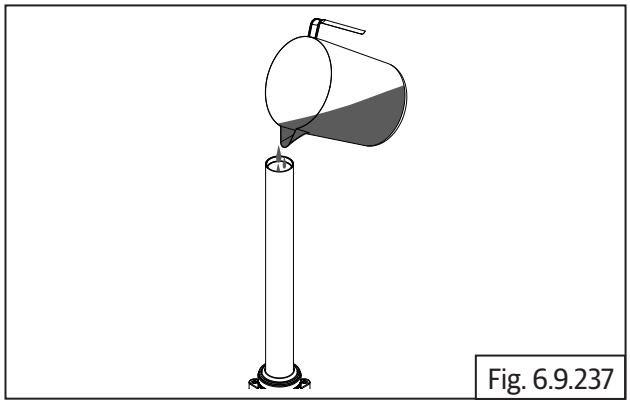
Fig. 6.9.237

Quantity:	473 ml/fork
Oil grade:	2w25

- Replace with new oil whenever the oil drained from fork.
- Check oil quantity and fill with recommended fork oil with specified grade. Specified oil grade: 10Wt (Fork Oil Quantity = 430 ml per fork).
- Insert steel plate **(a)** into main tube over spring top.

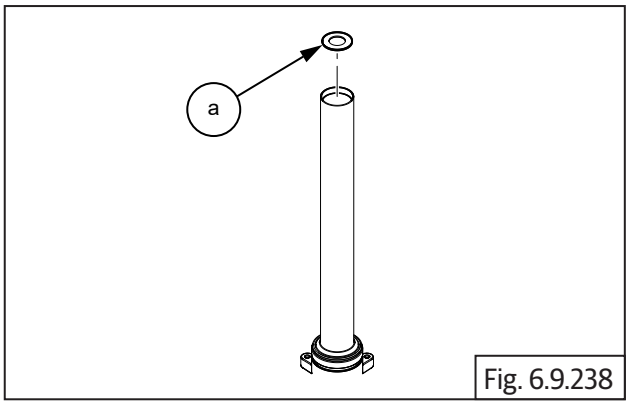

Fig. 6.9.238

- Assemble spacer tube **(a)** into main tube.

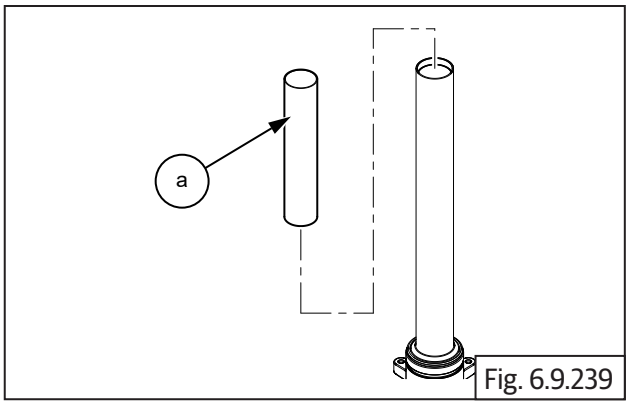

Fig. 6.9.239

- Assemble plain washer **(a)** over spacer tube.

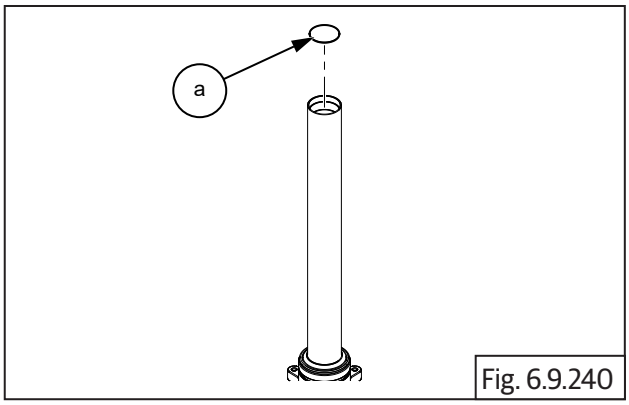

Fig. 6.9.240

- Locate O-ring **(a)** on cap nut **(b)**, position it over washer correctly, gently push down cap nut till threads engage in main tube **(c)** and tighten fully.

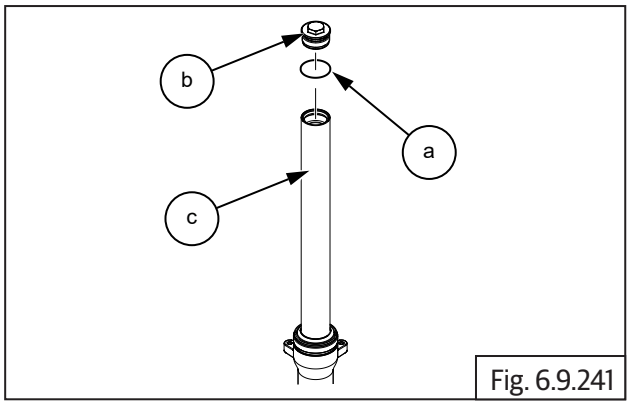

Fig. 6.9.241

	22 mm Ring spanner
Torque	20 N-m/2.0 kgf-m

⚠ CAUTION

Ensure thread are engaged correctly to prevent damage to cap nut/main tube threads

6.9.20. Front Fork LH and RH Assembly on Motorcycle

- Ensure pinch bolts on LH and RH sides of the steering stem and top yoke are sufficiently loose.
- Ensure the steering stem and top yoke fork mounting holes are aligned.
- Position headlamp holder RH between steering stem and top yoke.

NOTE

- *Ensure pinch bolt on headlamp RH is loose.*

For continental GT

- Position clip on RH between headlamp holder and top yoke duly ensuring peg on clip on is located into top yoke correctly.

NOTE

- *Ensure the pinch bolt on clip on is loose.*

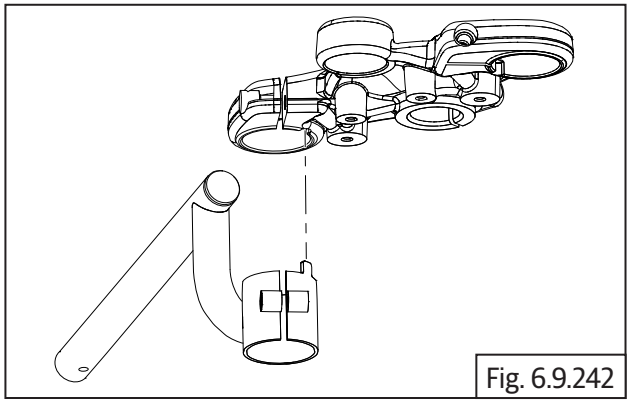
Fig. 6.9.242

- Insert fork assembly RH **(a)** into steering stem **(b)**, headlamp holder, handlebar clip on and top yoke.

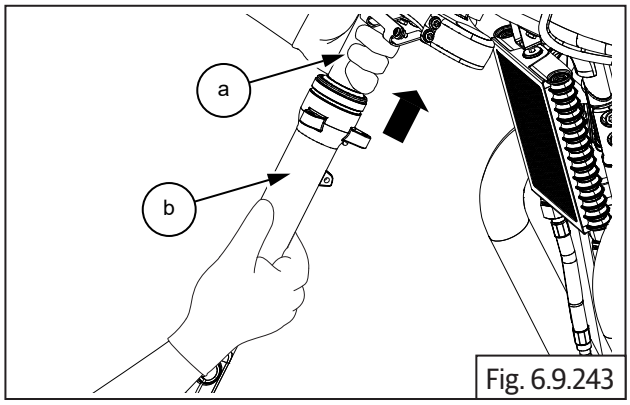

Fig. 6.9.243

- Gently tighten one of the pinch bolt in steering stem RH to prevent fork from dropping down.
- Repeat above process to assemble fork assembly LH.
- Ensure fork assembly RH and LH top is **10 mm** above and hex cap nut is above the top yoke.

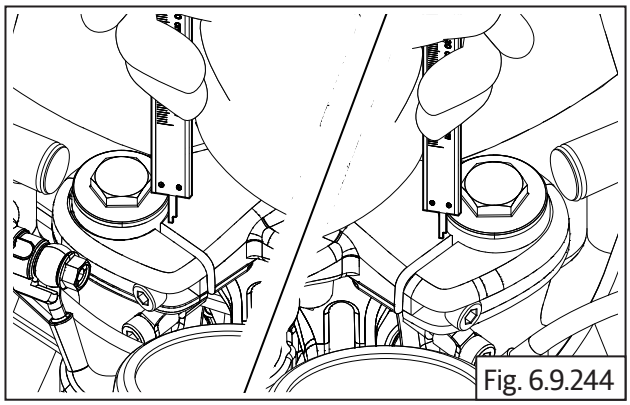
Fig. 6.9.244

- Tighten 4 Nos. Hex socket head bolts **(M8) (a)** each on the steering stem and top yoke LH and RH sides.

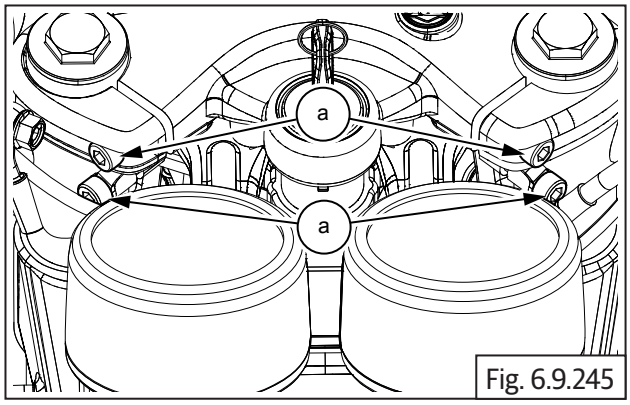

Fig. 6.9.245

	6 mm Allen socket with Ratchet
Torque	20 N-m/2.0 kgf-m

- **For Continental GT:** Ensure the locking peg of clip on RH/LH are correctly seated in the slot in top yoke and tighten pinch bolts.
- **For Interceptor:** Position handlebar on top yoke, ensure the reference marks on the handlebar are correctly aligned with mounting bracket face on top yoke.
- Assemble clamp handlebar and tighten with 4 Nos. Hex socket screws **(M8) (a)**.

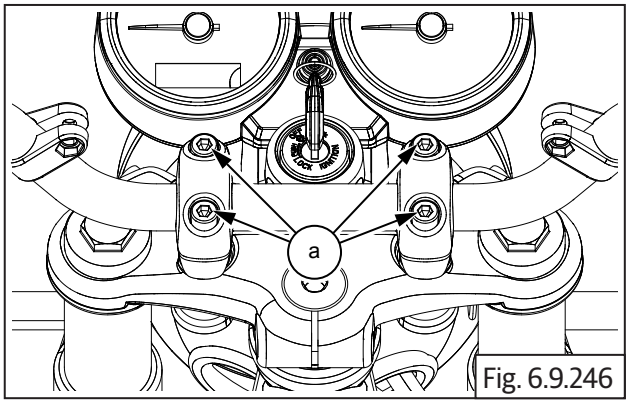

Fig. 6.9.246

	6 mm Allen socket with Ratchet
Torque	20 N-m/2.0 kgf-m

- Position headlamp holder such that it is **58 mm** from the steering stem top face.

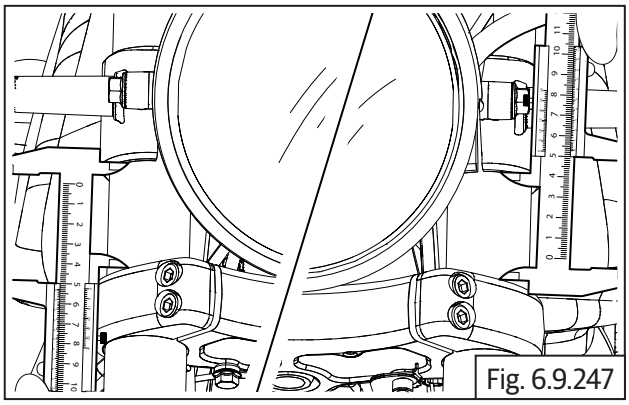
Fig. 6.9.247

	Vernier caliper

- Tighten the 2 Nos. pinch bolt **(M6) (a)** in headlamp holder.

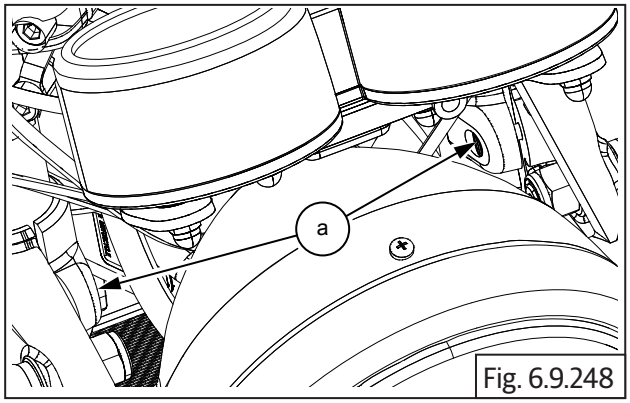

Fig. 6.9.248

	5 mm Allen key
Torque	3 N-m/0.3 kgf-m

- Repeat above process for correct positioning of other headlamp holder.
- Reassemble the following parts:
  - Assemble Ignition switch and connect wiring connector (section 11.12.2).
  - Instrument cluster and connect wiring connector (section 11.12.5).
  - Trafficators LH and RH and connect wiring coupler (section 11.9.1).
  - Headlamp assembly (section 11.12.1).
  - Headlamp housing between headlamp holder LH and RH (section 11.12.4).
  - Front number plate - India (section 6.6.16).
  - Front mudguard (section 6.6.15).
  - Wheel caliper on fork end LH (section 9.2.8).
  - ABS wheel speed sensor on fork end LH (section 9.3.9).
- Position brake hose and ABS wheel speed sensor in the clamps on the LH side.
- Locate wheel speed sensor on RH side of the wheel hub, position front wheel between fork ends, ensure speed sensor is correctly positioned against fork end RH. Insert front wheel axle into fork end and tighten to torque (section 6.8.13).
- Support motorcycle underneath cradle frame such that front wheel is off the ground by minimum 6 inches/15 cm.

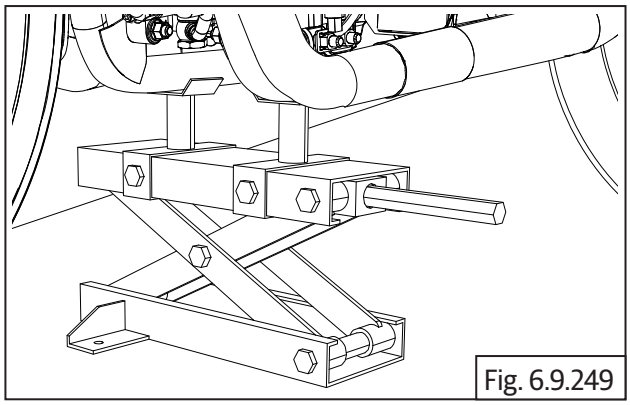
Fig. 6.9.249

- Turn handlebar to extreme left and right position and check for free and smooth rotation.
- Hold the front wheel straight ahead, check for any play.
- Gently push front wheel upwards and release, check for any play.
- Tighten pinch bolt **(a)** on top yoke to torque.

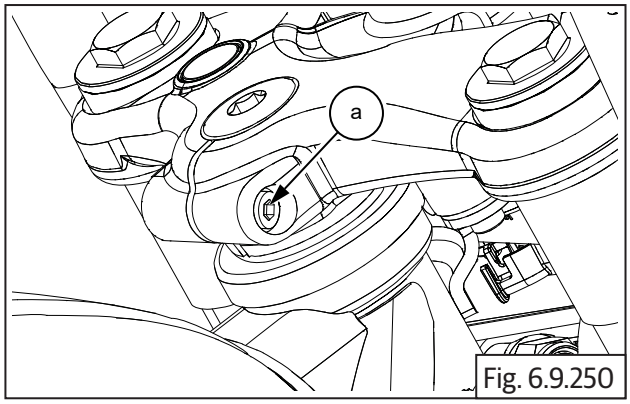

Fig. 6.9.250

	6 mm Allen socket with Ratchet
Torque	20 N-m/2.0 kgf-m

6.9.21. Steering Stem Play Adjustment

- Ensure the motorcycle is on a firm and flat surface.
- Ensure front wheel is off the ground. Turn handlebar to extreme LH and RH side to check for free movement. Hold handlebar in straight position and gently lock the motorcycle keeping a finger underneath top yoke to check for any axial or lateral movement.

- If movement is found adjust as follows:
- Loosen pinch bolt **(a)** on top yoke.

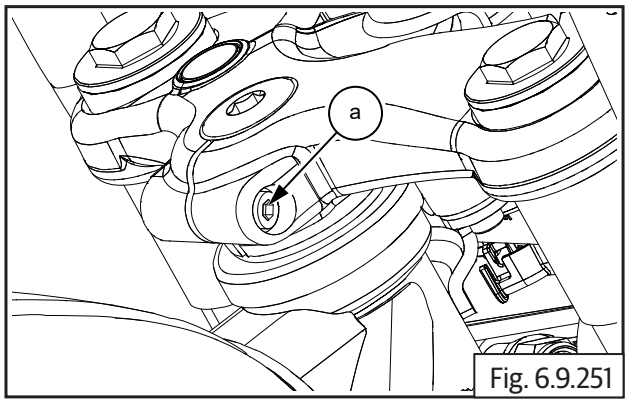

Fig. 6.9.251

	6 mm Allen socket with Ratchet

- Loosen 4 Nos. Pinch bolts **(M6) (a)** on top yoke LH and RH side (fork main tube area).

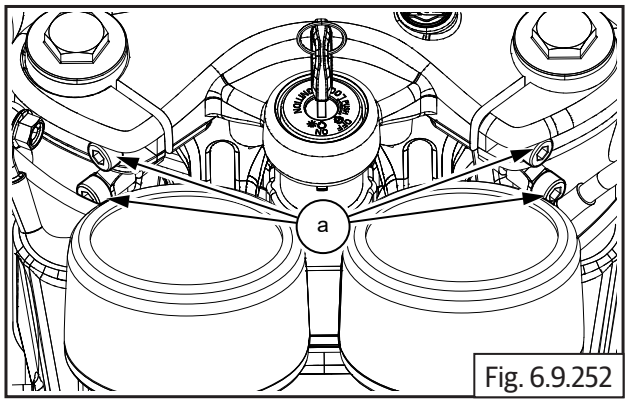

Fig. 6.9.252

	5 mm Allen socket with Ratchet

- Locate Allen socket on stem nut **(M12) (a)** and tighten gently.

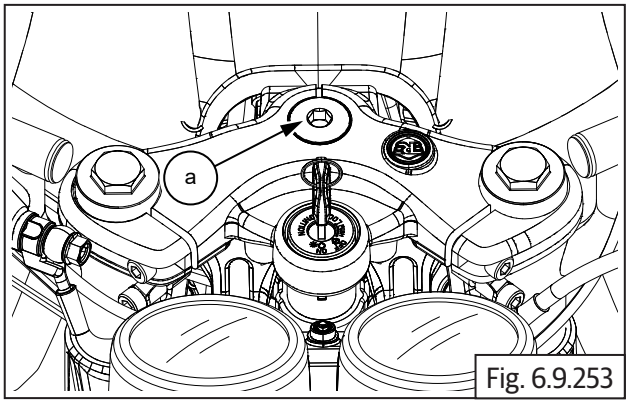

Fig. 6.9.253

	10 mm Allen socket with Ratchet
Torque	8 N-m/0.8 kgf-m

NOTE
• *After a set torque of 8 N-m do not steer the motorcycle.*

- Check for free rotation and no axial or lateral movements.
- Tighten pinch bolt on top yoke and stem nut.
- Tighten 4 Nos. pinch bolts to specified torque 20 N-m/2.0 kgf-m.

Troubleshooting

Symptom	Possible Cause	Diagnosis	How to Fix	Recommended Specification
1. Front Fork/Steering Stem Related				
Oil leak from fork assembly LH/RH	Excessive oil is filled.	Excessive oil is filled in fork legs.	Dismantle fork legs, drain oil and fill correct recommended oil quantity.	Royal Enfield front fork oil 2W 25. Quantity 473 ml/ fork.
	Oil leaks from top cap nut.	Cap nuts are loose/sealing washer is damaged.	Tighten Cap nuts/replace sealing washer.	
	Oil leaks between main tube and guide tube is faulty.	Oil seals are worn-out or not seated evenly/loose in guide tubes.	Dismantle fork legs and replace oil seals.	
	Oil leaks from guide tube bottom.	Oil leaks from Hex socket bolt at the bottom of guide tube.	Dismantle fork legs and replace sealing washer bottom and reassemble.	
Hitting noise from front fork/s	Oil quantity is less in one/both fork legs.	Oil quantity mismatched between LH and RH fork assemblies.	Dismantle fork legs, drain oil and fill with correct recommended quantity.	Royal Enfield front fork oil 2W 25. Quantity 473 ml/ fork.
	Fork main springs have become soft/ coils are broken/ length is reduced.	Fork main springs have lost tension/Overall length of the main springs is reduced/coils are broken.	Dismantle fork legs and replace fork main springs.	Main spring length: 303 ± 3.0mm.
	Rebound spring has become soft/broken/ length is reduced.	Rebound springs have lost tension/overall length is reduced/coils are broken.	Dismantle fork legs and replace rebound springs.	
	Taper oil lock is not seated properly/is loose on piston tube.	Taper oil lock is seated unevenly/loose in piston tube/hex socket bolt at fork end bottom is loose.	Dismantle fork leg assemblies, check for uneven seating/loose fittings and replace taper oil lock/fork piston assembly.	
Fork action is soft	Oil quantity is less in one/both fork legs.	Oil quantity mismatched between LH and RH fork assemblies.	Dismantle fork legs, drain out oil and fill with correct recommended quantity.	Royal Enfield front fork oil 2W 25. Quantity 473 ml/ fork.
	Fork main springs are soft/coils are broken/ length is reduced.	Fork main springs have lost tension/overall length of main springs is reduced/coils are broken.	Dismantle fork legs and replace fork main springs.	Main spring length: 303 ± 3.0mm.

Symptom	Possible Cause	Diagnosis	How to Fix	Recommended Specification
Fork action is hard	Excessive oil is filled in fork assembly LH/ RH.	Excessive oil is filled in the fork legs.	Dismantle fork legs, drain oil and fill with correct recommended quantity.	Royal Enfield front fork oil 2W 25. Quantity 473 ml/ fork.
	Fork main tube movement in fork ends is sticky.	Fork main tube is bent.	Dismantle fork legs, check main tube for straightness and replace main tubes.	
		Fork end tubes are damaged.	Dismantle fork legs, check fork ends inside for excessive wear-out.	
Riding is unstable	Tyre seating on rims is improper.	Tyre bead is uneven at the rim surface.	Remove tyre and reassemble correctly.	
	Wheel rims are out of trueness.	Wheel rims are bent/have excessive run-out.	Remove tyre and true the wheel rim correctly.	
	Wheel rims have a crack/heavy damage.	Wheel rims have been cracked/damaged due to impact.	Replace with Royal Enfield genuine wheel rims.	
	Spokes are broken.	One/several spokes are broken.	Replace spokes and correct wheel trueness.	
	Wheels have excessive axial/side play.	Wheel bearings are worn-out	Remove bearing and replace	
	Hubs front/rear are cracked/damaged	Wheel hubs are damaged due to impact.	Replace with Royal Enfield genuine hubs.	
	Oil quantity is mismatching in LH and RH fork legs.	Oil quantity mismatched between LH and RH fork assemblies.	Dismantle fork legs, drain oil and fill with correct recommended quantity.	Royal Enfield front fork oil 2W 25. Quantity 473 ml/ fork.
	Fork main springs have become soft/ coils are broken/ length is reduced.	Fork main springs have lost tension/Overall length of the main springs is reduced/coils are broken.	Dismantle fork legs and replace fork main springs.	Main spring length: 303 ± 3.0mm.
	Fork main tube movement in fork end is sticky.	Fork main tube is bent.	Dismantle fork legs, check main tube for straightness and replace main tubes.	
		Fork end tubes are damaged.	Dismantle fork legs, check fork ends inside for excessive wear-out and replace.	
	Steering stem movement is not smooth.	Control cables/wiring harness is not routed properly.	Route the control cables/ wiring harness correctly and strap to frame.	
		Steering stem nut is excessively tightened.	Adjust the steering stem nut correctly.	
		Steering stem bearings rollers have sticky movement/is rusted/bearing is damaged/uneven seating.	Dismantle steering stem and replace bearings.	
	Steering stem is bent.	Steering stem is bent.	Replace steering stem.	

Symptom	Possible Cause	Diagnosis	How to Fix	Recommended Specification
Vehicle is pulling to one side	Tyre pressures are less/more than recommended.	Front and rear tyre pressures are under/over inflated.	Ensure correct tyre pressures.	**Solo:** Front tyre: 32 psi/2.2 kg/cm^2. Rear tyre: 36 psi/2.53 kg/cm^2. **With Pillion:** Front tyre: 32 psi/2.2 kg/cm^2. Rear Tyre: 39 psi/2.74 kg/cm^2.
	Wheels alignment is not proper.	Front and rear wheels are not aligned.	Align front and rear wheels correctly.	
	Oil quantity is mismatching in LH and RH fork legs.	Oil quantity is mismatched between LH and RH fork assemblies.	Dismantle fork legs, drain out the oil and fill with correct recommended quantity.	Royal Enfield front fork oil 2W 25. Quantity 473 ml/ fork.
	Fork main springs have become soft/ coils are broken/ length is reduced.	Fork main springs have lost tension/Overall length of the main springs is reduced/coils are broken.	Dismantle fork legs and replace fork main springs.	Main spring length: 303 ± 3.0mm.
	Steering movement is hard.	Steering stem nut is excessively tightened.	Adjust steering stem nut correctly.	
		Steering stem bearings rollers have sticky movement/are rusted/ bearing is damaged/uneven seating.	Dismantle steering stem and replace bearings.	
	Vehicle met with an accident.	Fork main tube is bent.	Dismantle fork legs, check main tube for straightness and replace main tubes.	
		Fork end tubes are damaged.	Dismantle fork legs, check fork ends inside for excessive wear-out and replace.	
		Steering stem is bent.	Replace steering stem	
		Main frame is bent.	Check main frame for impact/bends and replace.	
2. REAR SHOCK ABSORBER/SWINGARM RELATED				
Rear suspension is noisy	Rear shock absorbers bushes are worn-out/ damaged.	Shock absorbers have excessive radial/axial play on top/bottom mounting bolts due to bush damage.	Replace both shock absorbers as a set.	
	Rear shock absorbers are misaligned.	Top/bottom mounting locations of shock absorbers are misaligned.	Check top and bottom mounting points for any misalignment. Replace swingarm if it is bent.	
	Rear swingarm bushes are defective.	Rear swingarm bushes are rusted/jammed.	Replace swingarm bushes and axle.	

Symptom	Possible Cause	Diagnosis	How to Fix	Recommended Specification
Rear suspension is too soft	Shock absorber spring is preloaded at Min position.	Rear shock absorber spring preload is adjusted to soft position.	Adjust shock absorber spring preload evenly on both LH and RH side for the desired riding comfort and road conditions.	
	Shock absorbers are weak.	Rear shock absorbers have oil leakage/springs are very soft.	Replace both shock absorbers as a set.	
	Rear swingarm bushes are defective.	Rear swingarm bushes are worn-out.	Replace swingarm bushes and axle.	
Rear suspension is too hard	Shock absorbers spring is preloaded at Max position.	Rear shock absorbers spring preload is adjusted to maximum hard position.	Adjust shock absorber spring preload evenly on both LH and RH side for desired riding comfort and road conditions.	
	Shock absorbers are defective.	Rear shock absorbers compression is very hard.	Replace both shock absorbers as a set.	
	Rear swingarm bushes are defective.	Rear swingarm bushes are rusted/jammed .	Replace swingarm bushes and axle.	
Rear tyre worn-out on one side	Rear shock absorbers spring preload adjustment is mismatching between LH and RH shock absorbers.	Spring preload adjustments are not at same position on LH & RH shock absorbers.	Adjust shock absorber spring preload evenly on both LH and RH side for desired riding comfort and road conditions.	
	Rear wheel bearings are defective.	Rear wheel bearings are worn-out/have excessive side play.	Replace wheel bearings.	
	Rear swingarm is defective.	Rear swingarm is bent (LH & RH arms not at same level).	Replace swingarm assembly.	
Vehicle skids when rear brake is applied	Wheels alignment is not proper.	Front and rear wheels are not aligned.	Align front and rear wheels.	
	Rear wheel bearings are defective.	Rear wheel bearings are worn-out/have excessive side play.	Replace wheel bearings.	
	Rear shock absorbers spring preload adjustment is mismatching between LH and RH shock absorbers.	Spring preload adjustments are not at same position on LH & RH shock absorbers.	Adjust shock absorber spring preload evenly on both LH and RH side for desired riding comfort and road conditions.	
	Rear swingarm bushes are defective.	Rear swingarm bushes are worn-out.	Replace swingarm bushes and axle.	
	Rear swingarm is defective/rubbing on frame on one side.	Rear swingarm is bent (LH & RH arms are not at same level).	Replace swingarm assembly.	
Rear swingarm has excessive side play	Rear swingarm mounting to frame is loose.	Rear swingarm axle nut is loose.	Check and correct swingarm alignment to frame and tighten swingarm mountings.	
	Rear swingarm bushes are defective	Rear swingarm bushes are rusted/jammed.	Replace swingarm bushes and axle.	

Symptom	Possible Cause	Diagnosis	How to Fix	Recommended Specification
3. TYRES RELATED				
Rear tyre is worn-out on one side.	Improper wheel alignment.	Rear wheel is misaligned with respect to front wheel.	Check and correct wheel alignment.	
Tyre wearing out unevenly/ vehicle is unstable/ wobbling	Internal defect/poor quality tyre.	Tyres found to have bulges/ cracks in side wall. Threads are separated from the tyre.	Replace with Royal Enfield recommended tyres.	**Front tyre:** 100/90-18, Pirelli Phantom Sports Comp **Rear tyre:** 130/70-18, Pirelli Phantom Sports Comp
	Tyre seating on rims is improper.	Tyre bead is uneven at the rim surface.	Remove tyre and reassemble correctly.	
	Wheel rims have a defect.	Wheel rims are bent/have excessive run-out.	Remove tyre. Carry out proper wheel truing.	
	Rims have excessive side play.	Wheel bearings are worn-out/have excessive play.	Remove and replace wheel bearings.	
4. WHEEL RIMS RELATED				
Vehicle is unstable/ wobbling	Tyre seating on rims is improper.	Tyre bead is uneven at the rim surface.	Remove tyre and reassemble correctly.	
	Wheel rims are out of trueness.	Wheel rims are bent/have excessive run-out.	Remove tyre and true the wheel rim correctly.	
	Wheel rims have a crack/heavy damage.	Wheel rims are cracked/ damaged due to impact.	Replace with Royal Enfield genuine wheel rims.	
	Spokes are broken	One/several spokes are broken.	Replace spokes and correct wheel trueness.	
	Wheels have excessive axial/side play.	Wheel bearings are worn-out.	Remove bearing and replace.	
	Hubs front/rear are cracked/damaged.	Wheel hubs are damaged due to impact.	Replace with Royal Enfield genuine hubs.	

VEHICLE TROUBLESHOOTING

CONTENTS **PAGE**

6.10. Troubleshooting 509

6.10.1. Air Filter 509

6.10.2. Control Cables 510

6.10.3. Handlebar 512

6.10.4. Exhaust Pipes and Silencers 513

6.10.5. Wheels 514

6.10.6. Suspension 516

6.10. Troubleshooting

6.10.1. Air Filter

Symptom	Possible Cause	Diagnosis	How to Fix	Recommended Specification
Air induction noise from air filter box is high	Air filter element cover not sealing properly on air filter box assembly	Air filter element cover not seated properly on air filter box assembly/ improperly tightened	Check proper seating of the air filter element cover on air filter box assembly	
	Air filter element cover cracked	Air filter element cover cracked due to improper assembly/over tightened	Replace air filter box assembly	
	Air filter box assembly cracked/damaged	Air filter box assembly not aligned properly and tightened/damaged due to stone hit	Replace air filter box assembly	
	Hoses connecting to inlet manifold cracked	Cracked due to age hardening/improper assembly	Replace air filter box assembly	
Engine running very sluggish and pick up poor	Filter element choked	Filter element choked with dirt/water/oil	Check and replace filter element	
Engine misfiring/ running lean/idling improper	Rubber hoses connecting from air filter box assembly to acv, iac, throttle body, cracked/disconnected/ not sealing properly	Check and inspect each hose for no damage/ cracks/proper fitting	Check and replace hose/s, and/or air filter body as required	
	Filter element damaged	Damaged due to mishandling/heavy particles entering air filter box assembly	Check and replace filter element	
	Iat sensor not sealing properly	Iat sensor sealing gasket damaged/mounting screws loose	Check and replace iat sensor gasket/sensor	
	Acv not sealing properly	Acv sealing gasket damaged/mounting screws loose	Check and replace acv gasket/sensor	

Symptom	Possible Cause	Diagnosis	How to Fix	Recommended Specification
Engine oil accumulation inside air filter box assembly	Excessive oil in sump	Check and maintain correct engine oil level	Clean breather chamber and hose leading to air filter box assembly	

6.10.2. Control Cables

Symptom	Possible Cause	Diagnosis	How to Fix	Recommended Specification
Clutch lever movement not smooth	Clutch lever operation at handlebar end is sticky	Clutch lever, bracket and pivot screw at handlebar end is dry without lubrication/excessive dirt accumulation	Clean and lubricate clutch lever, bracket and pivot screw at handlebar end	
	Clutch lever excessive movement in handlebar bracket LH	Clutch lever mounting hole is out of shape/fixing bolt worn-out	Check and replace clutch lever bracket assembly	
	Inner cable movement sticky in outer cable	Inner cable strands broken and jammed inside outer cable/clutch lever bracket	Check and replace clutch cable	
		Teflon tube inside outer cable torn/damaged	Check and replace clutch cable	
	Clutch shaft movement sticky in cover RH	Poor/no lubrication of the clutch shaft in cover RH/ uneven wear-out of clutch shaft/cover RH	Check and replace clutch shaft/cover RH	
	Clutch plates movement in clutch housing is sticky	Clutch plates/clutch housing damaged	Check and replace clutch plates/clutch assembly	

Symptom	Possible Cause	Diagnosis	How to Fix	Recommended Specification
Clutch operation hard	Clutch lever movement in bracket hard	Clutch lever, bracket and pivot screw at handlebar end is dry without lubrication/excessive dirt accumulation	Clean and lubricate clutch lever, bracket and pivot screw at handlebar end	
	Inner cable movement sticky in outer cable	Inner cable strands broken and jammed inside outer cable/clutch lever bracket	Check and replace clutch cable	
		Teflon tube inside outer cable torn/damaged	Check and replace clutch cable	
	Clutch shaft movement hard in cover RH	Poor/no lubrication of the clutch shaft in cover RH/ uneven wear-out of clutch shaft/cover RH	Check and replace clutch shaft/cover RH	
	Clutch plates burnt and hard	Clutch plates burnt/hard/ clutch housing damaged	Check and replace clutch plates/clutch assembly	
Throttle rotor movement sticky/ opening hard	Throttle cables are stuck between frame and fuel tank	Throttle cables stuck/ jammed between frame and fuel tank	Check cable routing and proper strapping to frame	
	Throttle rotor movement in housing is sticky	Throttle rotor area in the housing is dry/heavy dirt accumulation	Check and lubricate throttle rotor and housing in handlebar	
	Throttle rotor cable seating area damaged	The eyelets in the throttle rotor are damaged/inner cable eyelets not seating correctly in the rotor eyelets	Check and replace throttle cables/throttle rotor	
	Inner cables movement sticky in outer cable	Throttle cables inner strands broken	Check and replace throttle cables	
		Teflon coating in between inner/outer throttle cables damaged		

6.10.3. Handlebar

Symptom	Possible Cause	Diagnosis	How to Fix	Recommended Specification
Vibrations transmitted to rider while riding	Tyre pressures are more than recommended.	Improper front and rear tyre pressures.	Ensure correct tyre pressures.	**Solo:** Front tyre: 32 psi/2.2 kg/cm^2. Rear tyre: 36 psi/2.53 kg/cm^2. **With Pillion:** Front tyre: 32 psi/2.2 kg/cm^2. Rear Tyre: 39 psi/2.74 kg/cm^2.
	Handlebar balancers are loose.	Balancer mountings are loose/threads are worn-out.	Tighten balancer mountings/replace balancers.	
	Continental GT 650 twin: Clip-on pinch bolts are loose on fork main tubes. Interceptor 650 Twin: Handlebar clamp fasteners are loose on top yoke.	Fasteners loose/ threads worn-out	Check and tighten fasteners/replace fasteners/handlebar clip-ons/top yoke	
	Handlebar is cracked at mounting location.	Clip-on/handlebar clamping locations has minor cracks.	Replace clip-ons/ handlebar	
Uneasiness/pain felt on one shoulder	Continental GT 650 twin: Clip-on/s are bent. Interceptor 650 Twin: Handlebar is bent/misaligned.	One or the other clip-on is bent/ handlebar is bent. Handlebar alignment dots are not correct.	Replace clip-ons/ handlebar. Ensure correct positioning of the handlebar alignment dots with respect to top yoke.	

6.10.4. Exhaust Pipes and Silencers

Symptom	Possible Cause	Diagnosis	How to Fix	Recommended Specification
Vibration/rattling noise from exhaust pipe/s.	Exhaust pipe mounting to cylinder head LH/ RH is loose.	Exhaust pipe/s flange mounting to cylinder head is loose/flange is cracked.	Check and tighten flange mounting to torque. Replace exhaust pipe if flange is cracked.	Torque: 25 N-m/2.5 kgf-m
	Exhaust pipe mounting to frame LH/RH is loose.	Fasteners are loose/ mounting clamps are cracked.	Check and tighten fasteners to torque. Replace clamps if they are cracked.	Torque: 25 N-m/2.5 kgf-m
Vibration/rattling noise from silencer/s.	Silencer mounting to frame LH/RH is loose.	Fasteners are loose/mounting clamps are cracked.	Check and tighten fasteners to torque Replace clamps/ silencer if they are cracked.	Torque: 25 N-m/2.5 kgf-m
	Internal baffles in silencer are broken.	Remove silencer and shake to check if internal baffles are cracked.	Replace silencer assembly.	
Exhaust leak from cylinder head joint/ silencer joint.	Gaskets are burnt/ missing.	Gaskets are burnt-out due to loose clamping of exhaust pipe/ silencer.	Replace exhaust pipe/silencer gaskets.	

6.10.5. Wheels

Symptom	Possible Cause	Diagnosis	How to Fix	Recommended Specification
1. Tyres Related				
Centre Threads Wear-Out Is High/ Poor Traction/ Unstable Riding	Tyre pressure is more than recommended.	Front and rear tyre pressure is over inflated.	Ensure correct tyre pressures.	Front tyre: 32 psi/2.2 kg/cm^2. Rear tyre: Solo: 36 psi/2.2 kg/cm^2 With Pillion: 39 psi/2.74 kg/cm^2.
Side Threads Wear-Out Is High/Side Wall Has Cracks/ Motorcycle Has Dragging/Unstable Riding	Tyre pressures is less than recommended.	Front and rear tyre pressures under inflated side walls have minute cracks.	Check inner tubes for any puncture/ leaky valve pins ensure correct tyre pressures.	Front tyre: 32 psi/2.2 kg/cm^2. Rear tyre: Solo: 36 psi/2.2 kg/ cm^2. With Pillion: 39 psi/2.74 kg/cm^2.
Rear Tyre Wear-Out On One Side	Improper wheel alignment.	Rear wheel misaligned with respect to front wheel.	Check and correct wheel alignment.	
Tyre/S Wearing Out Is Uneven/ Motorcycle Is Unstable/Wobbling	Internal defect/poor quality tyre.	Tyres found to have bulges/cracks in side wall. Threads are separated from the tyre.	Replace with Royal Enfield recommended tyres.	Front tyre: 100/90-18, Pirelli Phantom Sports Comp. Rear tyre: 130/70-18, Pirelli Phantom Sports Comp.
	Tyre seating on rims is improper.	Tyre bead is uneven at the rim surface.	Remove tyre and reset correctly.	
	Wheel rims have a defect.	Wheel rims are bent/ have excessive run-out.	Remove tyre and carry out proper wheel truing.	
	Rims have excessive side play.	Wheel bearings worn-out/excessive play.	Remove and replace wheel bearings.	

Symptom	Possible Cause	Diagnosis	How to Fix	Recommended Specification
2. Wheel Rims Related				
Motorcycle Is unstable/Wobbling	Tyre seating on rims is improper	Tyre bead is uneven at the rim surface	Remove tyre and reset correctly	
	Wheel rims are out of trueness	Wheel rims are bent/ have excessive run-out	Remove tyre and true the wheel rim correctly	
	Wheel rims have a crack/heavy damage	Wheel rims are cracked/damaged due to impact	Replace with royal enfield genuine wheel rims	
3. Others				
Motorcycle Is unstable/Wobbling	Spokes are Broken	One/several spokes are broken	Replace spokes and correct wheel trueness	
	Wheels have excessive axial/side play	Wheel bearings are worn-out	Remove bearing and replace	
	Hubs Front/rear are cracked/damaged	Wheel Hubs are damaged due to impact	Replace with Royal Enfield genuine hubs	

6.10.6. Suspension

Symptom	Possible Cause	Diagnosis	How to Fix	Recommended Specification
1. Front Fork/Steering Stem Related				
Oil leak from fork assembly LH/RH	Excessive oil is filled.	Excessive oil is filled in fork legs.	Dismantle fork legs, drain oil and fill correct recommended oil quantity.	Royal Enfield front fork oil 2W 25. Quantity 473 ml/ fork.
	Oil leaks from top cap nut.	Cap nuts are loose/sealing washer is damaged.	Tighten Cap nuts/replace sealing washer.	
	Oil leaks between main tube and guide tube is faulty.	Oil seals are worn-out or not seated evenly/loose in guide tubes.	Dismantle fork legs and replace oil seals.	
	Oil leaks from guide tube bottom.	Oil leaks from Hex socket bolt at the bottom of guide tube.	Dismantle fork legs and replace sealing washer bottom and reassemble.	
Hitting noise from front fork/s	Oil quantity is less in one/both fork legs.	Oil quantity mismatched between LH and RH fork assemblies.	Dismantle fork legs, drain oil and fill with correct recommended quantity.	Royal Enfield front fork oil 2W 25. Quantity 473 ml/ fork.
	Fork main springs have become soft/ coils are broken/ length is reduced.	Fork main springs have lost tension/Overall length of the main springs is reduced/coils are broken.	Dismantle fork legs and replace fork main springs.	Main spring length: 303 ± 3.0mm.
	Rebound spring has become soft/broken/ length is reduced.	Rebound springs have lost tension/overall length is reduced/coils are broken.	Dismantle fork legs and replace rebound springs.	
	Taper oil lock is not seated properly/is loose on piston tube.	Taper oil lock is seated unevenly/loose in piston tube/hex socket bolt at fork end bottom is loose.	Dismantle fork leg assemblies, check for uneven seating/loose fittings and replace taper oil lock/fork piston assembly.	
Fork action is soft	Oil quantity is less in one/both fork legs.	Oil quantity mismatched between LH and RH fork assemblies.	Dismantle fork legs, drain out oil and fill with correct recommended quantity.	Royal Enfield front fork oil 2W 25. Quantity 473 ml/ fork.
	Fork main springs are soft/coils are broken/ length is reduced.	Fork main springs have lost tension/overall length of main springs is reduced/coils are broken.	Dismantle fork legs and replace fork main springs.	Main spring length: 303 ± 3.0mm.

Symptom	Possible Cause	Diagnosis	How to Fix	Recommended Specification
Fork action is hard	Excessive oil is filled in fork assembly LH/RH.	Excessive oil is filled in the fork legs.	Dismantle fork legs, drain oil and fill with correct recommended quantity.	Royal Enfield front fork oil 2W 25. Quantity 473 ml/ fork.
	Fork main tube movement in fork ends is sticky.	Fork main tube is bent.	Dismantle fork legs, check main tube for straightness and replace main tubes.	
		Fork end tubes are damaged.	Dismantle fork legs, check fork ends inside for excessive wear-out.	
Riding is unstable	Tyre seating on rims is improper.	Tyre bead is uneven at the rim surface.	Remove tyre and reassemble correctly.	
	Wheel rims are out of trueness.	Wheel rims are bent/have excessive run-out.	Remove tyre and true the wheel rim correctly.	
	Wheel rims have a crack/heavy damage.	Wheel rims have been cracked/damaged due to impact.	Replace with Royal Enfield genuine wheel rims.	
	Spokes are broken.	One/several spokes are broken.	Replace spokes and correct wheel trueness.	
	Wheels have excessive axial/side play.	Wheel bearings are worn-out	Remove bearing and replace	
	Hubs front/rear are cracked/damaged	Wheel hubs are damaged due to impact.	Replace with Royal Enfield genuine hubs.	
	Oil quantity is mismatching in LH and RH fork legs.	Oil quantity mismatched between LH and RH fork assemblies.	Dismantle fork legs, drain oil and fill with correct recommended quantity.	Royal Enfield front fork oil 2W 25. Quantity 473 ml/ fork.
	Fork main springs have become soft/ coils are broken/ length is reduced.	Fork main springs have lost tension/Overall length of the main springs is reduced/coils are broken.	Dismantle fork legs and replace fork main springs.	Main spring length: 303 ± 3.0mm.
	Fork main tube movement in fork end is sticky.	Fork main tube is bent.	Dismantle fork legs, check main tube for straightness and replace main tubes.	
		Fork end tubes are damaged.	Dismantle fork legs, check fork ends inside for excessive wear-out and replace.	
	Steering stem movement is not smooth.	Control cables/wiring harness is not routed properly.	Route the control cables/ wiring harness correctly and strap to frame.	
		Steering stem nut is excessively tightened.	Adjust the steering stem nut correctly.	
		Steering stem bearings rollers have sticky movement/is rusted/bearing is damaged/uneven seating.	Dismantle steering stem and replace bearings.	
	Steering stem is bent.	Steering stem is bent.	Replace steering stem.	

Symptom	Possible Cause	Diagnosis	How to Fix	Recommended Specification
Vehicle is pulling to one side	Tyre pressures are less/more than recommended.	Front and rear tyre pressures are under/over inflated.	Ensure correct tyre pressures.	**Solo:** Front tyre: 32 psi/2.2 kg/cm^2. Rear tyre: 36 psi/2.53 kg/cm^2. **With Pillion:** Front tyre: 32 psi/2.2 kg/cm^2. Rear Tyre: 39 psi/2.74 kg/cm^2.
	Wheels alignment is not proper.	Front and rear wheels are not aligned.	Align front and rear wheels correctly.	
	Oil quantity is mismatching in LH and RH fork legs.	Oil quantity is mismatched between LH and RH fork assemblies.	Dismantle fork legs, drain out the oil and fill with correct recommended quantity.	Royal Enfield front fork oil 2W 25. Quantity 473 ml/ fork.
	Fork main springs have become soft/ coils are broken/ length is reduced.	Fork main springs have lost tension/Overall length of the main springs is reduced/coils are broken.	Dismantle fork legs and replace fork main springs.	Main spring length: 303 ± 3.0mm.
	Steering movement is hard.	Steering stem nut is excessively tightened.	Adjust steering stem nut correctly.	
		Steering stem bearings rollers have sticky movement/are rusted/ bearing is damaged/uneven seating.	Dismantle steering stem and replace bearings.	
	Vehicle met with an accident.	Fork main tube is bent.	Dismantle fork legs, check main tube for straightness and replace main tubes.	
		Fork end tubes are damaged.	Dismantle fork legs, check fork ends inside for excessive wear-out and replace.	
		Steering stem is bent.	Replace steering stem	
		Main frame is bent.	Check main frame for impact/bends and replace.	
2. Rear Shock Absorber/Swingarm Related				
Rear suspension is noisy	Rear shock absorbers bushes are worn-out/ damaged.	Shock absorbers have excessive radial/axial play on top/bottom mounting bolts due to bush damage.	Replace both shock absorbers as a set.	
	Rear shock absorbers are misaligned.	Top/bottom mounting locations of shock absorbers are misaligned.	Check top and bottom mounting points for any misalignment. Replace swingarm if it is bent.	
	Rear swingarm bushes are defective.	Rear swingarm bushes are rusted/jammed.	Replace swingarm bushes and axle.	

Symptom	Possible Cause	Diagnosis	How to Fix	Recommended Specification
Rear suspension is too soft	Shock absorber spring is preloaded at Min position.	Rear shock absorber spring preload is adjusted to soft position.	Adjust shock absorber spring preload evenly on both LH and RH side for the desired riding comfort and road conditions.	
	Shock absorbers are weak.	Rear shock absorbers have oil leakage/springs are very soft.	Replace both shock absorbers as a set.	
	Rear swingarm bushes are defective.	Rear swingarm bushes are worn-out.	Replace swingarm bushes and axle.	
Rear suspension is too hard	Shock absorbers spring is preloaded at Max position.	Rear shock absorbers spring preload is adjusted to maximum hard position.	Adjust shock absorber spring preload evenly on both LH and RH side for desired riding comfort and road conditions.	
	Shock absorbers are defective.	Rear shock absorbers compression is very hard.	Replace both shock absorbers as a set.	
	Rear swingarm bushes are defective.	Rear swingarm bushes are rusted/jammed .	Replace swingarm bushes and axle.	
Rear tyre worn-out on one side	Rear shock absorbers spring preload adjustment is mismatching between LH and RH shock absorbers.	Spring preload adjustments are not at same position on LH & RH sock absorbers.	Adjust shock absorber spring preload evenly on both LH and RH side for desired riding comfort and road conditions.	
	Rear wheel bearings are defective.	Rear wheel bearings are worn-out/have excessive side play.	Replace wheel bearings.	
	Rear swingarm is defective.	Rear swingarm is bent (LH & RH arms not at same level).	Replace swingarm assembly.	
Vehicle skids when rear brake is applied	Wheels alignment is not proper.	Front and rear wheels are not aligned.	Align front and rear wheels.	
	Rear wheel bearings are defective.	Rear wheel bearings are worn-out/have excessive side play.	Replace wheel bearings.	
	Rear shock absorbers spring preload adjustment is mismatching between LH and RH shock absorbers.	Spring preload adjustments are not at same position on LH & RH sock absorbers.	Adjust shock absorber spring preload evenly on both LH and RH side for desired riding comfort and road conditions.	
	Rear swingarm bushes are defective.	Rear swingarm bushes are worn-out.	Replace swingarm bushes and axle.	
	Rear swingarm is defective/rubbing on frame on one side.	Rear swingarm is bent (LH & RH arms are not at same level).	Replace swingarm assembly.	
Rear swingarm has excessive side play	Rear swingarm mounting to frame is loose.	Rear swingarm axle nut is loose.	Check and correct swingarm alignment to frame and tighten swingarm mountings.	
	Rear swingarm bushes are defective	Rear swingarm bushes are rusted/jammed.	Replace swingarm bushes and axle.	

Symptom	Possible Cause	Diagnosis	How to Fix	Recommended Specification
3. Tyres Related				
Rear tyre is worn-out on one side.	Improper wheel alignment.	Rear wheel is misaligned with respect to front wheel.	Check and correct wheel alignment.	
Tyre/s wearing out unevenly/ vehicle is unstable/ wobbling	Internal defect/poor quality tyre.	Tyres found to have bulges/ cracks in side wall. Threads are separated from the tyre.	Replace with Royal Enfield recommended tyres.	**Front tyre:** 100/90-18, Pirelli Phantom Sports Comp **Rear tyre:** 130/70-18, Pirelli Phantom Sports Comp
	Tyre seating on rims is improper.	Tyre bead is uneven at the rim surface.	Remove tyre and reassemble correctly.	
	Wheel rims have a defect.	Wheel rims are bent/have excessive run-out.	Remove tyre. Carry out proper wheel truing.	
	Rims have excessive side play.	Wheel bearings are worn-out/have excessive play.	Remove and replace wheel bearings.	
4. Wheel Rims Related				
Vehicle is unstable/ wobbling	Tyre seating on rims is improper.	Tyre bead is uneven at the rim surface.	Remove tyre and reassemble correctly.	
	Wheel rims are out of trueness.	Wheel rims are bent/have excessive run-out.	Remove tyre and true the wheel rim correctly.	
	Wheel rims have a crack/heavy damage.	Wheel rims are cracked/ damaged due to impact.	Replace with Royal Enfield genuine wheel rims.	
	Spokes are broken	One/several spokes are broken.	Replace spokes and correct wheel trueness.	
	Wheels have excessive axial/side play.	Wheel bearings are worn-out.	Remove bearing and replace.	
	Hubs front/rear are cracked/damaged.	Wheel hubs are damaged due to impact.	Replace with Royal Enfield genuine hubs.	

FUEL SYSTEM

CONTENTS PAGE

7. Fuel System.....523

7.1. Fuel System Components.....526

Dismantling.....526

7.1.1. Fuel Tank.....526

7.1.2. Fuel Pump Connector and Fuel Level Sensor.....526

7.1.3. Fuel Hose (Fuel Pump to Injector).....527

7.1.4. EVAP Connections to Fuel Tank.....527

7.1.5. Drain Hose.....527

7.1.6. Fuel Filter.....527

7.1.7. Fuel Pump.....528

7.1.8. Fuel Float.....529

Inspection.....530

7.1.9. Fuel Float.....530

7.1.10. Fuel Pump.....530

7.1.11. Fuel Filter.....530

Assembly.....530

7.1.12. Fuel Float.....530

7.1.13. Fuel Pump.....531

7.1.14. Fuel Filter.....532

7.1.15. Fuel Tank.....532

7.1.16. Drain Hose.....532

7.1.17. EVAP Connections to Fuel Tank.....533

7.1.18. Fuel Hose (Fuel Pump to Injector).....533

7.1.19. Fuel Pump Connector and Fuel Level Sensor.....533

7. Fuel System

General Description

The fuel leaves the tank through the fuel pump **(a)** and then passes through the fuel filter **(b)**. Next is a T - junction **(c)** which splits the fuel flow to the throttle body **(d)** and return hose to the fuel pump **(e)**. The return hose is for pressure regulation and fuel flows through return hose only if the pressure is above 3.5 bar.

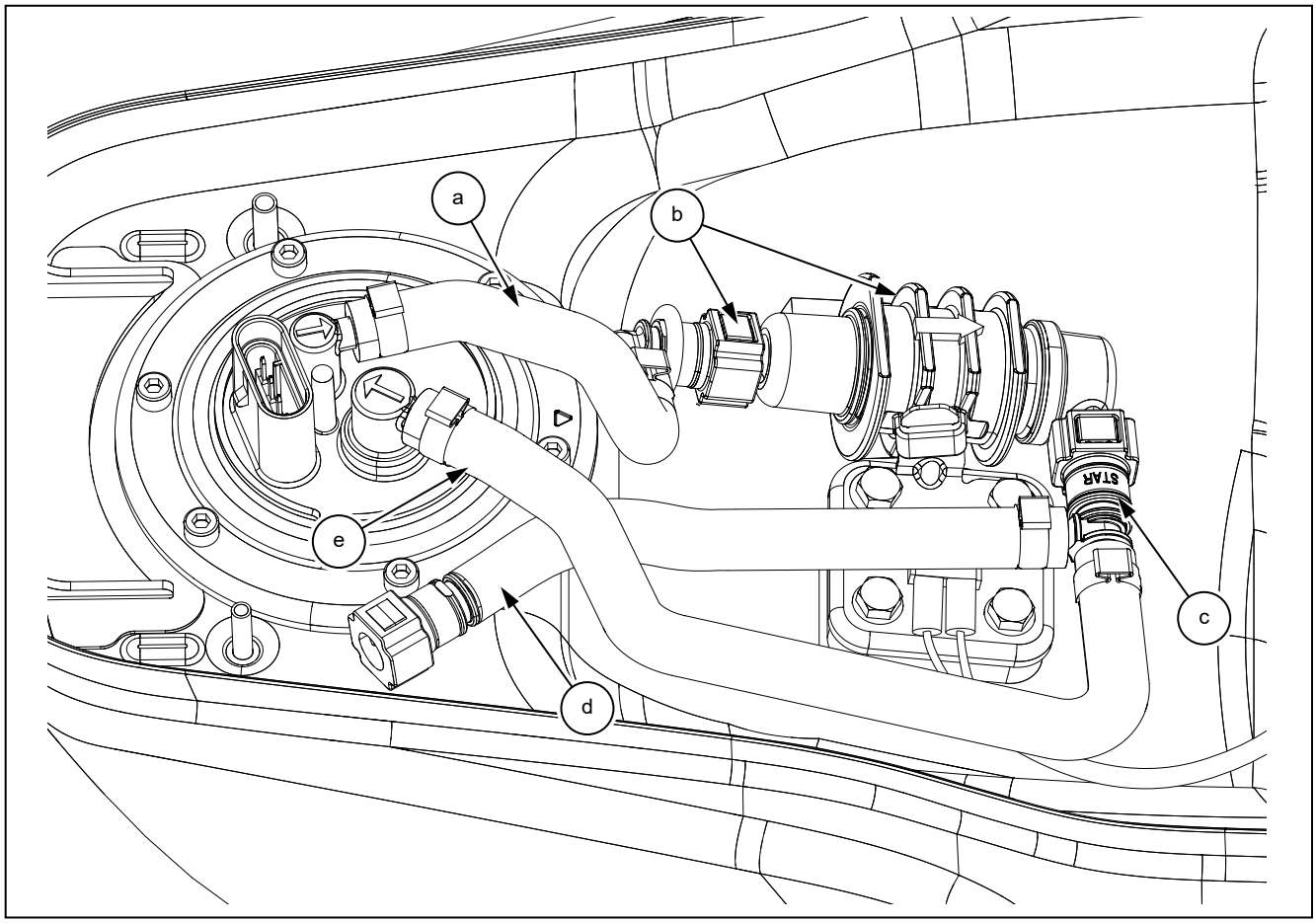

Fuel System Flowchart

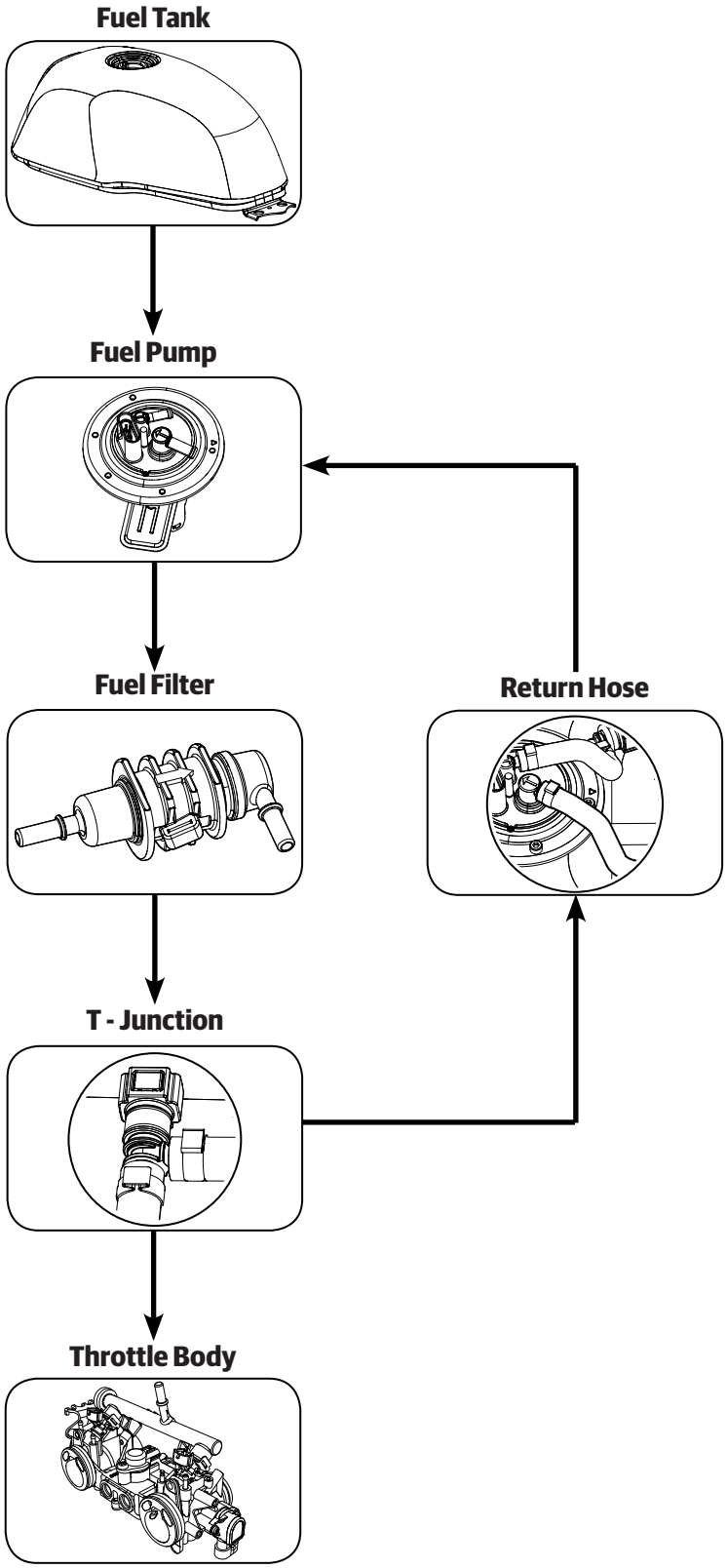

Fuel System

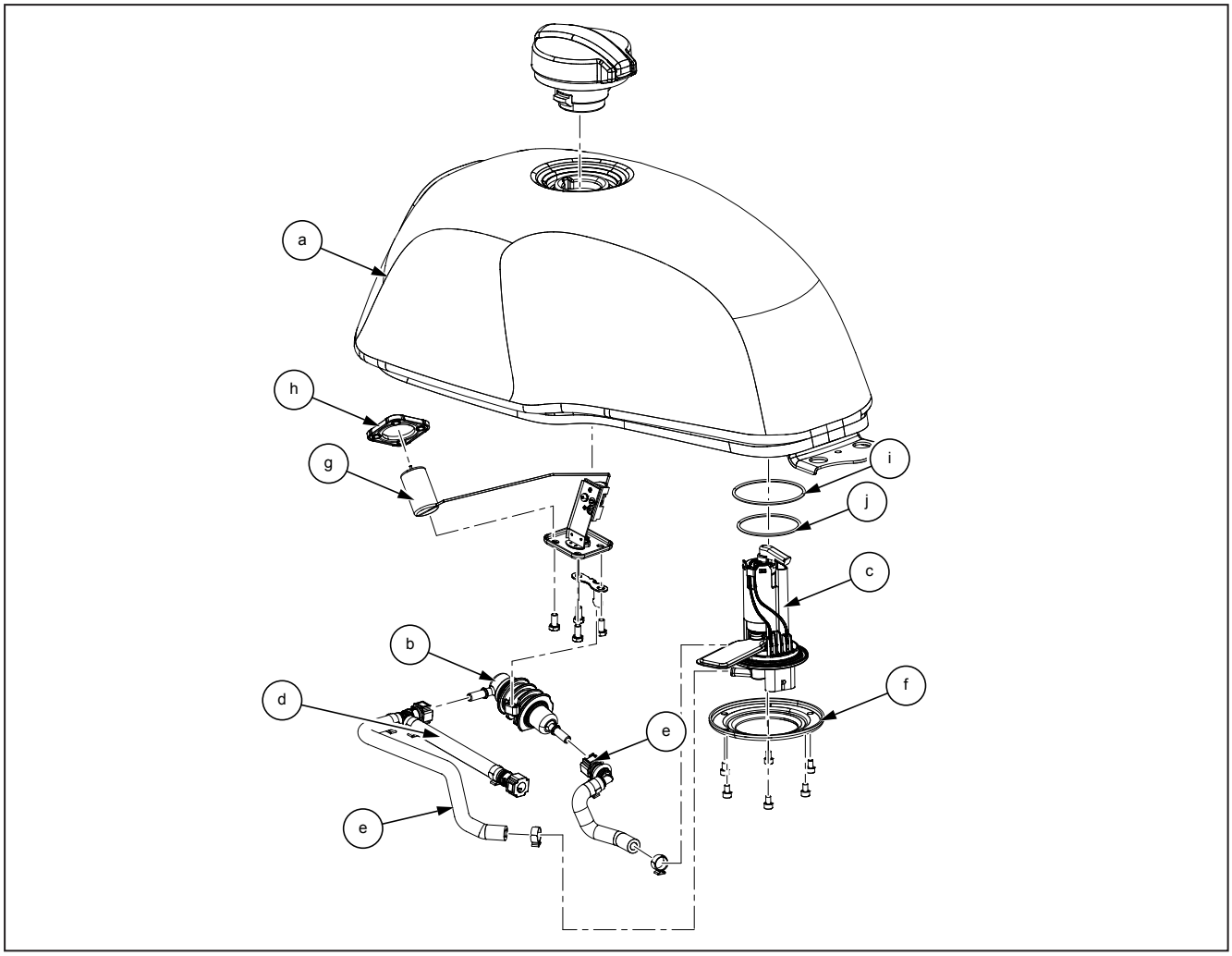

Item No.	Description	Quantity
a	Fuel Tank	1
b	Fuel Filter	1
c	Fuel Pump Module	1
d	Hose Fuel Feed	1
e	Hose Fuel Return	1
f	Plate Retaining Fuel Pump	1
g	Fuel Gauge Assembly	1
h	Fuel Gauge Assembly Gasket	1
i	O-Ring Fuel Pump Lower	1
j	O-Ring Fuel Pump Upper	1

7.1. Fuel System Components

⚠ WARNING

Gasoline is extremely flammable and highly explosive. Please handle with care. Improper handling can lead to fatal accident or serious injury. Always drain/fill fuel only in a well ventilated area.

Ensure there is no scope for flames or sparks near by while draining/filling fuel.

⚠ CAUTION

Make sure the fuel pressure is relieved before disconnecting the fuel connection.

⚠ CAUTION

Ensure the motorcycle is upright on a firm and flat surface.

Dismantling

7.1.1. Fuel Tank

- Ensure the ignition and stop switches are in OFF position.
- Remove the fuel tank cap. Drain fuel completely from fuel tank.
- Remove the following parts:
  - Remove side panel RH (section 6.7.1).
  - Remove rider seat (section 6.7.2).
- Loosen and remove 2 Nos. Hex head bolts **(M6) (a)** from rear end of fuel tank on frame **(b)**.

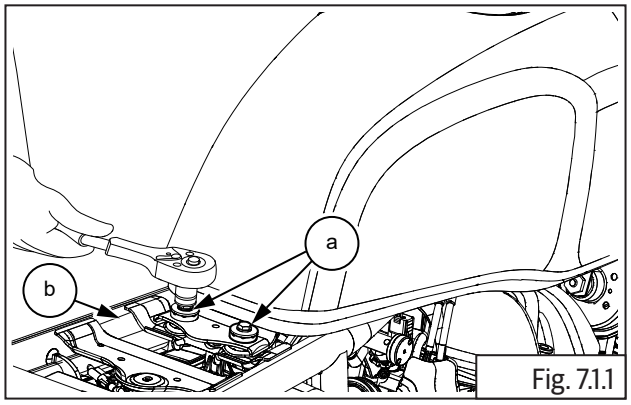

Fig. 7.1.1

	10 mm Socket with Ratchet

7.1.2. Fuel Pump Connector and Fuel Level Sensor

- Gently lift fuel tank **(a)** upwards and pull backwards slightly.
- Disconnect fuel pump connector **(b)** from fuel tank.

⚠ CAUTION

DO NOT lift the tank too much to prevent damage to connectors and brake hoses.

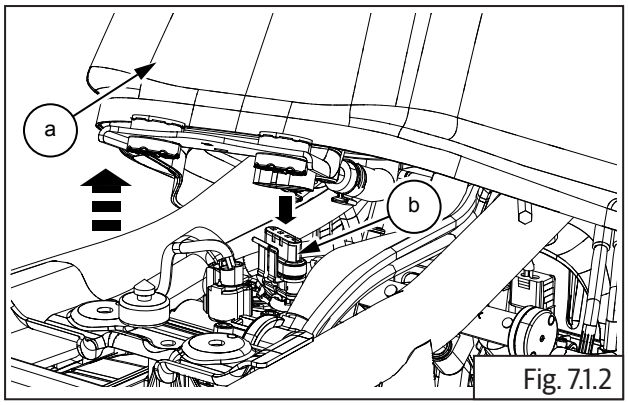

Fig. 7.1.2

- Disconnect fuel level sensor connector **(a)** from fuel tank **(b)**.

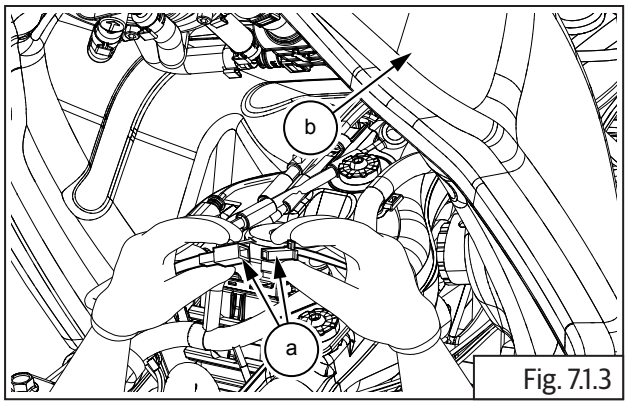

Fig. 7.1.3

7.1.3. Fuel Hose (Fuel Pump to Injector)

- Clean quick fix adapter area and disconnect by pressing lock button **(a)**. Remove fuel hose **(b)**.

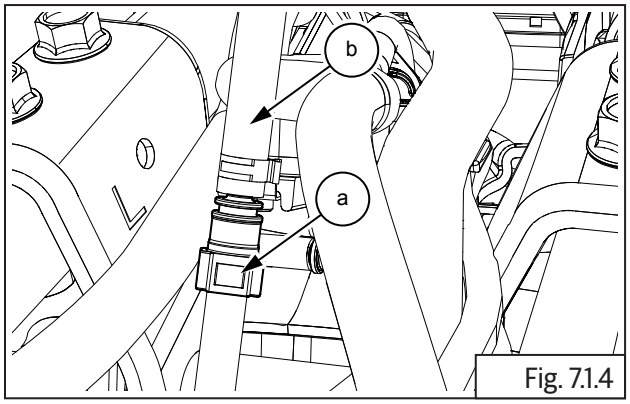

Fig. 7.1.4

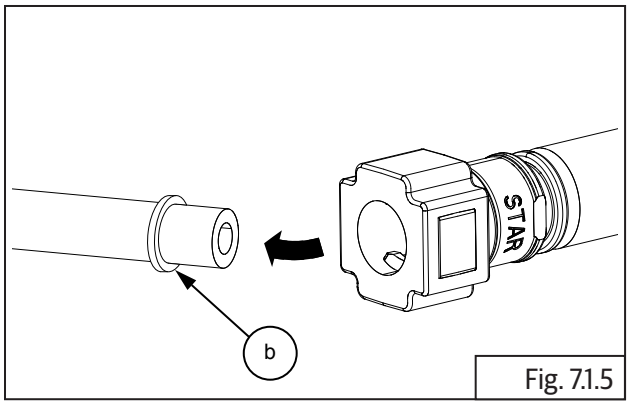

Fig. 7.1.5

7.1.4. EVAP Connections to Fuel Tank

- Disconnect EVAP connection hose **(a)** from fuel tank **(b)**.

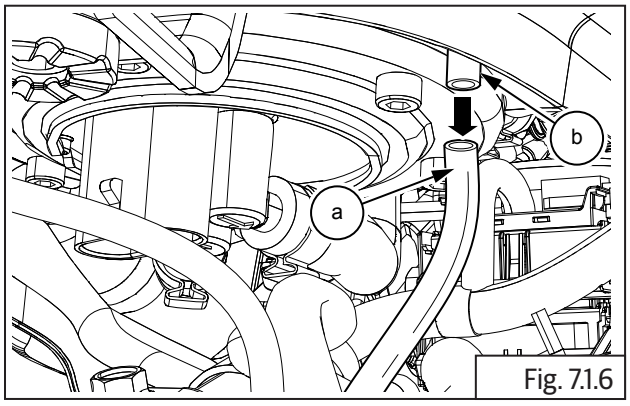

Fig. 7.1.6

7.1.5. Drain Hose

- Disconnect drain hose connection **(a)** from fuel tank **(b)**.

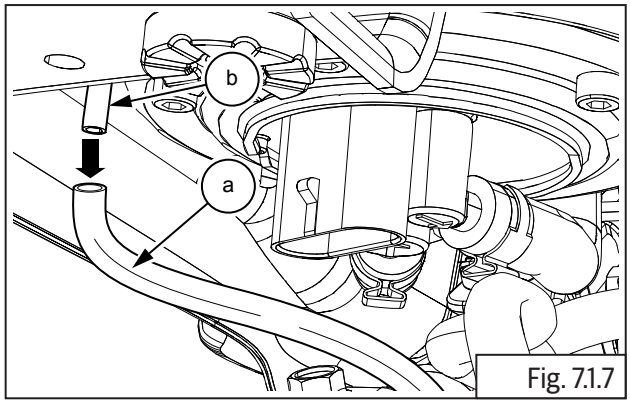

Fig. 7.1.7

- Gently remove fuel tank **(a)** from frame.

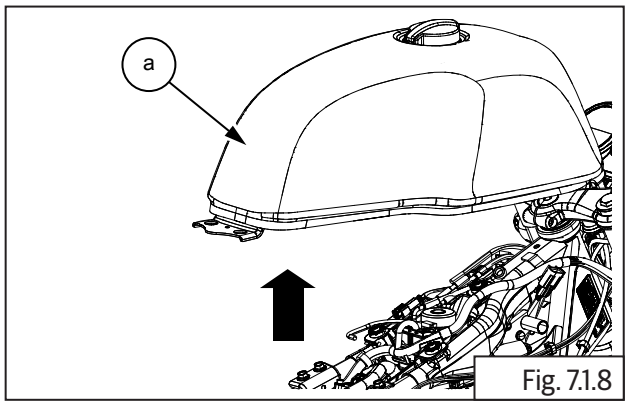

Fig. 7.1.8

7.1.6. Fuel Filter

- Invert fuel tank to access fuel pump and fuel float.
- Ensure the tank top/side surfaces DO NOT get damaged or scratched while removing fuel pump/ float. Provide adequate protection to fuel tank.

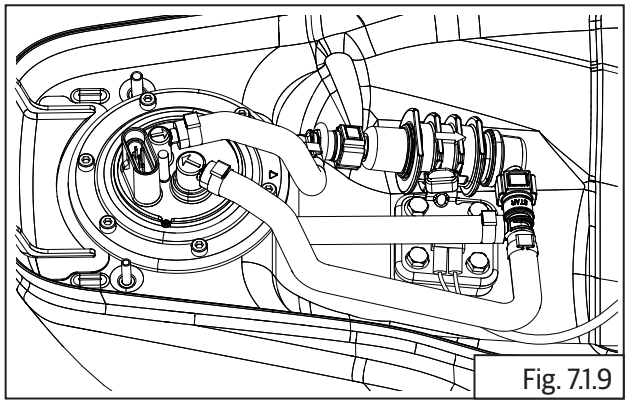
Fig. 7.1.9

- Press lock to release quick connector **(a)** from fuel filter outlet **(b)**.

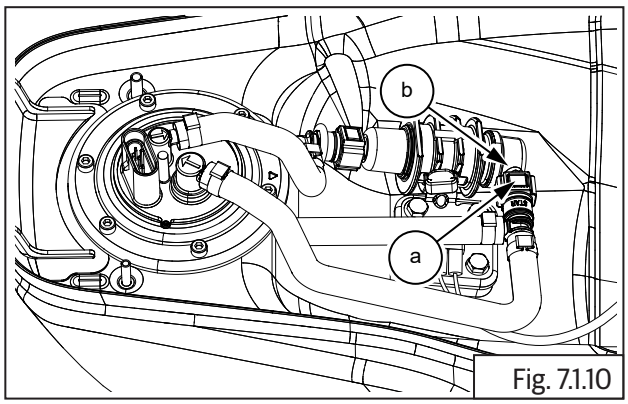

Fig. 7.1.10

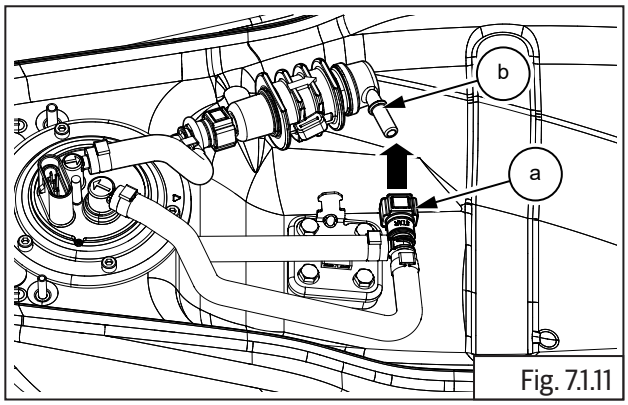

Fig. 7.1.11

- Press lock to release quick connector **(a)** from fuel filter inlet **(b)**.

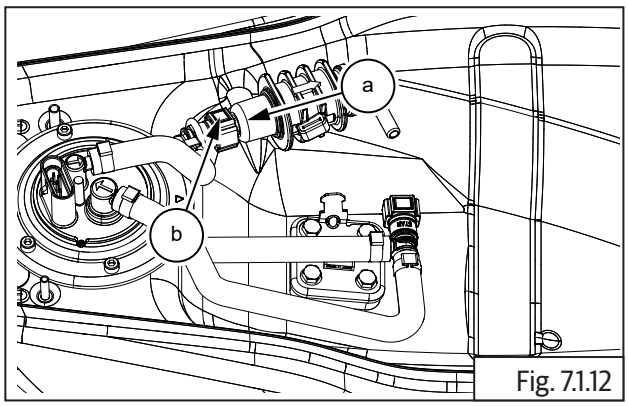

Fig. 7.1.12

- Remove fuel filter **(a)** from fuel pump inlet hose **(b)**.

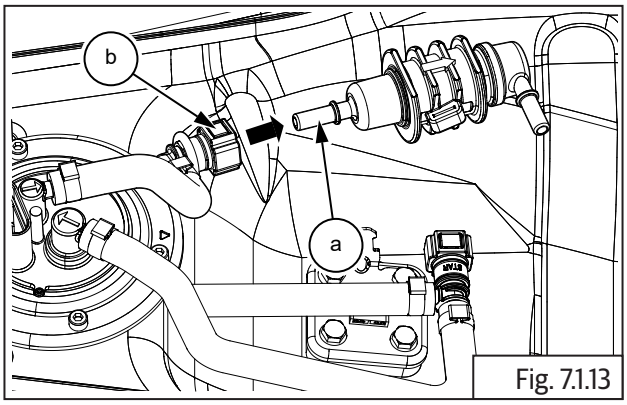

Fig. 7.1.13

7.1.7. Fuel Pump

- Loosen worm clips **(a)** on the hoses and remove hose from fuel pump.

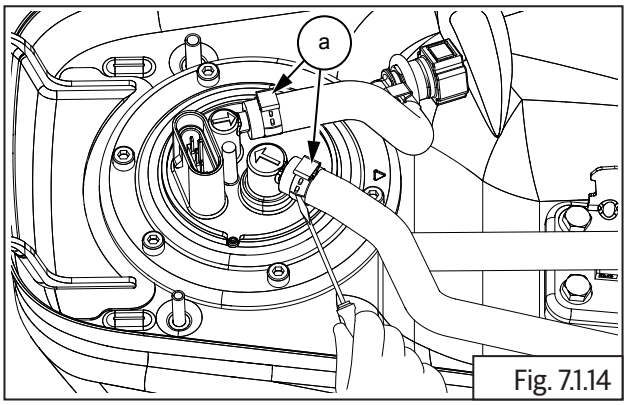

Fig. 7.1.14

- Loosen and remove 6 Nos. Hex socket head bolts **(M5) (a)** holding fuel pump **(b)** to tank **(c)**.

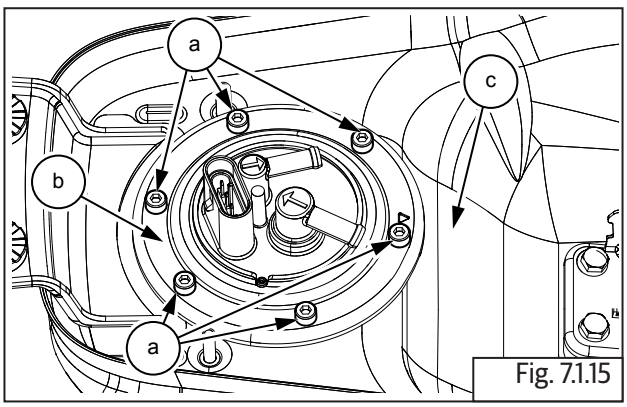

Fig. 7.1.15

	4 mm Socket with Ratchet
Torque	5 N·m/0.5 kgf-m

- Gently pull out the fuel pump **(a)** from fuel tank **(b)**.

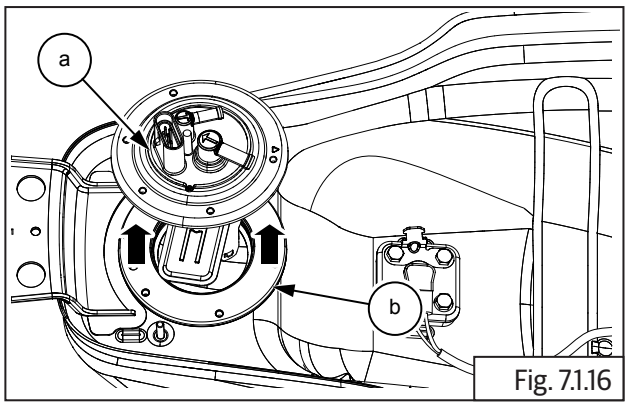

Fig. 7.1.16

- Remove O-rings **(a)** and **(b)** from fuel pump.

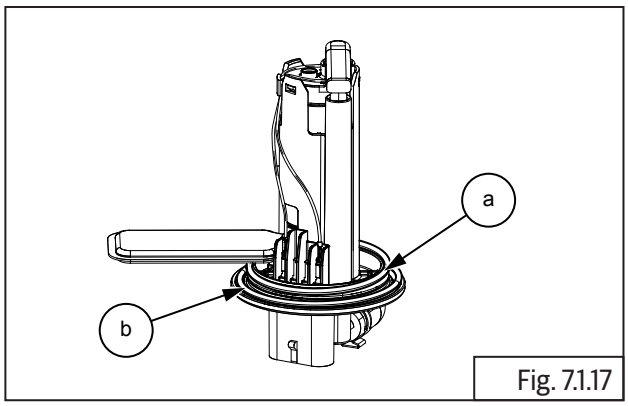

Fig. 7.1.17

7.1.8. Fuel Float

- Loosen and remove 4 Nos. Hex head flange bolts **(M6) (a)** to remove fuel float **(b)** from fuel tank **(c)**.

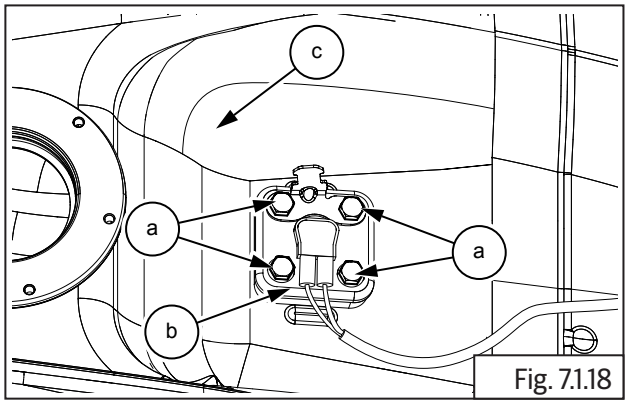

Fig. 7.1.18

	10 mm Socket with Ratchet

- Remove fuel filter bracket **(a)** from fuel float **(b)**.

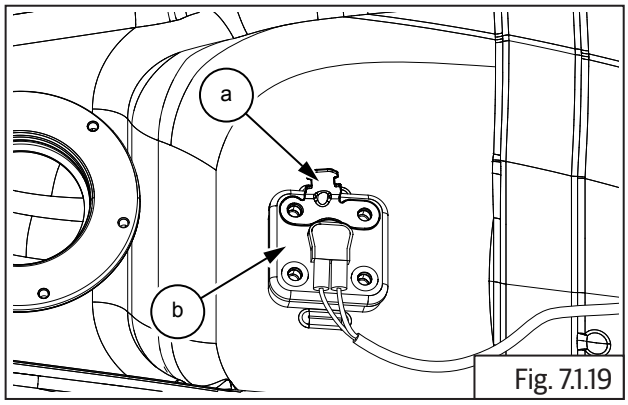

Fig. 7.1.19

- Gently lift **(1)** and rotate clockwise **(2)** to take out the complete float unit **(a)** from tank **(b)**.

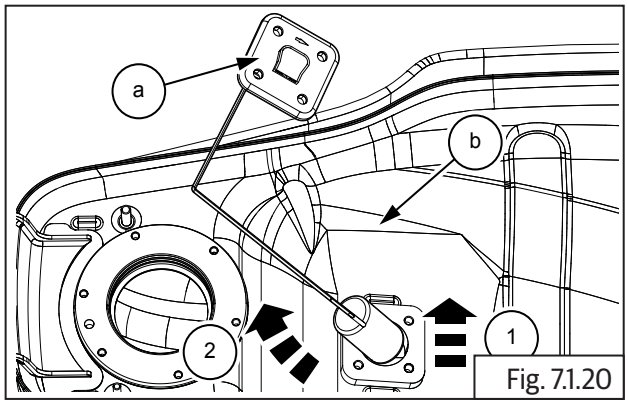

Fig. 7.1.20

⚠ CAUTION

Ensure the float unit does not gets damaged or bent while removing from fuel tank. Store fuel float unit carefully. Do not disturb the level of the float unit as it will seriously affect fuel level indication.

- Remove gasket **(a)** from float unit **(b)**.

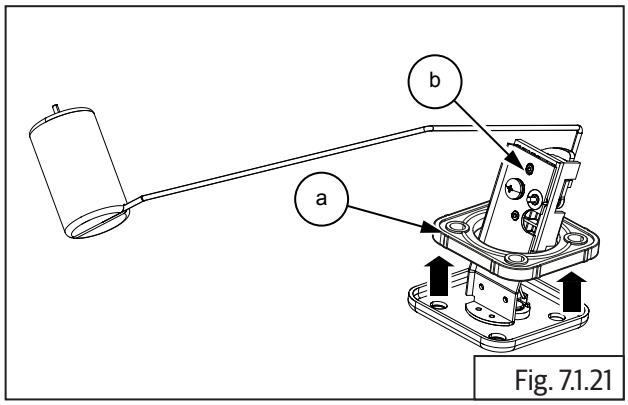

Fig. 7.1.21

Inspection

7.1.9. Fuel Float

- Check resistance at float unit pins at lower position.
- Check the resistance at float unit pins at higher position.
- Inspect float assembly for fuel ingress. Replace if fuel float assembly is punctured.

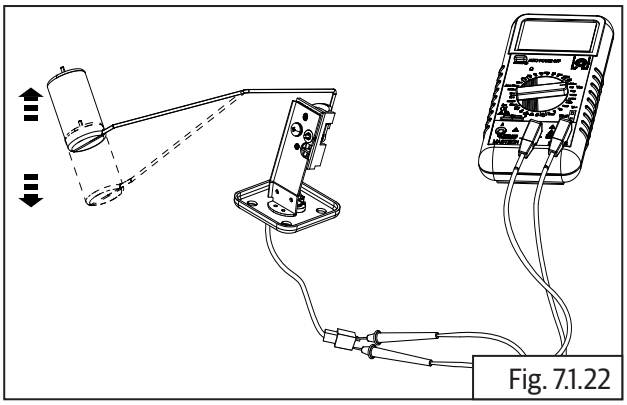

Fig. 7.1.22

7.1.10. Fuel Pump

- Check resistances at fuel pump **(a)** terminals **(b)**. Replace if resistances are out of specifications.

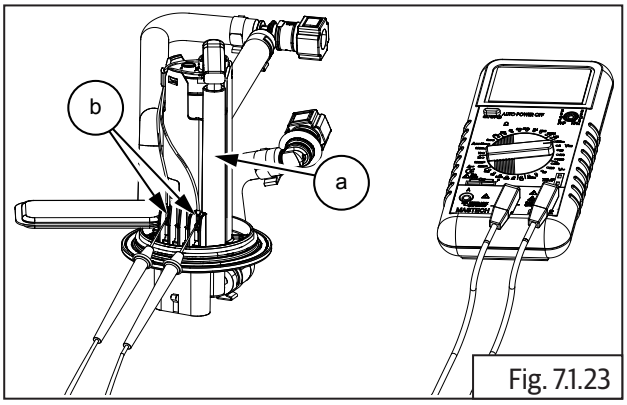

Fig. 7.1.23

- Replace fuel stainer **(a)** whenever it is removed / damaged.

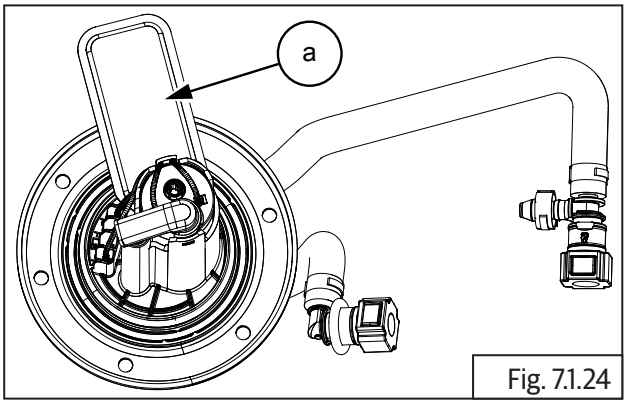

Fig. 7.1.24

7.1.11. Fuel Filter

- Replace fuel filter for every 20,000 Kms.

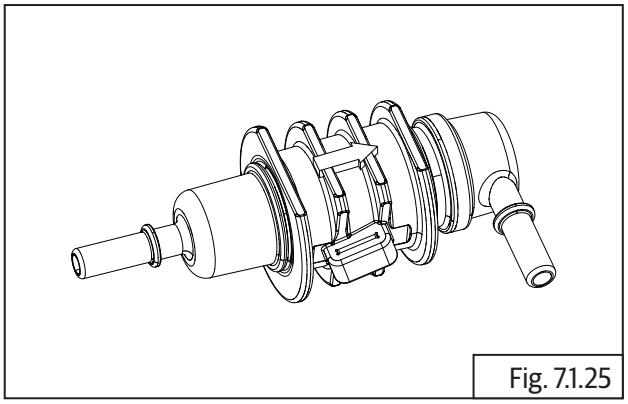

Fig. 7.1.25

- Replace following whenever fuel system is dismantled:
  - O-rings and gaskets
  - Rubber hoses
  - Fuel filters

Assembly

7.1.12. Fuel Float

- Locate gasket **(a)** into float unit **(b)**.

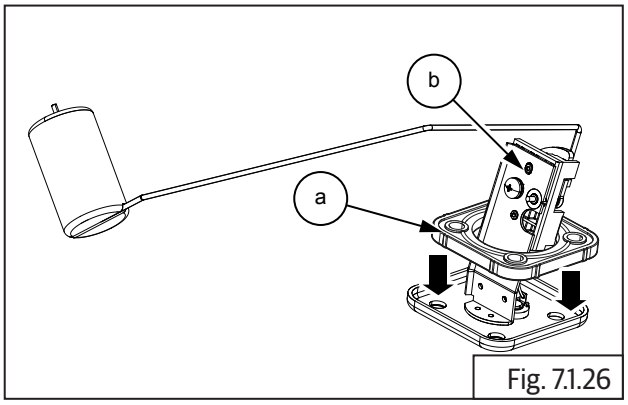

Fig. 7.1.26

- Insert fuel float unit **(a)** on fuel tank **(b)** with float facing towards front of fuel tank. Slightly Rotate anti-clockwise while inserting float in fuel tank.

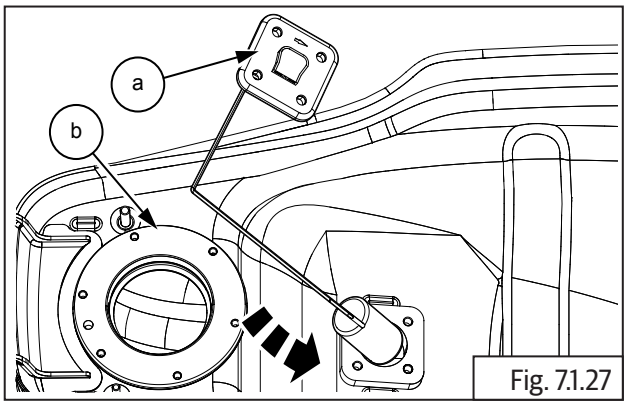

Fig. 7.1.27

- Assemble bracket **(a)** on fuel float unit **(b)**.

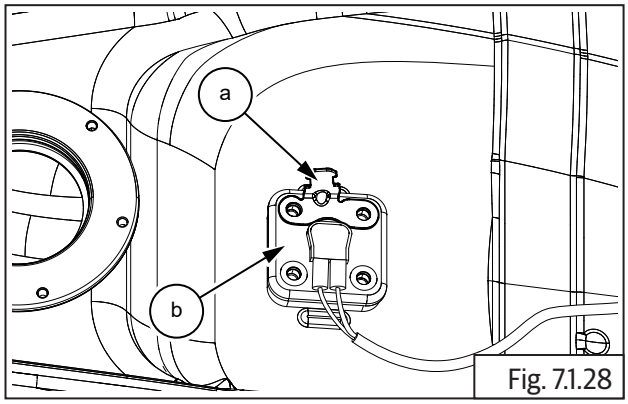

Fig. 7.1.28

- Locate and tighten 4 Nos. Hex head flanged bolts **(M6) (a)** on bracket to assemble fuel float unit **(b)** on fuel tank **(c)**.

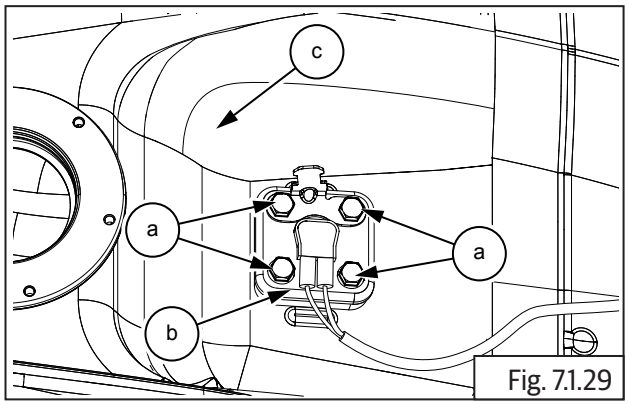

Fig. 7.1.29

	10 mm Socket with Ratchet

7.1.13. Fuel Pump

- Locate O-rings **(a)** and **(b)** on fuel pump. Ensure it is seated properly.

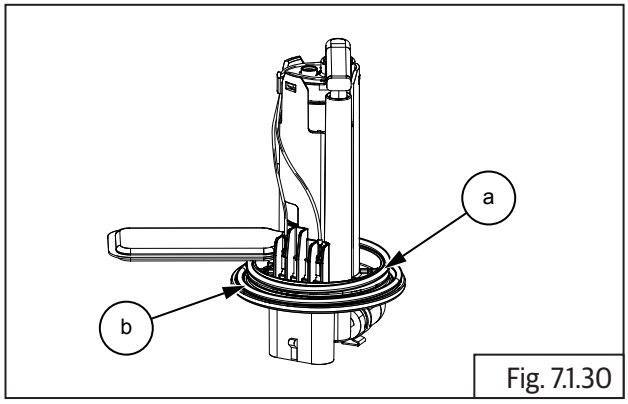

Fig. 7.1.30

- Assemble fuel pump **(a)** into tank **(b)** with outlet and return pipes facing towards front of the tank.

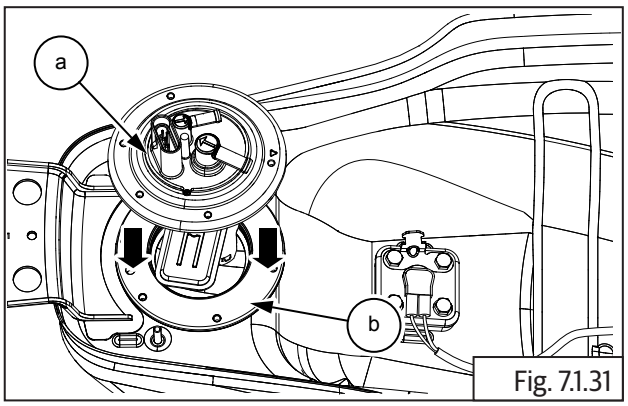

Fig. 7.1.31

- Locate and tighten 6 Nos. Hex socket head bolts **(M5) (a)** to assemble fuel pump **(b)** on fuel tank **(c)**.

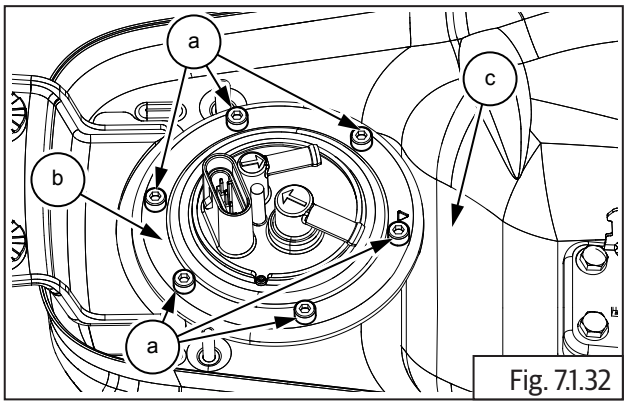

Fig. 7.1.32

	4 mm Socket with Ratchet

- Insert hoses **(a)** on fuel pump assembly **(b)**.

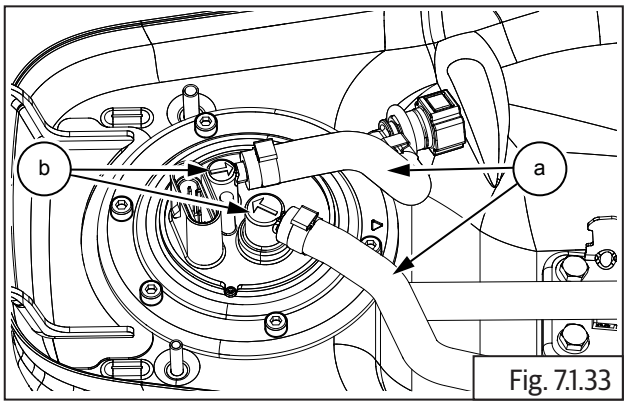

Fig. 7.1.33

- Tighten with clips **(a)**. Ensure the clips are locked properly on the hoses.

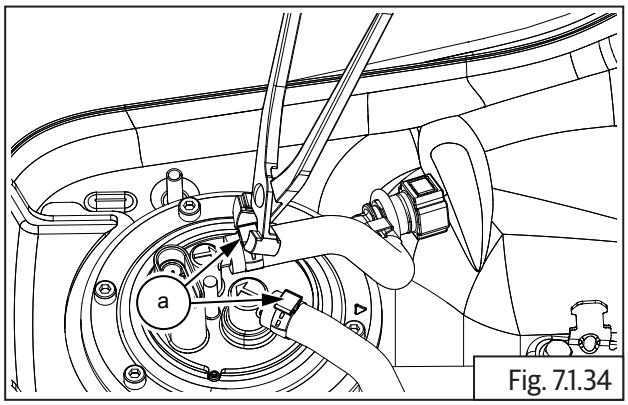

Fig. 7.1.34

7.1.14. Fuel Filter

- Assemble fuel filter **(a)** on fuel pump inlet hose **(b)**.
- Ensure arrow mark direction on fuel filter is facing towards inlet pipe.

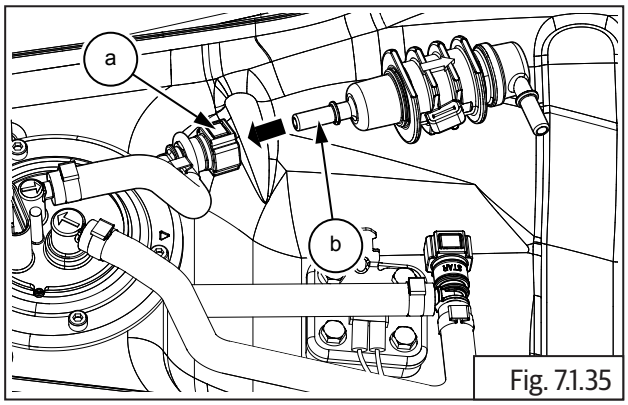

Fig. 7.1.35

- Insert filter quick fix connector **(a)** into the fuel filter inlet **(b)**. Ensure locks seated properly.

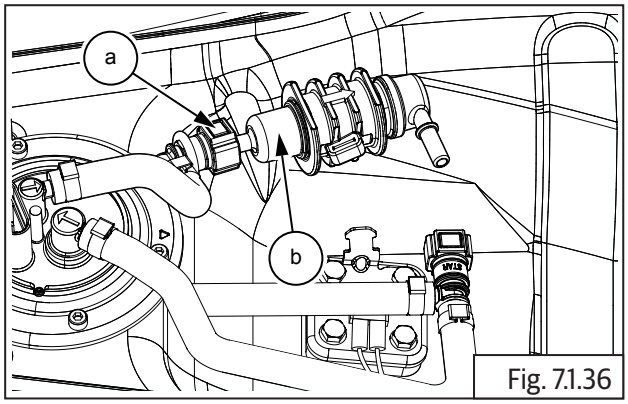

Fig. 7.1.36

- Insert filter outlet hose **(a)** in the quick connector **(b)** and ensure lock is seated properly.

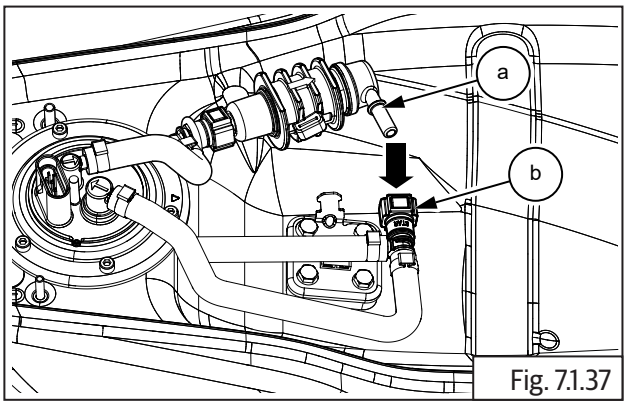

Fig. 7.1.37

7.1.15. Fuel Tank

- Hold and slide fuel tank **(a)** into frame guide **(b)** and ensure bush in fuel tank are aligned into guide in frame.

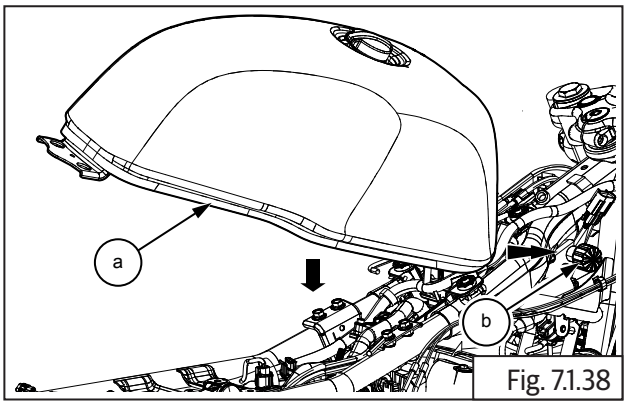

Fig. 7.1.38

7.1.16. Drain Hose

- Gently lift fuel tank and connect drain hose connection **(a)** to fuel tank **(b)**.

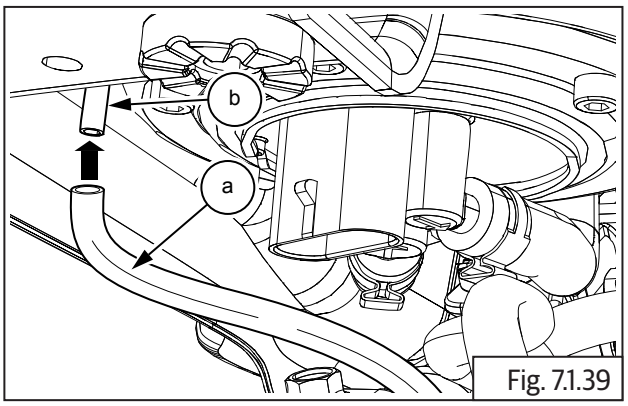

Fig. 7.1.39

7.1.17. EVAP Connections to Fuel Tank

- Connect EVAP connection hose **(a)** to fuel tank **(b)**.

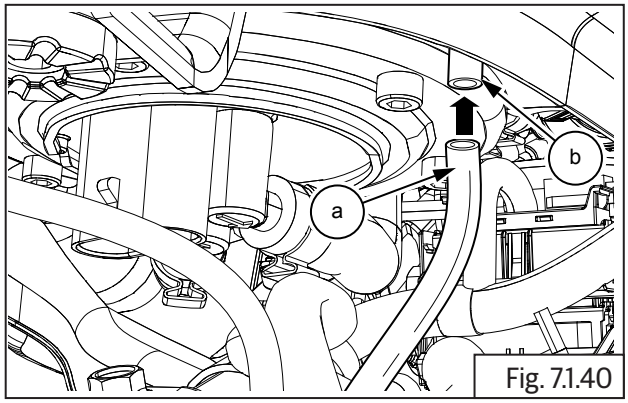

Fig. 7.1.40

7.1.18. Fuel Hose (Fuel Pump to Injector)

- Connect fuel hose **(a)** into quick fix connector **(b)** and ensure lock button is locked with a click sound.

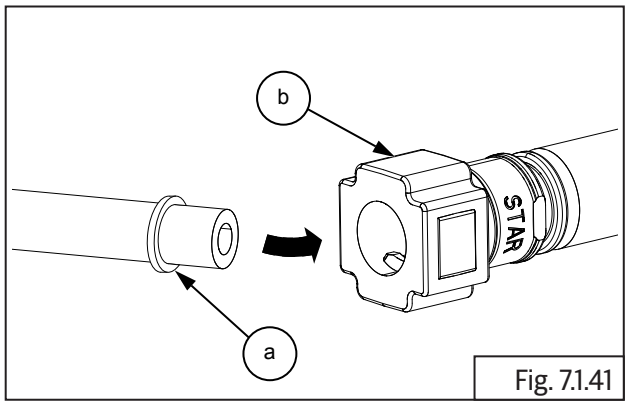

Fig. 7.1.41

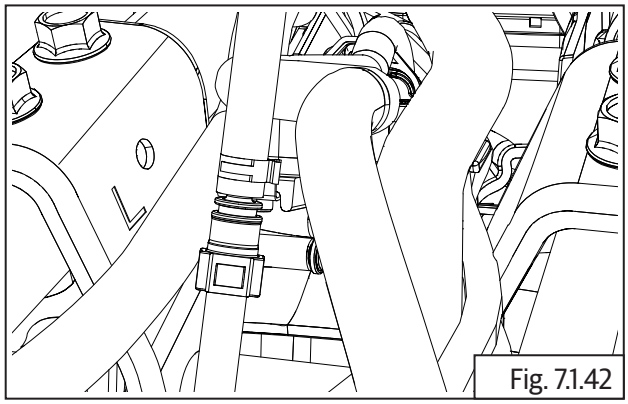
Fig. 7.1.42

- Connect fuel level sensor connector **(a)**.

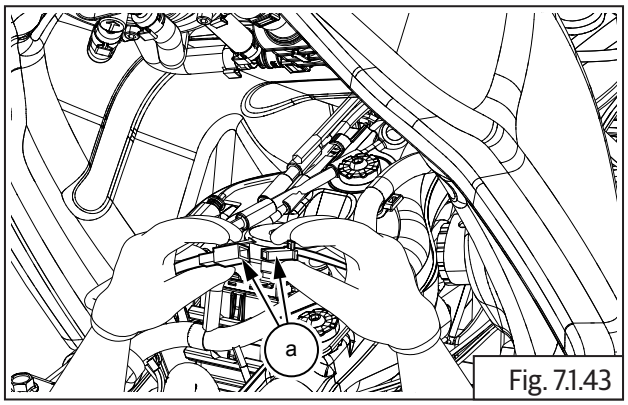

Fig. 7.1.43

7.1.19. Fuel Pump Connector and Fuel Level Sensor

- Connect fuel pump connector **(a)** into fuel pump **(b)**.

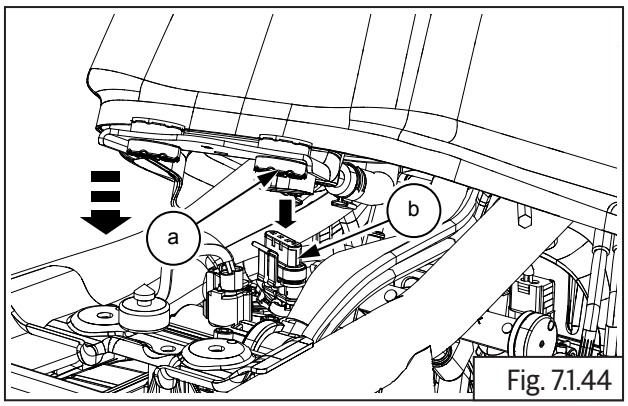

Fig. 7.1.44

- Gently lower the fuel tank into frame.
- Locate and tighten 2 Nos. Hex head bolts **(M6) (a)** on rear end of fuel tank **(b)**.

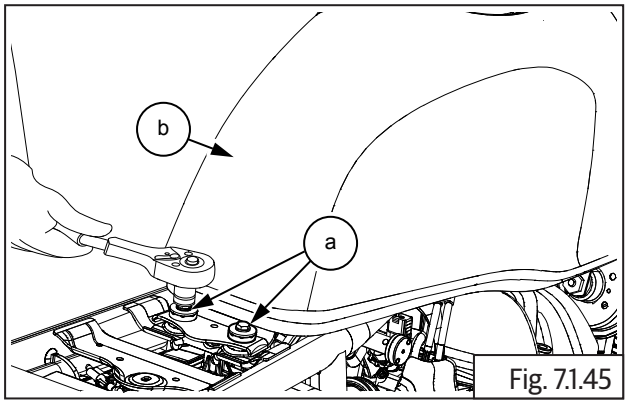

Fig. 7.1.45

	10 mm Socket with Ratchet
Torque	10 N-m/1.01 kgf-m

NOTE
• *Switch ON and OFF the ignition twice and visually check for any fuel leakage or wet on the tank and components, If anything found, inspect and rectify the issue.*

EVAPORATIVE (EVAP) EMISSION CONTROL SYSTEM

CONTENTS PAGE

8. Evaporative (EVAP) Emission Control System 537

General Description 537

EVAP Components 537

8.1. Evaporative (EVAP) Emission Control System 538

Dismantling 538

8.1.1. Charcoal Canister 538

8.1.2. EVAP Purge Valve 539

8.1.3. Hoses 540

Inspection 541

8.1.4. Charcoal Canister 541

8.1.5. Purge Valve 541

8.1.6. Hoses 541

8.1.7. Hose Connectors 541

8.1.8. EVAP System Leak Test Procedure 542

Assembly 542

8.1.9. Hoses 542

8.1.10. EVAP Purge Valve 543

8.1.11. Charcoal Canister 544

8. Evaporative (EVAP) Emission Control System

General Description

Royal Enfield twin cylinder motorcycles are equipped with Evaporative (EVAP) Emission Control System.

Whenever the motorcycle is parked after a ride or in hot summer, in high day time temperatures, fuel vapors with hydrocarbons tend to escape into the atmosphere through the vent hole of the fuel tank cap.

The evaporative emission control system traps these fuel vapors and purges it into a charcoal canister. When the engine is running, the vapors from the charcoal canister is routed through a purge valve into the combustion chamber. These vapors are also monitored by the engine management system (EMS) so as to ensure the exhaust emissions are within the specifications.

EVAP Components

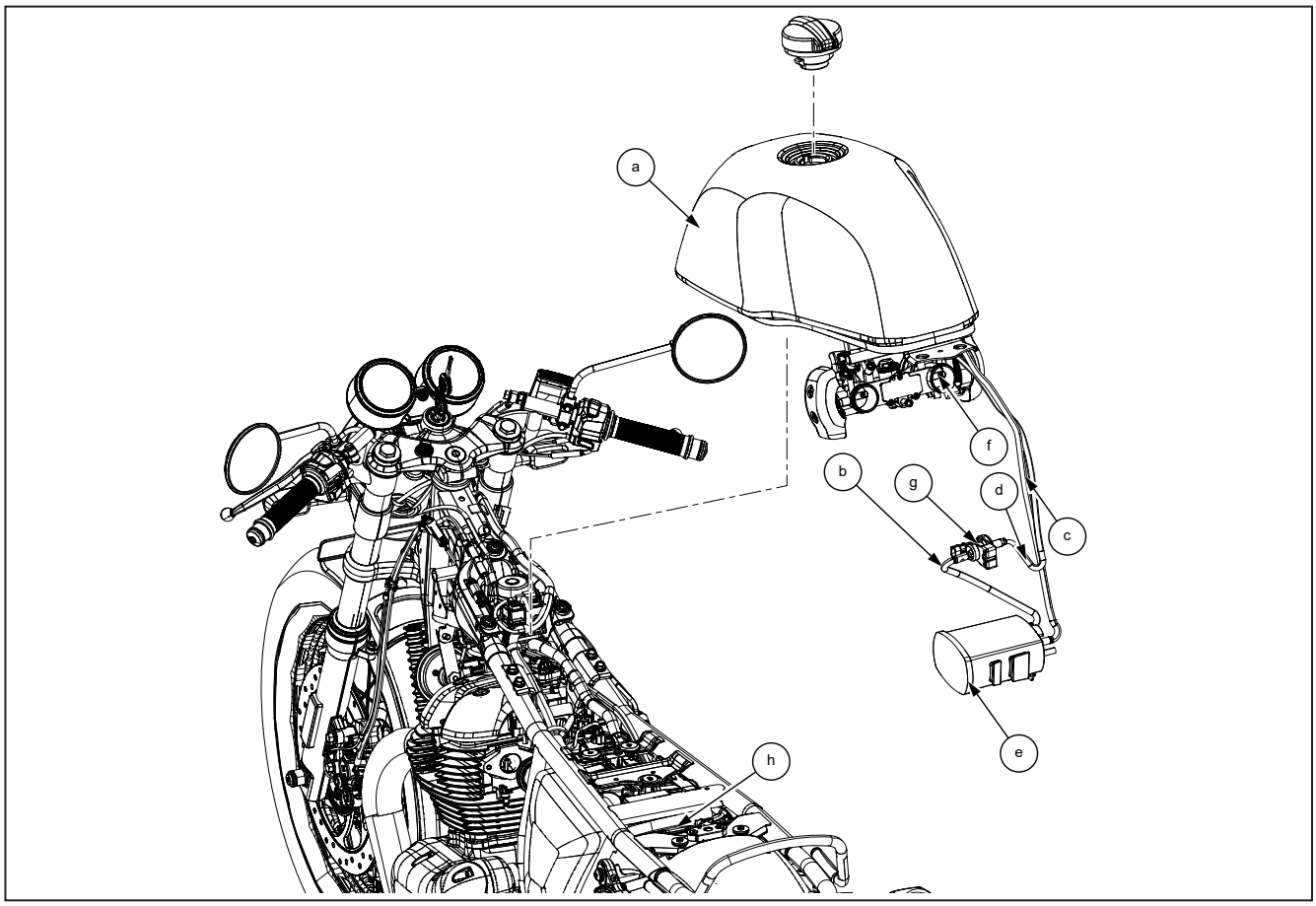

Item No.	Description	Quantity	Item No.	Description	Quantity
a	Fuel Tank	1	e	Charcoal Canister	1
b	Hose - Charcoal Canister to EVAP Purge Valve	1	f	Throttle Body	1
c	Hose - Tank to Canister	1	g	EVAP Purge Valve	1
d	Hose - Purge control Valve to Throttle Body	1	h	Engine Control Unit	1

⚠ WARNING

Before dismantling any part of the EVAP system, ensure the engine and exhaust systems are at ambient temperature. Evaporative fuel vapors are highly inflammable and explosive, which can result in serious injury and or fatal accidents.

⚠ WARNING

DO NOT damage or puncture any part of the EVAP system like canister, purge valve etc. DO NOT blow high compressed air into the canister or purge valve as it can result in an explosion.

⚠ CAUTION

Ensure the motorcycle is upright on a firm and flat surface.

- Ensure ignition key and engine stop switch are in OFF position.
- Disconnect battery negative (-) terminal (section 11.5.1).
- Before removing any part of the EVAP system, open fuel tank cap (section 7.1.4) to release the pressure inside.

8.1. Evaporative (EVAP) Emission Control System

Dismantling

8.1.1. Charcoal Canister

- The charcoal canister is located underneath the frame/above center stand mounting location.

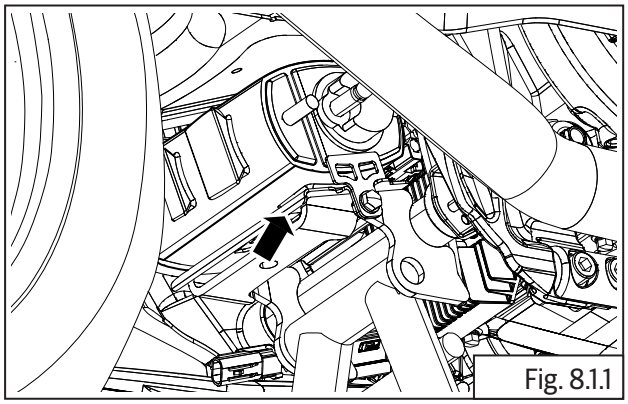

Fig. 8.1.1

- Loosen and remove Hex flange head bolt **(M6) (a)** from EVAP canister bracket **(b)**. EVAP canister bracket is located on RH side of motorcycle.

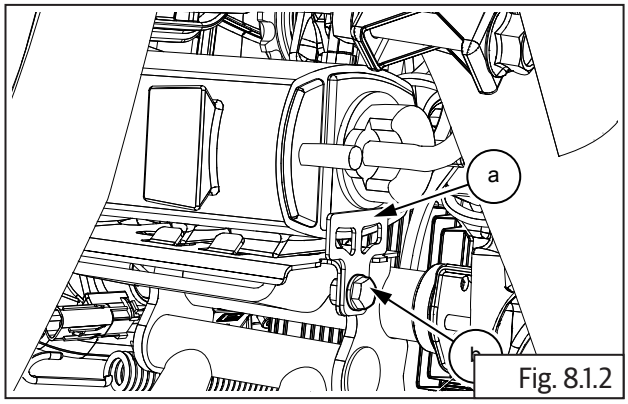

Fig. 8.1.2

	10 mm Ring spanner

- Remove the canister retainer bracket **(a)** from frame **(b)**.

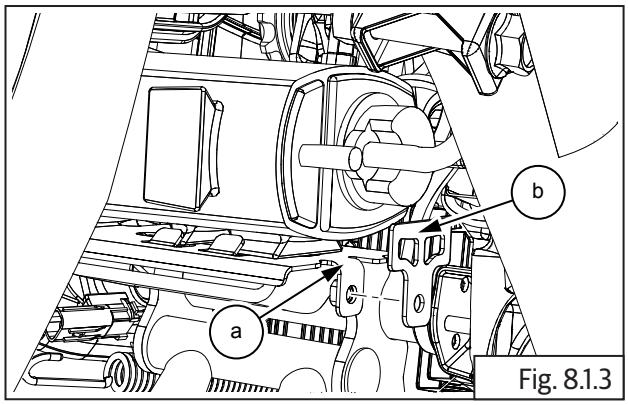

Fig. 8.1.3

- Gently pullout canister **(a)** to release from locks on frame bracket **(b)**.

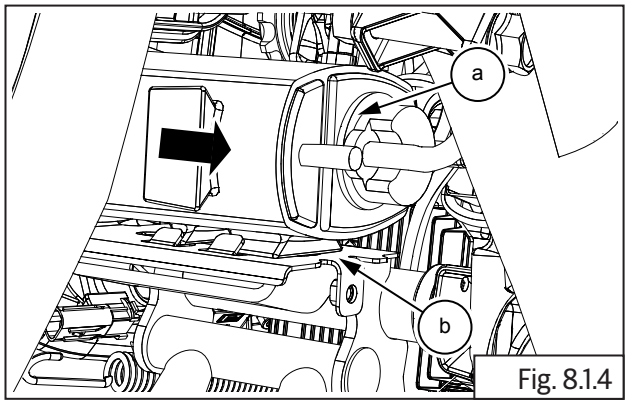

Fig. 8.1.4

⚠ CAUTION

Do not apply excessive force to pull out canister with hoses as it will damage the canister and the hose pipes.

- Disconnect inlet **(a)** and outlet **(b)** hoses from canister **(c)**.

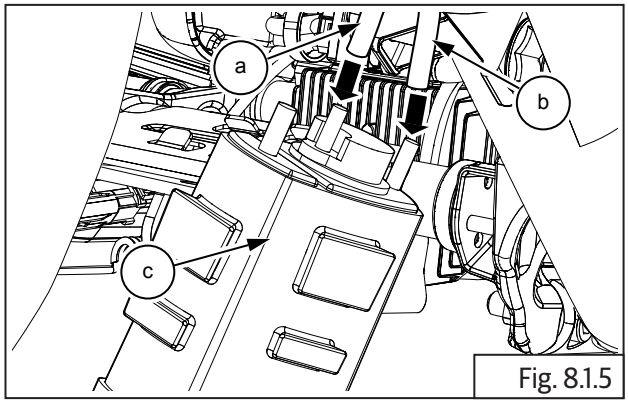

Fig. 8.1.5

- Remove canister and store carefully.

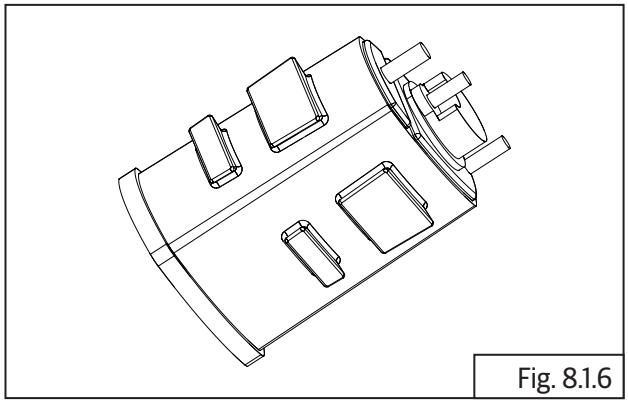
Fig. 8.1.6

8.1.2. EVAP Purge Valve

- Remove the following parts:
  - Side panel RH (section 6.7.1).
  - Rider seat (section 6.7.2).
  - Side panel LH (section 6.7.5).
  - Engine control unit (ECU) (section 10.1.1).
  - Rear mudguard (section 6.6.6).
  - Infill mudguard (section 6.6.7).
  - Disconnect the roll over sensor connector (section 10.1.12).

- Release purge valve **(a)** from the bracket in battery carrier **(b)** by pushing backwards.

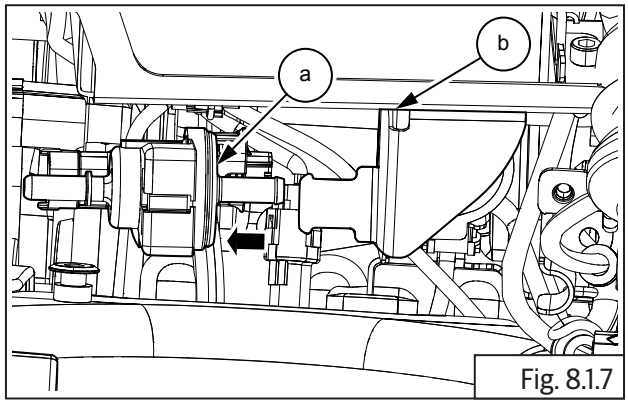

Fig. 8.1.7

- Disconnect hose **(a)** from canister **(b)** and purge valve **(c)**.

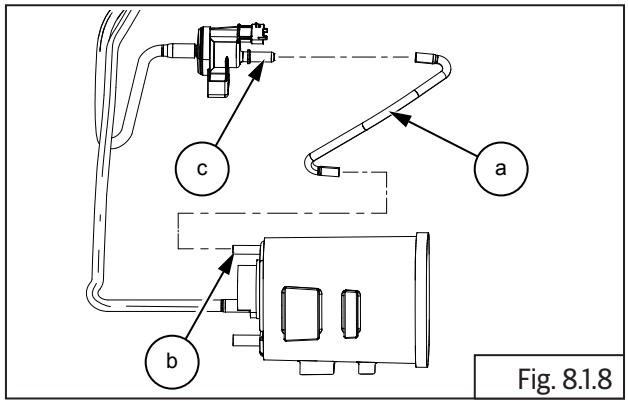

Fig. 8.1.8

- Disconnect hose **(a)** from throttle body and purge valve **(b)**.

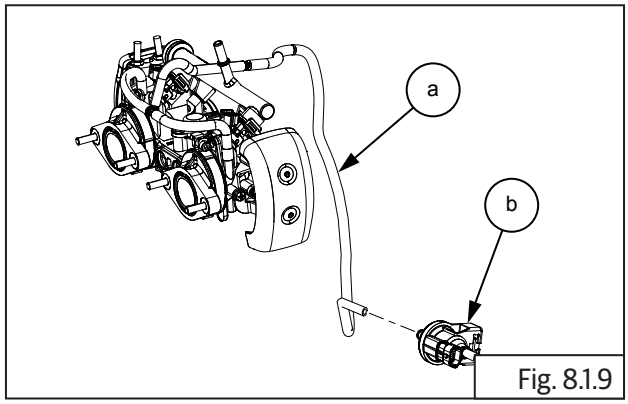

Fig. 8.1.9

- Disconnect electrical connector **(a)** from purge valve **(b)**.

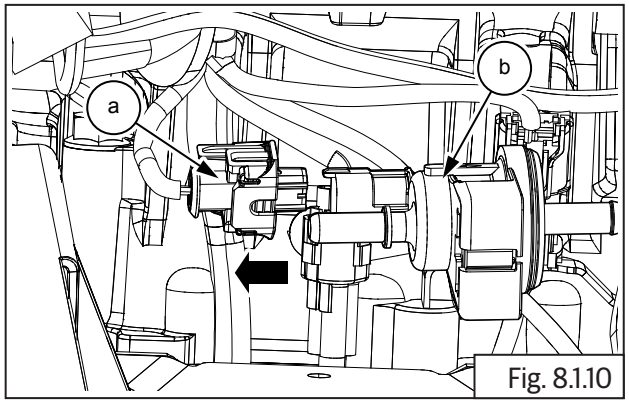

Fig. 8.1.10

- Remove purge valve and store carefully.

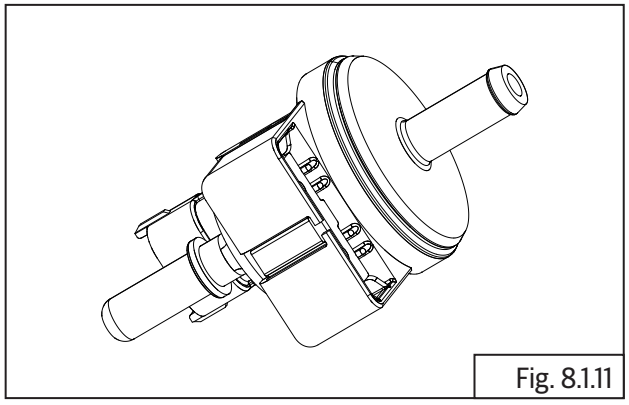
Fig. 8.1.11

8.1.3. Hoses

- Remove fuel tank and disconnect hoses (section 7.1.1).
- Loosen and remove 2 Nos. pan head screws **(a)** on air filter box assembly RH side and remove clamps **(b)** provided for routing of the brake hoses and wiring harness.

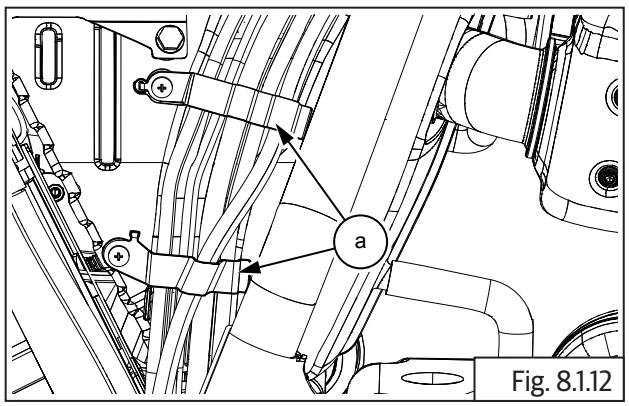

Fig. 8.1.12

- Disconnect hose from purge valve **(a)** to connector **(b)**.
- Disconnect hose **(c)** from connector to T-joint **(d)** near throttle body.

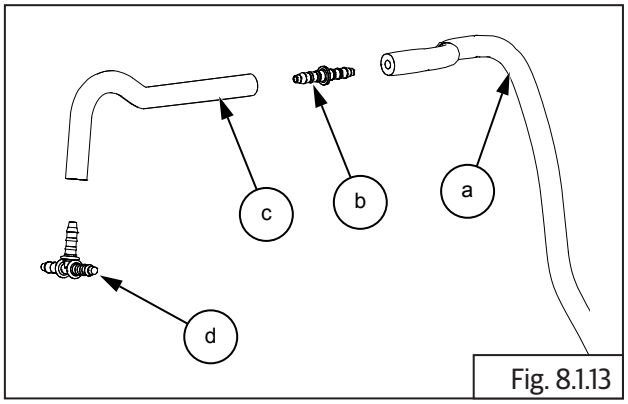

Fig. 8.1.13

- Disconnect 2 Nos. hoses from throttle body connecting to T-joint.

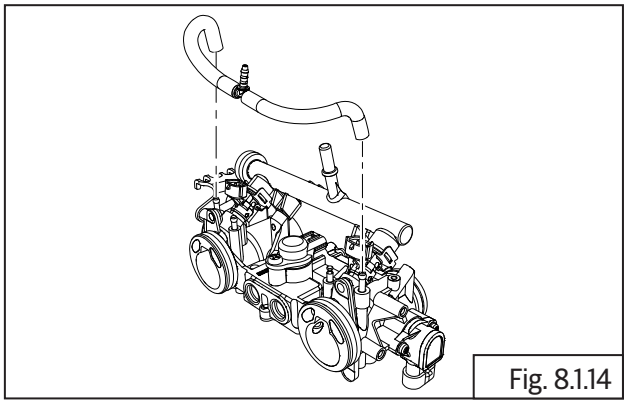
Fig. 8.1.14

NOTE

- *Separate the connector and T-joint from the hoses and store carefully.*

Inspection

8.1.4. Charcoal Canister

- Clean and inspect for any damage or crack on canister. Replace if necessary.
- Gently shake canister to feel if there is wet fuel inside. If suspected replace canister (weight 385± 5gms).
- Blow very low pressure air (5 psi) through the inlet port and check for the free flow of outlet side. If restricted or no air, replace the canister.

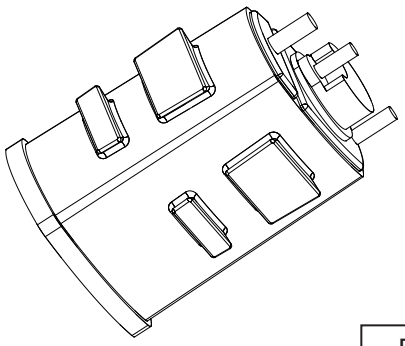

Fig. 8.1.15

8.1.5. Purge Valve

- Clean and visually inspect the EVAP purge valve for any damage or crack.
- Check purge valve in EMS section, replace if found defective.
- Blow low pressure air (5 psi) through hose connecting to throttle body and check for pressure release through hose connecting to canister. If air releases, purge valve is defective and replace.

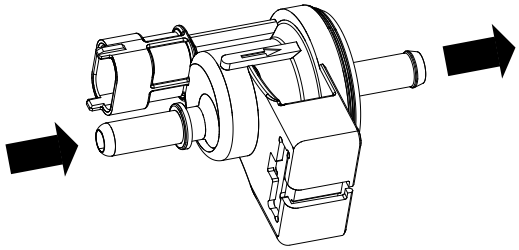

Fig. 8.1.16

8.1.6. Hoses

- Check hose for any crack, pinch, wear out or hardening. Replace if defective.
- Replace hoses as mentioned in periodic maintenance schedule.

8.1.7. Hose Connectors

- Check for any damages or cracks and replace if defective.

Do's & Don'ts

- Do not fill fuel tank above anti-splash plate inside fuel tank as it will cause fuel to get into EVAP system.

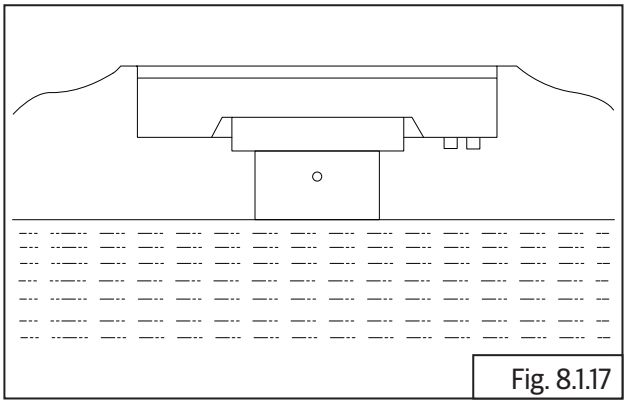

Fig. 8.1.17

- Do not use motorcycle if any part of EVAP system is damaged.
- Do check the EVAP system periodically for damages and leakages.

8.1.8. EVAP System Leak Test Procedure

- Ensure the systems hoses are connected correctly.
- Block the EVAP atmosphere breather.
- Block the LH side throttle body Hose, Purge.
- Connect a hose to the fuel tank to EVAP hose to allow a pressure to be applied.
- Connect another hose to the RH side throttle body Hose, Purge.
- Pressurise the system through both the Evap Canister atmosphere breather and the RH side throttle body Hose, Purge at the same time as below:
  1. Fill at 20kPa for 20 Seconds.
  2. Stabilize, 50 Seconds.
  3. Drop less than 300 Pa over 5 minutes.

Assembly

8.1.9. Hoses

- Position upper clamp **(a)** correctly against air filter box assembly on RH, duly ensuring mounting holes are aligned. Ensure the brake hoses and EVAP hose are correctly located inside clamp.
- Locate screw **(b)** on mounting hole of clamp and tighten clamp to air filter housing.

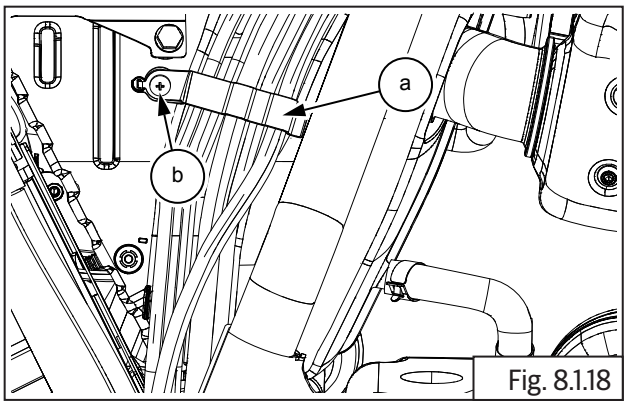

Fig. 8.1.18

	Screw driver (+)

- Position lower clamp **(a)** correctly against air filter box assembly on RH side, duly ensuring mounting holes are aligned. Ensure brake hoses and wiring harness are correctly located inside clamp.
- Locate screw **(b)** on mounting hole of clamp and tighten clamp to air filter housing.

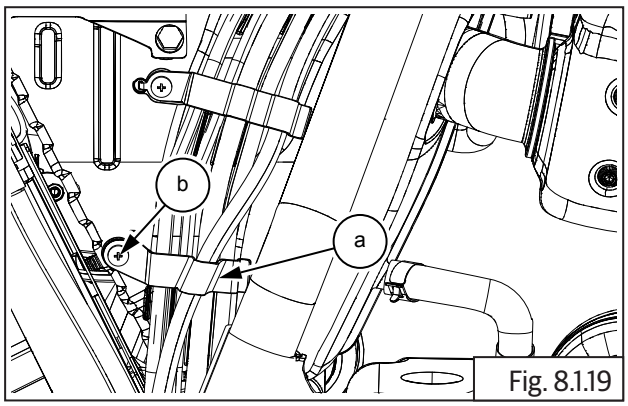

Fig. 8.1.19

	Screw driver (+)

NOTE
• *Please ensure the EVAP hoses are routed properly and ensure they DO NOT get pinched or damaged.*

- Locate connector **(b)** on the hose **(a)** going to purge valve.
- Connect small hose **(c)** to connector **(b)**.
- Connect T-joint **(d)** to small hose **(c)**.

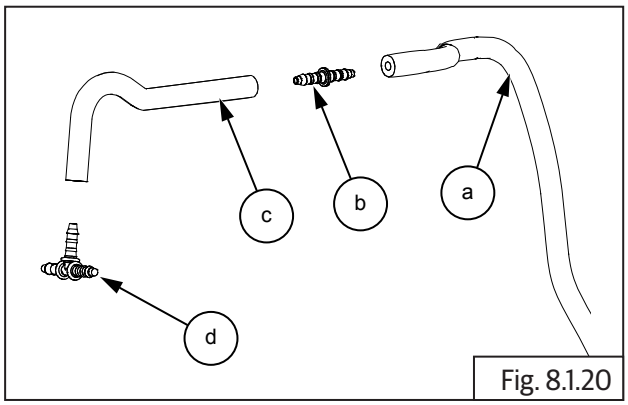

Fig. 8.1.20

- Connect 2 Nos. hoses on either end of T-joint to throttle body and connect the other end of the hoses to the throttle body LH and RH.

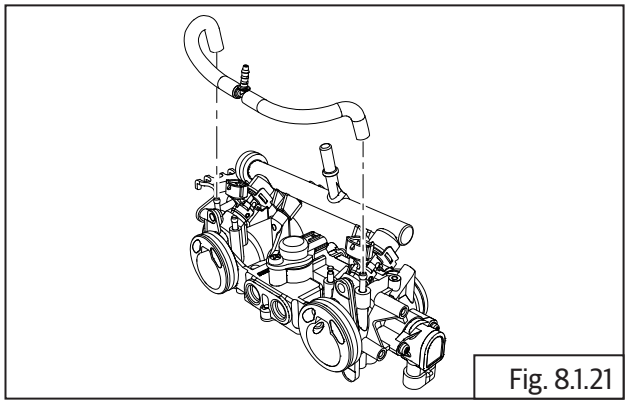

Fig. 8.1.21

8.1.10. EVAP Purge Valve

- Connect throttle body hose **(a)** to outlet near wiring coupler in purge valve.
- Connect small hose **(b)** to inlet of purge valve from canister.

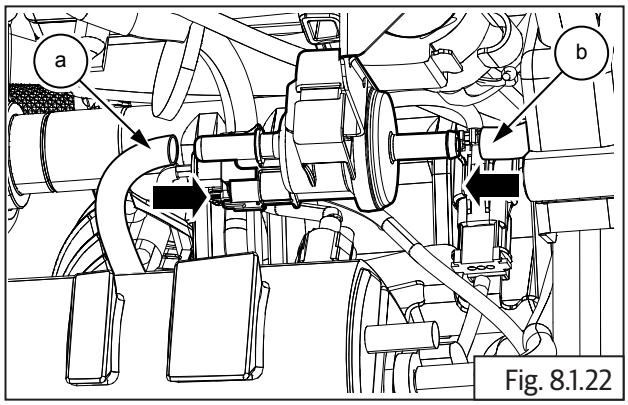

Fig. 8.1.22

- Connect the electrical connector **(a)** to purge valve.

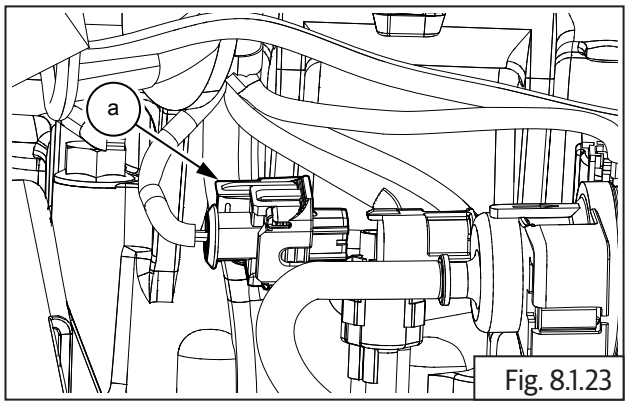

Fig. 8.1.23

- Position battery carrier bracket in the frame and locate purge valve on battery carrier bracket bottom.
- Ensure purge valve is located properly on battery carrier bracket.

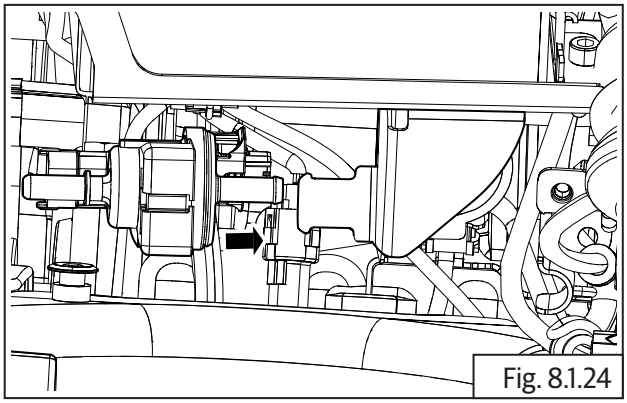

Fig. 8.1.24

- Assembly the following parts:
  - Connect roll over sensor connector (section 10.1.32).
  - Infill mudguard (section 6.6.10).
  - Rear mudguard (section 6.6.11).
  - Engine control unit (ECU) (section 10.1.20).
  - Side panel LH (section 6.7.5).
  - Rider seat (section 6.7.7).
  - Side panel RH (section 6.7.8).

8.1.11. Charcoal Canister

- Connect hose **(a)** from fuel tank to center pipe marked "tank" in canister.
- Connect hose from purge valve **(b)** to outer pipe marked "purge" in canister **(c)**.
- Ensure hoses are seated properly.

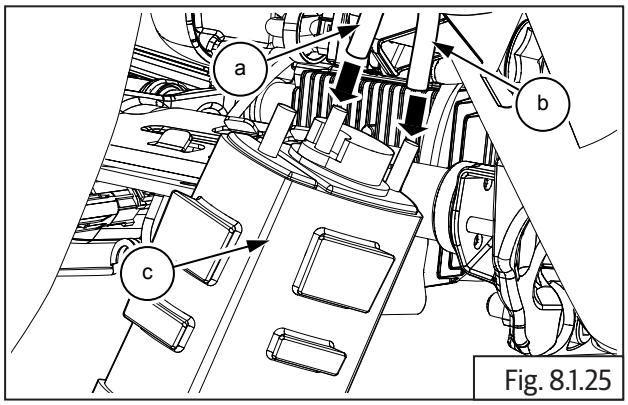

Fig. 8.1.25

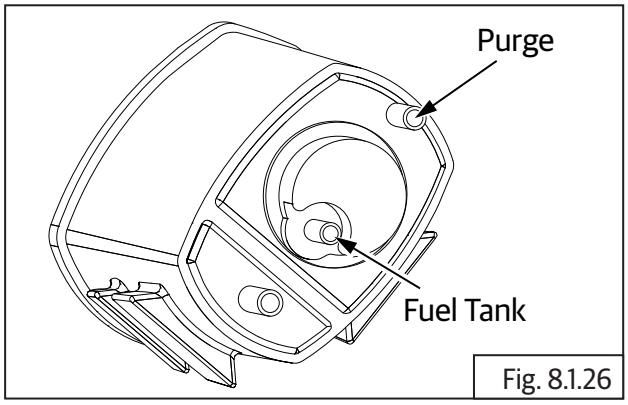

Fig. 8.1.26

NOTE
• *Do not connect anything to the third pipe in the canister. It is a dummy pipe.*

- Locate canister **(a)** on bracket **(b)** in frame. Push it completely to lock in place.

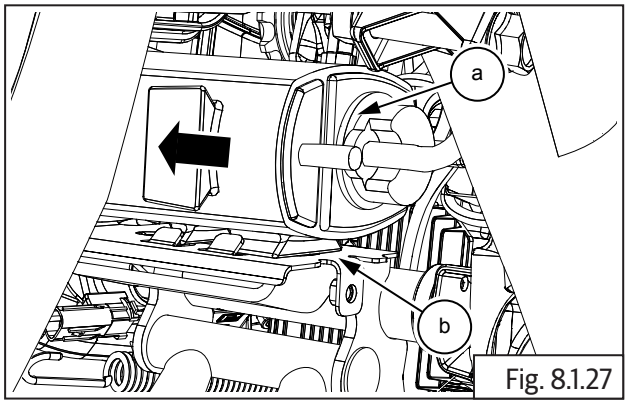

Fig. 8.1.27

- Locate retainer bracket **(a)** on canister, align mounting hole to frame and tighten with Hex flange bolt **(M6) (b)**.

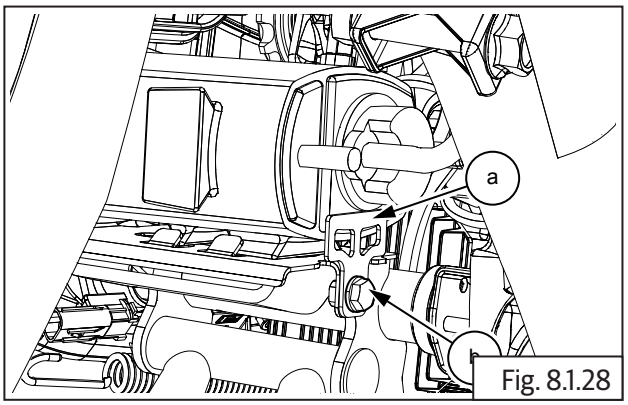

Fig. 8.1.28

	10 mm Socket with Ratchet
Torque	10 N·m/1.0 kgf m

- Secure the hoses through frame upper and lower wire guides **(a)**.

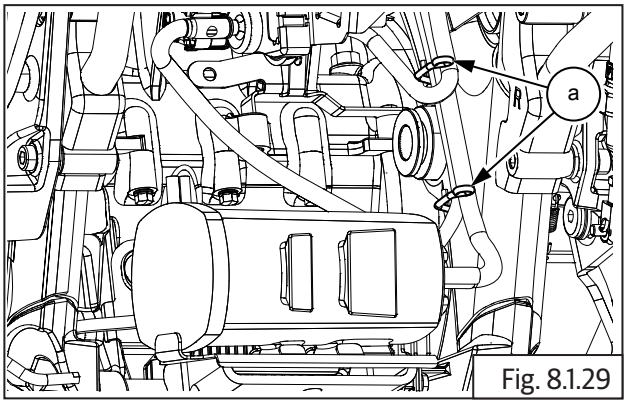

Fig. 8.1.29

- Connect breather hose **(a)** into canister and ensure it is properly routed on frame upper and lower wire guides **(b)**.

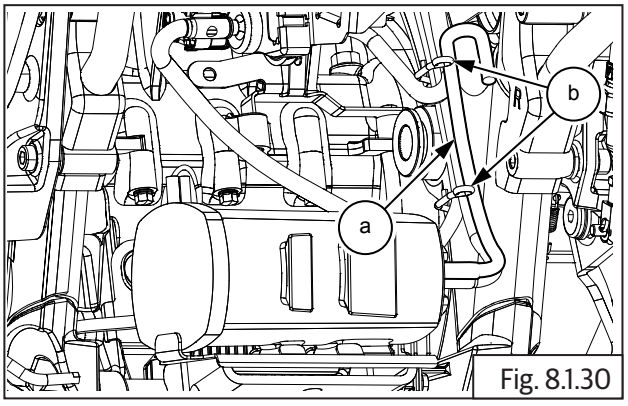

Fig. 8.1.30

- Reassemble the following parts:
  - Infill mudguard (section 6.6.10).
  - Connect roll over sensor connector (section 10.1.32).
  - Tighten rear mudguard front mounting torx screws (section 6.6.15).
  - Rear wheel (section 6.8.8).
  - ECU and connect wiring connectors (section 10.1.20).
  - Battery (section 11.5).
  - Fuel tank (section 7.1.15).
  - Side panel LH (section 6.7.5).
  - Seat (section 6.7.7).
  - Side panel RH (section 6.7.8).

BRAKES AND ABS

CONTENTS PAGE

9. Brakes and ABS 552

Dismantling 552

9.1. Brake - Front 552

9.1.1. Master Cylinder Assembly - Front 552

9.1.2. Brake Caliper - Front 554

9.1.3. Brake Disc - Front 555

9.2. Brake - Rear 556

9.2.1. Master Cylinder Assembly - Rear 556

9.2.2. Brake Caliper Assembly - Rear 560

9.2.3. Brake Disc - Rear 562

Inspection 562

Assembly 565

Brake - Rear 565

9.2.4. Brake Disc - Rear 565

9.2.5. Brake Caliper Assembly - Rear 566

9.2.6. Master Cylinder Assembly - Rear 568

Brake - Front 571

9.2.7. Brake Disc - Front 571

9.2.8. Brake Caliper - Front 572

9.2.9. Master cylinder - Front 574

9.3 Anti-lock Braking System (ABS) 576

Working Principle 576

Typical Motorcycle Braking Distance 576

Functions and Specifications of the ABS Aggregates 577

Dismantling 582

9.3.1. Modulator 582

9.3.2. Wheel Speed Sensor - Front 586

9.3.3. Wheel Speed Sensor - Rear 587

CONTENTS PAGE

9.3.4. Toner Ring – Front 588
9.3.5. Toner Ring –Rear 588
Assembly 588
9.3.6. Toner Ring – Front 588
9.3.7. Toner Ring –Rear 588
9.3.8. Wheel Speed Sensor - Rear 588
9.3.9. Wheel Speed Sensor - Front 589
9.3.10. Modulator 590
9.3.11 ABS DTC Codes 594
9.4. Preparation (Front Disc Brake) 597
9.5. Reassembly 599
9.6. Preparation (Rear Disc Brake) 600
9.7. Reassembly 601
9.8. Brake Bleeding 603
9.8.1. Front Brake Bleeding 603
9.8.2. Front Brake Fluid Leakage 606
9.8.3. Front Brake Fluid Top up 607
9.8.4. Rear Brake Bleeding 608
9.8.5. Rear Brake Fluid Leakage 610
9.8.6. Rear Brake Fluid Top Up 611

Brake - Front

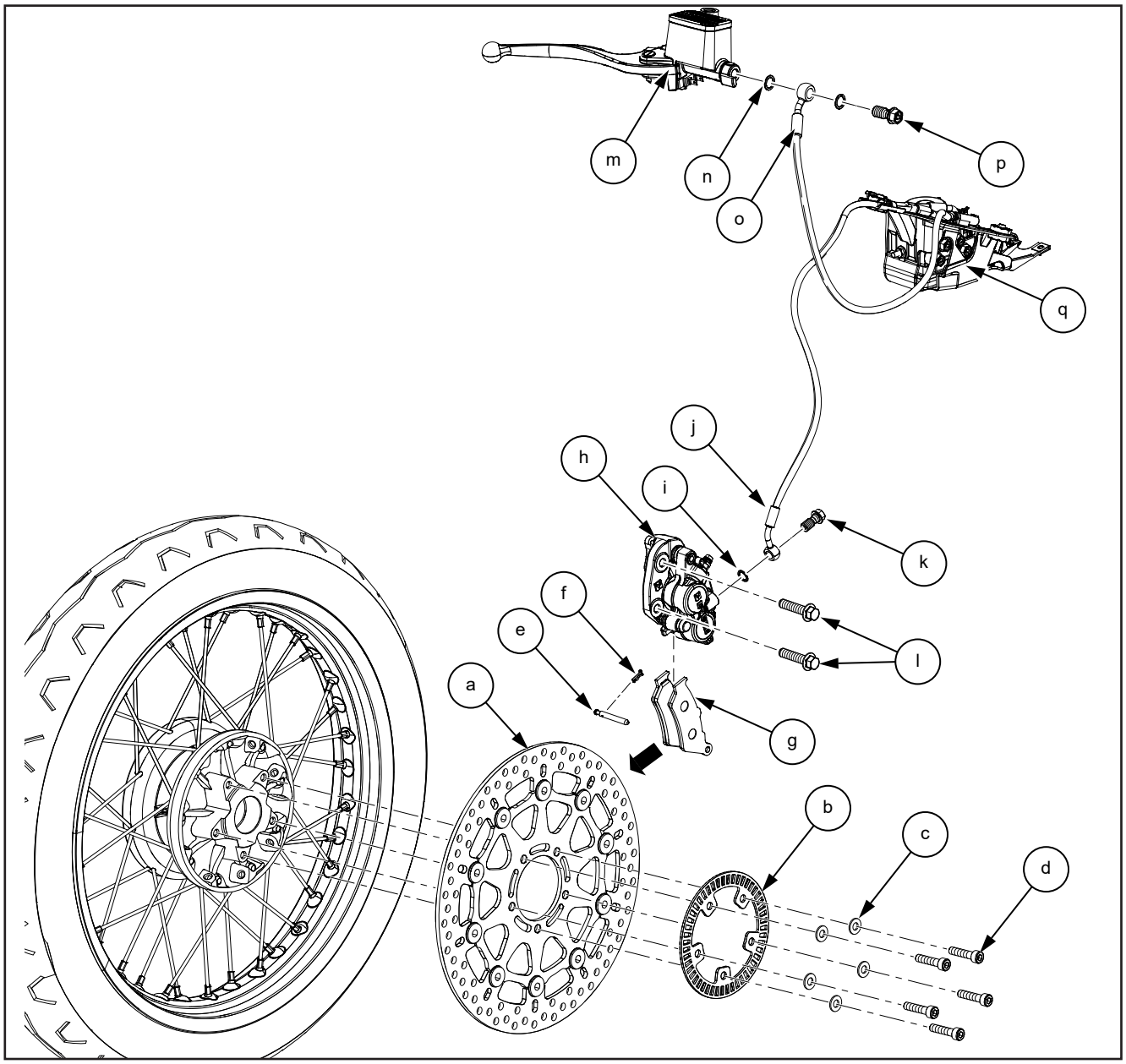

Item No.	Description	Quantity	Item No.	Description	Quantity
a	Brake Disc, 320 mm, Floating	1	j	Hose ABS Modulator to Front Brake Caliper	1
b	Toner Wheel, Front	1	k	Banjo Bolt Short	1
c	Washers	5	l	Flange Hex Bolt M10 x 1.5 x 44	2
d	Hex Soc Head Screw M6	5	m	Master Cylinder Assembly	1
e	Brake Pads Lock Pin	1	n	Washer, 10 x 1, Sealing	1
f	Clip	1	o	Hose ABS Modulator to Front MC	1
g	Front Brake Pads Set	1	p	Banjo Bolt Short	1
h	Brake Caliper Assembly	1	q	ABS Modulator assembly	1
i	Washer, 10 x 1, Sealing	1			

Brake - Rear

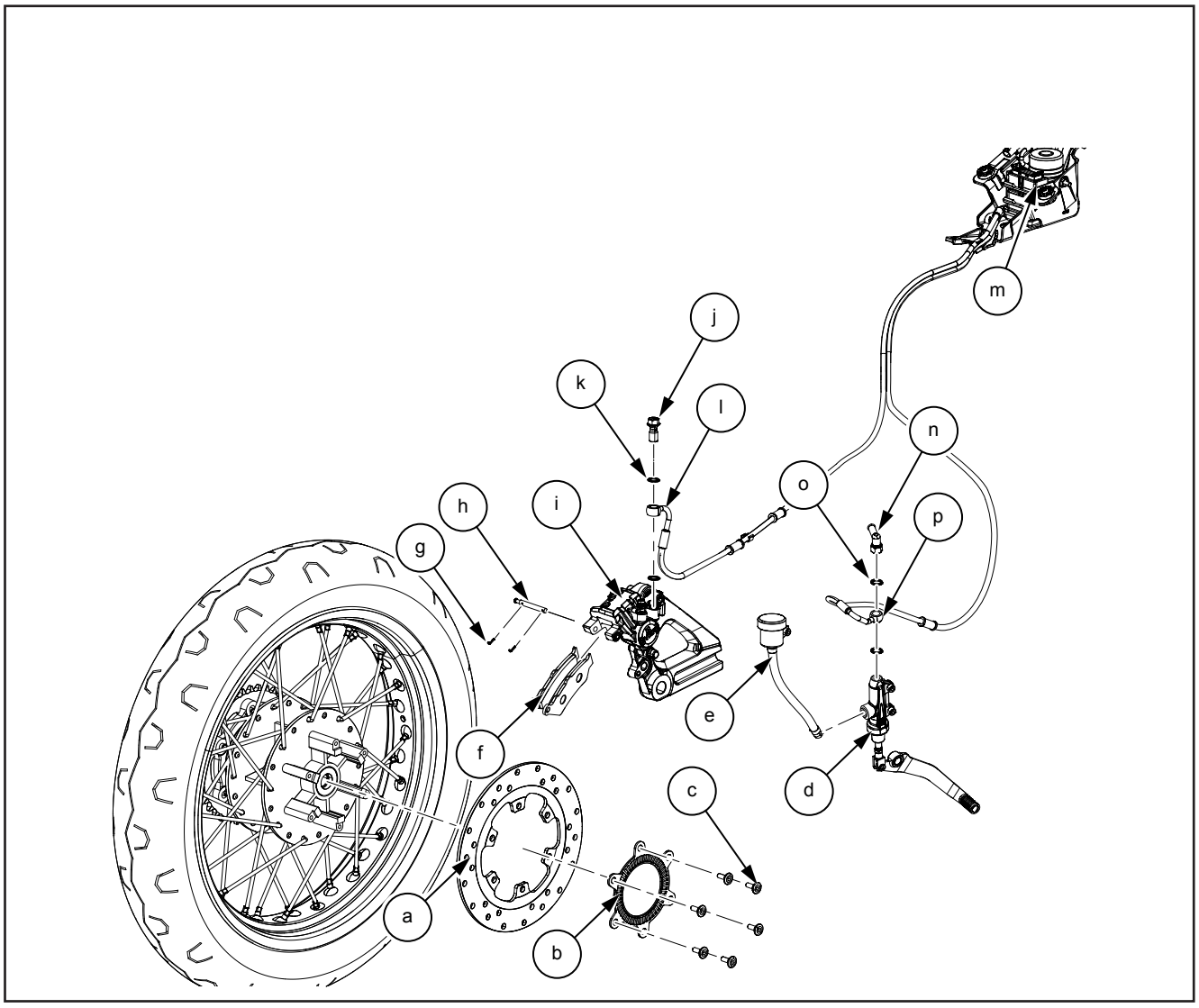

Item No.	Description	Quantity	Item No.	Description	Quantity
a	Rear Disc Plate	1	i	Brake Caliper Assembly - Rear	1
b	Toner Wheel-Rear	1	j	Banjo Bolt Short	1
c	Hex Head Socket Button Bolt M6	6	k	Washer, 10X1, Sealing	1
d	Master Cylinder (MC) Assembly Rear	1	l	Hose ABS Modulator to Front Brake Caliper	1
e	Brake Fluid Reservoir - Rear	1	m	ABS Modulator Assembly	1
f	Rear Brake Caliper Pads	2	n	Rear Brake Lamp Switch	1
g	Clips	2	o	Washer, 10X1, Sealing	1
h	Brake Pad Lock Pin	1	p	Hose ABS Modulator to Front Brake Caliper	1

Anti-lock Brake System

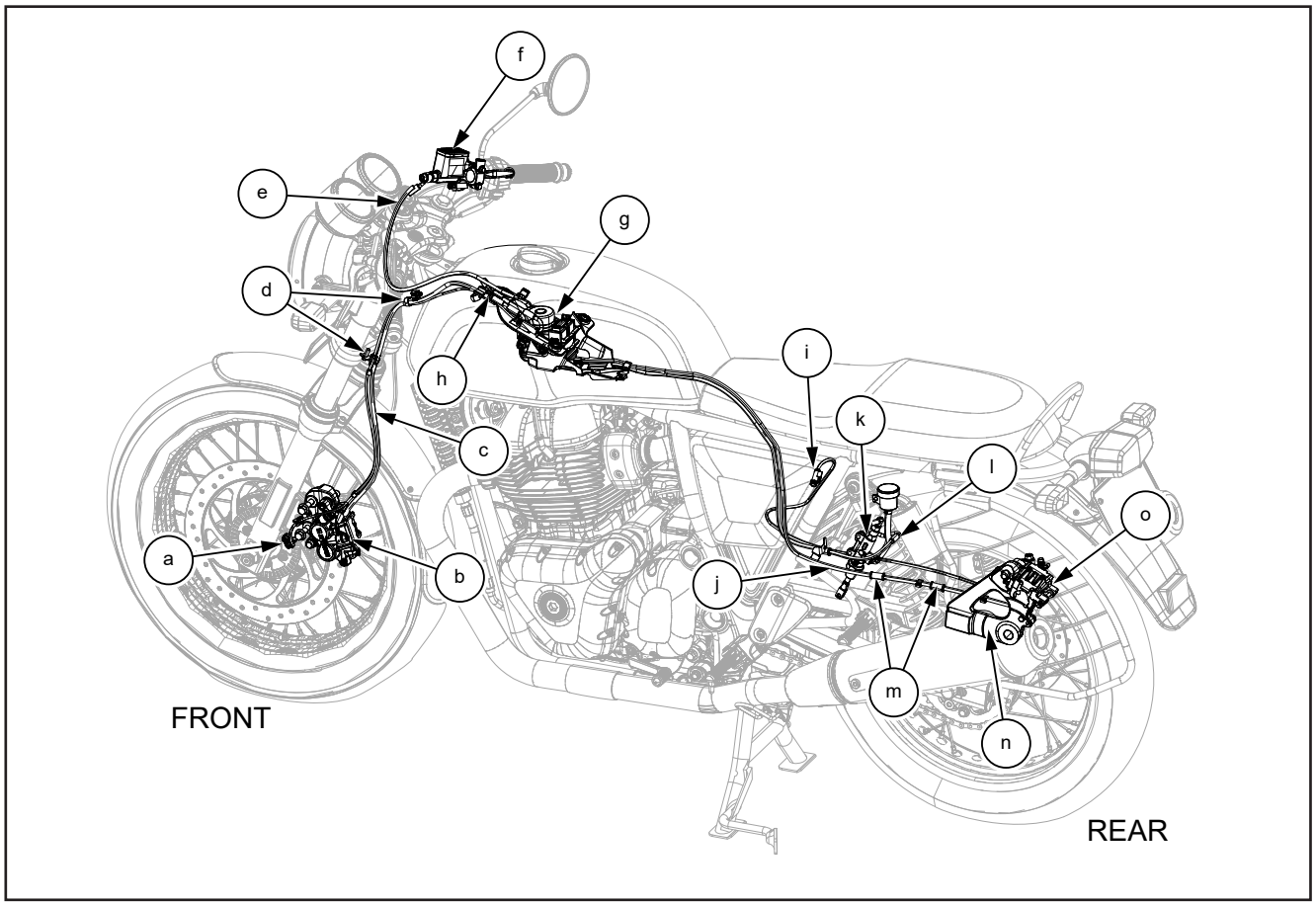

Item No.	Description	Quantity	Item No.	Description	Quantity
a	Wheel Speed Sensor - ABS - Rear	1	i	Connector Wheel Speed Sensor ABS - Rear	1
b	Brake Caliper Assembly - Front	1	j	Hose ABS Modulator to Rear Caliper -	1
c	Hose ABS Modulator to Front Caliper	1	k	Master Cylinder Assembly - Rear	1
d	Hose Guide	2	l	Hose ABS Modulator to Rear Master Cylinder	1
e	Hose ABS Modulator to Front Master Cylinder	1	m	Grommet	2
f	Master Cylinder Assembly - Front	1	n	Brake Caliper Assembly - Rear	1
g	ABS Modulator	1	o	Wheel Speed Sensor - ABS - Rear	1
h	Connector Wheel Speed Sensor ABS - Front	1			

9. Brakes and ABS

Dismantling

9.1. Brake - Front

⚠ CAUTION

Ensure the motorcycle is upright on a firm and flat surface.

Support motorcycle with suitable equipment below swing arm frame.

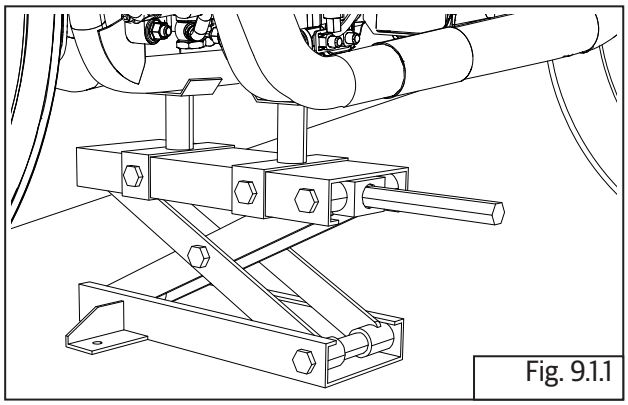

Fig. 9.1.1

- Before dismantling brake assembly, bleed out brake fluid (section 9.8.1).

NOTE

- *If brake pads are being replaced, then it is not necessary to perform system bleeding.*
- *Wheel should be dismantled only for brake disc plate removal.*

⚠ CAUTION

Whenever front brake caliper assembly is dismantled from front wheel, DO NOT depress brake lever as the piston in the caliper will move out/get misaligned.

DO NOT remove or disturb the wheel speed sensor on fork end LH.

9.1.1. Master Cylinder Assembly - Front

- Remove the following part:
- Rear view mirror from handlebar RH (section 6.3.1).

⚠ CAUTION

Ensure master cylinder assembly is supported carefully while disconnecting.

- Disconnect brake lamp switch connectors **(a)** from brake lamp switch **(b)**.

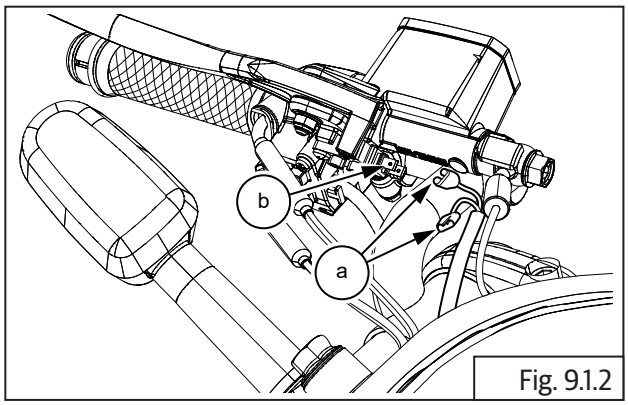

Fig. 9.1.2

- Loosen and remove banjo bolt **(a)** holding the brake hose **(b)** to front master cylinder to ABS modulator **(c)**.

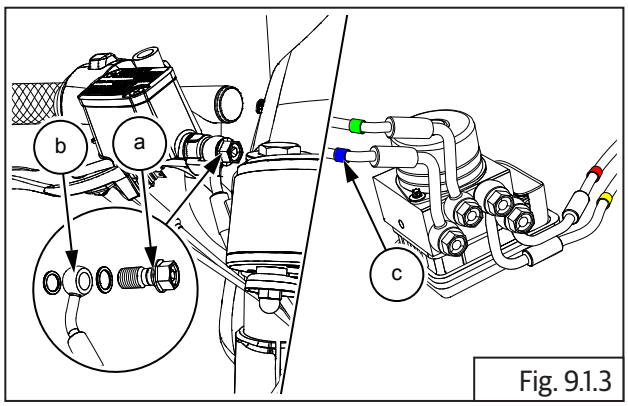

Fig. 9.1.3

- Loosen and remove 2 Nos. Hex bolts **(M5) (a)** along with washers from clamp and remove master cylinder assembly from handlebar RH.

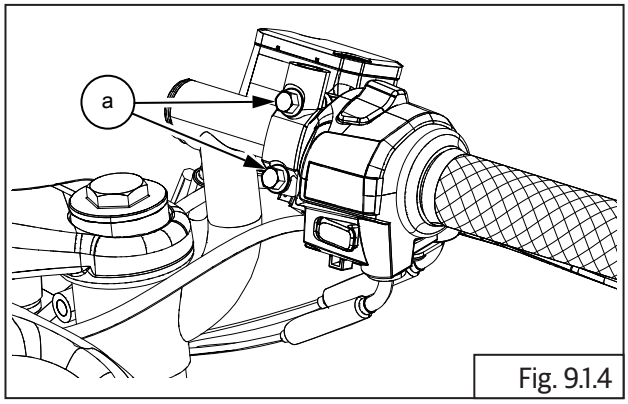

Fig. 9.1.4

	8 mm Socket with Ratchet

- Hold screw **(a)** at the top of brake lever, loosen and remove hex nut **(M6) (b)** at the bottom.
- Unscrew and remove top screw holding brake lever to master cylinder and remove brake lever.

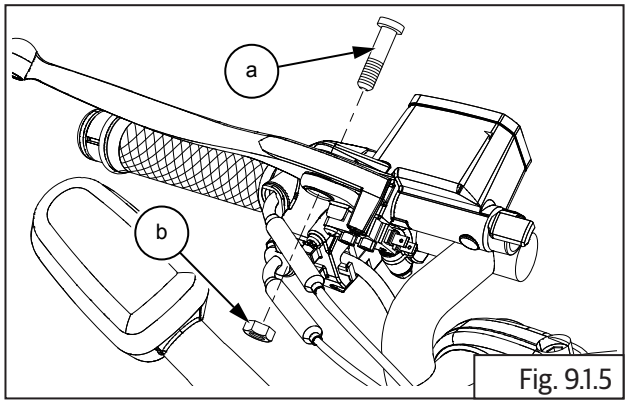

Fig. 9.1.5

	Screw driver and 10 mm Double end spanner

Dismantling Master Cylinder Front

- Remove boot **(a)** from the master cylinder assembly **(b)**.

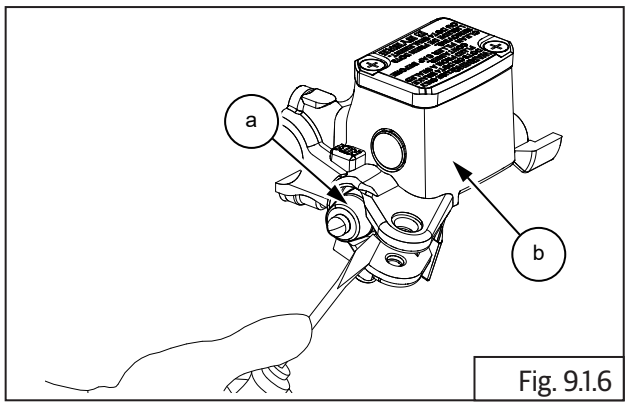

Fig. 9.1.6

	Screw driver

- Remove circlip **(a)** from the master cylinder assembly **(b)**.

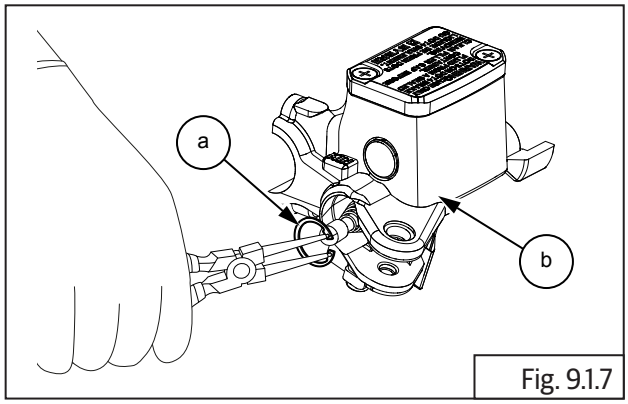

Fig. 9.1.7

	Circlip plier

- Remove the conical spring (piston compression spring) **(a)** from piston **(b)** .

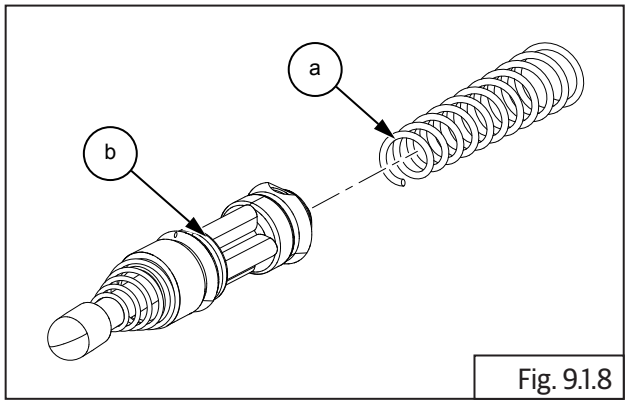

Fig. 9.1.8

9.1.2. Brake Caliper - Front

- Gently remove hose from caliper assembly (section 9.3.1).
- Support the front brake caliper assembly suitably.
- Loosen and remove upper and lower Hex flange head bolts **(M10) (a)** to remove front brake caliper assembly **(b)** from LH fork.

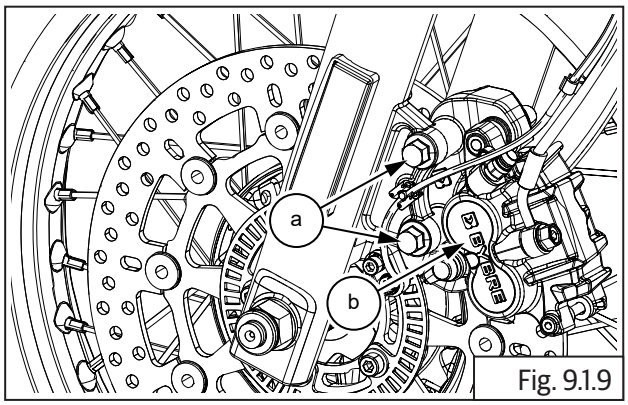

Fig. 9.1.9

	14 mm Socket with Ratchet

- Gently slide out front brake caliper assembly from front LH fork.
- Remove brake pad lock clip **(a)** from brake caliper assembly **(b)**.

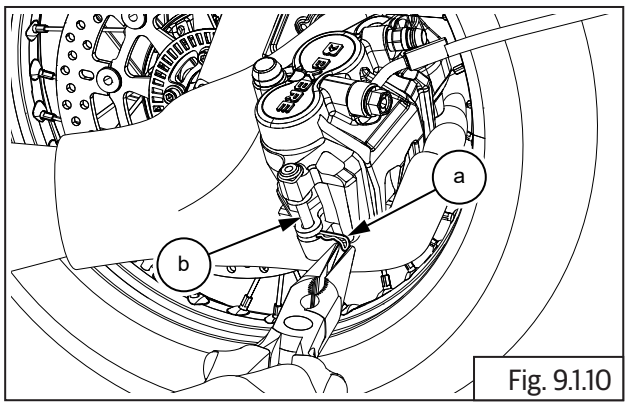

Fig. 9.1.10

	Nose plier

- Suitably support caliper and correctly tap brake pad pin **(a)** from inner side to outside.

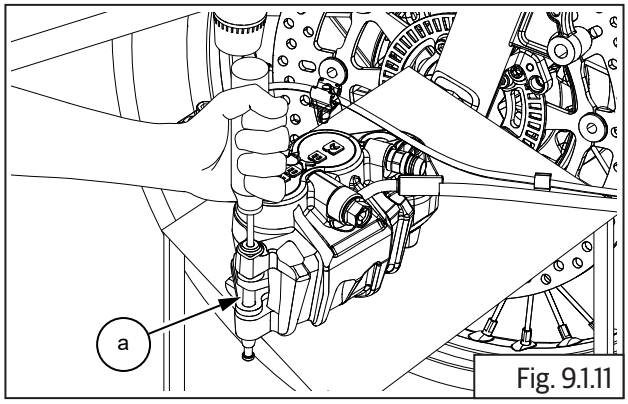

Fig. 9.1.11

- Once pin **(a)** is free, gently pull out pin from brake caliper.

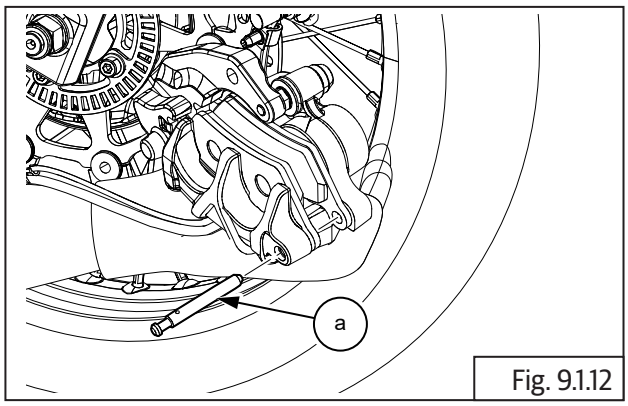

Fig. 9.1.12

- Slide out and remove brake pads **(a)** from brake caliper front **(b)**.

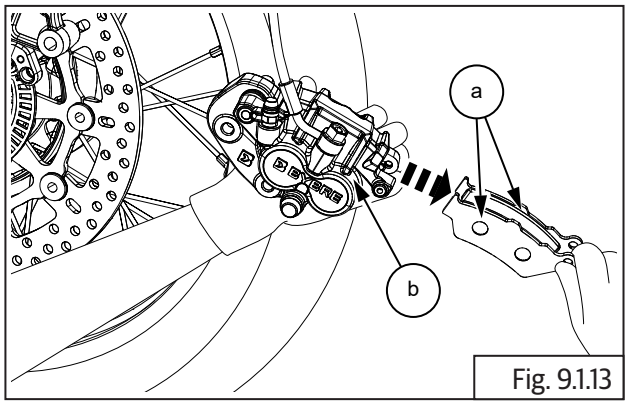

Fig. 9.1.13

Dismantling Front Brake Caliper

- Remove the pad tensioner spring plate **(a)**.

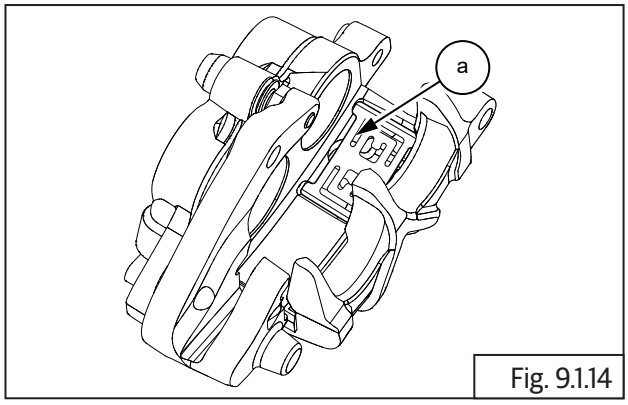

Fig. 9.1.14

- Remove mounting bracket from caliper assembly.

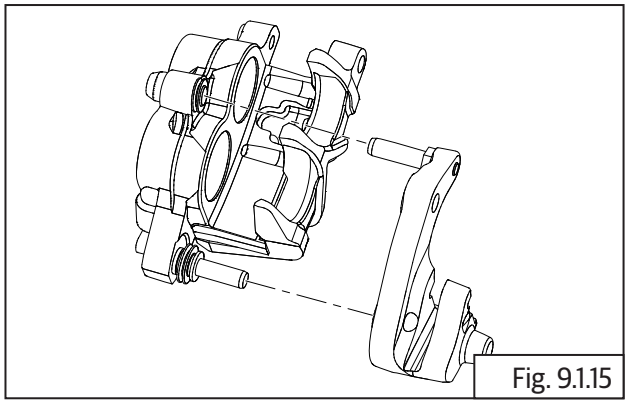
Fig. 9.1.15

- Remove the bellow and boot.
- Position caliper body with the pistons down and apply small squirts of air pressure to fluid inlet hole to remove pistons.

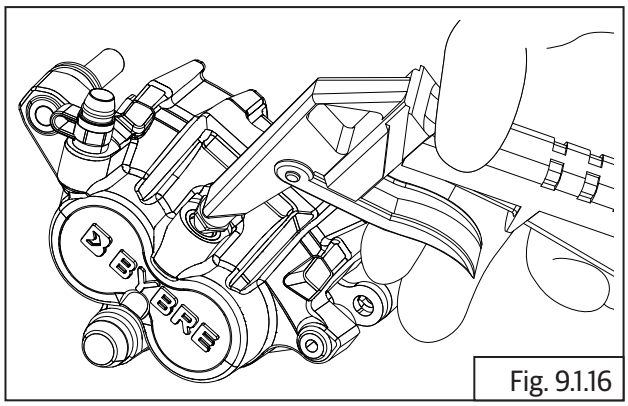
Fig. 9.1.16

⚠ CAUTION

Do not use high pressure air or bring the nozzle too close to the inlet. Place a shop towel over the pistons to prevent the pistons from becoming projectiles. Push the dust seals and piston seals in and lift them out using a blunt tool. Care should be taken to avoid any damages on the bore of the sliding surface.

Enough care should be taken to avoid damages of the piston OD while servicing/handling. Remove the bleed screw.

9.1.3. Brake Disc - Front

- Remove front wheel (section 6.8.1).
- Ensure wheel assembly is placed on a flat surface with disc plate facing upwards.

⚠ CAUTION

Ensure wheel hub does not get damaged.

- Loosen and remove 5 Nos. Hex socket head bolts **(M8) (a)** from wheel LH in criss cross pattern holding toner ring and brake disc to hub.

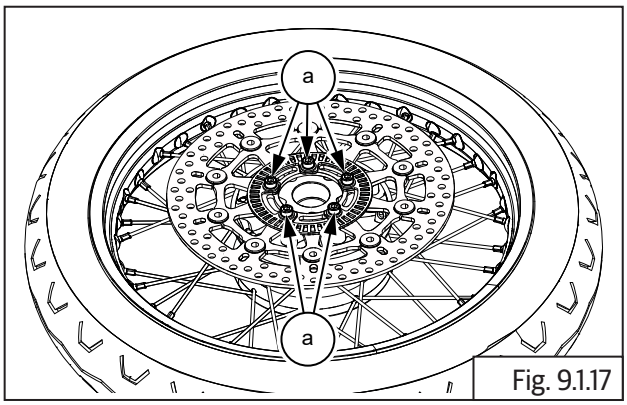

Fig. 9.1.17

	6 mm Allen socket with Ratchet

⚠ WARNING

DO NOT place/store the wheel with disc facing downward. It will cause bends and damages and change warpage.

- Remove toner wheel **(a)** and keep it aside safely.

⚠ CAUTION

Avoid any bends or damages to the toner wheel as it will have serious effects on ABS performance.

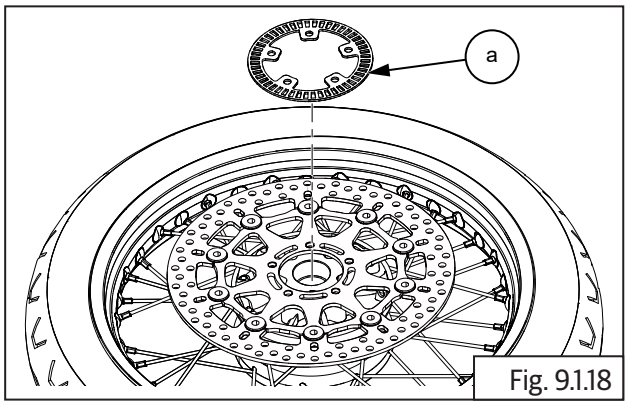

Fig. 9.1.18

- Remove front brake disc **(a)**.

⚠ CAUTION

Avoid any bends or damages to the brake disc as it will have serious effects on braking efficiency and will lead to juddering.

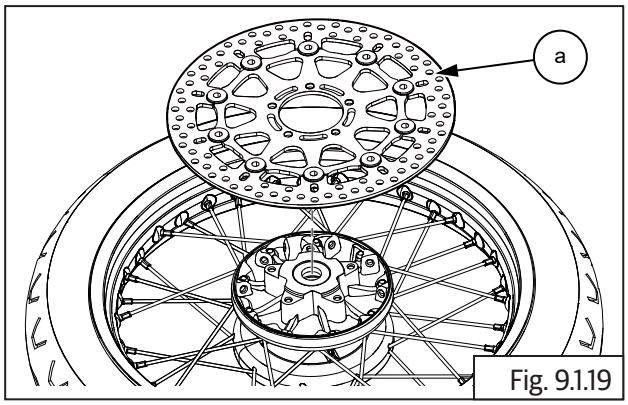

Fig. 9.1.19

9.2. Brake - Rear

⚠ CAUTION

Ensure the motorcycle is upright on a firm and flat surface.

Support motorcycle with suitable equipment below swing arm frame.

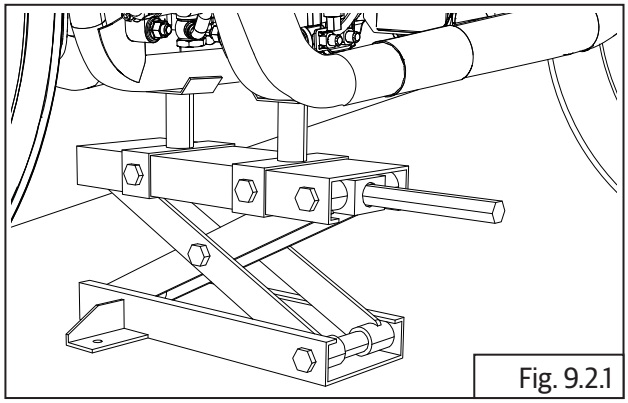
Fig. 9.2.1

9.2.1. Master Cylinder Assembly - Rear

- Disconnect brake lamp connector **(a)** from main wiring harness on motorcycle RH.
- Remove wire from rear mudguard infill cover **(b).**

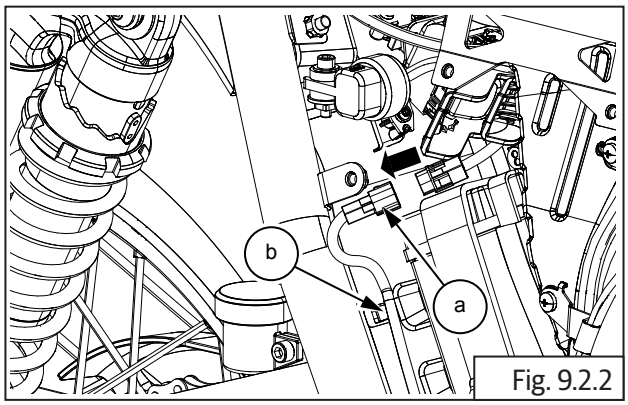

Fig. 9.2.2

- Loosen and remove 2 Nos. button socket head bolts **(M6) (a)** to remove master cylinder guard **(b)** from frame.

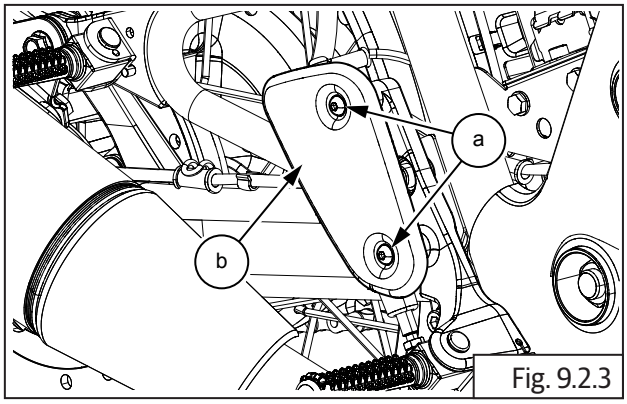

Fig. 9.2.3

	5 mm Allen socket with Ratchet

- Remove brake hose clip **(a)** from brake fluid reservoir **(b)** located near master cylinder assembly **(c)**.

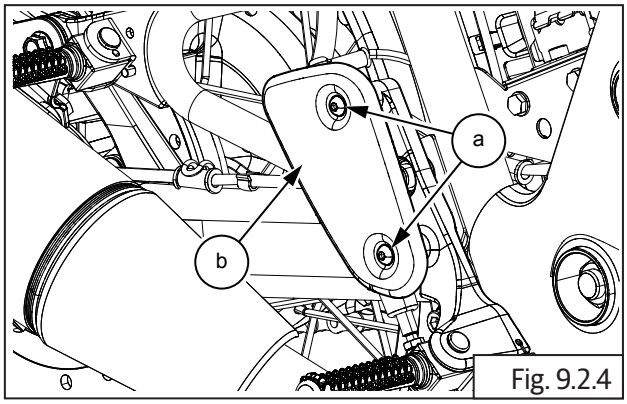

Fig. 9.2.4

- Collect brake fluid in container **(a)**.

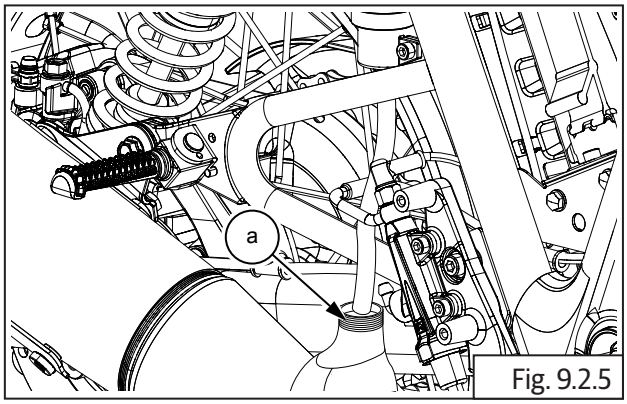

Fig. 9.2.5

- Loosen and remove brake lamp switch nut **(M8) (a)**.

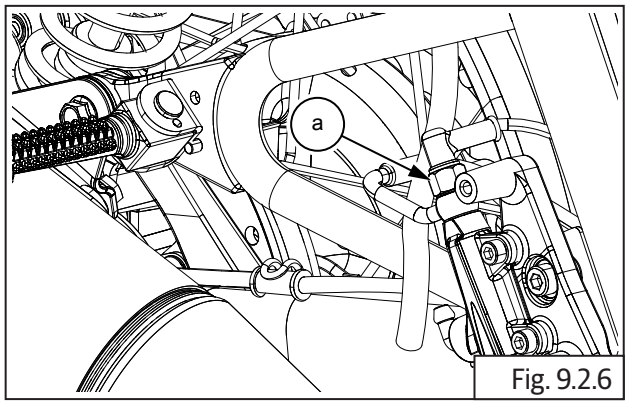

Fig. 9.2.6

	14 mm Double end spanner

- Remove split pin **(a)** from clevis pin located at the bottom of master cylinder assembly.

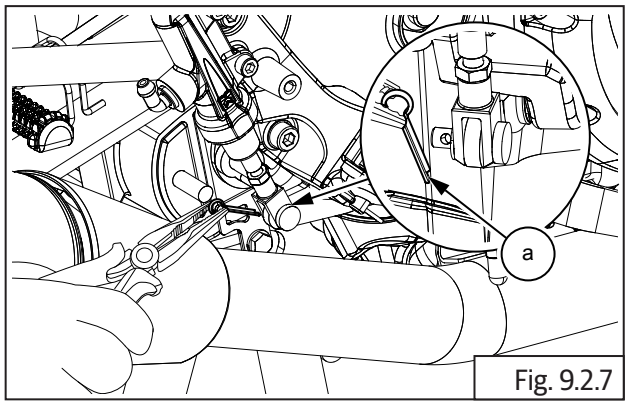

Fig. 9.2.7

	Nose plier

- Remove clevis pin **(a)** along with washer **(b)** from bottom of master cylinder assembly **(c)**.

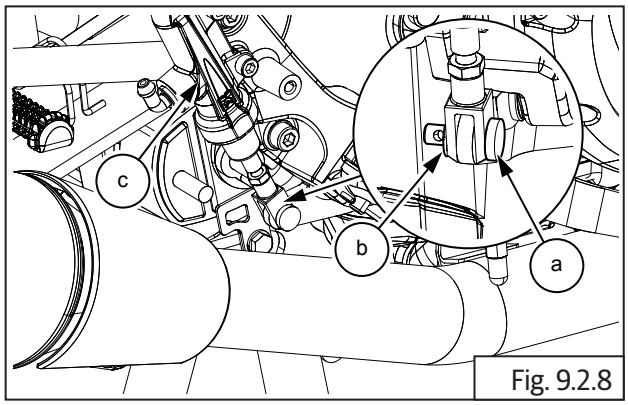

Fig. 9.2.8

	Nose plier

- Loosen and remove 2 Nos. Hex socket head bolts **(M6) (a)** to detach master cylinder assembly **(b)** from bracket.

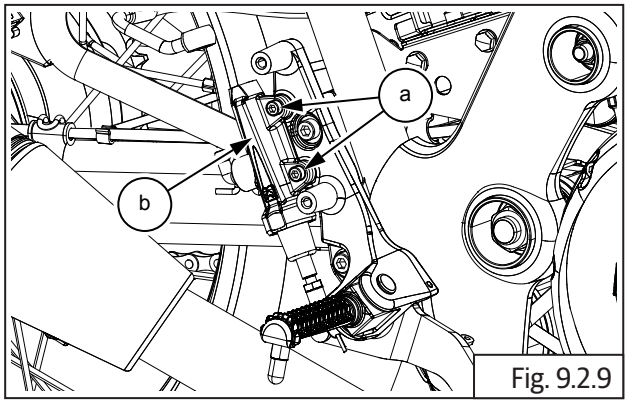

Fig. 9.2.9

	5 mm Allen socket with Ratchet

Dismantling Rear Brake Master Cylinder

- Remove protective rubber boot from master cylinder.

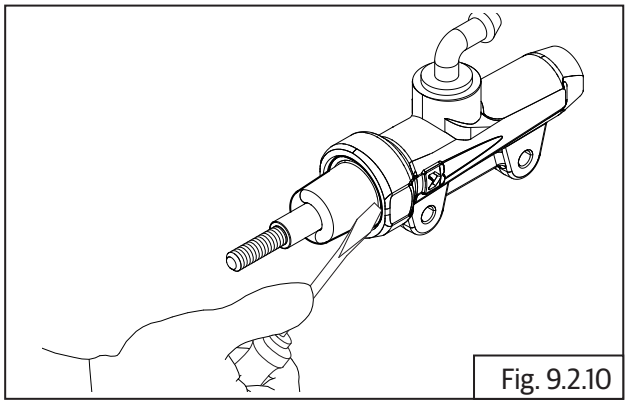
Fig. 9.2.10

	Screw driver

- Remove **(a)** circlip from the master cylinder body **(b)** slowly and carefully.

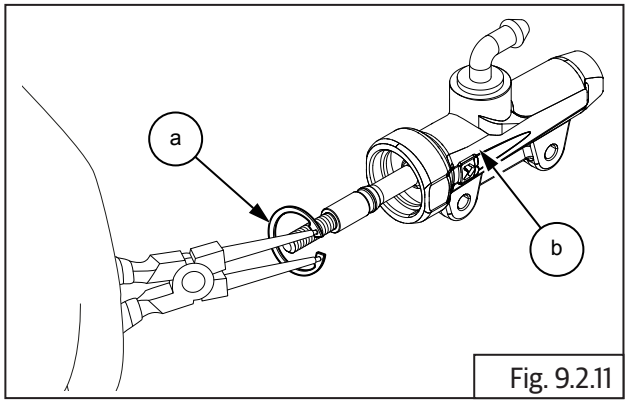

Fig. 9.2.11

	Circlip plier

- Gently pull out bush **(a)** with piston **(b)**, seals, spring guide and conical spring from master cylinder housing **(c)**.

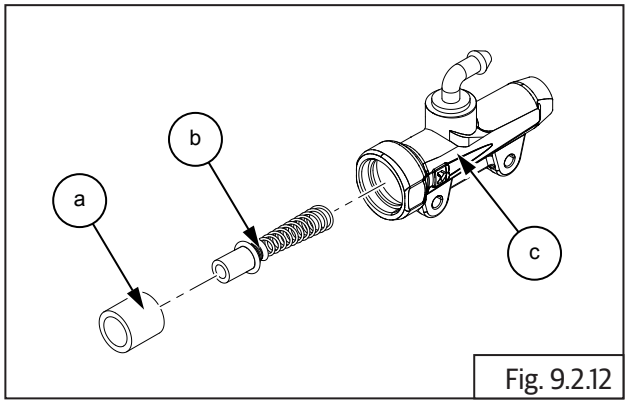

Fig. 9.2.12

⚠ CAUTION

Do not use any sharp tool to pull out the piston from the master cylinder. Pull out gently with minimum force.

Rear Brake Pedal

- Remove brake pedal spring **(a)** located on brake pedal **(b)**.

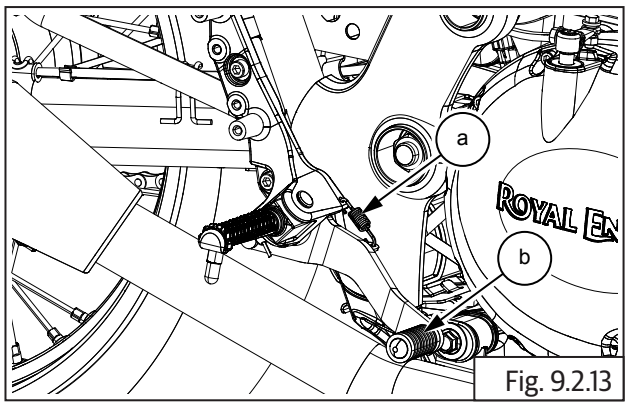

Fig. 9.2.13

	Nose plier

- Loosen and remove Hex socket bolt **M6 (a)** to remove fluid reservoir **(b)**.

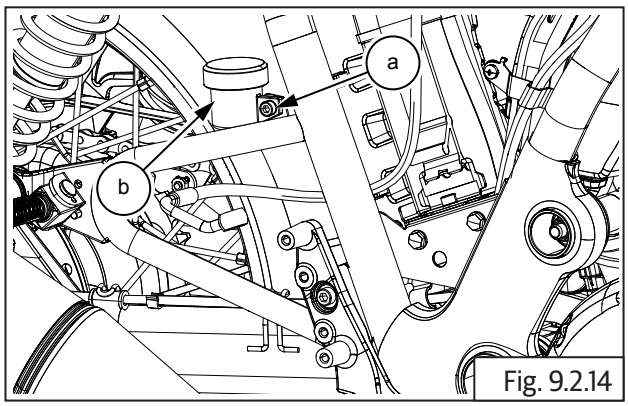

Fig. 9.2.14

	5 mm Allen socket with Ratchet

- Loosen and remove 2 Nos. Hex socket bolt **(M6) (a)** to remove master cylinder bracket **(b)** from motorcycle.

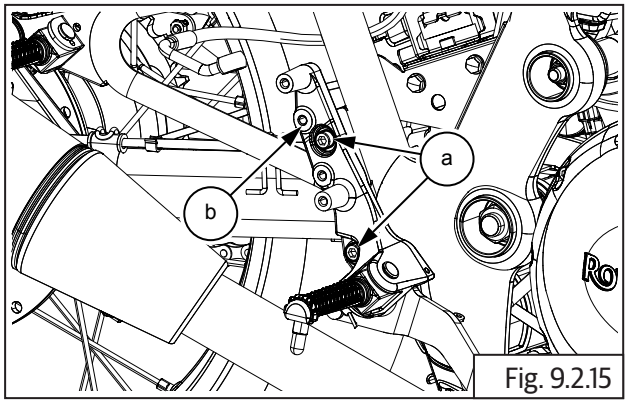

Fig. 9.2.15

	5 mm Allen socket with Ratchet

- Remove master cylinder bracket **(a)** along with brake pedal **(b)** from motorcycle.

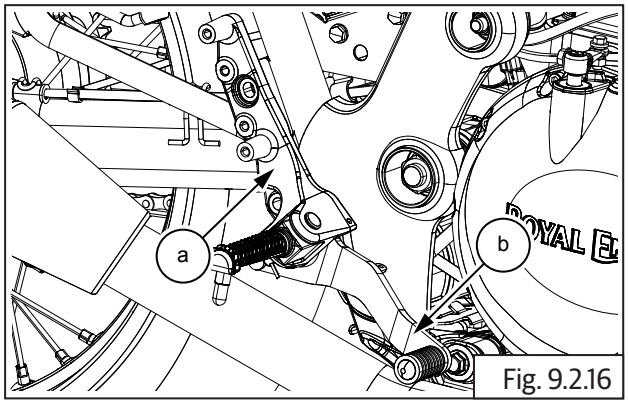

Fig. 9.2.16

- Loosen and remove Hex socket bolt **(M8) (a)** to detach master cylinder bracket from brake pedal **(b)**.

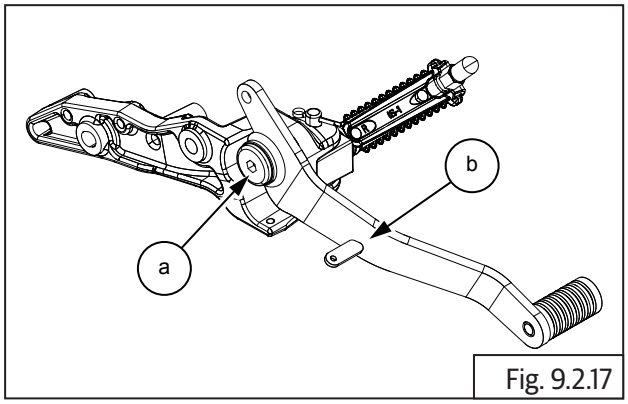

Fig. 9.2.17

	6 mm Allen socket with Ratchet

- Separate master cylinder bracket **(a)** and brake pedal **(b)**.

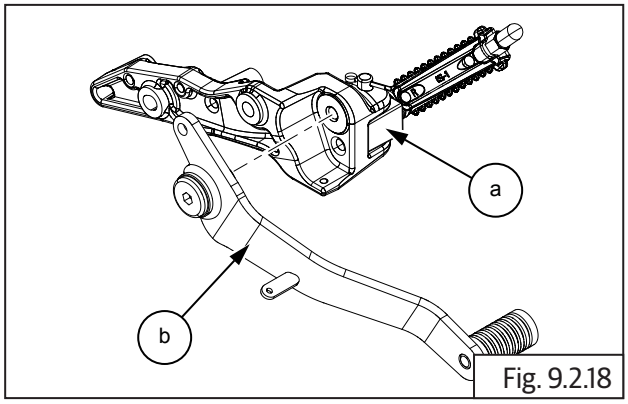

Fig. 9.2.18

9.2.2. Brake Caliper Assembly - Rear

- Remove the following:
  - Swing arm bolt, spindle and chain adjuster assembly from rear wheel (section 6.8.3).
- Loosen and remove Hex socket head screw **(M6) (a)** located below brake caliper on RH rear wheel.

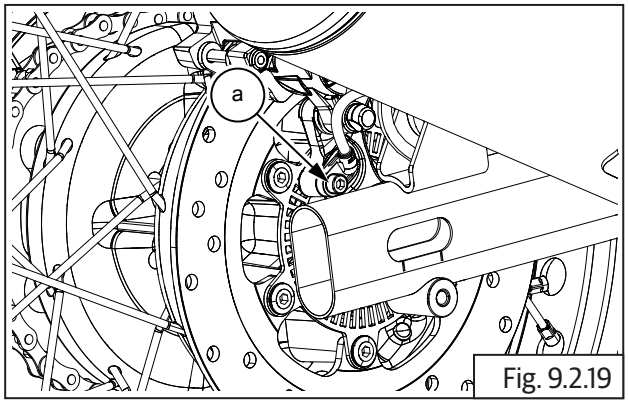

Fig. 9.2.19

	5 mm Allen socket with Ratchet

- Gently remove rear wheel speed sensor ABS **(a)** from rear wheel hub.

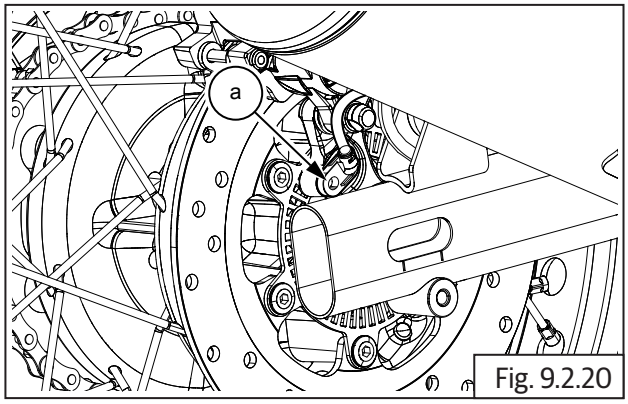

Fig. 9.2.20

- Remove brake pad outer clip **(a)** from brake pad lock pin.

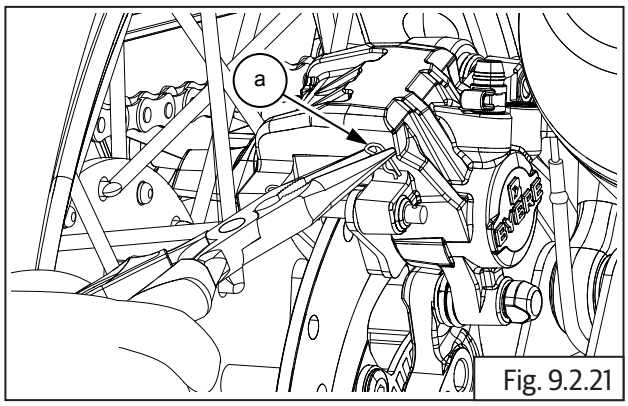

Fig. 9.2.21

	Nose plier

- Remove brake pad inner clip **(a)** from brake pad lock pin.

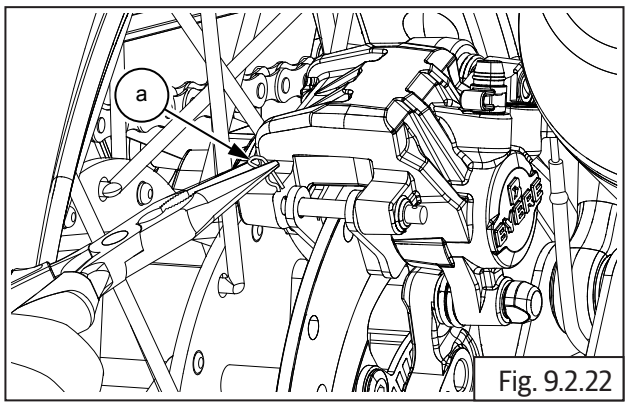

Fig. 9.2.22

	Nose plier

- Remove brake pad lock pin **(a)** from brake caliper **(b)**.

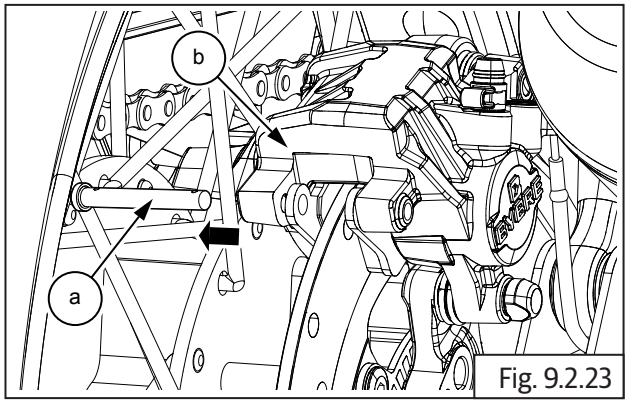

Fig. 9.2.23

	Screw Driver

- Slide out and remove brake pads **(a)** from brake caliper.

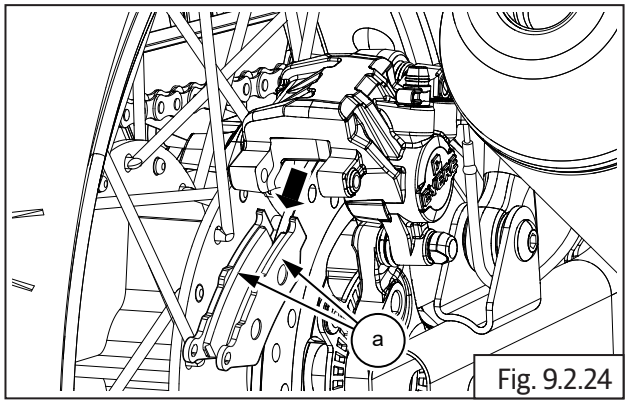

Fig. 9.2.24

- Slide out and remove brake caliper **(a)** with holder.

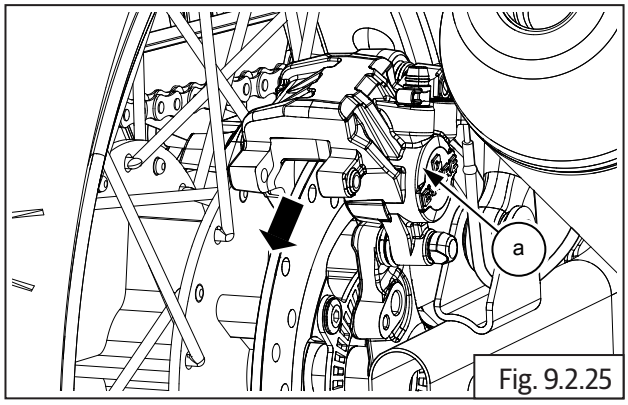

Fig. 9.2.25

Dismantling Rear Brake Caliper

- Separate the mounting bracket from the caliper assembly by gently pulling them apart.

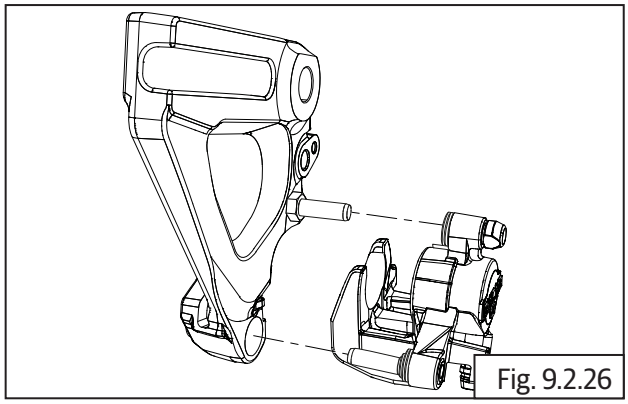
Fig. 9.2.26

- Position caliper body with pistons down and apply small squirts of air pressure to the fluid inlet hole to remove pistons.

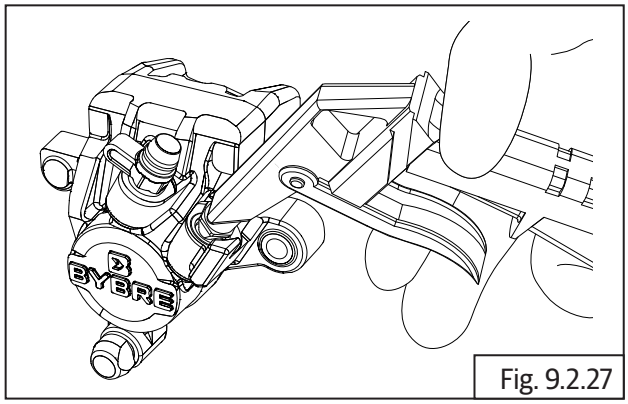
Fig. 9.2.27

⚠ CAUTION

DO NOT use high pressure air or bring the nozzle too close to the inlet. Place a shop towel over the pistons to prevent the pistons from becoming projectiles. Push the dust seals and piston seals in and lift them out using a blunt tool. Care should be taken to avoid any damage on the bore of the sliding surface.

Enough care should be taken to avoid damages of the piston OD while servicing/handling. Remove the bleed Screw.

9.2.3. Brake Disc - Rear

- Remove drive chain and rear wheel from swing arm (section 6.8.3).
- Loosen and remove 6 Nos. Hex head button socket screws **(M6) (a)** from rear wheel disc hub RH **(b)**.

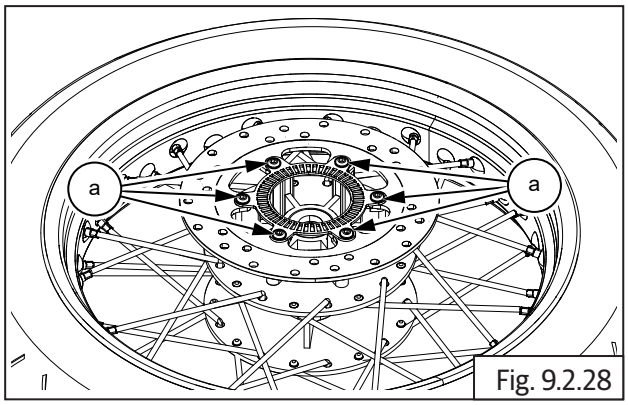

Fig. 9.2.28

	5 mm Allen socket with Ratchet

- Remove ABS toner wheel **(a)** from rear wheel hub RH.

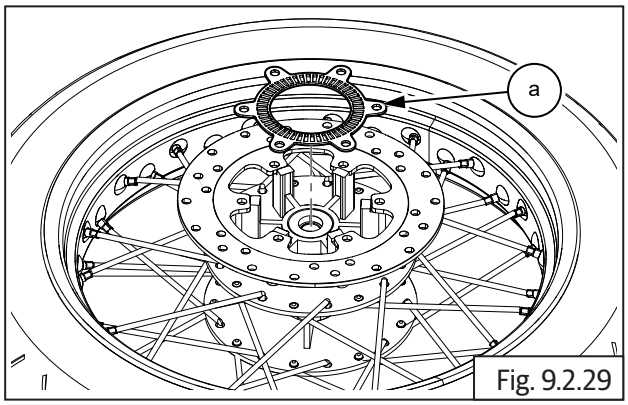

Fig. 9.2.29

- Remove rear disc plate **(a)** from rear wheel hub RH and keep aside safely.

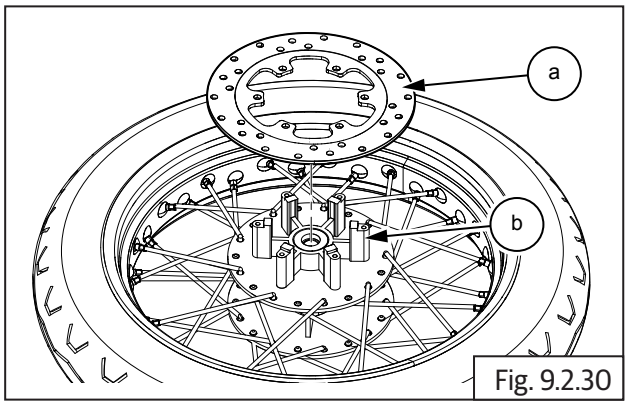

Fig. 9.2.30

Inspection

- Inspect for rust, deep scoring, any foreign materials, burn marks crack in the mounting location of front and rear brake discs.
- Inspect front and rear brake disc thickness and run-out. Measure depth at points where scoring is found on the discs and replace if there is excess wear. (Need to confirm).

Standard:	0.00 mm
Service limit:	0.10 mm

- Also measure thickness at the points indicated in the illustration and replace disc if out of specifications.

Front brake disc.

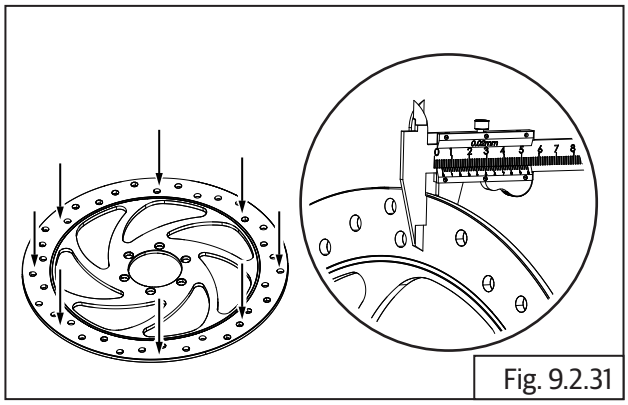
Fig. 9.2.31

Rear brake disc.

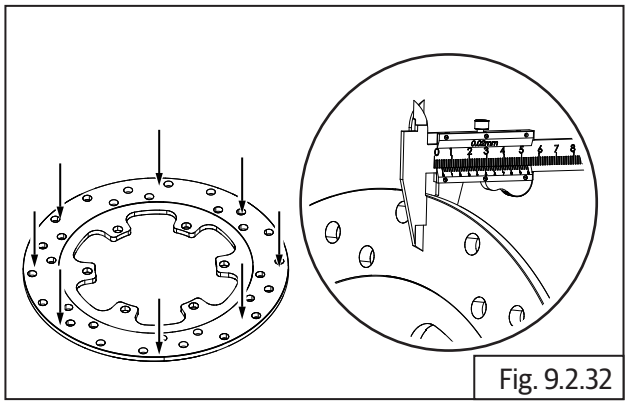
Fig. 9.2.32

	Vernier caliper

Service limit:	0.8 mm

- Place brake disc rotor on a flat surface and inspect warpage. Replace if it is out of specifications.

Front brake disc.

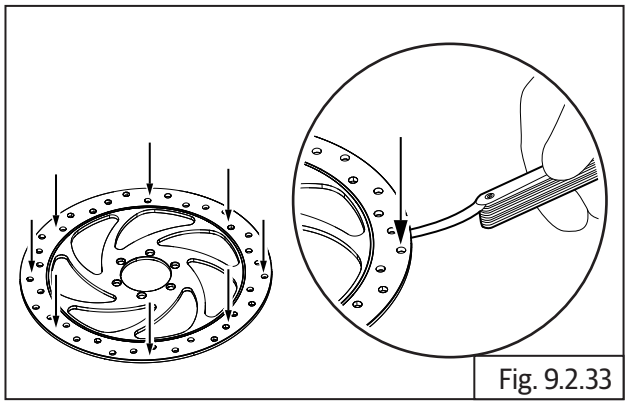

Fig. 9.2.33

Rear brake disc.

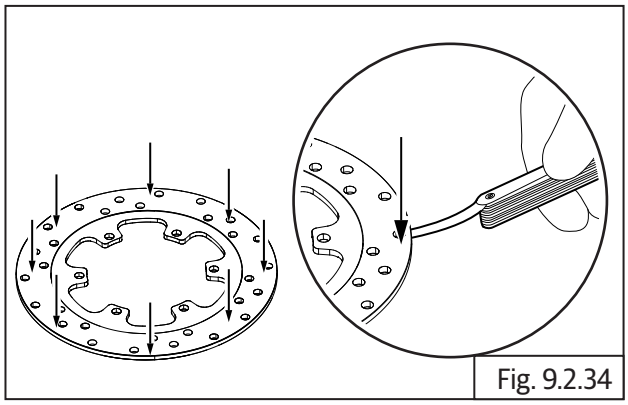

Fig. 9.2.34

	Feeler gauge

Standard:	0.00 mm
Service limit:	0.10 mm

- Inspect and replace toner wheel front if there are any damages or bends.
- Place toner wheel front on a flat surface and check warpage. Replace if out of specifications.

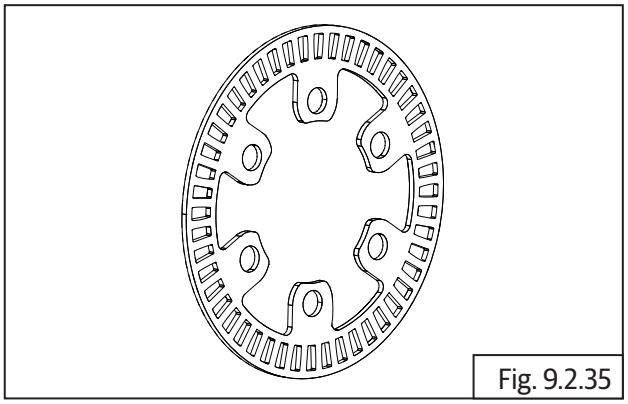

Fig. 9.2.35

- Inspect and replaces toner wheel rear ABS **(a)** if there are any damages bends.
- Place ABS toner wheel on a flat surface and check warpage. Replace if out of specifications.

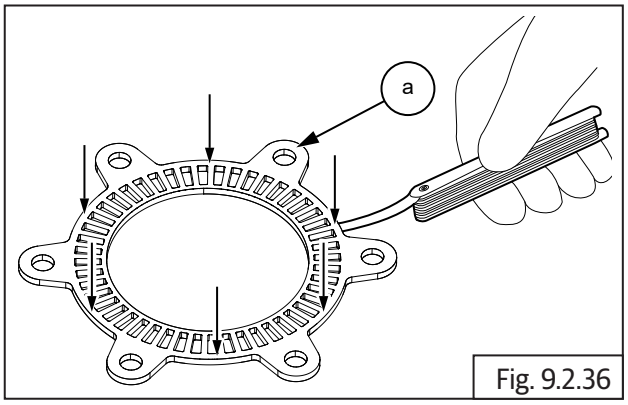

Fig. 9.2.36

	Feeler gauge

Standard:	0.00 mm
Service limit:	0.10 mm

- After assembly of brake disc **(a)** into front wheel, insert spindle into rim, fix on wheel balance frame **(b)** and rotate rim to check the disc run-out with dial gauge **(c)**. Ensure run-out is within specified limits.

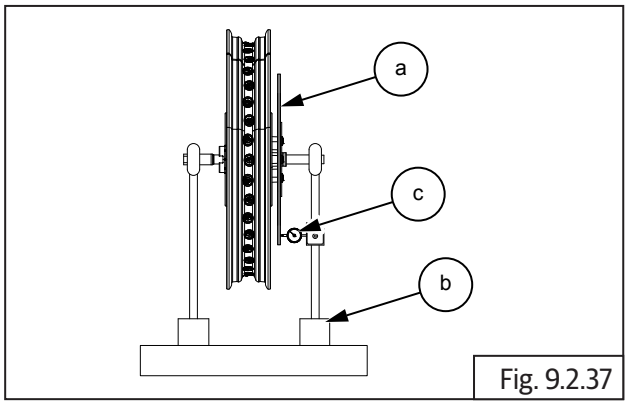

Fig. 9.2.37

	Dial gauge

Service limit:	1 mm

⚠ CAUTION

Run-out of brake disc should be checked only when brake disc is assembled on wheel hub.

- Inspect brake pad thickness- front and rear. Replace if worn-out.

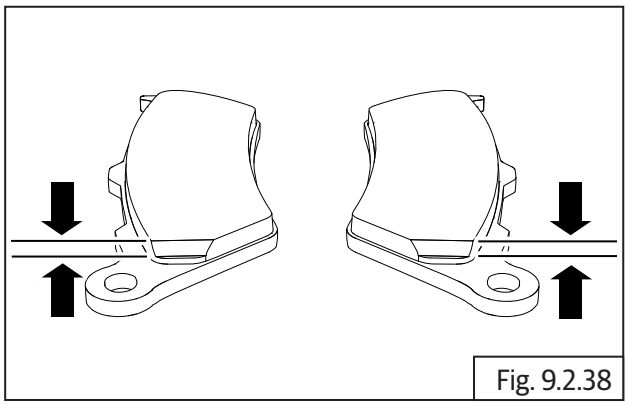
Fig. 9.2.38

- Check brake fluid level and top up if line is below 'MIN' level **(a)**.

Front

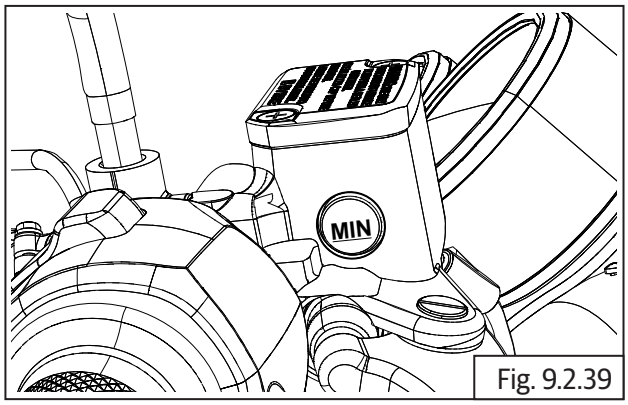

Fig. 9.2.39

Rear

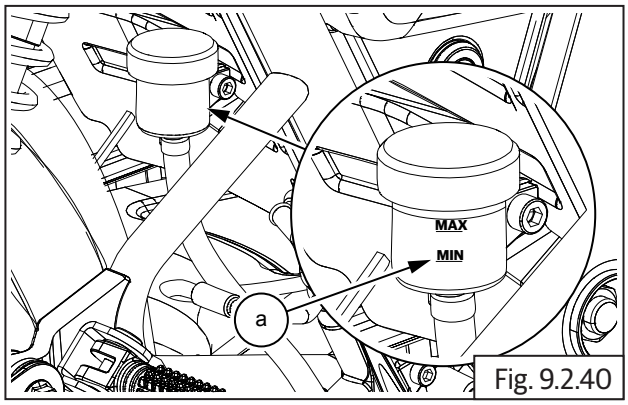

Fig. 9.2.40

⚠ CAUTION

DO NOT mix DOT 4 and other brake fluids together

- Inspect brake lever front **(a)** free play and brake pedal rear **(b)** free play. If free play is spongy, check brake pads for wear or tear and replace and follow brake bleeding procedure.

Front

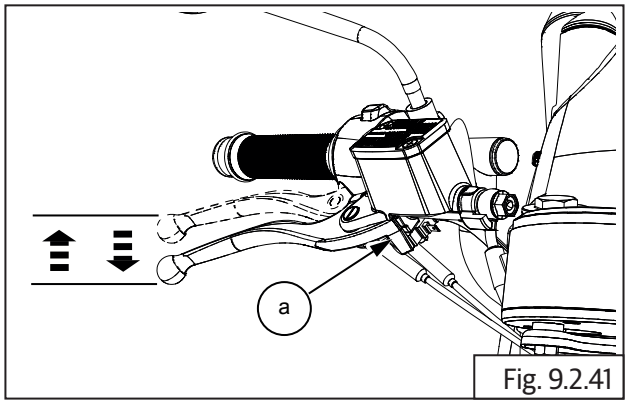

Fig. 9.2.41

Rear

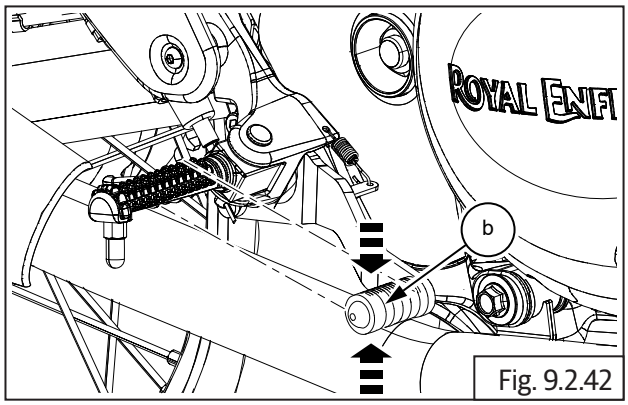

Fig. 9.2.42

- Inspect and replace front and rear brake hoses **(a)** if they have any cracks, leakages or damages.

Front

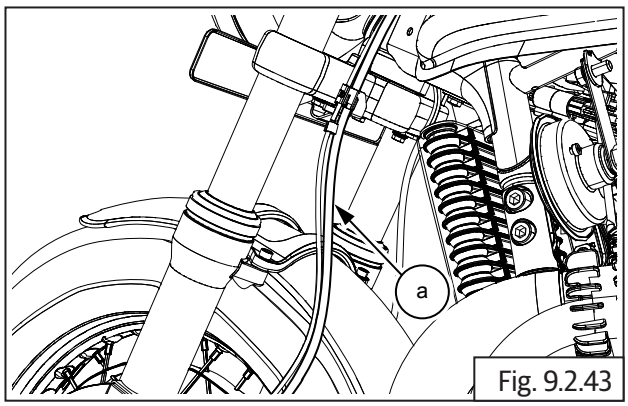

Fig. 9.2.43

Rear

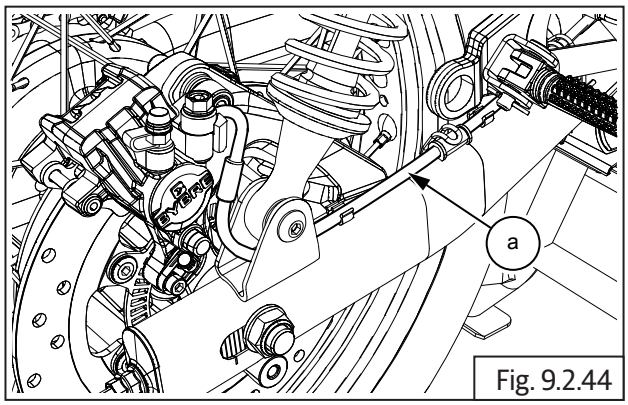

Fig. 9.2.44

Assembly

Brake - Rear

9.2.4. Brake Disc - Rear

- Assemble rear disc plate **(a)** into rear wheel hub RH **(b)**.

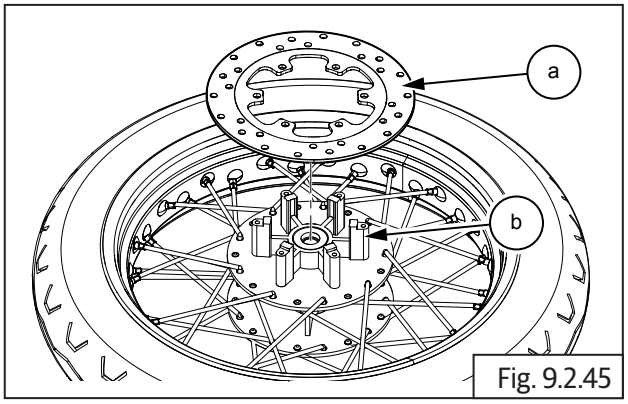

Fig. 9.2.45

- Assemble ABS toner **(a)** into rear wheel hub RH.

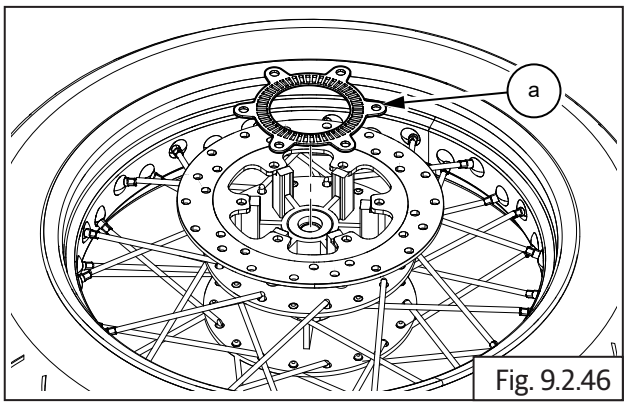

Fig. 9.2.46

- Insert and tighten 6 Nos. Hex head button socket screws **(M6) (a)** into rear wheel disc hub RH.

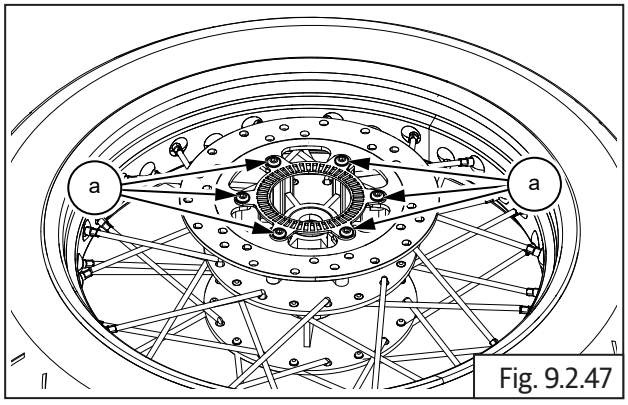

Fig. 9.2.47

	5 mm Allen socket with Ratchet
Torque	10 N-m/1.0 kgf-m

- Assemble drive chain and rear wheel into swing arms (section 6.8.8).

9.2.5. Brake Caliper Assembly - Rear

Assembling Rear Brake Caliper

- Coat fresh brake fluid on new dust seals and piston seals.
- Install piston seals in the inner groove **(a)** and dust seals in the outer groove **(b)** in the bore in caliper assembly.

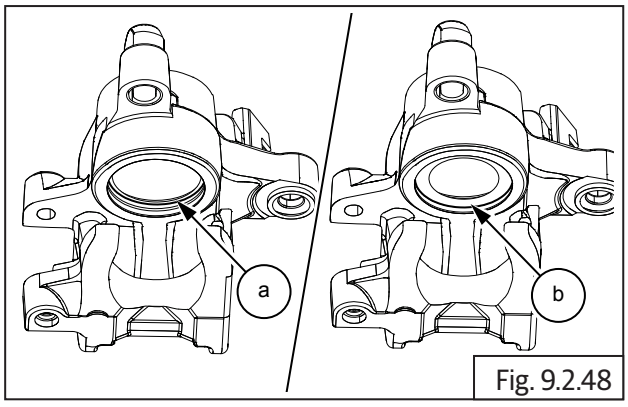

Fig. 9.2.48

- Coat the caliper cylinder and piston with fresh brake fluid.
- Insert the closed end of the piston **(a)** into the caliper bore and gently press it into caliper fully till the open ends of the piston are flush with the caliper bore outer edge

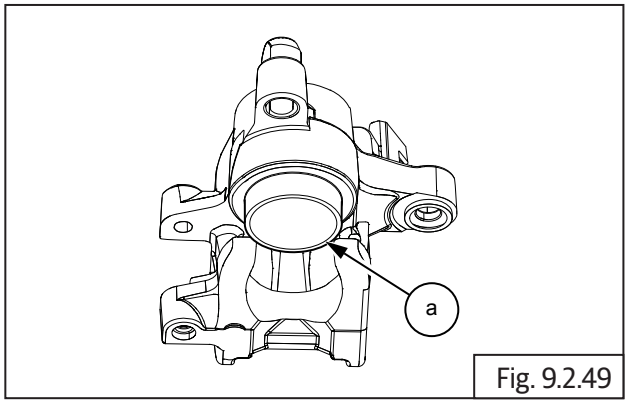

Fig. 9.2.49

⚠ CAUTION

DO NOT apply force while assembling the piston into the caliper. Press only with minimal hand pressure.

- Assemble the rubber grommets **(a)** on the bracket mounting area of the caliper.

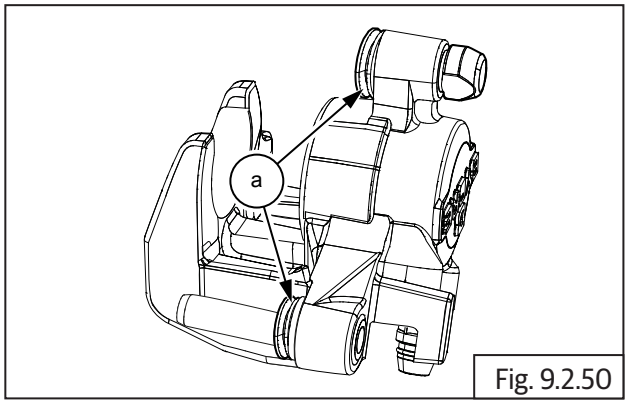

Fig. 9.2.50

- Locate bracket **(a)** on the caliper **(b)** and gently press caliper into bracket fully.

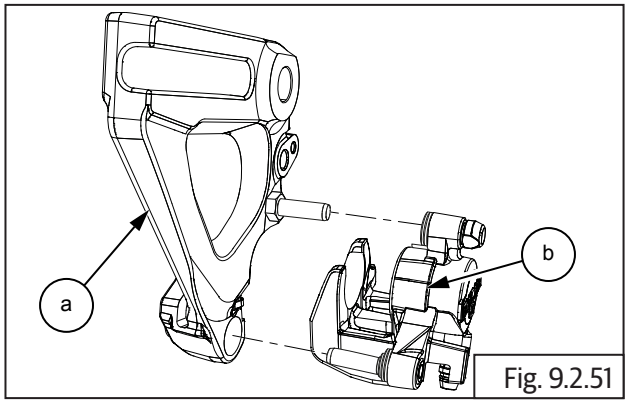

Fig. 9.2.51

- Install the pad tension spring plate **(a)** in the Caliper body.

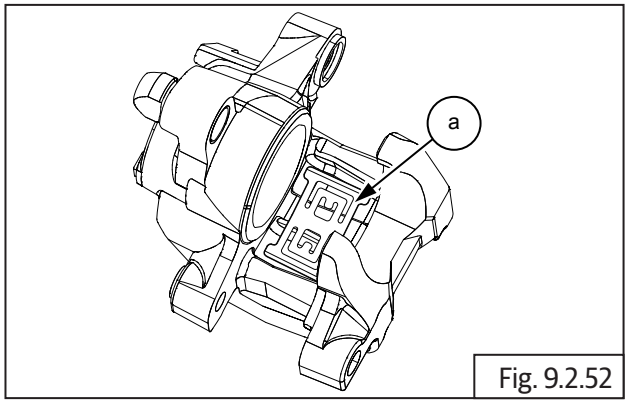

Fig. 9.2.52

- Assemble Bleed screw **(a)** with the dust cap on the caliper body.

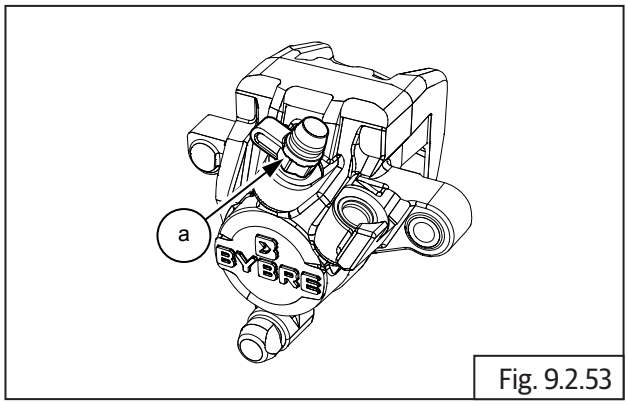

Fig. 9.2.53

- Gently locate brake caliper **(a)** with holder onto brake disc.

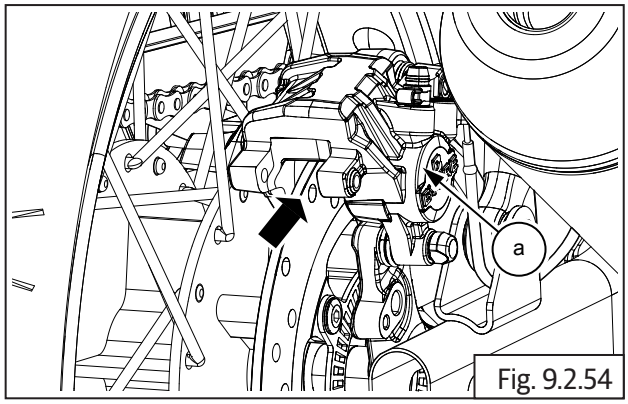

Fig. 9.2.54

Rear Brake Pads in Wheel Caliper

- Gently locate brake pads **(a)** into brake caliper.

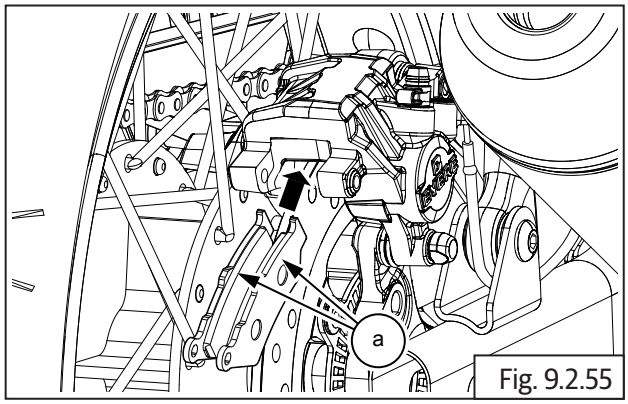

Fig. 9.2.55

- Locate brake pad lock pin **(a)** into brake caliper **(b)**.

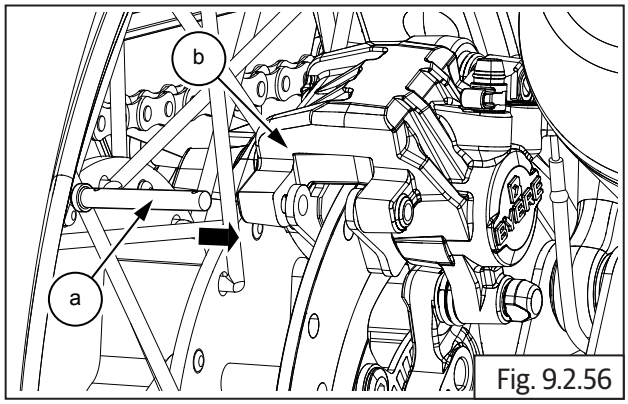

Fig. 9.2.56

	Screw Driver

- Install brake pad inner clip **(a)** into brake pad lock pin.

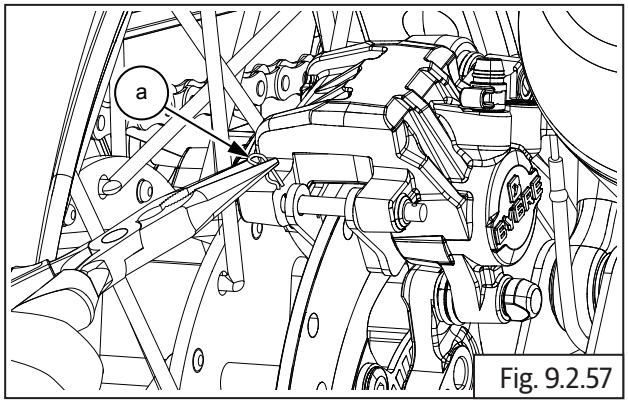

Fig. 9.2.57

	Nose plier

- Install brake pad outer clip **(a)** into brake pad lock pin.

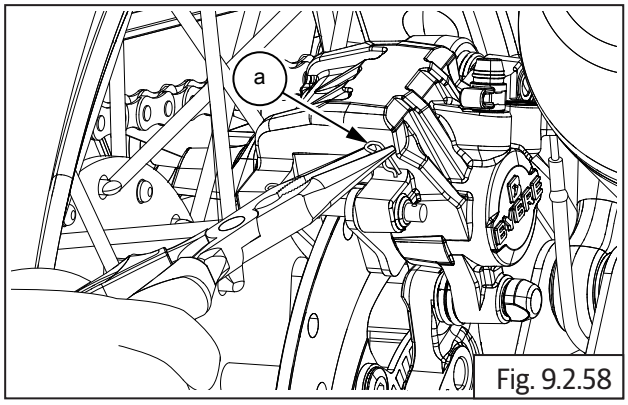

Fig. 9.2.58

	Nose plier

- Gently assemble rear wheel speed sensor ABS **(a)** into rear wheel hub.

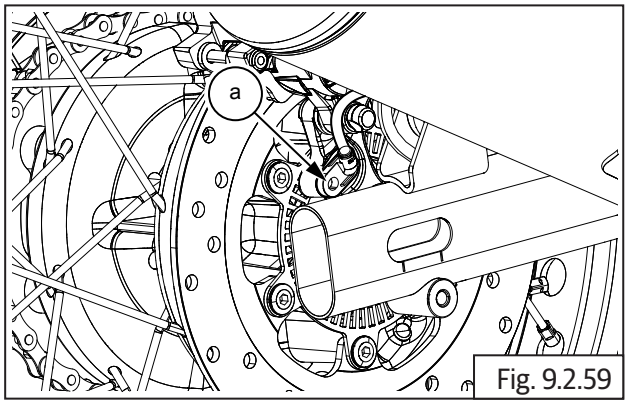

Fig. 9.2.59

- Locate and tighten Hex socket head screw **(M5)** **(a)** located below brake caliper on rear wheel RH.

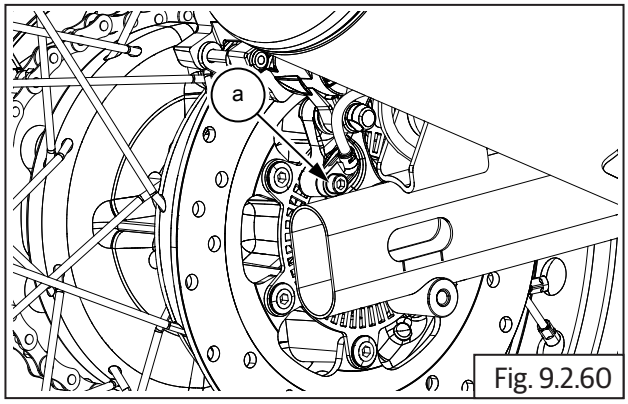

Fig. 9.2.60

	4 mm Allen socket with Ratchet

- Assemble swing arm bolt, spindle and chain adjuster assembly into rear wheel (section 6.8.8).

9.2.6. Master Cylinder Assembly - Rear

- Locate master cylinder bracket **(a)** over brake pedal **(b)**.

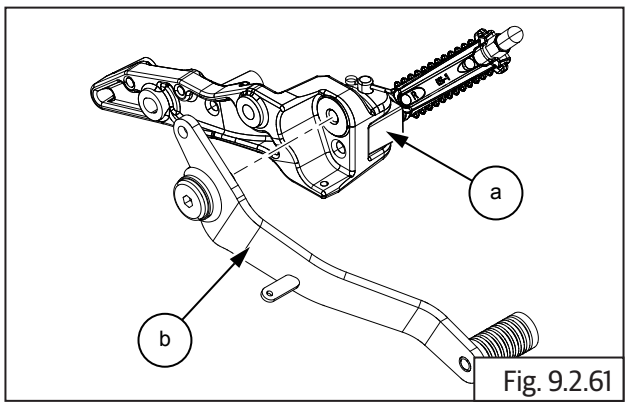

Fig. 9.2.61

- Insert and tighten Hex socket bolt **(M8) (a)** to fix master cylinder bracket on brake pedal **(b)**.

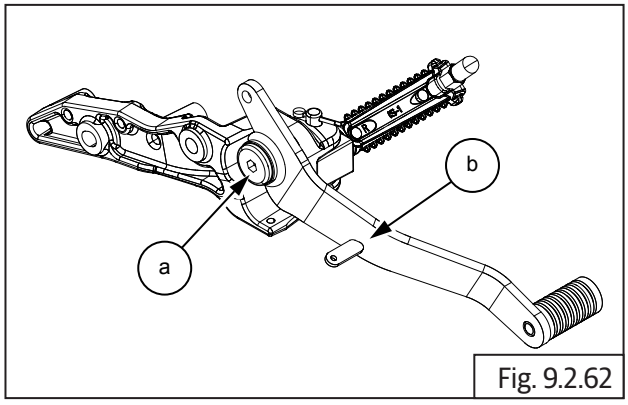

Fig. 9.2.62

	6 mm Allen socket with Ratchet
Torque	25 N-m/2.5 kgf-m

- Assemble master cylinder bracket **(a)** along with brake pedal **(b)** into motorcycle.

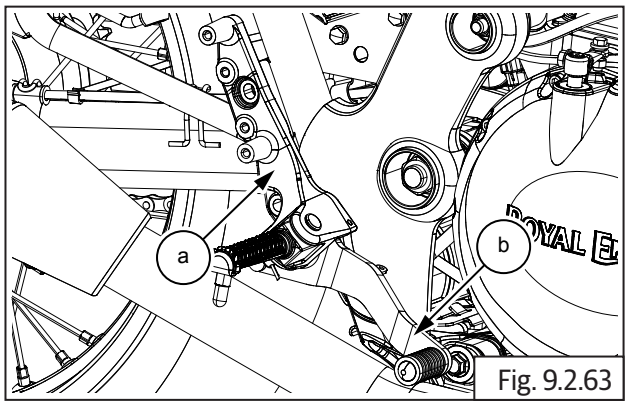

Fig. 9.2.63

- Insert and tighten 2 Nos. Hex socket bolts **(M6) (a)** to fix master cylinder bracket **(b)** into motorcycle.

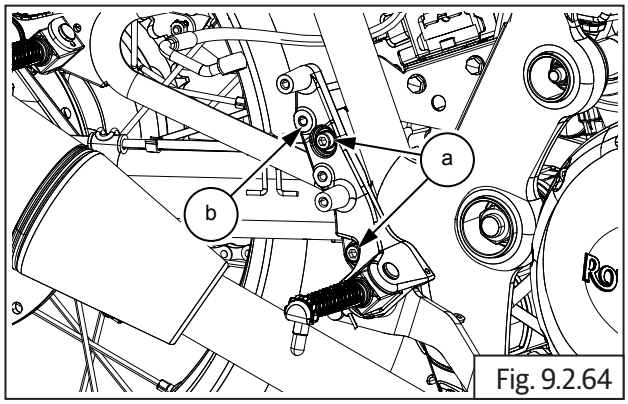

Fig. 9.2.64

	5 mm Allen socket with Ratchet
Torque	25 N-m/2.5 kgf-m

- Locate fluid reservoir on frame.
- Insert and tighten Hex socket bolt **(M6) (a)** to fix fluid reservoir **(b)**.

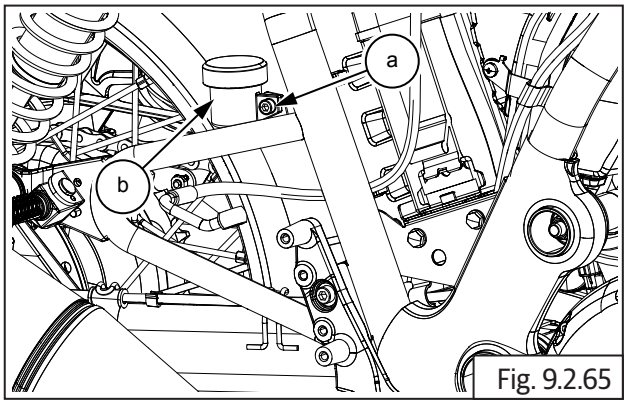

Fig. 9.2.65

	5 mm Allen socket with Ratchet
Torque	3 N-m/0.3 kgf-m

- Locate new O-ring inside the master cylinder bore.

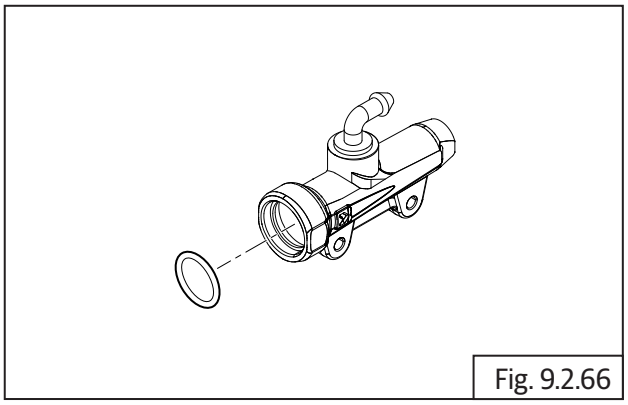
Fig. 9.2.66

⚠ CAUTION

DO NOT use any sharp tool to assemble the O ring or piston in the master cylinder.

- Assemble spring guide on the small end of spring.
- Locate peg on piston, on spring guide.
- Locate large bush over the piston.
- Insert large end of the spring along with the piston and guide bush into the master cylinder bore and hold it in compressed position inside master cylinder.
- Assemble Circlip **(a)** in the master cylinder body **(b)** and ensure it is locked properly in the groove.

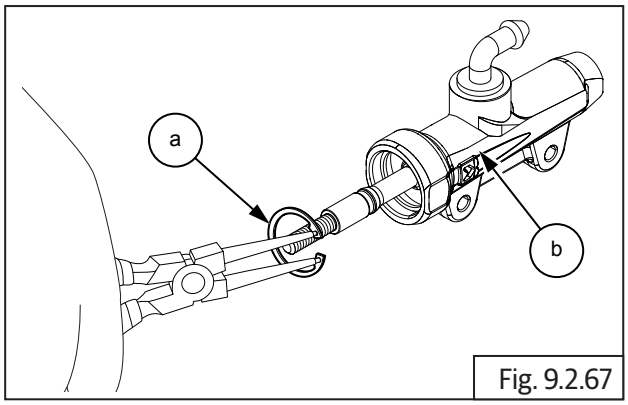

Fig. 9.2.67

	Circlip plier

- Assemble the protective rubber boot **(a)** on the master cylinder.

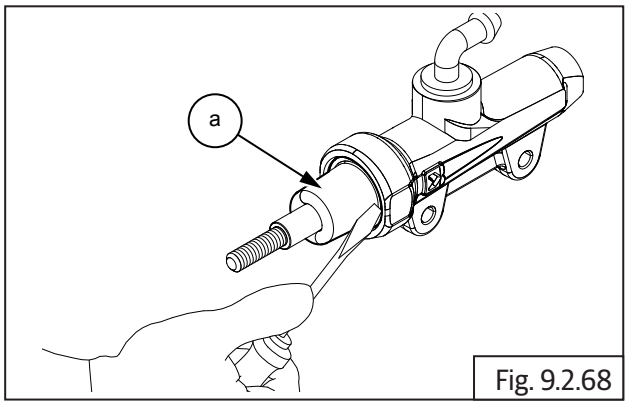

Fig. 9.2.68

	Screw driver

- Insert clevis pin **(a)** and washer **(b)** from bottom of master cylinder assembly **(c)**.

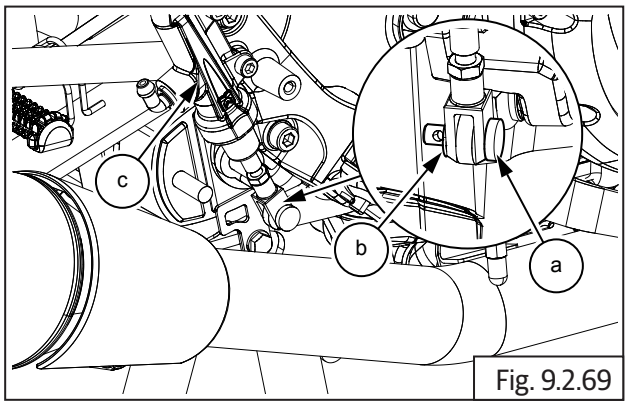

Fig. 9.2.69

	Nose plier

- Insert split pin **(a)** to clevis pin located at the bottom of master cylinder assembly then expand the split pin.

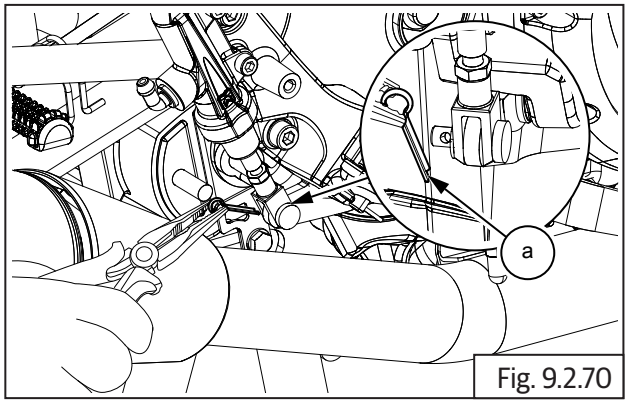

Fig. 9.2.70

	Nose plier

- Locate master cylinder assembly into master cylinder bracket.
- Insert and tighten 2 Nos. Hex socket bolts **(M6) (a)** to fix master cylinder assembly **(b)** into master cylinder bracket.

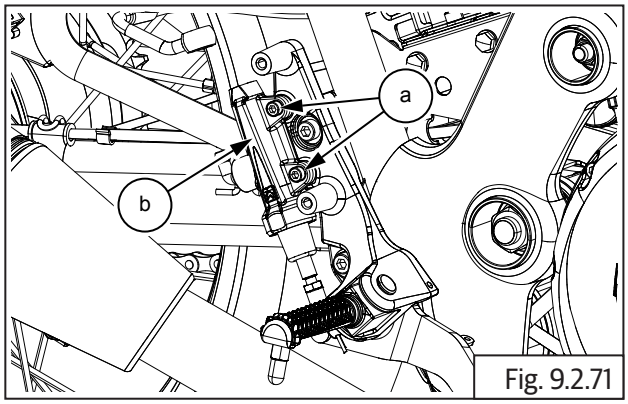

Fig. 9.2.71

	5 mm Allen socket with Ratchet
Torque	10 N-m/1 kgf-m

- Insert and tighten brake lamp switch nut **(M8) (a)** into master cylinder assembly.

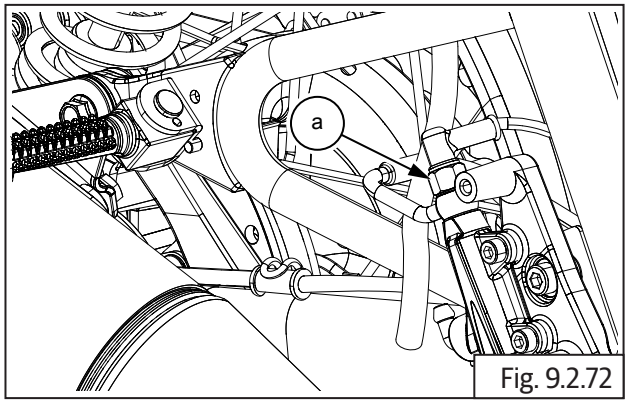

Fig. 9.2.72

	14 mm Double end spanner

- Assemble brake hose clip **(a)** into brake fluid reservoir **(b)** near master cylinder assembly **(c)**.

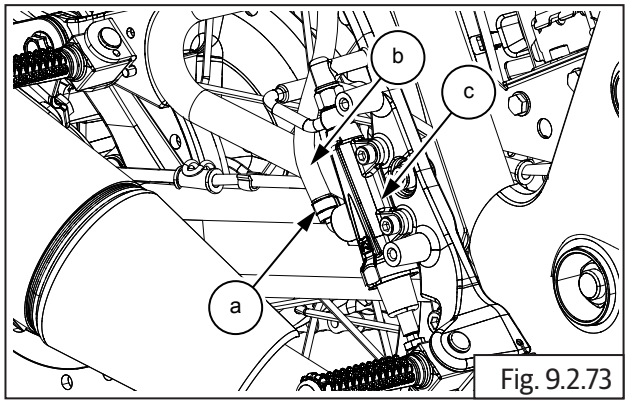

Fig. 9.2.73

- Assemble brake pedal spring **(a)** on brake pedal **(b)**.

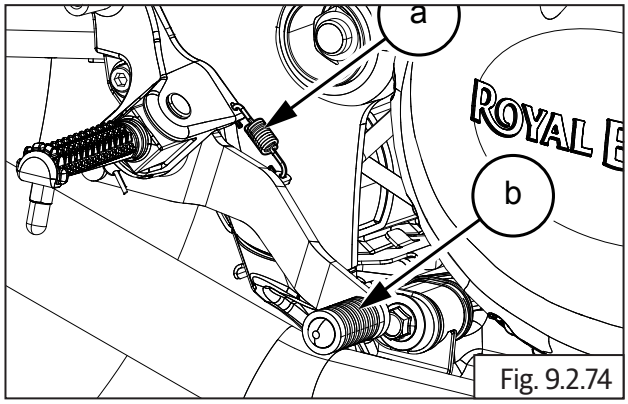

Fig. 9.2.74

	Nose plier

- Locate master cylinder guard **(a)** onto frame and insert and tighten 2 Nos. button socket head bolts **(M6) (b)**.

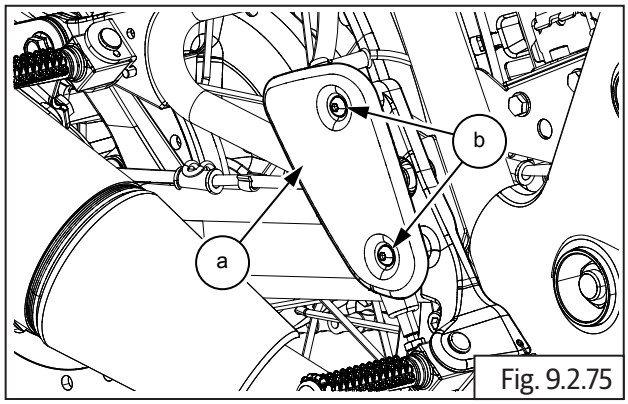

Fig. 9.2.75

	5 mm Allen socket with Ratchet
Torque	3 N-m/0.3 kgf-m

- Connect brake lamp coupler **(a)** to main wiring harness on motorcycle RH.

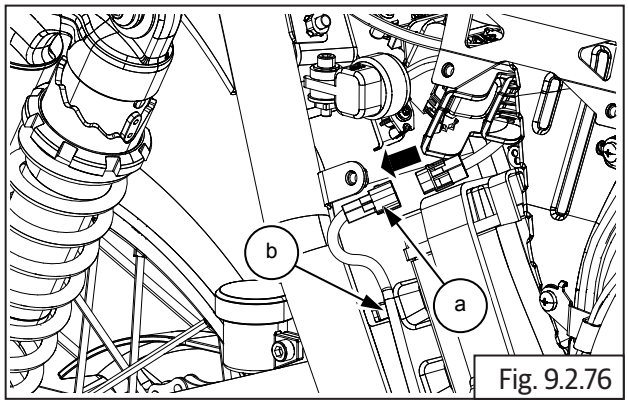

Fig. 9.2.76

Brake - Front

9.2.7. Brake Disc - Front

- Locate front brake disc **(a)** on front wheel hub and disc facing outward. Ensure six mounting holes are correctly aligned.

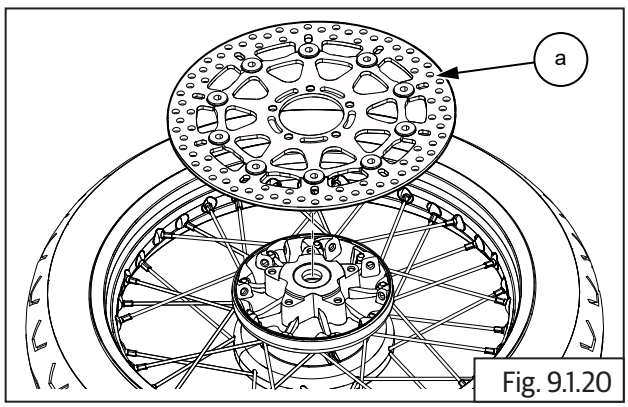

Fig. 9.1.20

- Position toner wheel **(a)** onto front disc and ensure mounting holes are correctly aligned.
- If bolts are pre-coated bolts replace with new ones.
- If they are non-coated, clean threads and wait for few minutes and apply thread sealant.

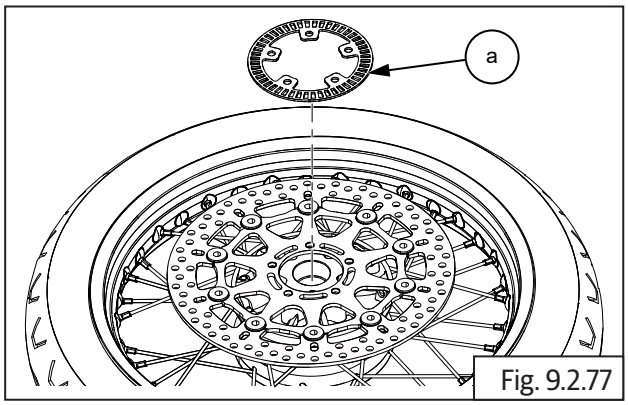

Fig. 9.2.77

- Insert 5 Nos. Hex socket head bolts **(M8) (a)** into brake disc LH and tighten in criss cross pattern to specified torque.

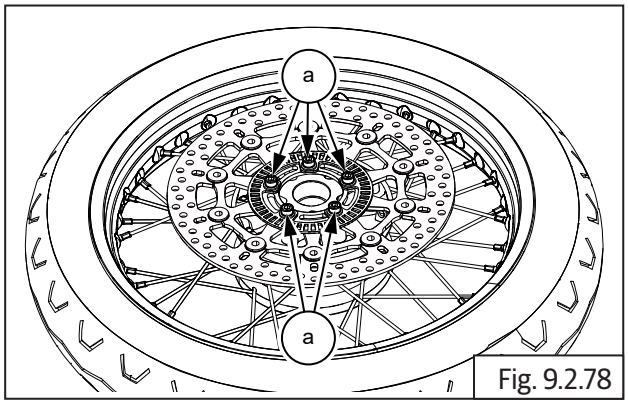

Fig. 9.2.78

	6 mm Allen socket with Ratchet
Torque	25 N-m/2.5 kgf-m

- Assemble front wheel into front fork assembly (section 6.8.13).

9.2.8. Brake Caliper - Front

- Coat fresh brake fluid on new dust seals and piston seals.
- Install piston seals in inner groove **(a)** and dust seals in outer groove **(b)** in the bore in caliper assembly.

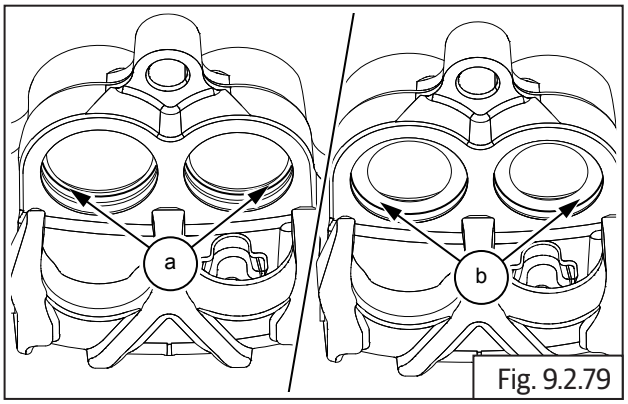

Fig. 9.2.79

- Coat the caliper cylinders and pistons with fresh brake fluid.
- Insert closed end of the pistons into caliper bores and gently press it into caliper fully till open ends of the piston **(a)** are flush with caliper bore outer edge.

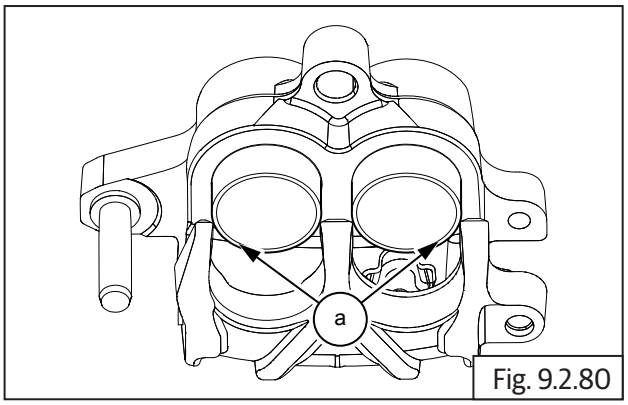

Fig. 9.2.80

NOTE
• *Do not apply force while assembling the pistons into the caliper. Press only with minimal hand pressure. Assemble pistons one at a time into the caliper.*

- Smear fresh brake fluid on the caliper boot and bellow and assemble them on the caliper body.

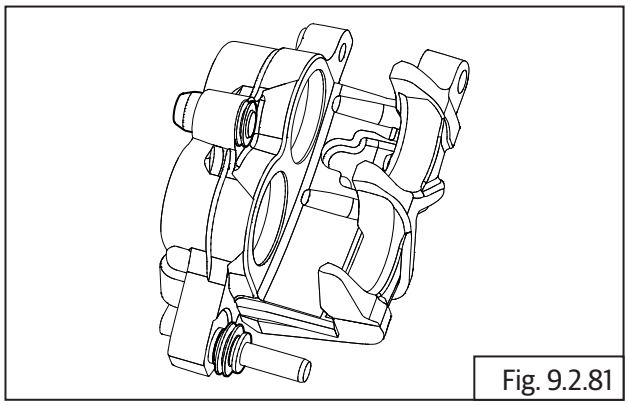

Fig. 9.2.81

- Install pad tension spring plate **(a)** in caliper body.

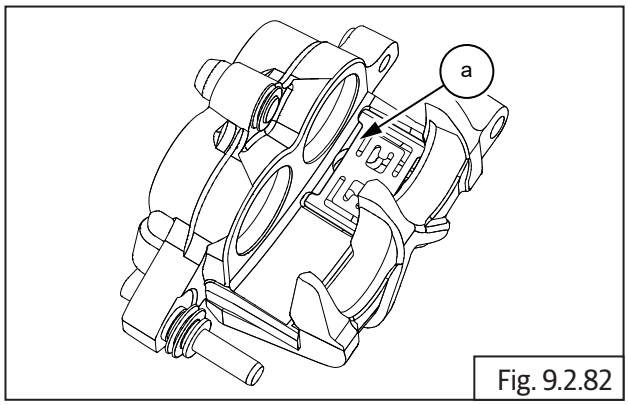

Fig. 9.2.82

- Assemble bleeder valve **(a)** with dust cap on the caliper body.

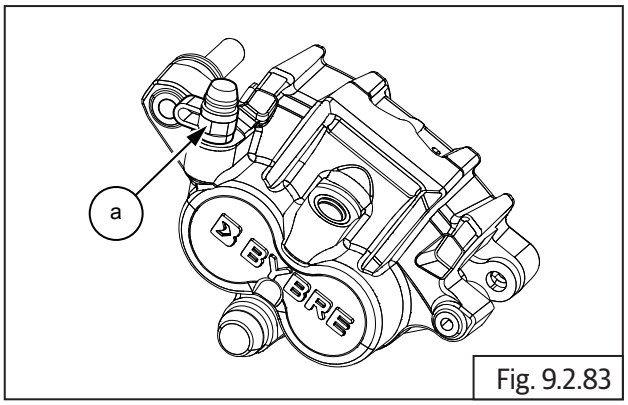

Fig. 9.2.83

- Assemble the mounting bracket **(a)** on caliper body **(b)**.

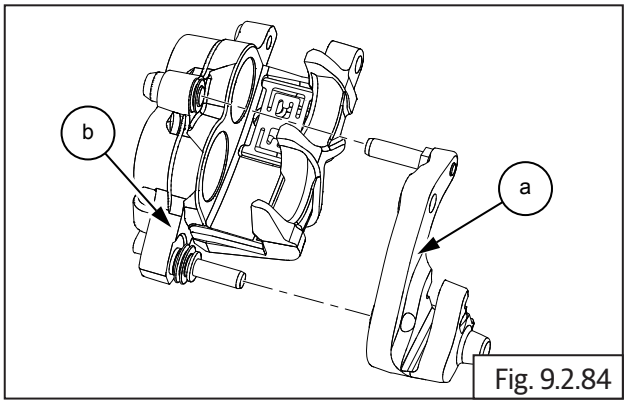

Fig. 9.2.84

- Slide in and assemble brake pads **(a)** into brake caliper **(b)**.

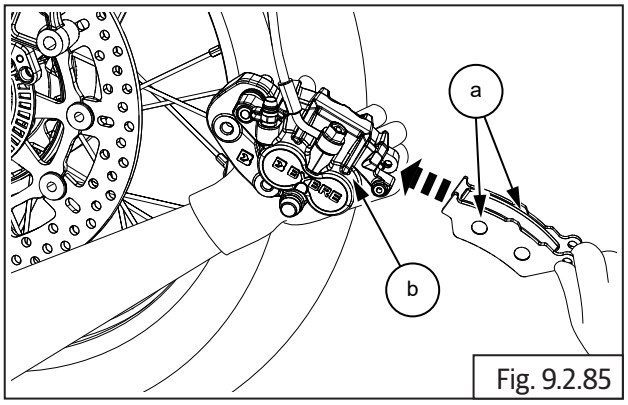

Fig. 9.2.85

- Lubricate and insert brake pad pin **(a)** into caliper.

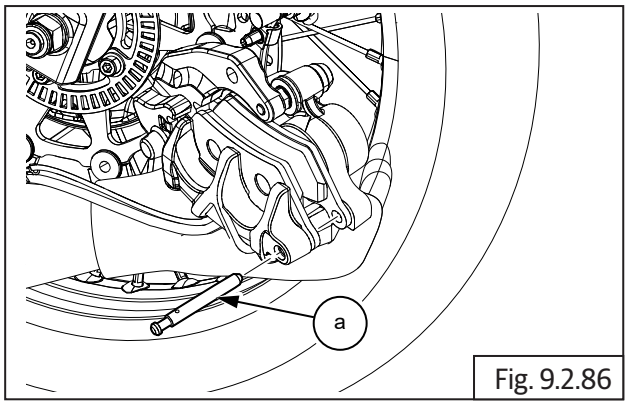

Fig. 9.2.86

- Suitably support caliper and correctly tap brake pad pin **(a)** from outside to inside.

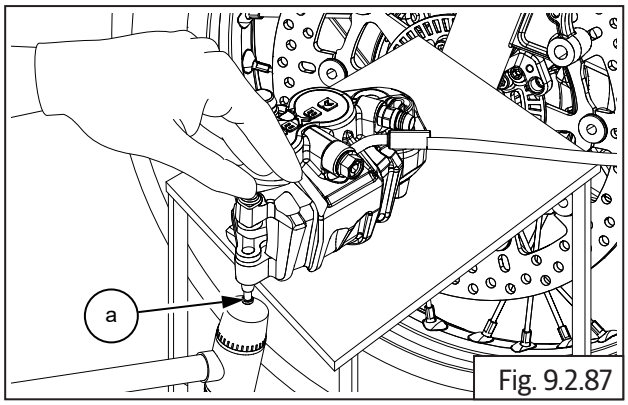

Fig. 9.2.87

	Pin punch and Mallet

- Assemble brake pad lock clip **(a)** into the brake pad pin **(b)**.

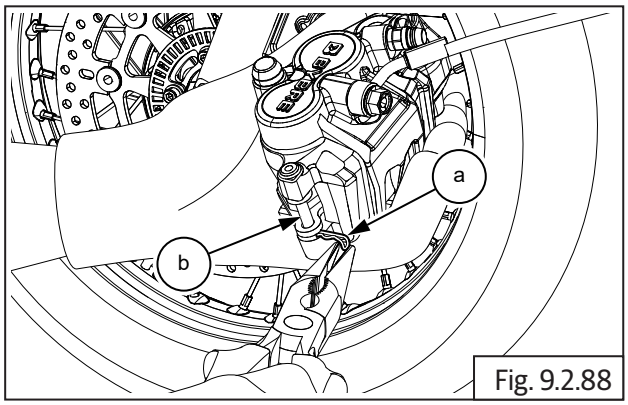

Fig. 9.2.88

	Nose plier

- Support and hold the front brake caliper assembly suitably onto the front LH fork.
- Locate and tighten upper and lower Hex flange head bolts **(M10) (a)** to fix front brake caliper assembly **(b)** to LH fork.

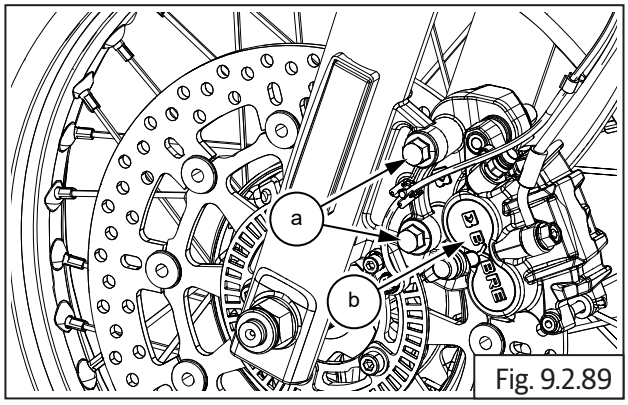

Fig. 9.2.89

	14 mm Socket with Ratchet
Torque	45 N-m/4.5 kgf-m

- Gently install hose into caliper assembly (section 9.3.10).

9.2.9. Master cylinder - Front

- Locate the conical spring **(a)** on the piston **(b)**.

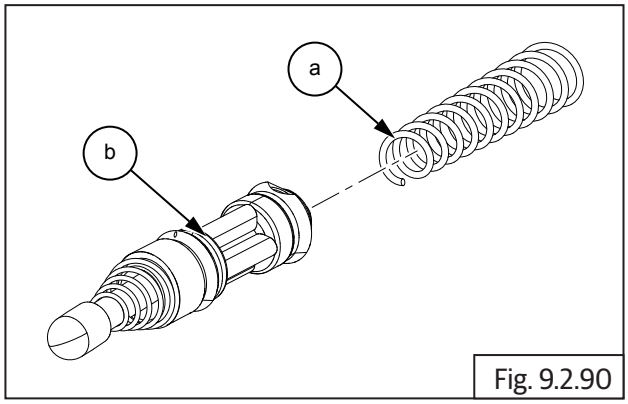

Fig. 9.2.90

- Smear piston seals and cylinder bore with fresh brake fluid and assemble piston **(a)** subassembly into master cylinder **(b)** by gently pushing it into the bore.

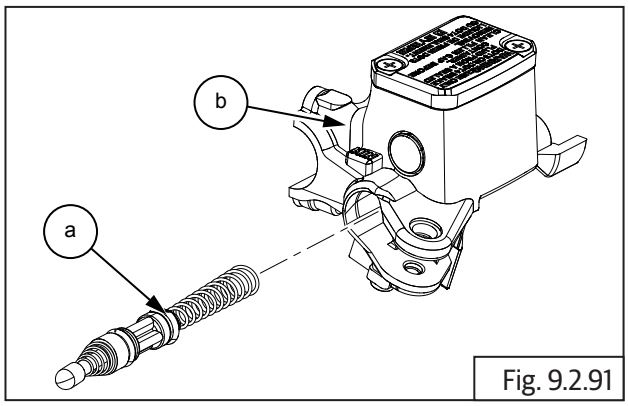

Fig. 9.2.91

- Compress and assemble circlip **(a)** into groove of master cylinder **(b)**.

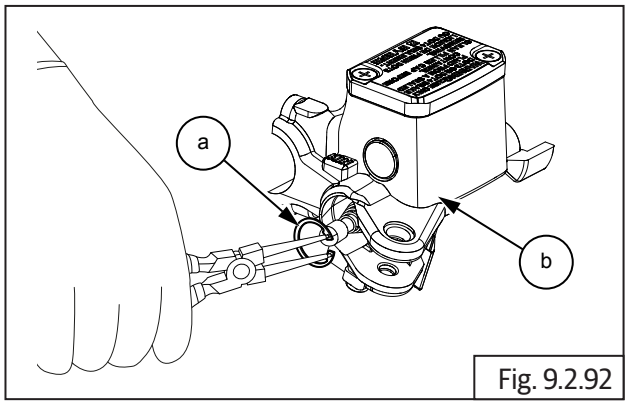

Fig. 9.2.92

⚠ CAUTION

DO NOT use tools with sharp ends.

Ensure circlip is locked properly after assemble.

- Assemble the rubber Boot.

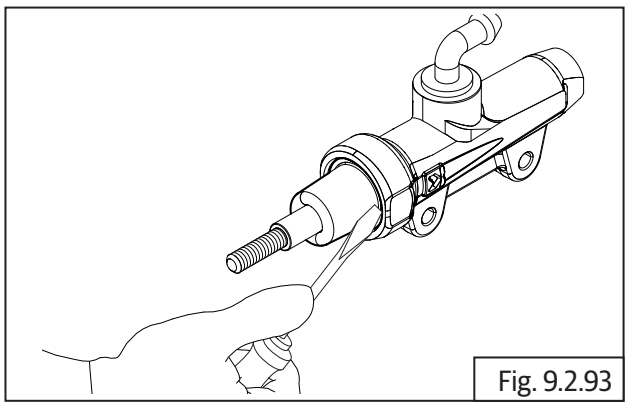
Fig. 9.2.93

- Apply silicon grease on the lever pivot hole and on the Piston surface.
- Position brake lever inside the bracket, locate pivot screw from the top and tighten to bracket.
- Assemble lock nut below and tighten.

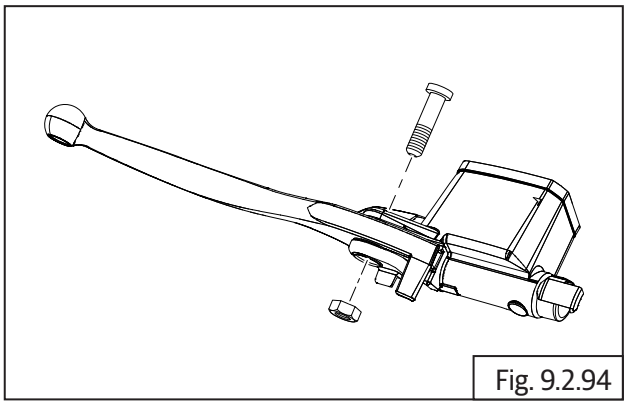
Fig. 9.2.94

- Assemble the Brake Switch on the bracket.

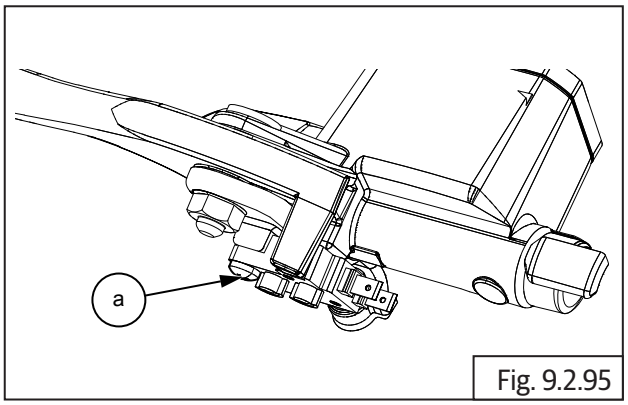

Fig. 9.2.95

- Locate master cylinder assembly on handlebar RH and locate clamp over cylinder.
- Locate and tighten 2 Nos. Hex flange head bolt **(M5) (a)** into clamp and fix the master cylinder assembly.

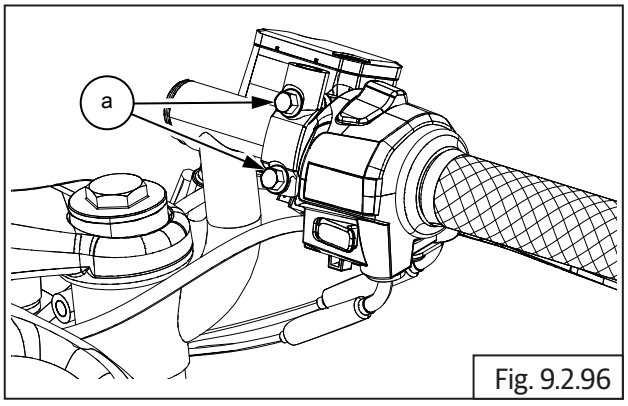

Fig. 9.2.96

	8 mm Socket with Ratchet

- Refill fluid, inspect and diagnose if there are any leakages (section 9.8).

9.3 Anti-lock Braking System (ABS)

Working Principle

The Royal Enfield Continental GT 650 twin and Interceptor 650 twin motorcycles are equipped with the state of the art Anti-Lock Braking System (ABS).

The ABS is a safety system which constantly receives inputs about the speed of rotation of the front and rear wheels on a real time basis and modulates the braking force for each wheel when brakes are applied by the rider. This helps prevent the brakes from locking the wheels, especially when brakes are applied suddenly, the wheels have a better traction with the road surface.

The benefits of ABS:

- Increased braking efficiency and riding confidence when braking.
- Prevent wheel lock up when brakes are applied suddenly with great force thereby ensuring good traction of the front and rear wheels with the road surface.

Typical Motorcycle Braking Distance

(Average driver starting speed 100 Kmph)

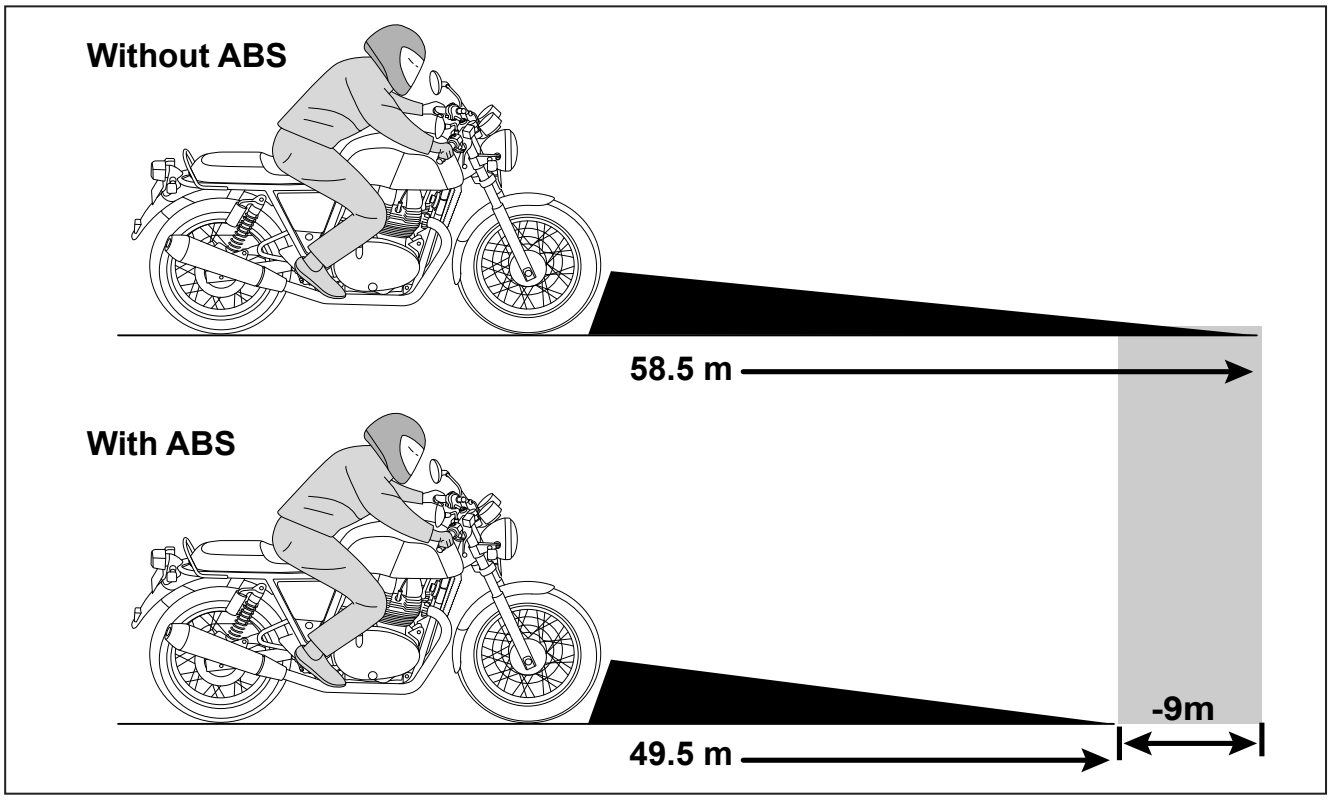

The ABS consists of an Electronic Control Unit (ECU), modulator, toner rings and wheel speed sensors.

The ECU constantly receives inputs on the speed of rotation of the front and rear wheels through the wheel speed sensors. When the rider applies either the front or rear brakes or both brakes, the speed sensors provide data on the rate of deceleration of the wheels to the ECU which then commands the valves in the modulator to progressively regulate the hydraulic fluid pressure on a real time basis so that the brake pads do not "lock" on the brake disc which can potentially cause the wheels to lock.

Whenever front and/or rear brakes are applied with great force/suddenly, the braking management system gets input of the wheels speed through a wheel speed sensor and commands the modulator in the braking system to modulate the hydraulic fluid force such that the brake pads do not lock on the brake disc which effectively from locking and provide better traction to prevent the motor cycle from shifting and/or loss of control.

In the ABS, during application of brakes, a pulsating sensation will be felt on the brake lever/pedal indicating that the ABS is working correctly.

⚠ WARNING

The ABS will by no means prevent an accident and/or loss of control. It is the responsibility of the rider to anticipate and judge the braking distances required, depending on the speed at which the motorcycle is traveling and apply brakes sufficiently in advance to prevent an accident and/or loss of control.

While ABS assists in improved motorcycle control during braking, decreased stopping distances on dry and good road conditions, it cannot be assumed that it will be effective in wet, rainy, snow covered, off road conditions, loose gravel surfaces or hilly roads etc, as the traction of the wheel itself will be very minimal in these conditions.

As far as possible, whenever applying sudden brakes in emergency in wet conditions, please ensure the motorcycle is upright in steady riding position and the handlebars are straight. Avoid hard braking when banking heavily at great speeds.

Whenever brakes are applied, a pulsating sensation will be felt on the brake lever/pedal. This is characteristic to the ABS and quite normal, as the modulator in the ABS constantly modulates the hydraulic pressure in the braking system in relation to the force applied on the brake lever/pedal and the speed of the motorcycle.

Whenever bleeding the hydraulic system, it is highly recommended to bleed both the front and rear brakes for proper functioning of the ABS. Do not restrict to bleeding any one brake system as it may render the ABS non-functional, in case the other brake has air bubbles in its system.

Functions and Specifications of the ABS Aggregates

As soon as the ignition and engine stop switch are switched ON, the ABS sign will light up. The lamp will remain ON till the motorcycle attains a speed of 5 Kmph (3MPH) and then switches OFF. This indicates that the ABS is working properly.

In the event the lamp does not switch OFF and remains continuously ON at higher speeds, it is recommended not to drive the motorcycle and get the brake system inspected and corrected through a nearest authorized Royal Enfield Dealer / Distributor.

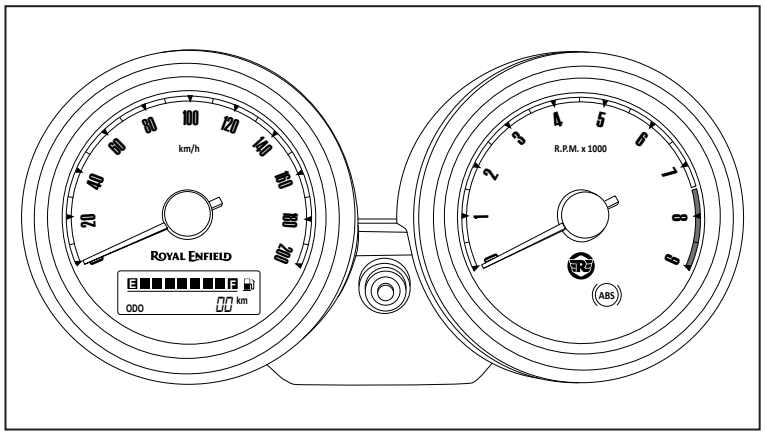

1. Electronic Control Unit (ECU)

The ECU is located in the bracket alongside of the modulator, on the frame, below the fuel tank.

It consists of a microprocessor, which receives inputs from the wheel speed sensors, interprets the data, determines the safe hydraulic pressure in relation to the speed of the wheels and commands the valves in the modulator to progressively regulate the hydraulic fluid pressure on a real time basis for efficient and safe braking.

Specifications:

Operating Voltage:	09 V to 16 V
Operating Temperature:	-40ºC to 70ºC

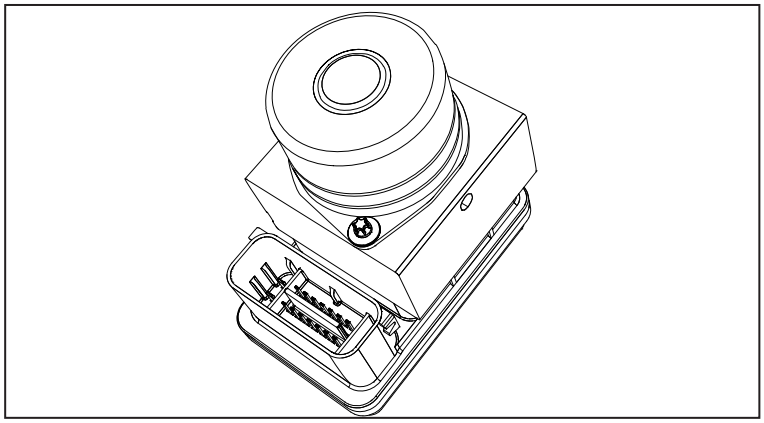

The ECU also records and stores data on the performance of the ABS on a real-time basis. This will help in diagnosing any braking related disorders, whenever the Royal Enfield NACS II diagnostic tool is connected to the socket in the wiring harness of the motorcycle.

The history stored in the ECU can also be saved to an external computer for future reference and also erased from the ECU, using the Royal Enfield NACS II diagnostic tool.

2. Modulator

The modulator is located on the frame below the fuel tank. The brake hoses from the master cylinders and brake calipers are connected to the modulator.

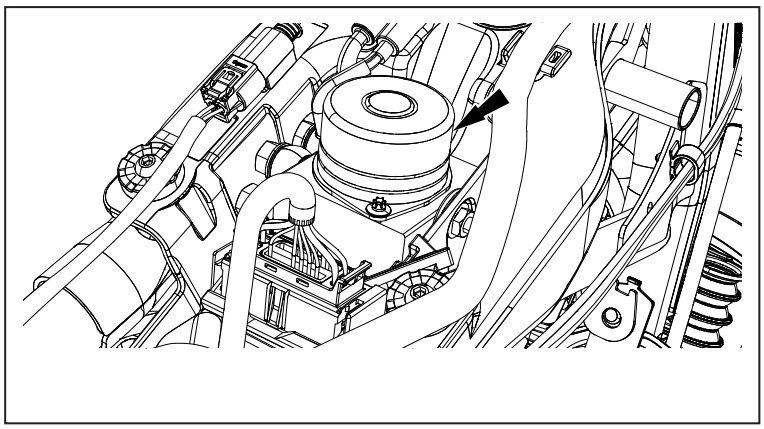

Whenever brakes are applied, the valves inside the modulator are progressively activated by the ECU to regulate the hydraulic fluid pressure in the brake system. This in turn will modulate the movement of the pistons inside the brake calipers to prevent the brake pads from locking on the brake discs.

3. Wheel Speed Sensors, Front and Rear

There are 2 wheel speed sensors provided in the motorcycle. The front speed sensor is assembled on the fork end LH and the rear speed sensor is assembled on the rear wheel caliper bracket.

Specifications:

Operating Voltage: 08 V to 16 V

Operating Temperature: -40º C to 70º C

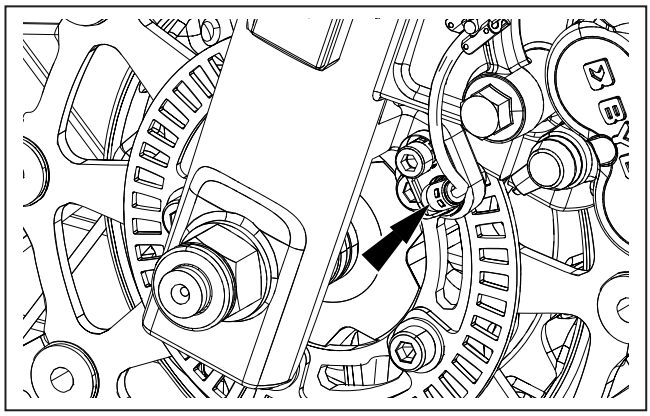

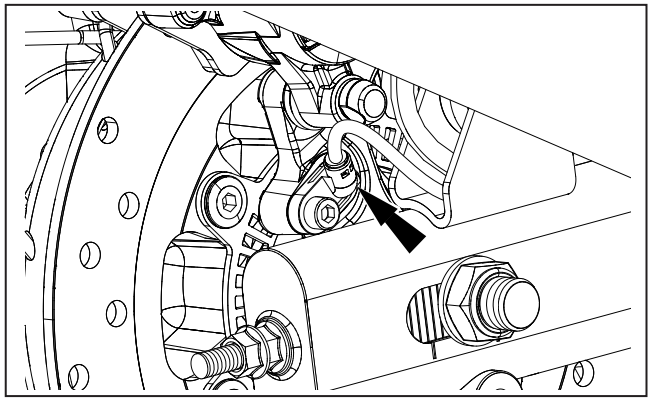

These sensors provide the inputs to the ECU about the speed of rotation of the wheels.

4. Toner Rings, Front and Rear

The toner rings are assembled on the front and rear brake hubs inside the brake discs.

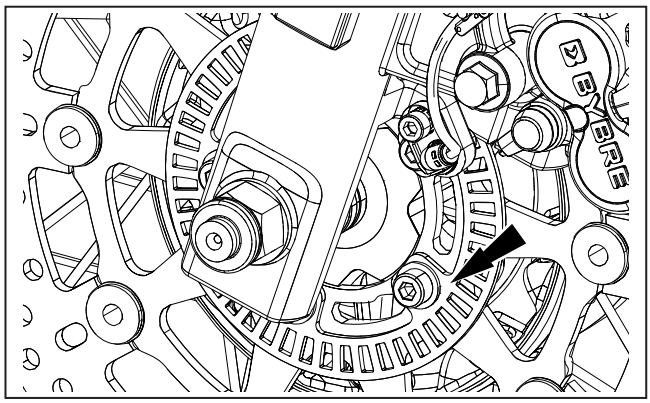

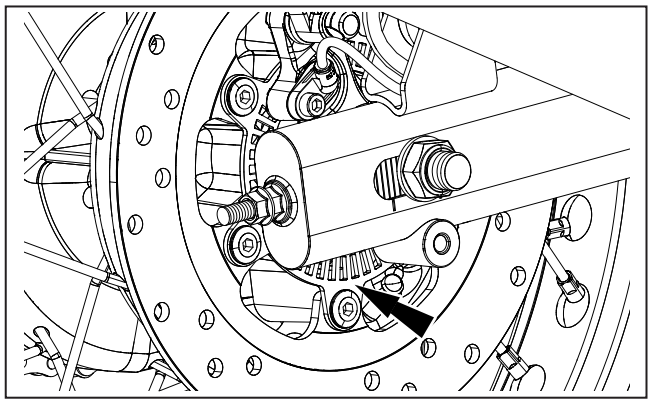

The toner rings assists the wheel speed sensors to assess the speed of rotation of the wheels.

5. Master Cylinders, Front and Rear

The front brake master cylinder is assembled on the handlebar RH and activated by the front brake lever.

The rear brake master cylinder is assembled on the frame RH side and activated by the brake pedal

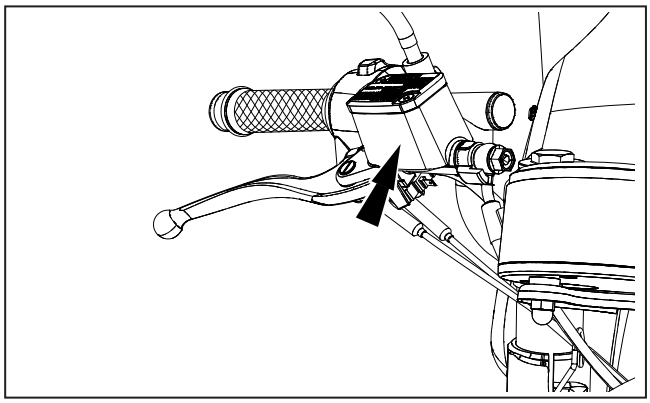

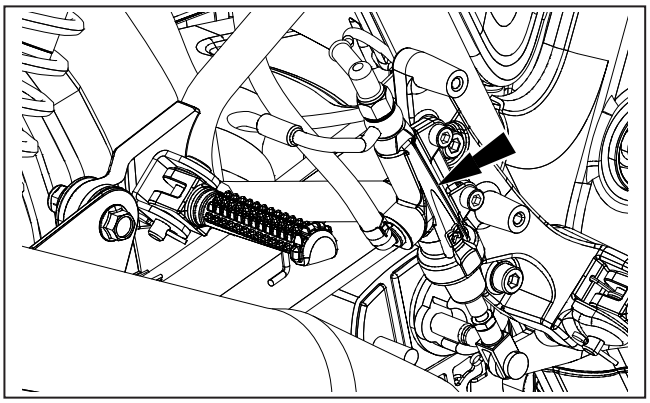

Whenever the front brake lever/rear brake pedal are activated, the piston inside the master cylinder applies force on the brake fluid to activate the brakes.

The master cylinders are connected to the modulator through brake hoses to transmit the applied hydraulic fluid pressure from the master cylinders.

6. Wheel Calipers - Front and Rear

The front wheel caliper is assembled on the fork end LH and the rear wheel caliper is located on the rear swing arm RH. The wheel calipers consist of pistons and brake pads.

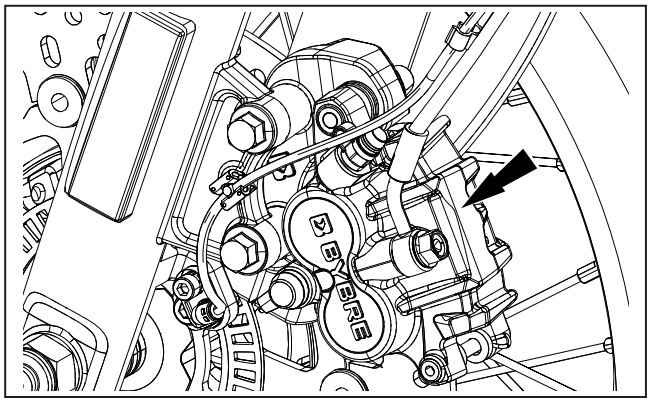

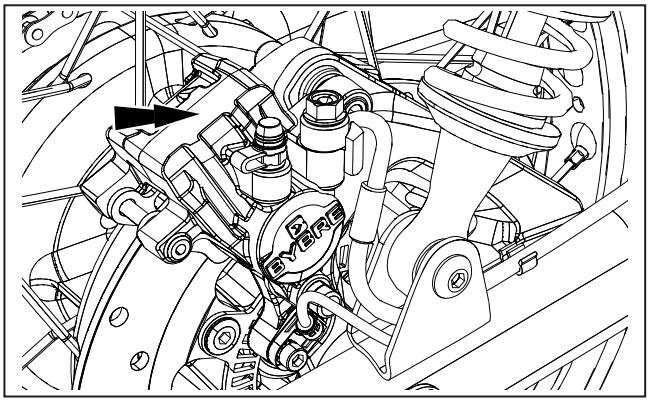

When brakes are applied, the hydraulic fluid force in the braking system causes the pistons to move, and pushes the brake pads against the brake discs on the wheels for braking.

The wheel calipers are connected to the modulator which modulate the hydraulic fluid force to be applied against the pistons.

Do's and Don'ts for ABS

- **Use only approved Brake fluid recommended by Royal Enfield. (DOT4)**
- **Whenever the modulator is removed from the motorcycle, please ensure it is stored upright with the ports facing upwards.**
- **Whenever the modulator is removed from the motorcycle for any reason, please ensure the front and rear brake system bleeding is carefully done and no air is trapped in the brake system.**
- **DO NOT interchange ABS unit/ECU from one motorcycle to another.**
- **DO NOT interchange the brake hose connections between master cylinders and wheel cylinders and also front and rear circuit, at the modulator end.**
- **The shelf life of a wet modulator unit is 5 years from the date of manufacture.**

Dismantling

9.3.1. Modulator

⚠ CAUTION

Before dismantling the modulator, ensure ignition switch and engine stop switch are in OFF position.

Ensure the hydraulic brake fluid from the front and rear brakes is drained completely.

- **Remove the following parts:**
  - Side panel RH (section 6.7.1).
  - Rider seat (section 6.7.2).
  - Fuel tank assembly (section 7.1.15).

⚠ CAUTION

Ensure the following:

Fuel is drained completely from fuel tank.

Fuel feed and return hoses are disconnected from the fuel rail.

Wiring couplers to fuel pump and low fuel sensors are disconnected.

EVAP hose pipes are disconnected.

⚠ WARNING

Gasoline is extremely flammable and highly explosive. Improper handling can lead to fatal accident or serious injury.

- Bleed out the brake fluid from the front brake system (section 9.4).

⚠ CAUTION

Do not spill brake fluid on any part of the motorcycle as it will damage the painted/ plastic surfaces.

⚠ WARNING

Ensure brake fluid does not get in contact with eyes and skin. In-case of exposure wash affected area thoroughly with water. Seek medical attention immediately if any irritation persists.

Keep out of reach of children.

Dispose drained brake fluid carefully and responsibly.

- Loosen and remove banjo bolt **(a)** and disconnect hose **(b)** from front caliper on front fork LH.

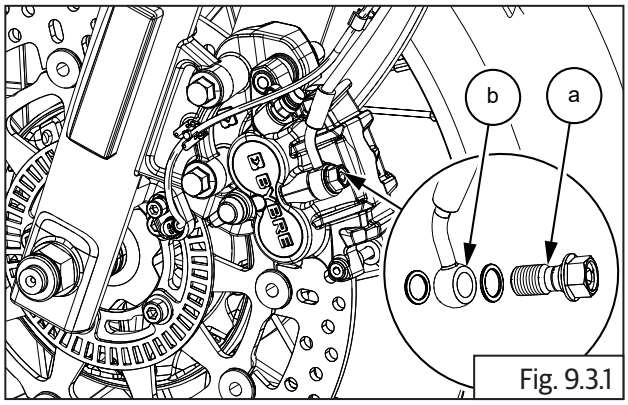

Fig. 9.3.1

	12 mm Ring spanner

- Loosen and remove banjo bolt **(a)** and disconnect hose **(b)** from front master cylinder on handlebar RH.

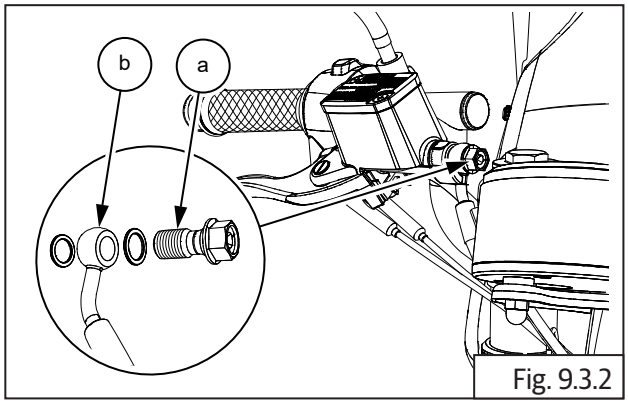

Fig. 9.3.2

	12 mm Ring spanner

- Loosen and remove banjo bolt **(a)** and disconnect hose **(b)** from rear caliper from rear wheel RH.

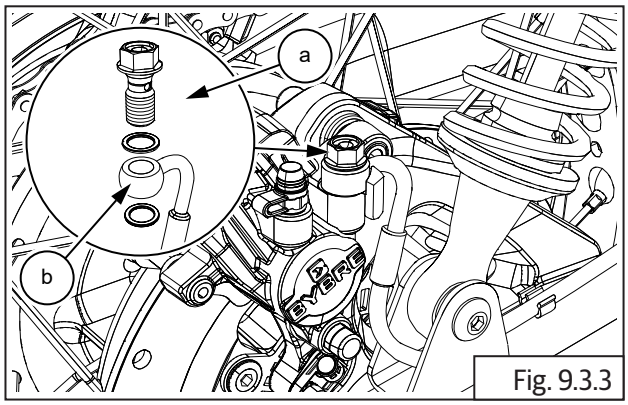

Fig. 9.3.3

	12 mm Ring spanner

- Loosen and remove banjo bolt **(a)** and disconnect hose **(b)** from rear master cylinder assembly.

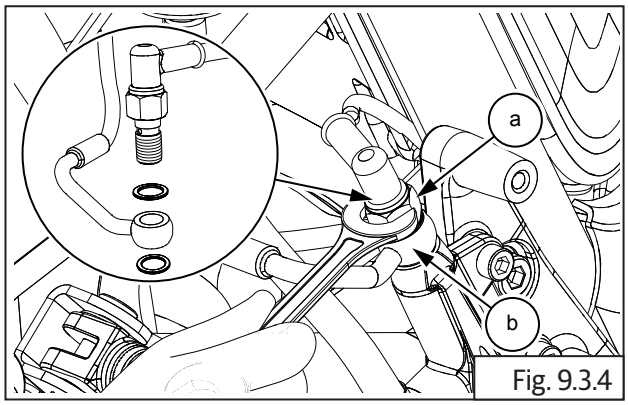

Fig. 9.3.4

	12 mm Ring spanner

- Remove brake hose mounting clamps front **(a)** from frame.

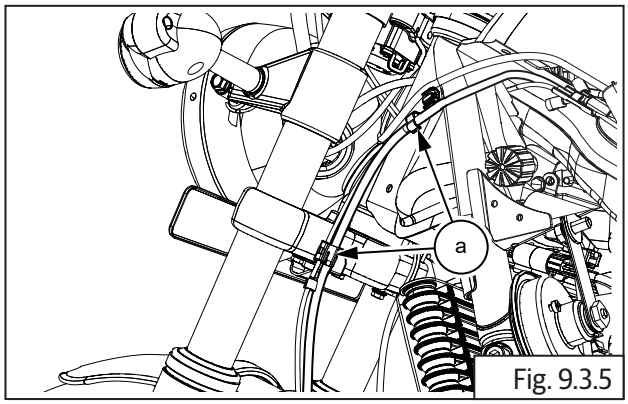

Fig. 9.3.5

- Remove brake hose mounting clamp rear **(a)** from air filter box RH.

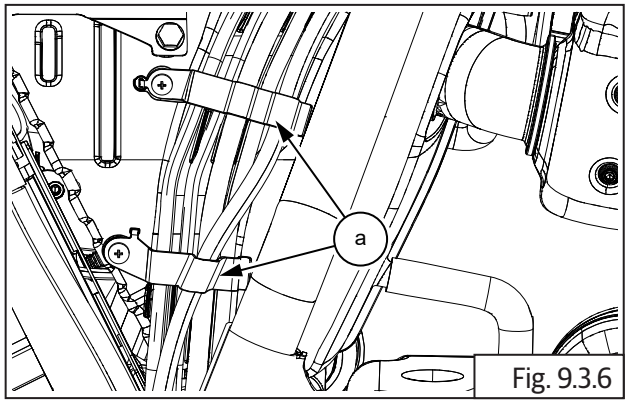

Fig. 9.3.6

- Disconnect holding straps **(a)** of the brake hoses to the frame/fork end/swing arm.

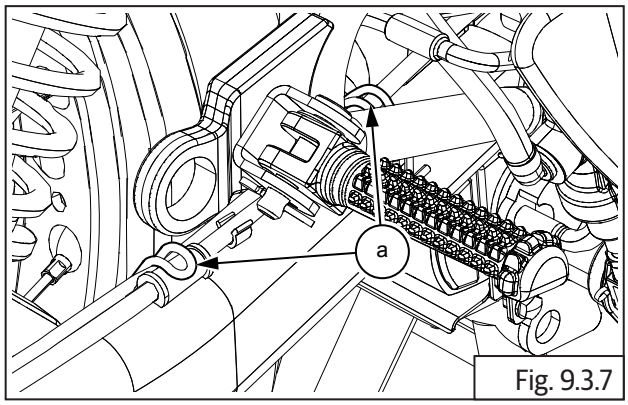

Fig. 9.3.7

- Disconnect ABS modulator electrical connector **(a)** from ECU.

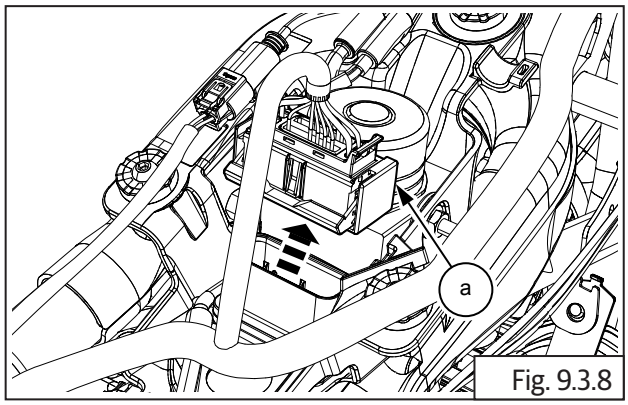

Fig. 9.3.8

- Remove strap holding main harness **(a)** to ABS housing bracket and move harness away from the bracket.

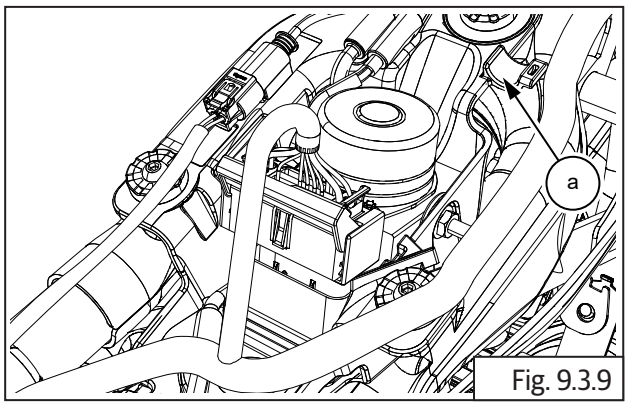

Fig. 9.3.9

- Disconnect front wheel speed sensor wiring connector **(a)** from harness.

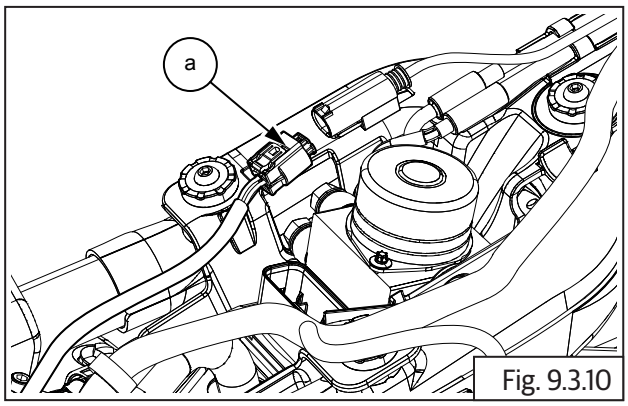

Fig. 9.3.10

- Disconnect MAP sensor connection and loosen and remove MAP sensor mounting bolt **(a)** from modulator bracket (section 10.1.3).

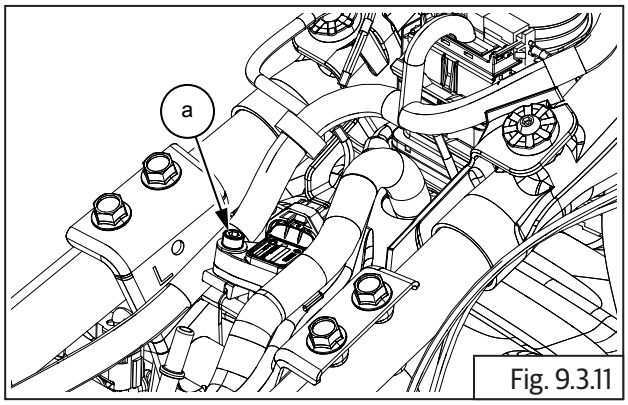

Fig. 9.3.11

- Loosen and remove 3 Nos. mushroom head screws **(M6) (a)** holding ABS modulator mounting bracket from frame.
- Ensure all 4 Nos. brake hoses are free to be removed along with modulator from frame.

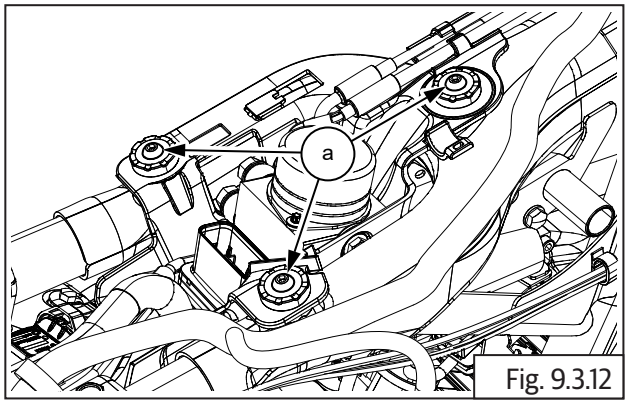

Fig. 9.3.12

	5 mm Allen socket with Ratchet

- Gently pull out modulator **(a)** along with bracket and 4 Nos. hoses from frame and remove.

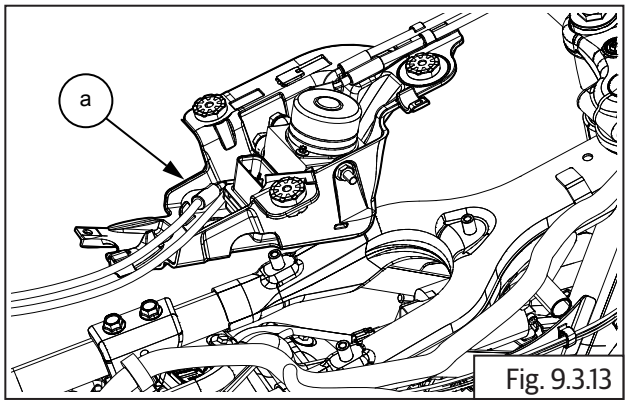

Fig. 9.3.13

- Loosen and remove hex bolt **(M6) (a)** at the rear side of the bracket **(b)**.

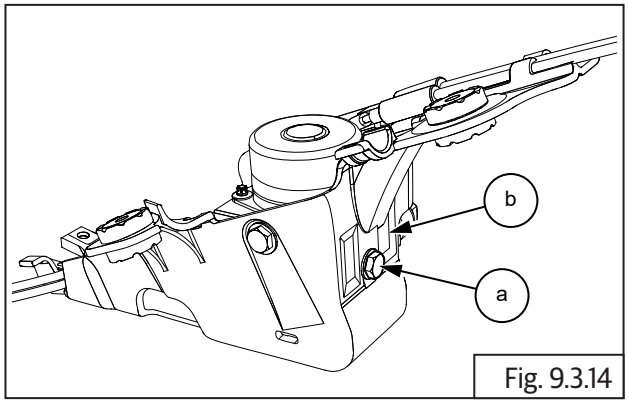

Fig. 9.3.14

	10 mm Socket with Ratchet

- Loosen and remove hex bolt **(M6) (a)** at the LH side of bracket **(b)**.

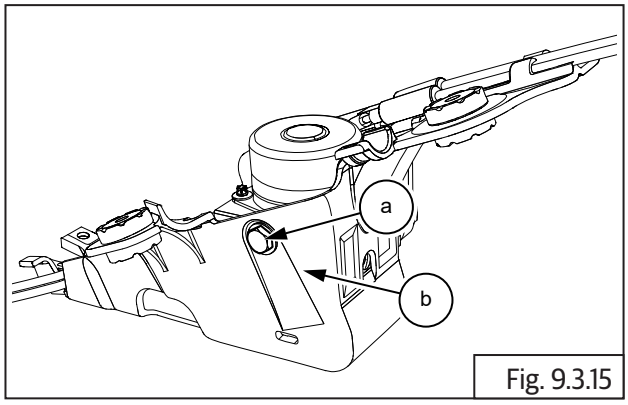

Fig. 9.3.15

	10 mm Socket with Ratchet

- Separate the ABS modulator **(a)** from bracket **(b)** and remove along with the 4 Nos. brake hoses.

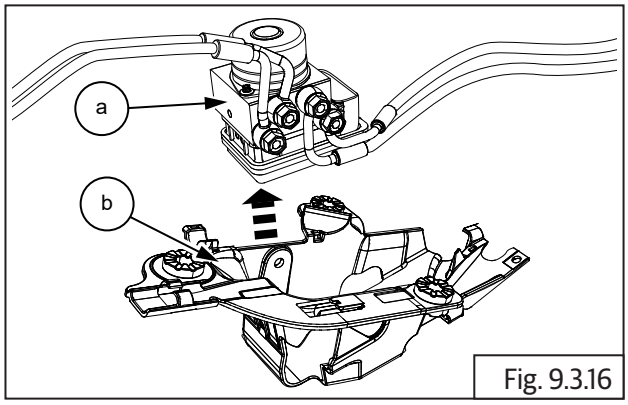

Fig. 9.3.16

- Brake hose color tags:
  - a) BLUE - Front Master Cylinder Assembly
  - b) GREEN - Front Brake Caliper
  - c) RED - Rear Brake Caliper
  - d) YELLOW - Rear Master Cylinder Assembly

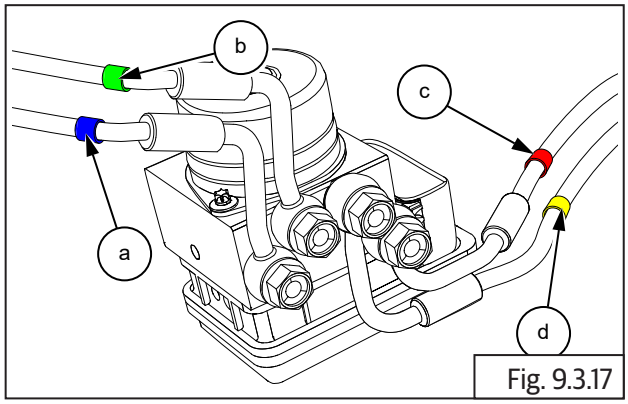

Fig. 9.3.17

- Reference mark to be created during dismantling for ease of assembly.

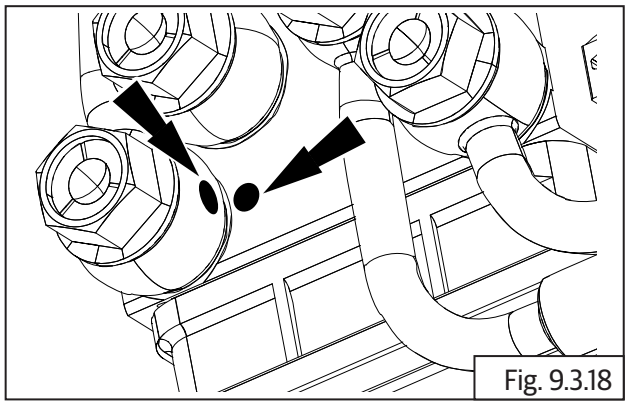
Fig. 9.3.18

- Repeat the above process to other brake hoses.
- Support modulator suitably on a work table, loosen and remove 4 Nos. banjo bolts **(a)** along with washers from modulator to remove brake hoses **(b)**.
- Remove 4 Nos. brake hoses from modulator.

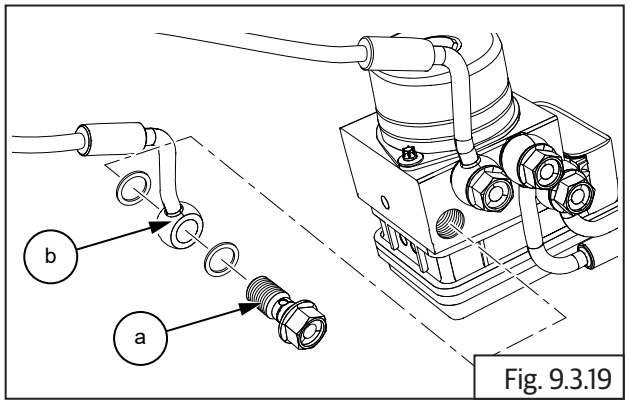

Fig. 9.3.19

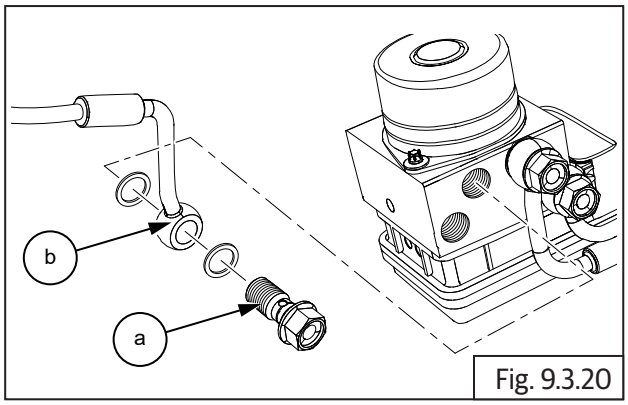

Fig. 9.3.20

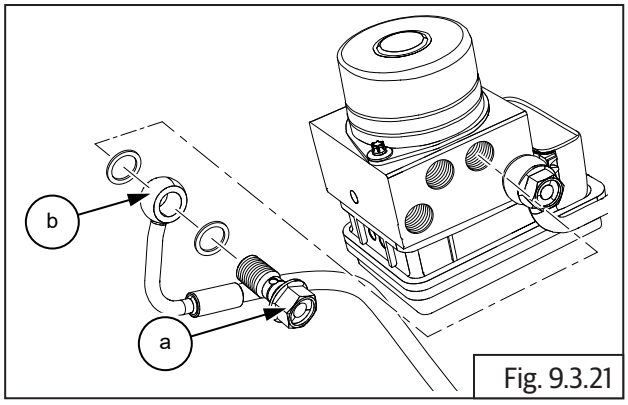

Fig. 9.3.21

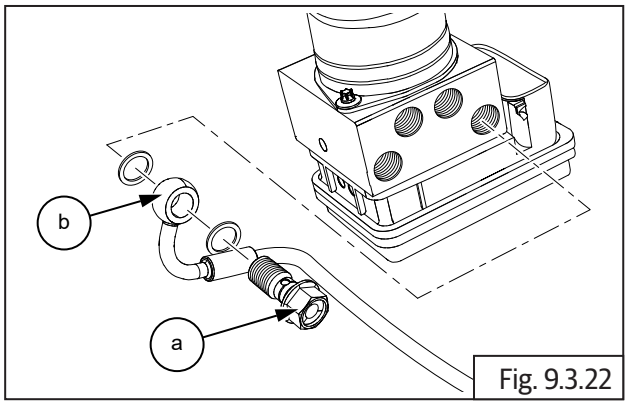

Fig. 9.3.22

Do's & Don'ts

- **DO NOT interchange ABS unit/ECU from one motorcycle to another.**
- **Whenever the modulator is removed from the motorcycle, please ensure it is stored upright with the ports facing upwards.**
- **Store the ECU in a cool and dry place.**
- **Store the ECU away from any magnetic forces as it will affect the ECU program software and damage the ECU.**
- **DO NOT allow moisture to affect ECU.**.

9.3.2. Wheel Speed Sensor - Front

- Ensure Ignition switch and Engine stop switch are in OFF position.
- Release sensor coupler wire from the brake hose clip on fork end LH and from the bracket on the frame.

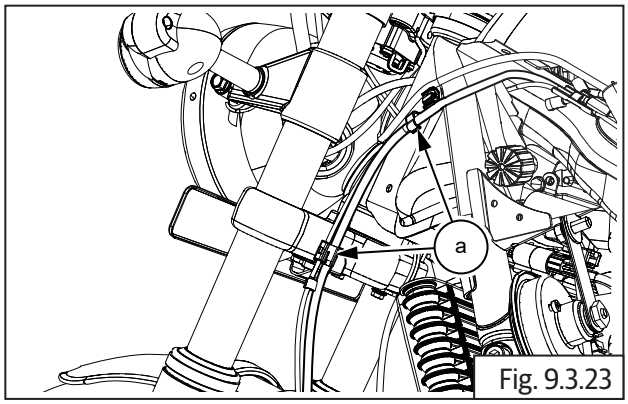

Fig. 9.3.23

- Disconnect sensor coupler **(a)** from harness near ABS modulator bracket.

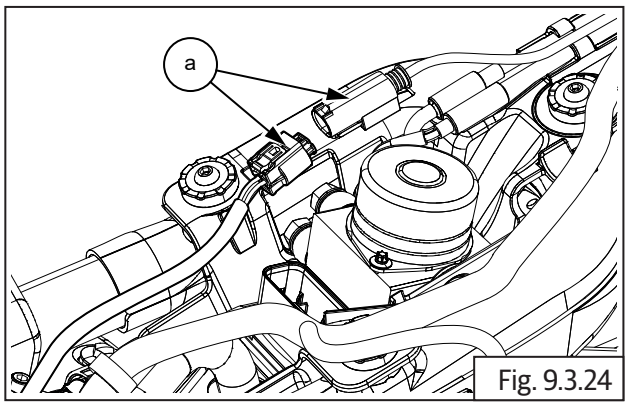

Fig. 9.3.24

- Remove sensor coupler wire from clip on fork end LH.

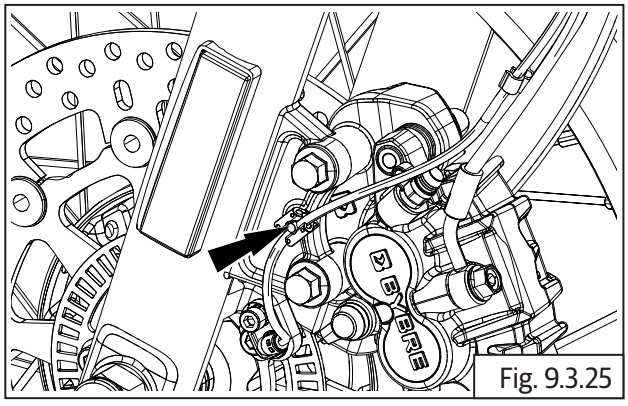
Fig. 9.3.25

- Loosen and remove hex socket head bolt **(M6) (a)** holding sensor **(b)** to fork end LH.
- Gently pull out sensor from fork end LH.

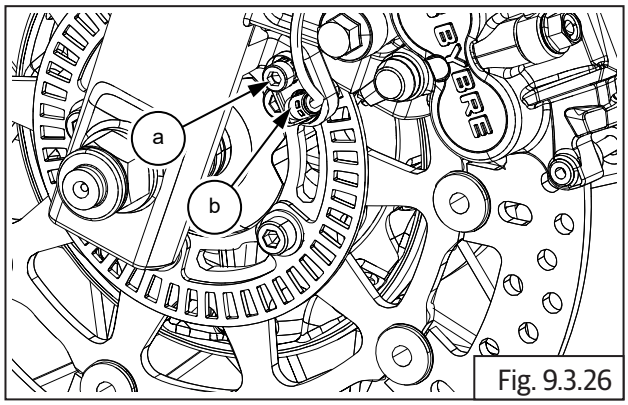

Fig. 9.3.26

	5 mm Allen socket with Ratchet

9.3.3. Wheel Speed Sensor - Rear

- Ensure Ignition switch and Engine stop switch are in OFF position.
- Remove the following parts:
  - Side panel RH (section 6.7.1).
  - Rider seat (section 6.7.2).
  - Disconnect battery terminals and remove battery from battery carrier (section 11.5.1).
- Disconnect sensor coupler **(a)** from harness near rollover sensor.

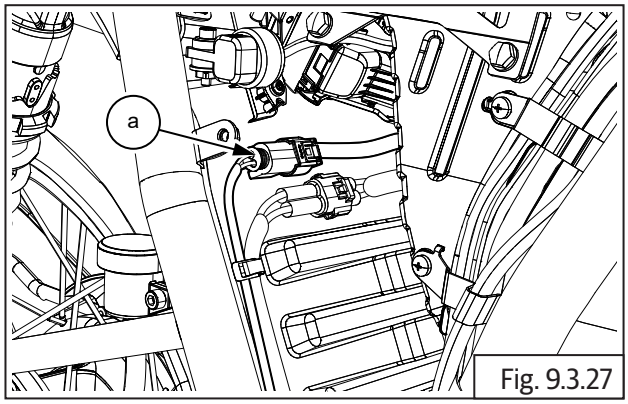

Fig. 9.3.27

- Release sensor coupler wire from the routing in mudguard **(a)** and brake hose clip on swing arm RH.

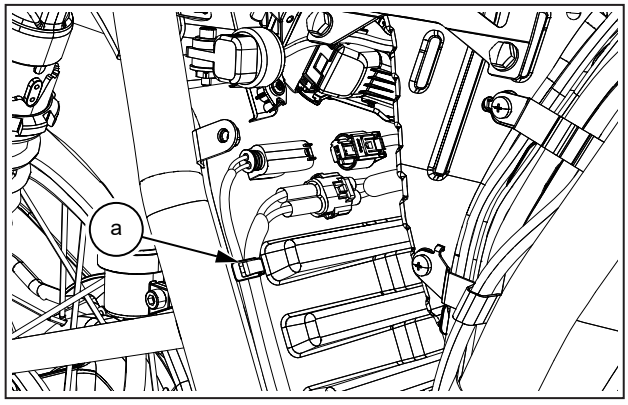

Fig. 9.3.28

- Loosen and remove hex flange head bolt **(M6) (a)** holding sensor **(b)** to rear wheel caliper bracket top.

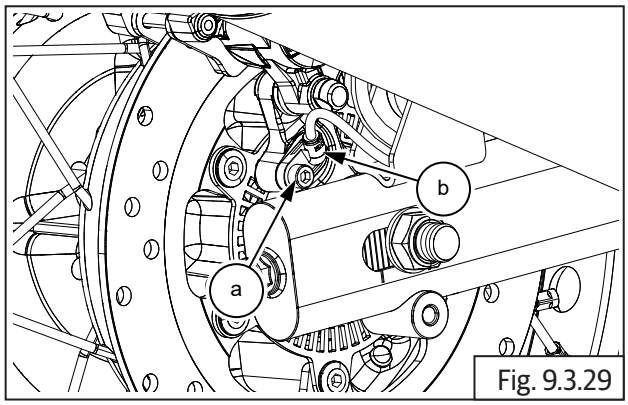

Fig. 9.3.29

	5 mm Allen socket with Ratchet

- Loosen and remove rear shock absorber RH, bottom mounting hex socket head bolt **(a)** and release shock absorber from swing arm (section 6.9.5).

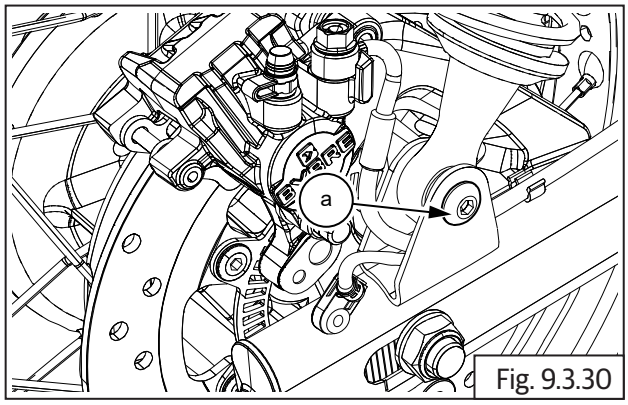

Fig. 9.3.30

- Gently pull out sensor **(a)** from rear wheel caliper bracket top.

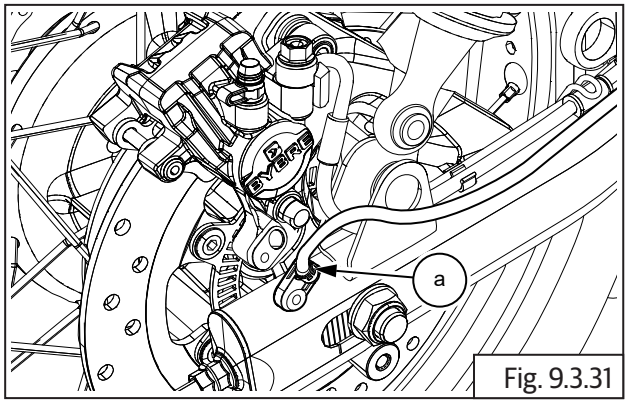

Fig. 9.3.31

9.3.4. Toner Ring - Front

- Refer front wheel removal (section 6.8.2).

9.3.5. Toner Ring -Rear

- Refer rear wheel removal (section 6.8.4).

Assembly

9.3.6. Toner Ring - Front

- Refer front wheel assembly (section 6.8.12).

9.3.7. Toner Ring -Rear

- Refer rear wheel assembly (section 6.8.8).

9.3.8. Wheel Speed Sensor - Rear

- Gently locate sensor **(a)** into rear wheel caliper bracket top.

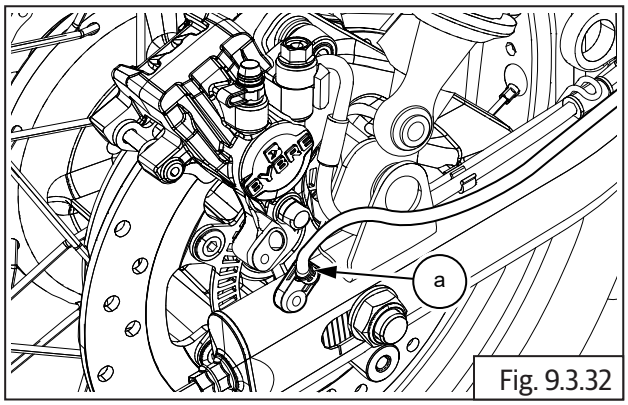

Fig. 9.3.32

- Locate and tighten rear shock absorber RH, bottom mounting hex socket head bolt **(a)** and assemble shock absorber into swing arm (section 6.9.13).

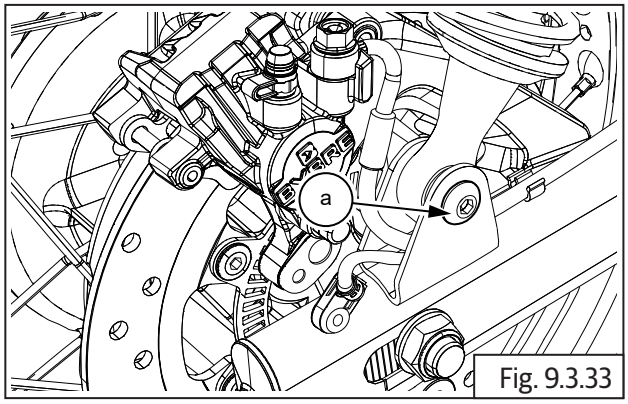

Fig. 9.3.33

- Locate and tighten hex flange head bolt **(M6) (a)** holding sensor **(b)** to rear wheel caliper bracket top.

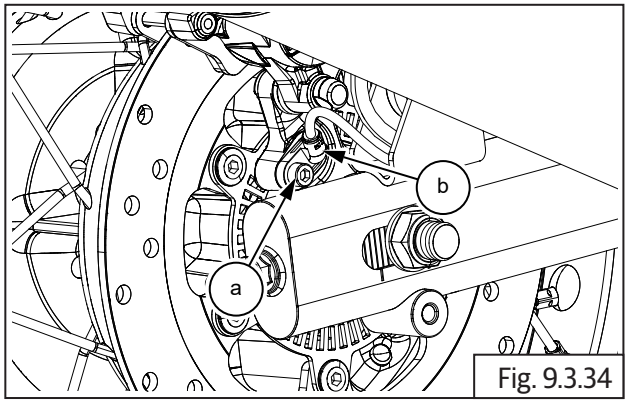

Fig. 9.3.34

	5 mm Allen socket with Ratchet
Torque	3 N-m/0.3 kgf-m

- Locate sensor coupler wire into the routing in mudguard **(a)** and brake hose clip on swing arm RH.

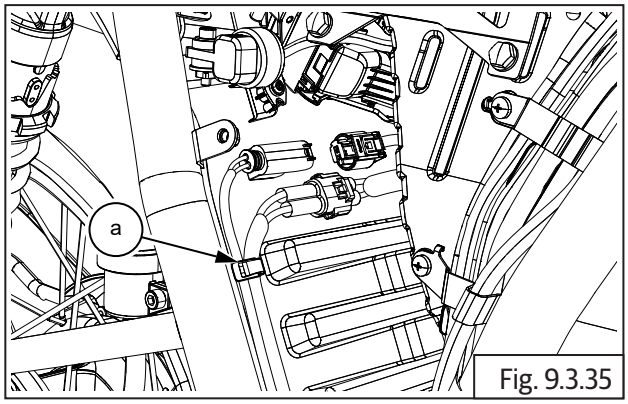

Fig. 9.3.35

- Connect sensor coupler **(a)** into harness near rollover sensor.

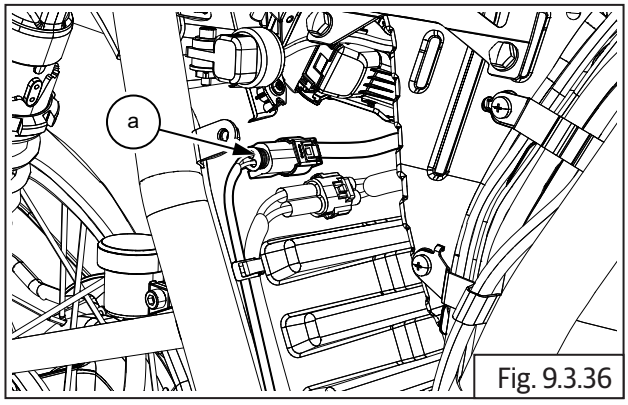

Fig. 9.3.36

- Locate battery into battery tray (section 11.8.3) and connect battery terminals (section 11.8.4).
- Assemble the following
  - Side panel RH (section 6.7.8).
  - Rider seat (section 6.7.7).

9.3.9. Wheel Speed Sensor - Front

- Gently locate sensor onto fork end LH.
- Locate and tighten hex flange bolt **(M6) (a)** holding sensor **(b)** to fork end LH.

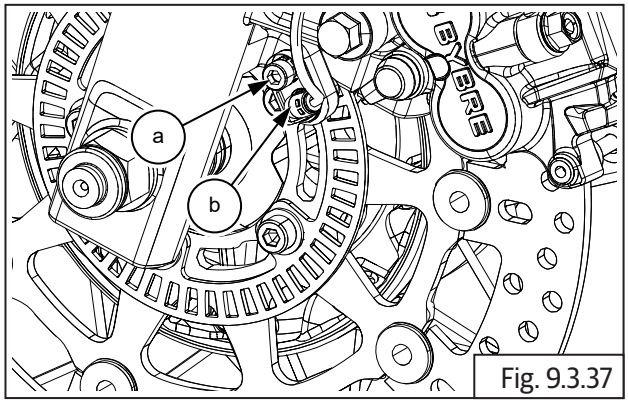

Fig. 9.3.37

	5 mm Allen socket with Ratchet
Torque	3 N-m/0.3 kgf-m

- Locate sensor coupler wire into clip on fork end LH.

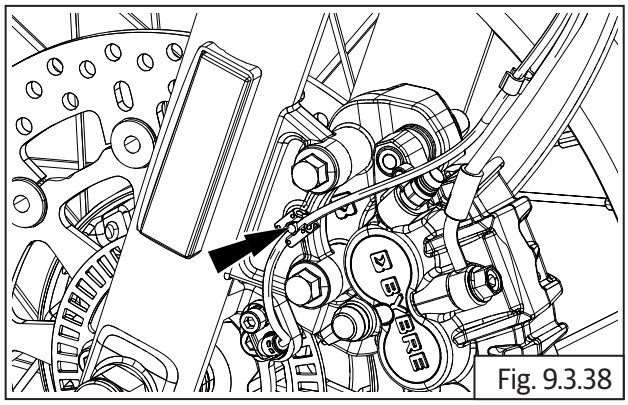
Fig. 9.3.38

- Locate sensor coupler wire mounting clamps front **(a)** into frame.

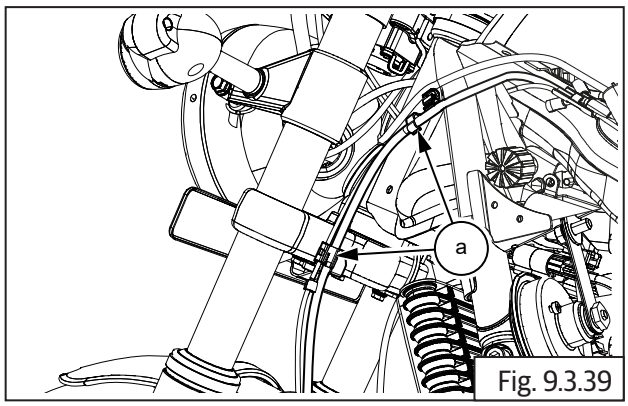

Fig. 9.3.39

- Connect sensor coupler **(a)** into harness near ABS modulator bracket.

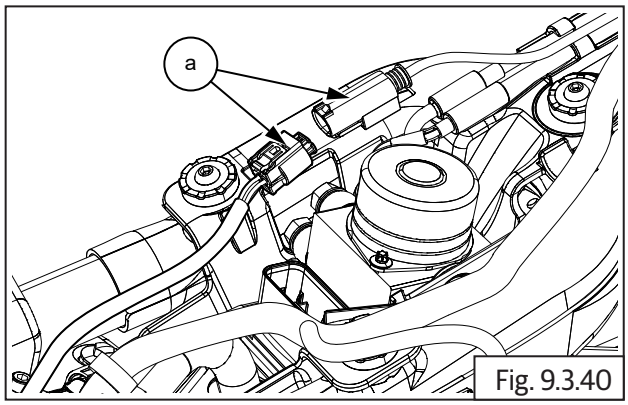

Fig. 9.3.40

⚠ WARNING

DO NOT interchange ABS unit/ECU from one motorcycle to another.

9.3.10. Modulator

- Brake hose color tags:
  - a) BLUE - Front Master Cylinder Assembly
  - b) GREEN - Front Brake Caliper
  - c) RED - Rear Brake Caliper
  - d) YELLOW - Rear Master Cylinder Assembly
- Ensure the sequence of the hoses is as per the color tags shown below.

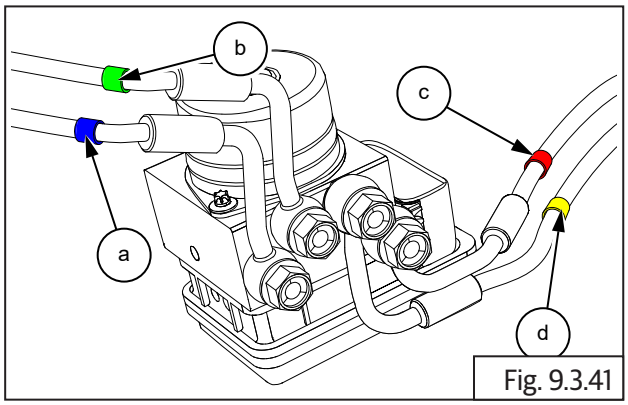

Fig. 9.3.41

- Locate 4 Nos. brake hoses into modulator.
- Support modulator suitably on a work table, keeping the color tags in mind, locate and tighten 4 Nos. banjo bolts **(a)** along with washers into modulator to fix brake hoses **(b).**
- Ensure the reference marks to align properly.

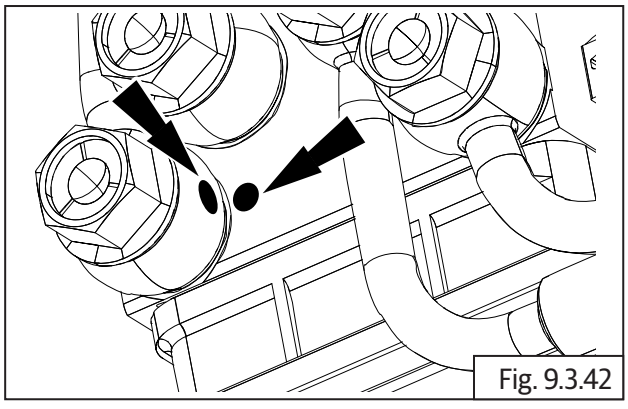
Fig. 9.3.42

- Repeat the above process to other brake hoses.
- RED - Modulator to rear brake caliper hose.

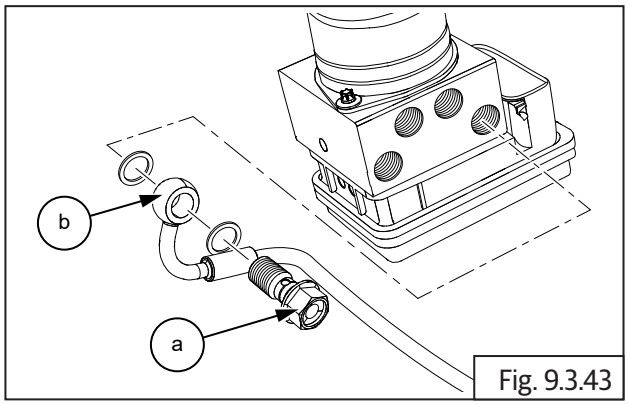

Fig. 9.3.43

- YELLOW - Modulator to rear master cylinder assembly hose.

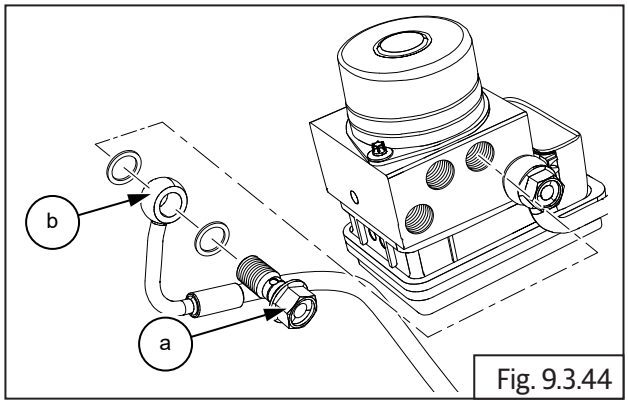

Fig. 9.3.44

- GREEN - Modulator to front brake caliper hose.

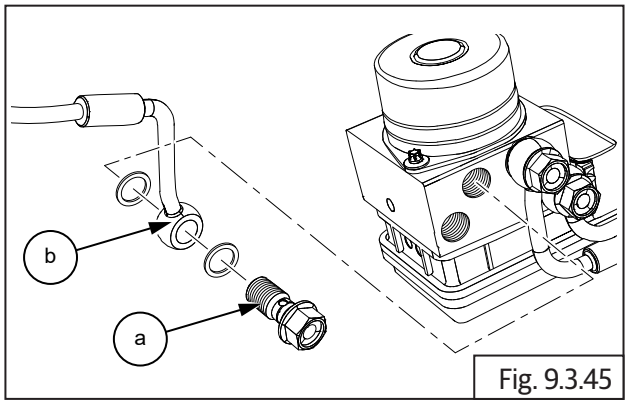

Fig. 9.3.45

- BLUE - Modulator to front master cylinder assembly hose.

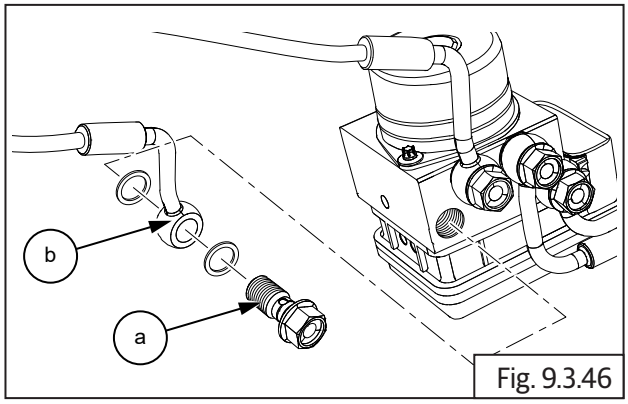

Fig. 9.3.46

- Locate the ABS modulator **(a)** into bracket **(b)** along with 4 Nos. brake hoses.

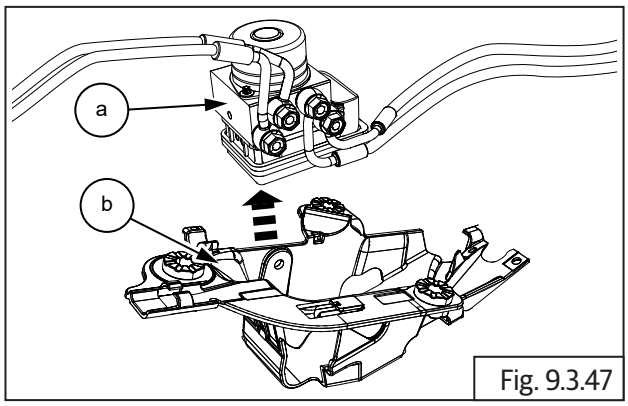

Fig. 9.3.47

- Locate and tighten hex bolt **(M6) (a)** at the LH side of bracket **(b)**.

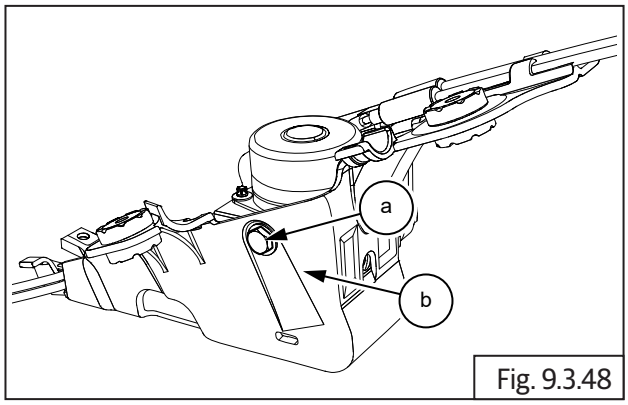

Fig. 9.3.48

	10 mm Socket with Ratchet

- Gently locate and assemble modulator **(a)** along with bracket and 4 Nos. hoses **(b)** into frame.

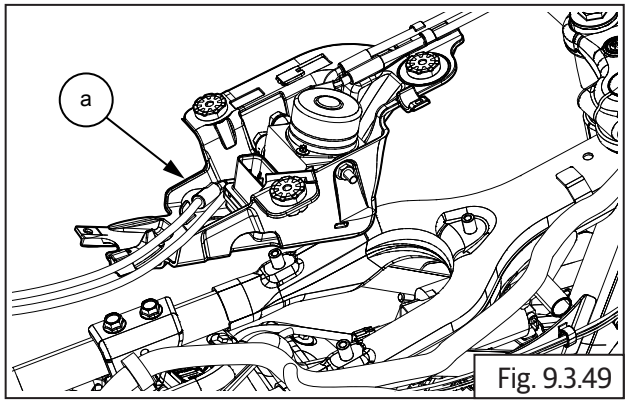

Fig. 9.3.49

- Locate and tighten 3 Nos. mushroom head screws **(M6) (a)** holding ABS modulator mounting bracket to frame.
- Ensure all 4 Nos. brake hoses are free to be removed along with modulator from frame.

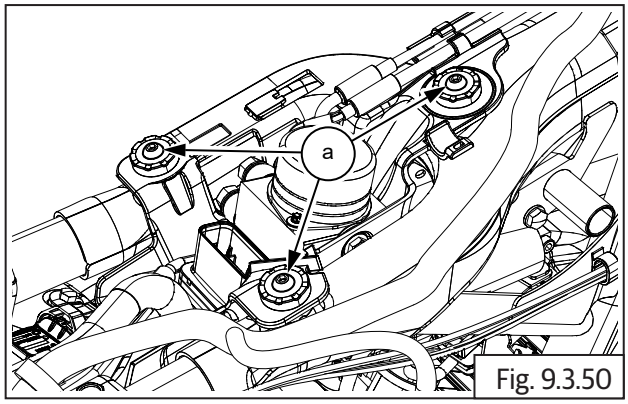

Fig. 9.3.50

	5 mm Allen socket with Ratchet

- Locate and assemble MAP sensor **(a)** into modulator bracket and connect MAP sensor connection (section 10.1.3).

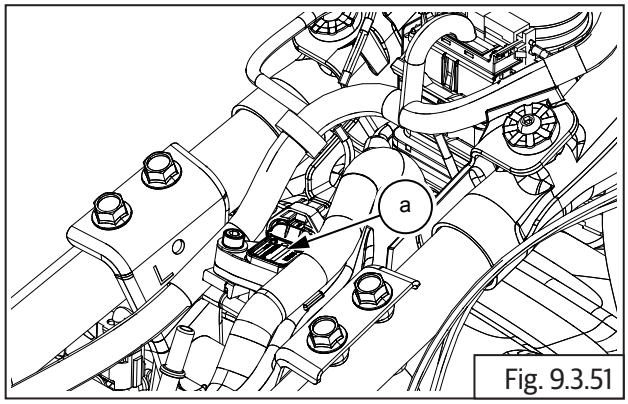

Fig. 9.3.51

- Connect front wheel speed sensor wiring connector **(a)** into harness.

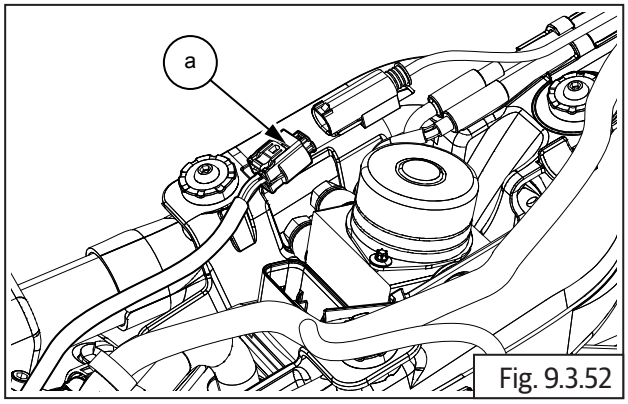

Fig. 9.3.52

- Move harness towards the bracket and locate strap holding main harness **(a)** to ABS housing bracket.

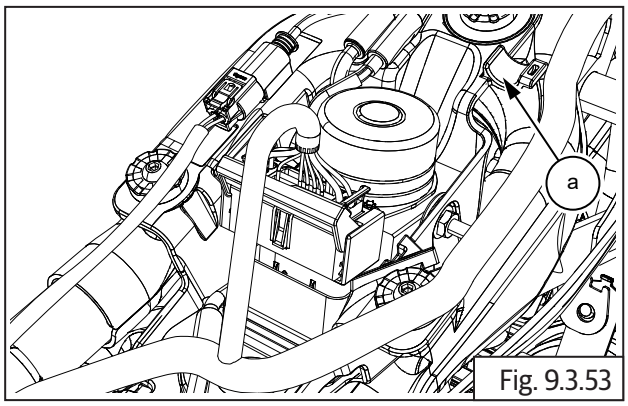

Fig. 9.3.53

- Connect ABS modulator electrical connector **(a)** into engine control unit (ECU) **(b)**.

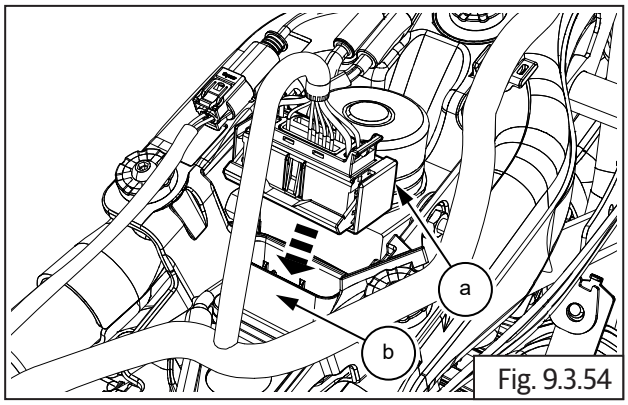

Fig. 9.3.54

- Connect holding straps **(a)** of the brake hoses to the frame/fork end/swing arm.

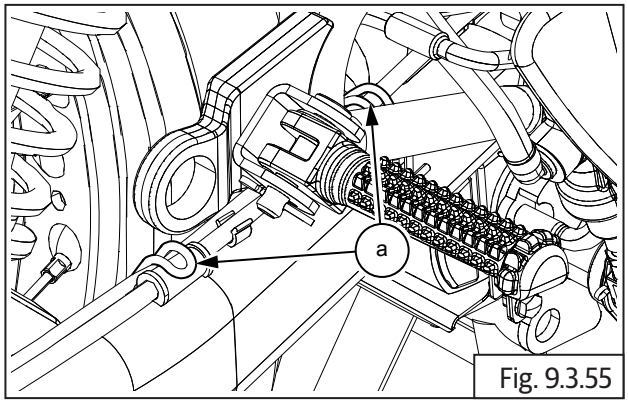

Fig. 9.3.55

- Locate brake hose mounting clamp rear **(a)** into air filter box RH.

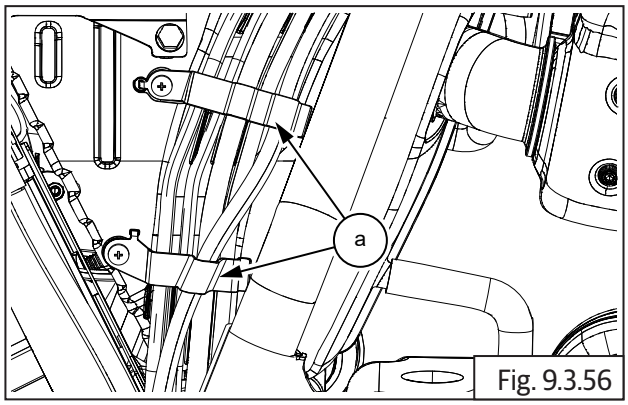

Fig. 9.3.56

- Locate brake hose mounting clamps front **(a)** into frame.

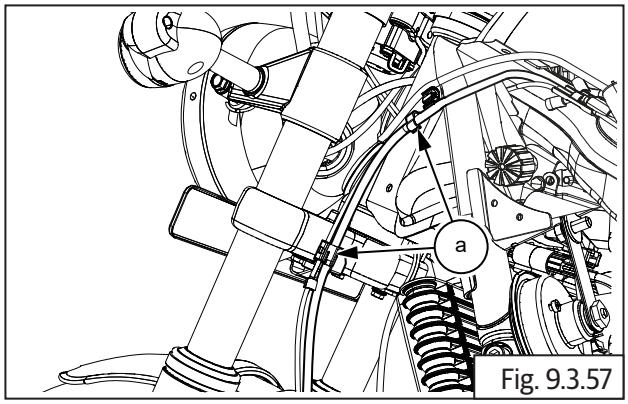

Fig. 9.3.57

- Locate and assemble banjo bolt **(a)** and connect hose **(b)** into rear master cylinder assembly.

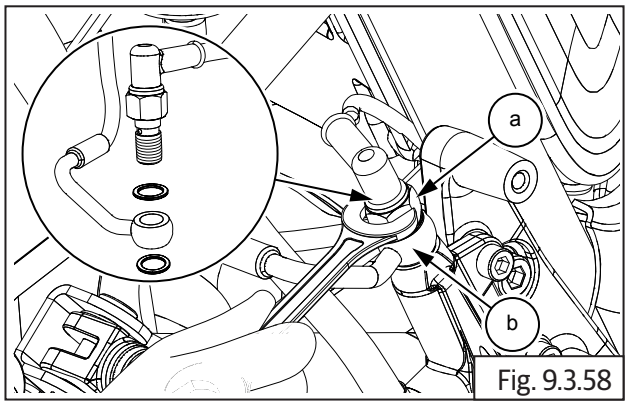

Fig. 9.3.58

	12 mm Double end spanner

- Locate and assemble banjo bolt **(a)** and connect hose **(b)** into rear caliper from rear wheel RH.

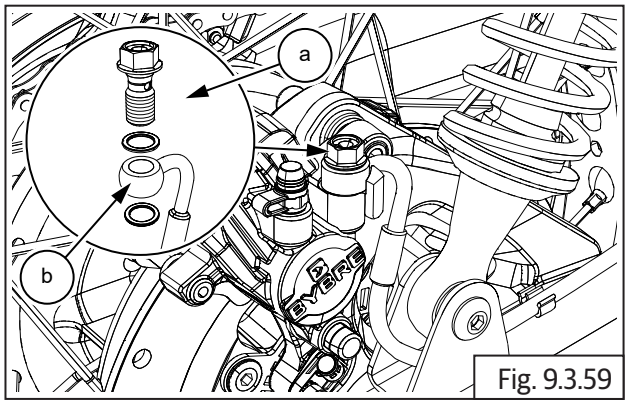

Fig. 9.3.59

	12 mm Double end spanner

- Locate and assemble banjo bolt **(a)** and connect hose **(b)** into front master cylinder on handlebar RH.

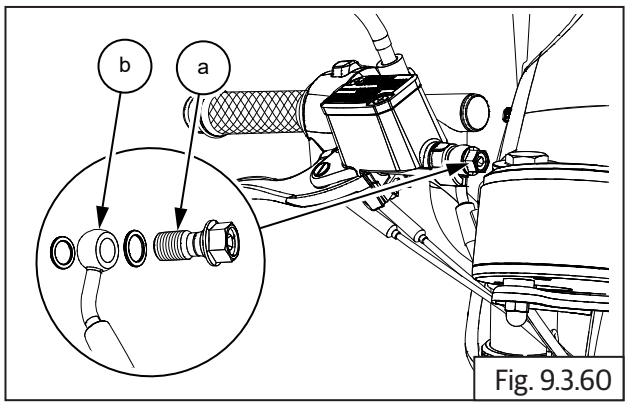

Fig. 9.3.60

	12 mm Double end spanner

- Locate and assemble banjo bolt **(a)** and connect hose **(b)** into front caliper on front fork LH.

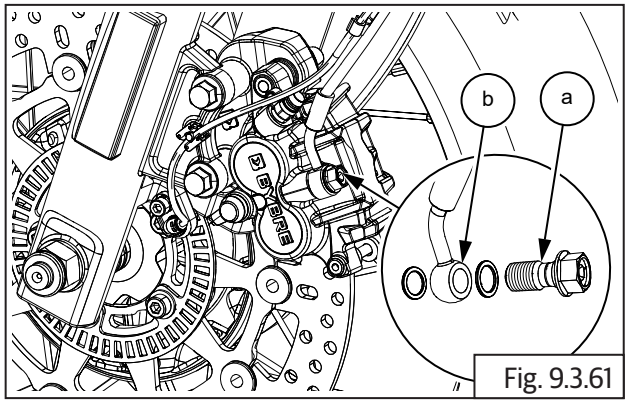

Fig. 9.3.61

	12 mm Double end spanner

- **Assemble the following parts:**
  - Fuel tank assembly (section 7.1.15).
  - Rider seat (section 6.7.7).
  - Side panel RH (section 6.7.8).

! CAUTION

After assembly of all aggregates, ensure the following:

- **Fuel is refilled/top up into fuel tank.**
- **Fuel feed and return hoses are properly connected into the fuel rail.**
- **Wiring couplers to fuel pump and low fuel sensors are properly connected.**
- **EVAP hose pipes are properly connected.**

⚠ WARNING

Gasoline is extremely flammable and highly explosive. Improper handling can lead to fatal accident or serious injury.

9.3.11 ABS DTC Codes

DTC (P code)	Failure type	Failure Description	Query	Remedy
C1021	ECU	ABS ECU Internal fault	ABS Microcontroller Failure	Change ABS unit
C1019	VR	ABS ECU Relay Fault	Failure in the ABS valve relay	Change ABS unit
C1054	Valves EV	(EV) ABS Apply Solenoid Circuit Open or high Resistance (Front)	Failure in the front Inlet Valve	Change ABS unit
C1052		(EV) ABS Apply Solenoid Circuit Open or high Resistance (Rear)	Failure in the rear Inlet Valve	Change ABS unit
C1049		(AV) ABS Release Solenoid Circuit Open or high Resistance (Front)	Failure in the front Outlet Valve	Change ABS unit
C1048		(AV) ABS Release Solenoid Circuit Open or high Resistance (Rear)	Failure in the rear Outlet Valve	Change ABS unit
C1059	UZ	ABS Voltage High	Battery Voltage Too high	Check the voltage regulator/Battery
C1058		ABS Voltage Lo w	Battery Voltage Too Low	Check the Battery
C1015	RFP/RFP_ HW	ABS Pump/Motor Failure	Failure in the ABS Pump Motor	Change ABS unit
C1033	WSS_ohmic	ABS Wheel Speed Circuit Open or Shorted (Front)	Failure in the Front WSS (electric)	Change Front WSS or Check wiring from WSS to ABS"
C1031		ABS Wheel Speed Circuit Open or Shorted (Rear)	Failure in the Rear WSS (electric)	Change Rear WSS or Check wiring from WSS to ABS
C1034	WSS_ plausibility	ABS Wheel Speed Intermittent (Front)	Signal quality from the front WSS is not good	Check the front toner wheel/ Airgap consistency/WSS bracket
C1032		ABS Wheel Speed Intermittent (Rear)	Signal quality from the Rear WSS is not good	Check the Rear toner wheel/ Airgap consistency/WSS bracket

DTC (P code)	Failure type	Failure Description	Query	Remedy
C1024	WSS_ GENERIC	(GENERIC) ABS Wheel Speed Difference too high	Signal quality from the front/ Rear WSS is not good	Check the front toner wheel/ Airgap consistency/WSS bracket
U2922	CAN_ BUSOFF	High Speed CAN Communications Bus Fault	CAN BusOff failure	Check for CAN lines connection
U2921	CAN_ GENERIC	CAN Generic monitoring	CAN controller failure. Diagnosis is not possible with tester in this case.	Change ABS unit

Bleeding the Hydraulic Brake System With DOL Tool (Front & Rear)

9.4. Preparation (Front Disc Brake)

- Use a Philips screwdriver to loosen and remove the screws of the front disc brake master cylinder.
- Remove the cap, and Diaphragm Plate with diaphragm.
- Remove the dust cap and place the suitable ring spanner on the bleeding nipple and attach a Vinyl Pipe (transparent).
- Thereafter, take a Clean glass / Plastic container (transparent) with fresh brake fluid, and dip the other end of the vinyl pipe (transparent) in it (make sure that the vinyl pipe is always submerged in the fluid during the bleeding process).

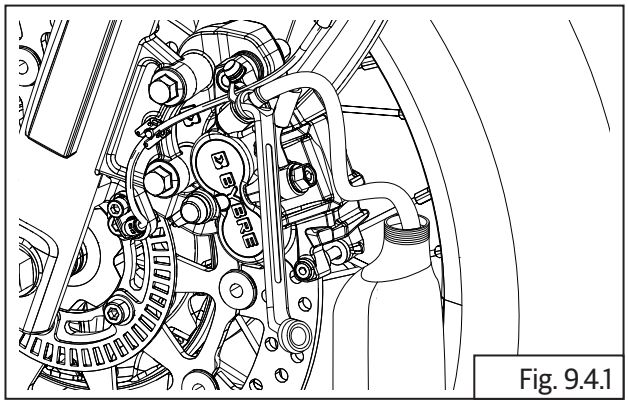

Fig. 9.4.1

- Connect the DOL tool switch "ON" the ignition.

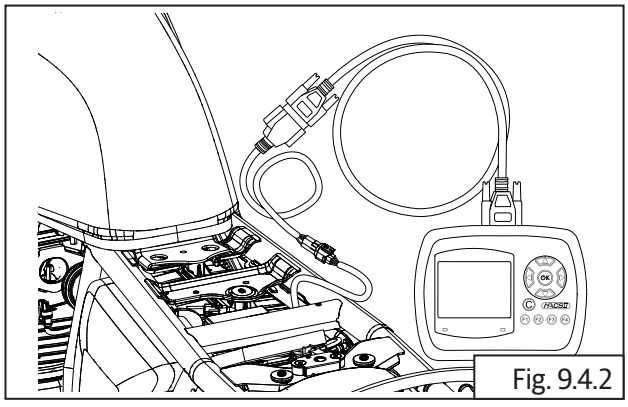

Fig. 9.4.2

Procedure

- Select – F1 Diagnosis.

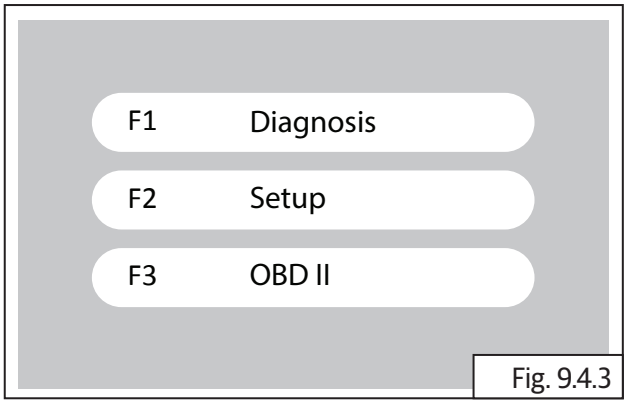

Fig. 9.4.3

- Select – Royal D1.

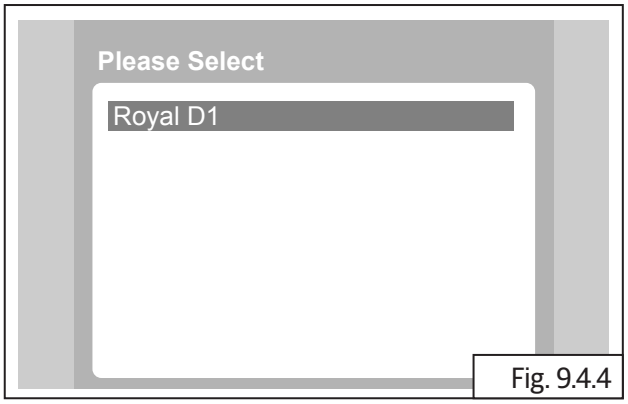

Fig. 9.4.4

- Select – Bosch ABS.

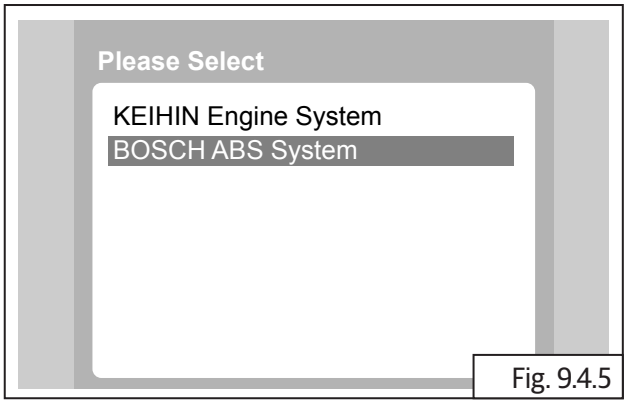

Fig. 9.4.5

- Default Screen.

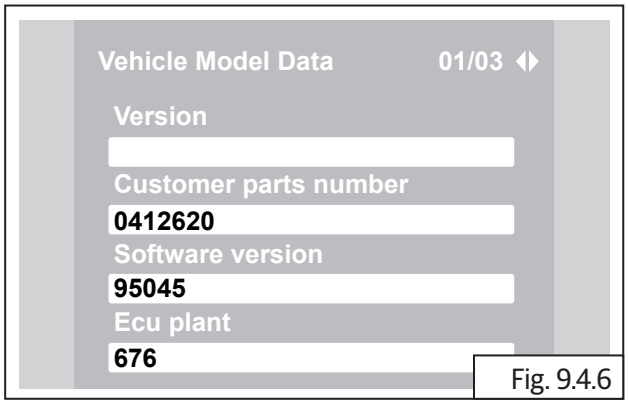

Fig. 9.4.6

- Press C.



Fig. 9.4.7

- Select - Spl Function.

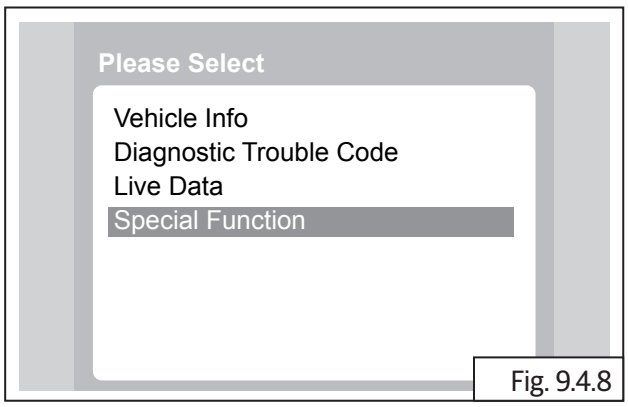

Fig. 9.4.8

- Select - Repair Air Bleed.

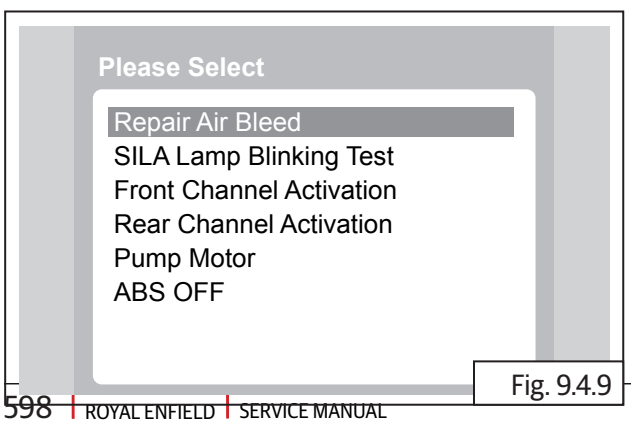

Fig. 9.4.9

- Default Screen.

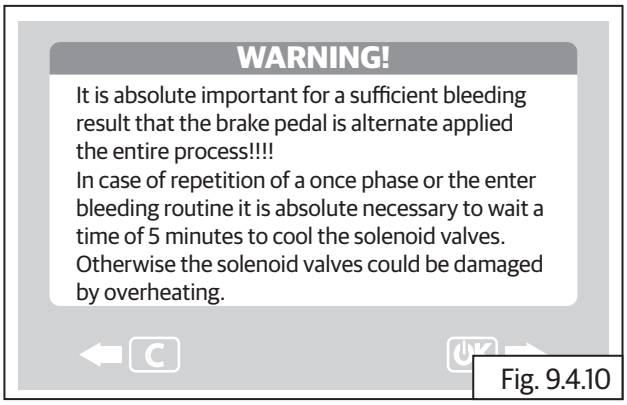

Fig. 9.4.10

- Default Screen.

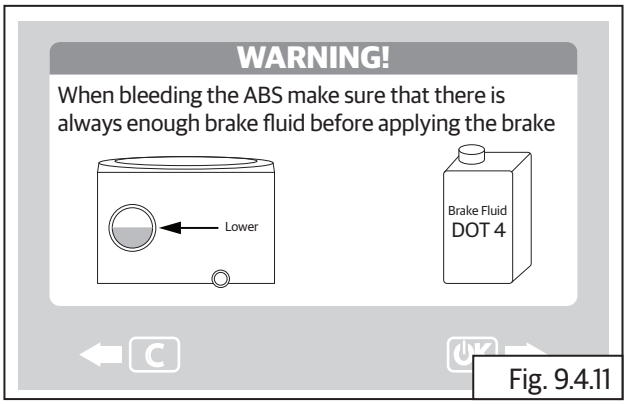

Fig. 9.4.11

- Loosen the bleeder nipple.

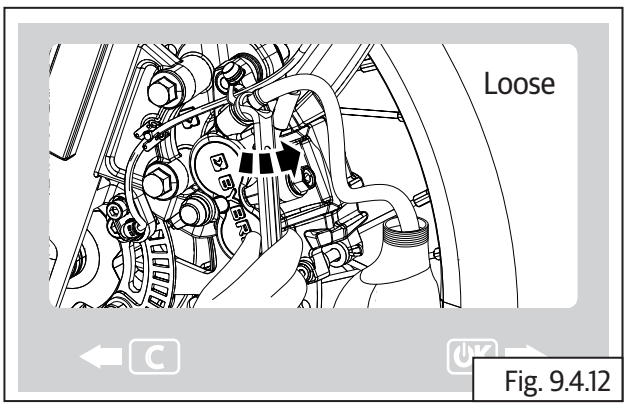

Fig. 9.4.12

- Operate the brake lever.

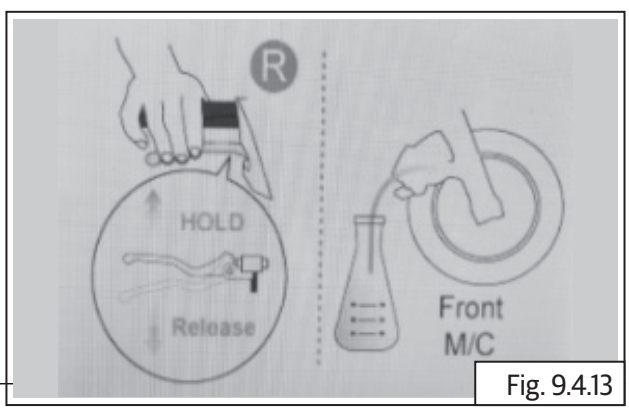

Fig. 9.4.13

- Hold the lever in pressed condition and tighten the bleeder nipple.

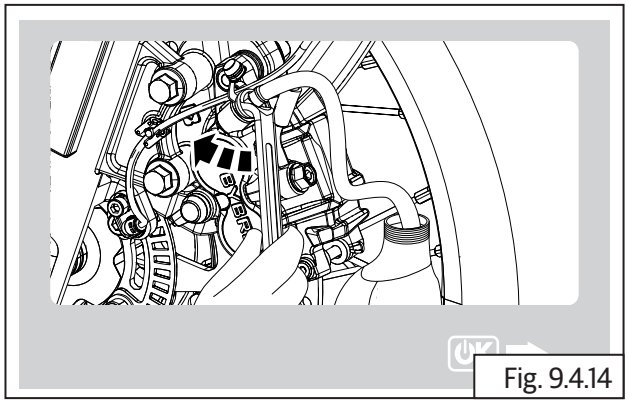

Fig. 9.4.14

- Loosen the bleeder nipple – (Brake lever in released condition).

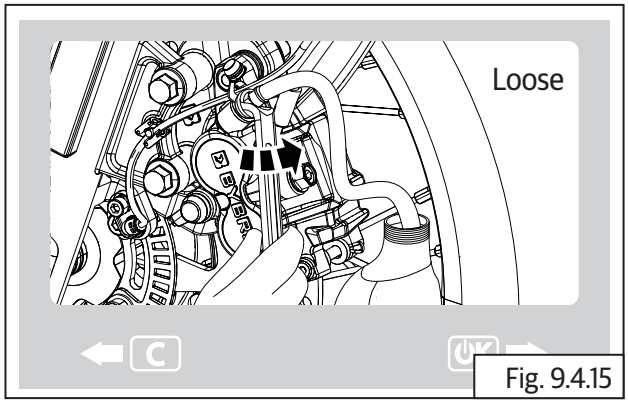

Fig. 9.4.15

- Operate the brake lever till the next window open in DOL.

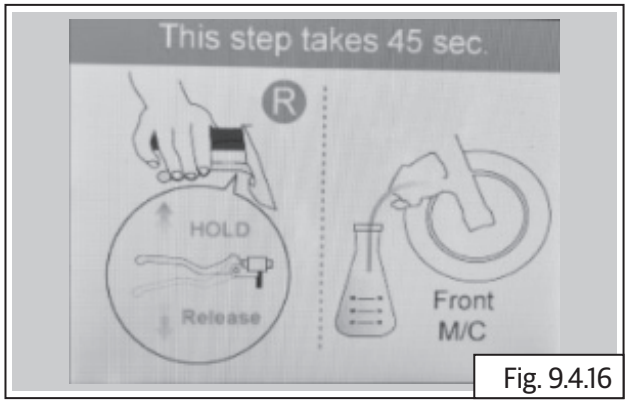

Fig. 9.4.16

- Hold the brake lever in pressed condition and tighten the bleeding nipple.

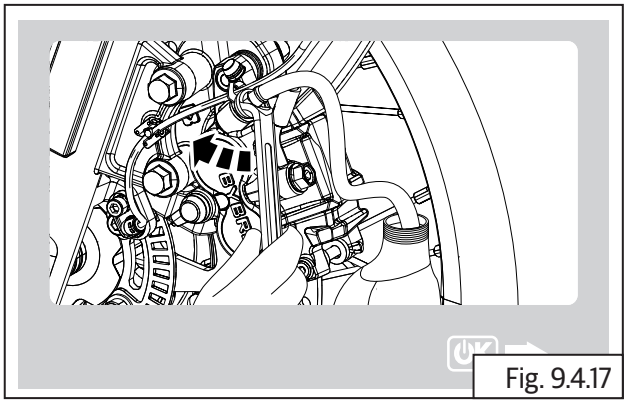

Fig. 9.4.17

- During this operation pump will run and expel the air trapped in the system through bleeder nipple.

9.5. Reassembly

- Switch OFF the ignition.
- Disconnect the DOL Tool.
- Remove the vinyl pipe and remove the ring spanner.
- Refit the dust cap (make sure that there is no leak from the bleeder nipple).
- Refit the diaphragm with diaphragm plate of the master cylinder.
- Refit the master cylinder cap taking care that the vent slot in the cap is facing rider.

9.6. Preparation (Rear Disc Brake)

- Remove the reservoir cap of the rear disc brake.
- Remove the Diaphragm Plate with diaphragm.
- Remove the dust cap and place the suitable ring spanner on the bleeding nipple.
- Attach a Vinyl Pipe (transparent).
- Thereafter, take a Clean glass / Plastic container (transparent) with fresh brake fluid, and dip the other end of the vinyl pipe (transparent) in it (make sure that the vinyl pipe is always submerged in the fluid during the bleeding process).

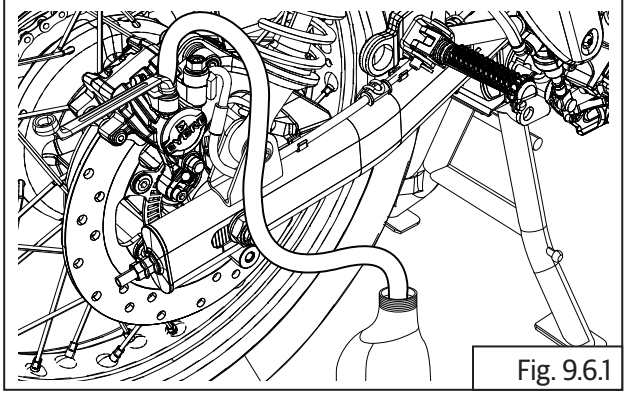

Fig. 9.6.1

- Connect the DOL tool switch on the ignition

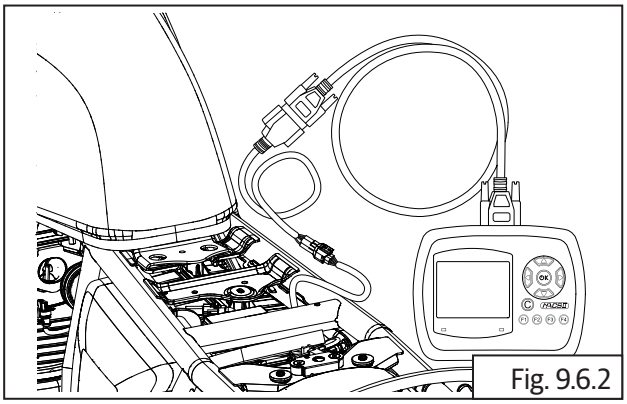

Fig. 9.6.2

- Loosen the bleeder nipple.

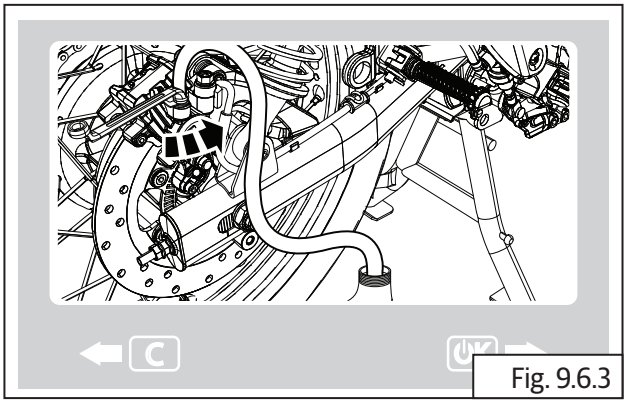

Fig. 9.6.3

- Default Screen.

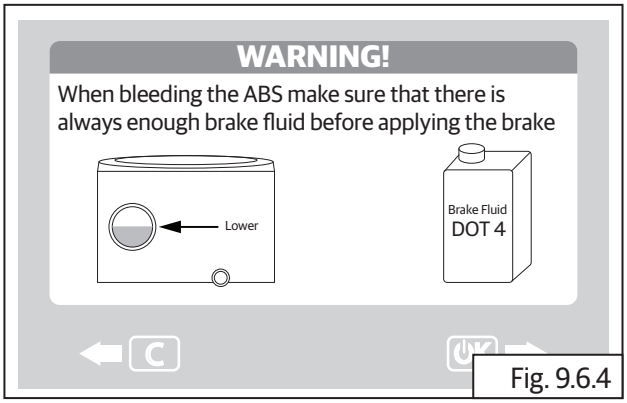

Fig. 9.6.4

- Operate the brake lever.

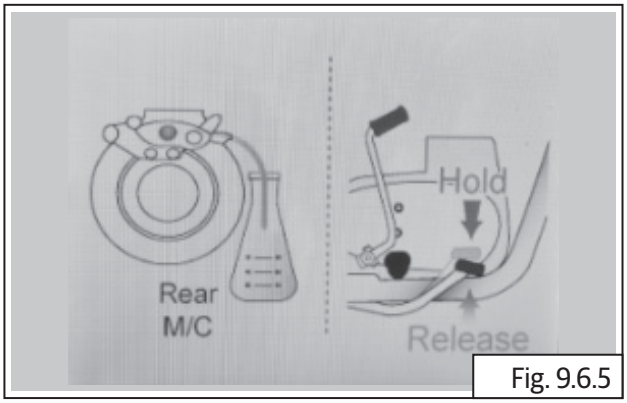

Fig. 9.6.5

- Hold the brake Pedal in pressed condition and tighten the bleeding nipple.

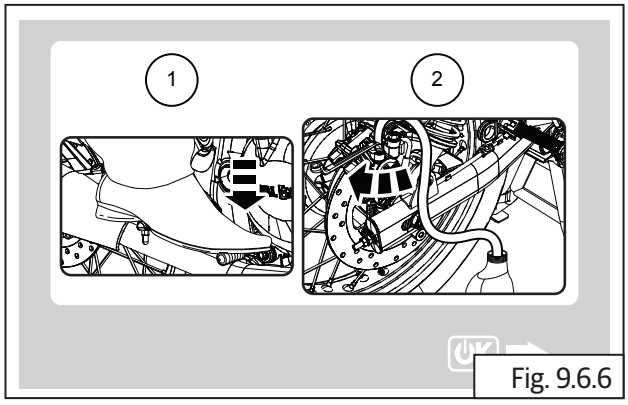

Fig. 9.6.6

- Loosen the bleeder nipple – (Brake lever in released condition)

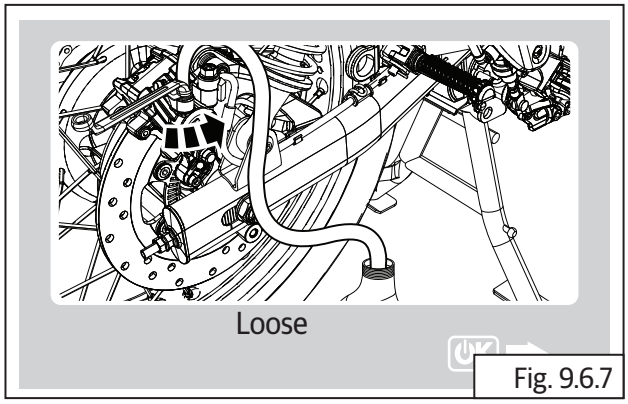

Fig. 9.6.7

- Operate the brake lever until the next window opens in DOL.

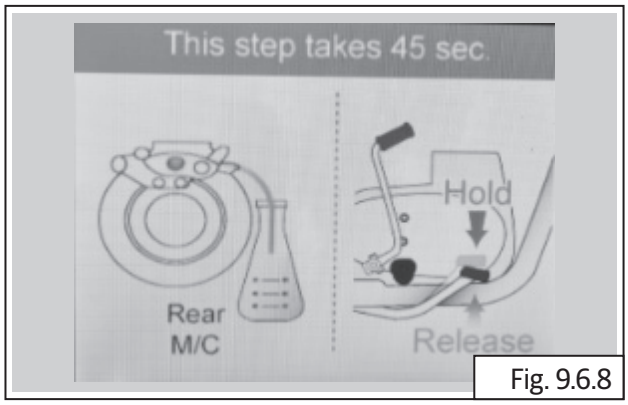

Fig. 9.6.8

- Hold the brake lever in pressed condition and tighten the bleeding nipple.

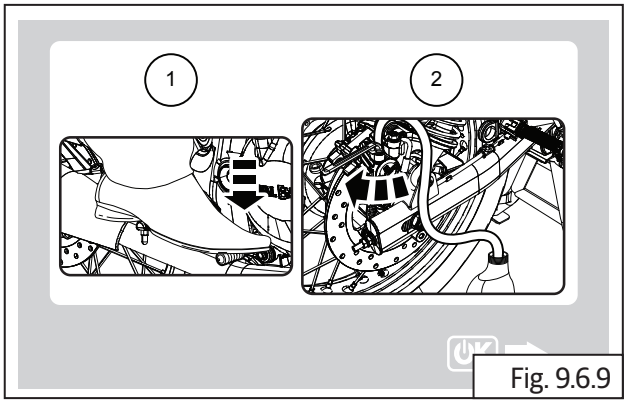

Fig. 9.6.9

- During this operation pump will run and expel the air trapped in the system through bleeder nipple

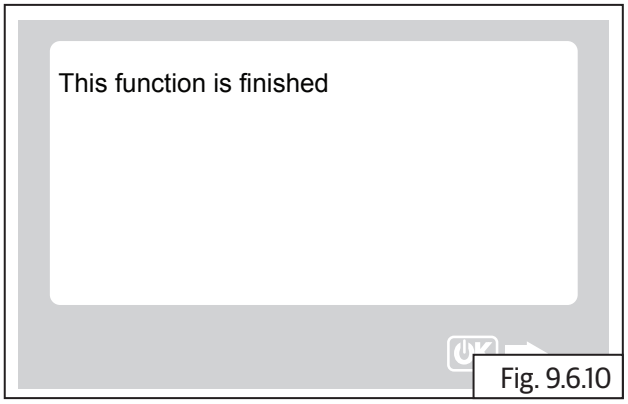

Fig. 9.6.10

9.7. Reassembly

- Switch OFF the ignition and disconnect and remove the DOL tool.
- Remove the vinyl pipe and remove the ring spanner.
- Refit the dust cap (make sure that there is no leak from the bleeder nipple).
- Refit the diaphragm with diaphragm plate of the reservoir.
- Refit the reservoir cap.

BRAKE BLEEDING (Front & Rear)
Manual Method

9.8. Brake Bleeding

⚠ CAUTION

Ensure the motorcycle is upright on a firm and flat surface.

Support motorcycle with suitable equipment below cradle frame.

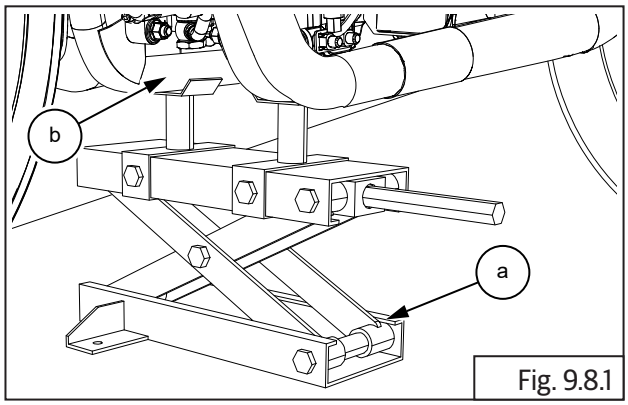

Fig. 9.8.1

⚠ CAUTION

Do not spill brake fluid on any part of the motorcycle as it will damage the painted/ plastic surfaces.

⚠ WARNING

Ensure brake fluid does not get in contact with eyes and skin. In-case of exposure wash affected area thoroughly with water. Seek medical attention immediately if any irritation persists.

Keep out of reach of children.

Dispose drained brake fluid carefully and responsibly.

⚠ WARNING

Brake fluid is Hygroscopic hence, absorbs moisture from air. Ensure fluid reservoirs caps are closed properly.

If moisture in the brake system may cause damage to brake parts and fluid, causing reduction in braking efficiency; which in turn may lead to fatal accidents.

NOTE

- *Use brake fluid from sealed containers only.*
- *Use only DOT4 specification brake fluid listed in technical specifications (section 2.4).*
- *Ensure ignition switch and stop switch are in ON position.*

9.8.1. Front Brake Bleeding

- Loosen and remove 2 Nos. screws **(a)** from front brake reservoir tank.

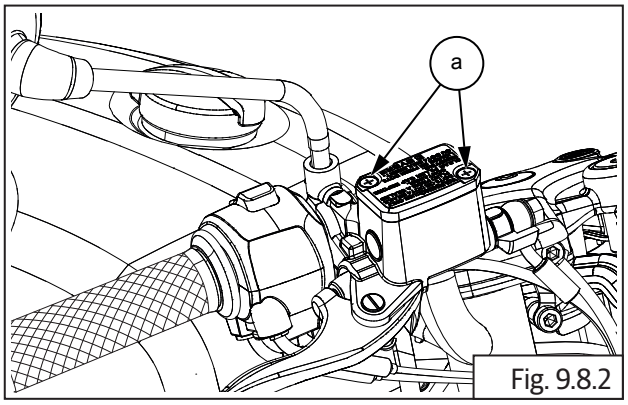

Fig. 9.8.2

	Screw driver phillips

- Remove reservoir cap **(a)** from front brake reservoir tank **(b)**.

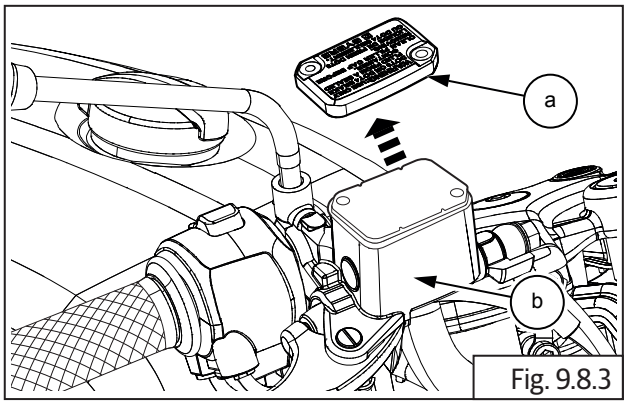

Fig. 9.8.3

- Remove reservoir diaphragm **(a)** from front brake reservoir tank **(b)**.

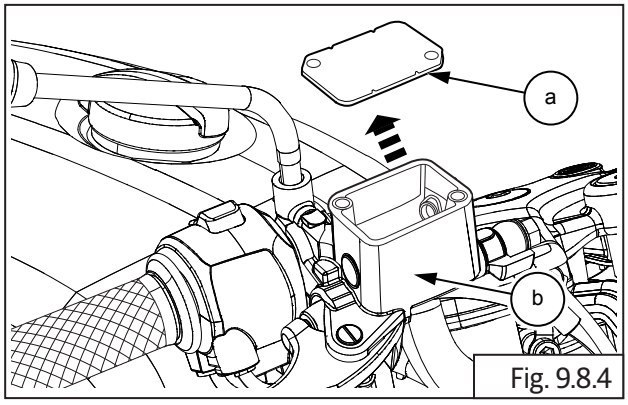

Fig. 9.8.4

- Gently top up fresh brake fluid **(a)** into reservoir **(b)**.
- Do not over fill as it may cause malfunctioning of some parts due to brake fluid spillage.

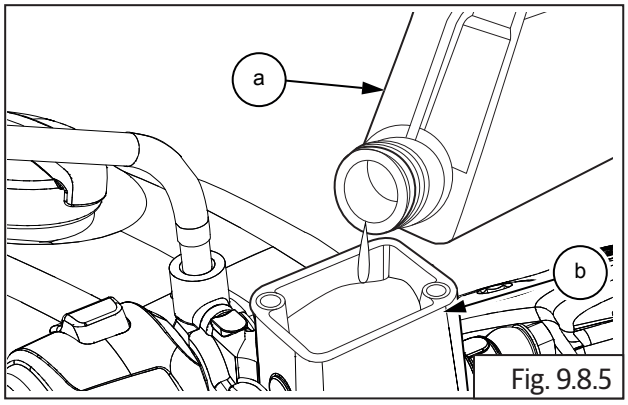

Fig. 9.8.5

- Locate diaphragm and cap **(a)** on the reservoir and DO NOT fasten with screws.

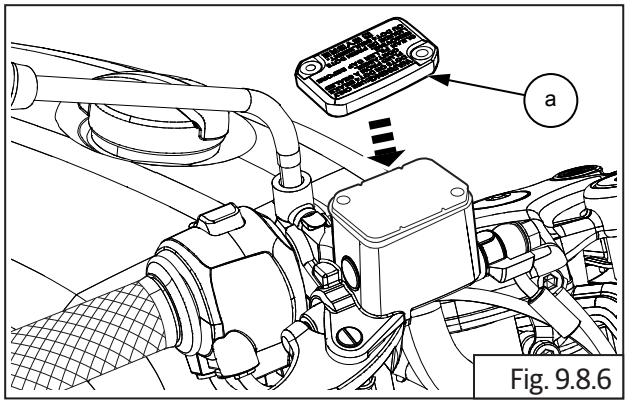

Fig. 9.8.6

- Remove rubber cap **(a)** from bleeder valve **(b)** from front caliper on front wheel RH.

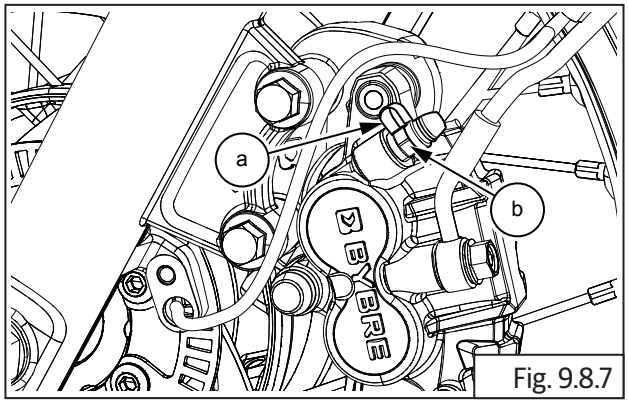

Fig. 9.8.7

- Dip bleeder hose **(a)** one end into a container **(b)** with fresh brake fluid to avoid air passage into bleeder valve.
- Insert bleeder hose other end into bleeder valve **(c)** on front caliper to drain used oil.

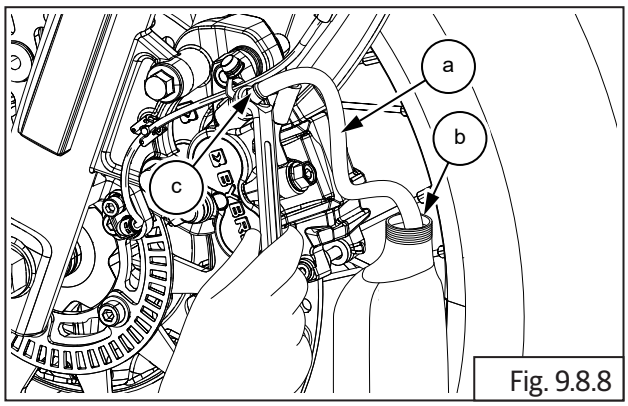

Fig. 9.8.8

NOTE
• *Use brake fluid from new, sealed containers only.* • *Use only DOT4 specification brake fluid listed in technical specifications (section 2.4).*

- Gently pump brake lever **(a)** until brake is effective.
- Once brake lever is effective, hold it in place.

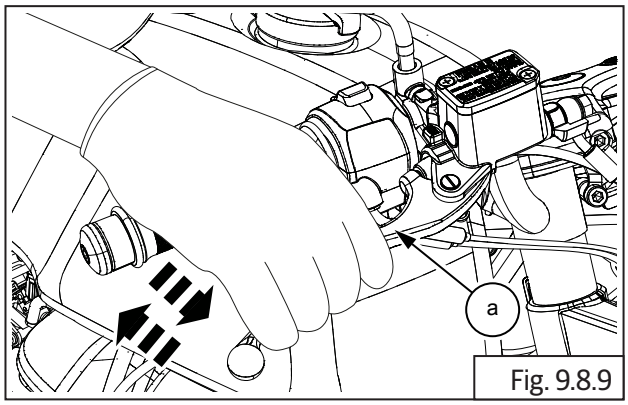

Fig. 9.8.9

- While holding brake lever, quickly open and close bleeder valve **(M6) (a)**.

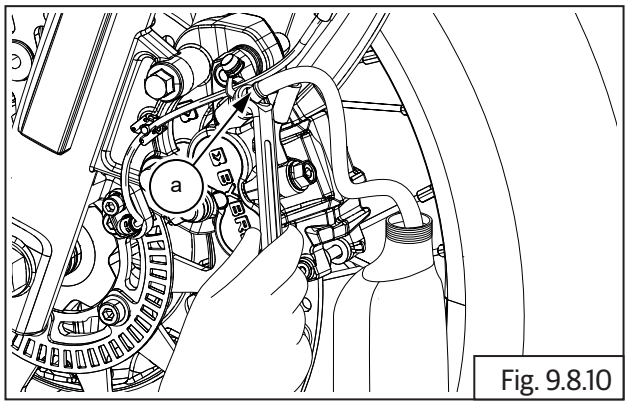

Fig. 9.8.10

	11 mm Ring spanner and air bleeder.

- Release the brake lever **(a)**.

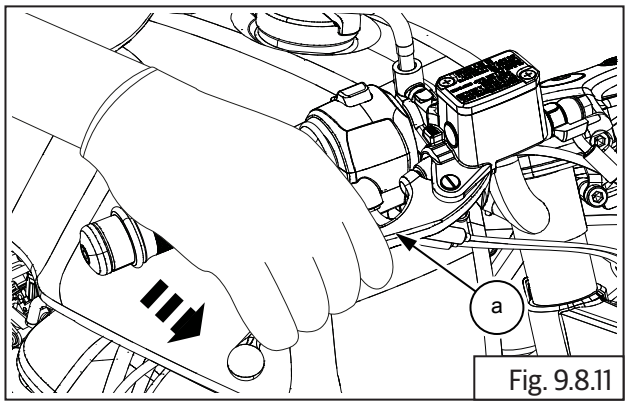

Fig. 9.8.11

- Gently top up fresh brake fluid **(a)** into reservoir **(b)**.
- Do not over fill as it may cause malfunctioning of some parts due to brake fluid spillage.

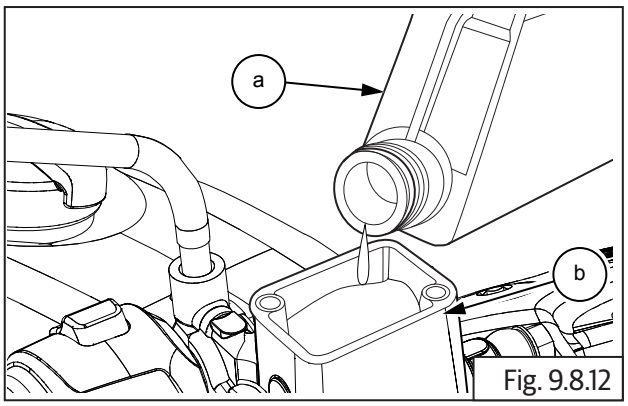

Fig. 9.8.12

- Repeat this operation until air from the system is released completely. Observe bleeder hose. As air in the system is cleared, bubbles stop appearing in hose.

⚠ CAUTION

While bleeding the brake system always ensure brake fluid is above min level BUT below "Max" level. Never allow the brake fluid go below minimum level to avoid air entering brake system. Always fill the brake fluid from sealed container only.

Do not leave the master cylinder cap and or brake fluid container open for long as brake fluid is highly hygroscopic in nature a and will loose its properties if exposed to atmospheric conditions.

- Inspect brake lever efficiency.

NOTE

- *The fluid level must be checked often during the bleeding operation and top up with fresh brake fluid as necessary.*
- *Gently tap brake hose for proper bleeding performance.*
- *Check brake fluid level after completion of brake bleeding.*
- *Whenever the modulator is removed or replaced the brake bleeding time will be longer as brake fluid will have to travel from master cylinder to modulator and then to wheel caliper*
- *Whenever bleeding the brake system, it is always recommended to bleed both the front and rear brakes.*

- Remove bleeder hose **(a)** from bleeder valve **(b)**.

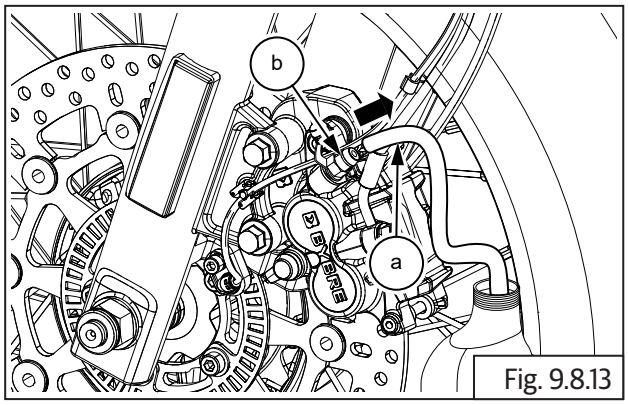

Fig. 9.8.13

- Close rubber cap **(a)** on bleeder valve **(b).**
- Ensure cap is locked properly to avoid exposure to dust or mud.

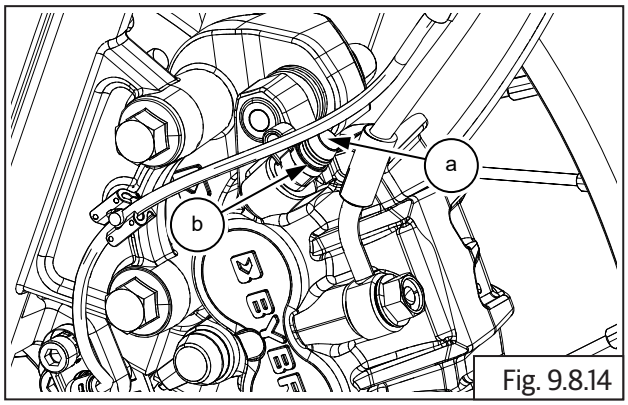

Fig. 9.8.14

- Install reservoir diaphragm **(a)** into front brake reservoir tank **(b)**.

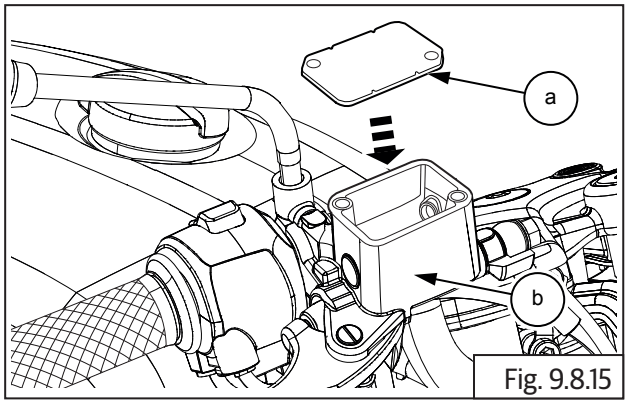

Fig. 9.8.15

- Locate and tighten 2 Nos. screws **(a)** into front brake reservoir tank **(b)**.

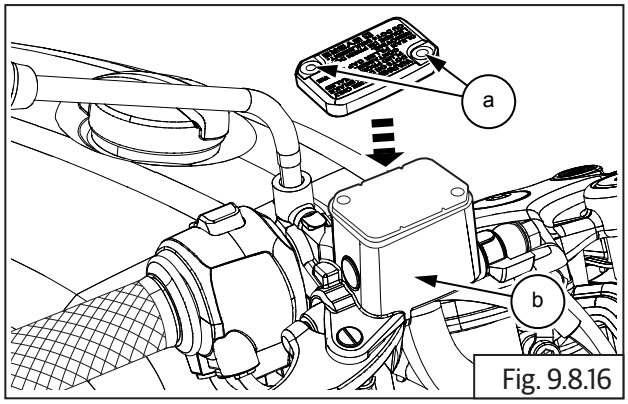

Fig. 9.8.16

	Screw driver

9.8.2. Front Brake Fluid Leakage

⚠ CAUTION

Ensure motorcycle is placed on a flat surface resting it on ramp/center stand.

NOTE

- *Inspect fluid level at every 5000 Km (300 miles). Replace fluid after 25000 Km (1500 miles).*

- Inspect fluid level, visible in window glass on front reservoir tank **(a)**.
- Ensure brake fluid level is always above 'MIN' mark **(b)** on window.

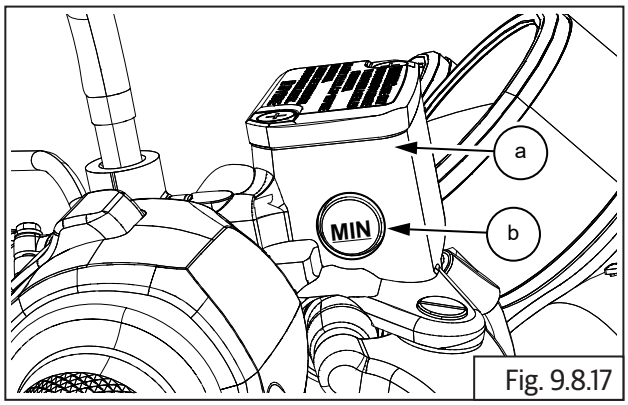

Fig. 9.8.17

- If oil level is below 'MIN', inspect leakage at front brake hoses and front master cylinder banjo bolt.

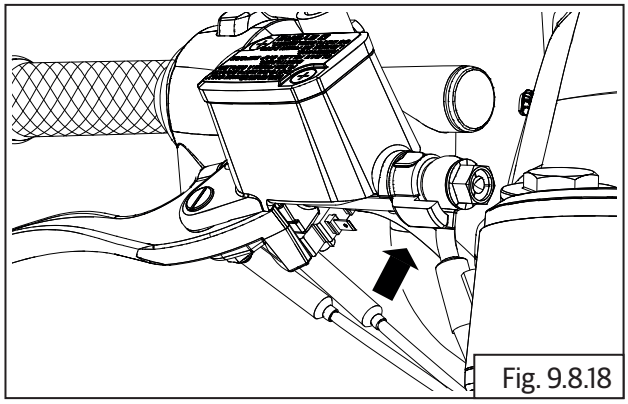
Fig. 9.8.18

- Inspect leakage at caliper banjo bolt.

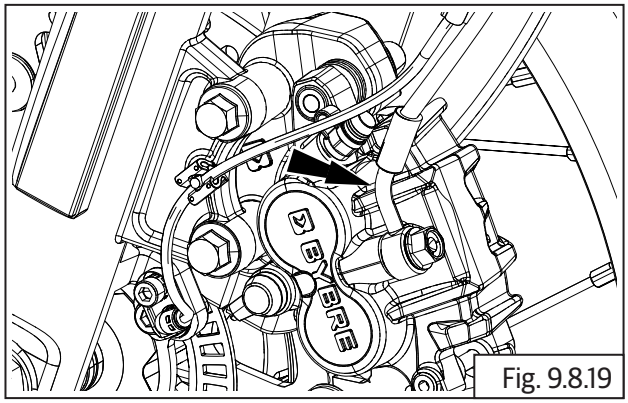
Fig. 9.8.19

- Inspect leakage on brake disc from caliper piston.

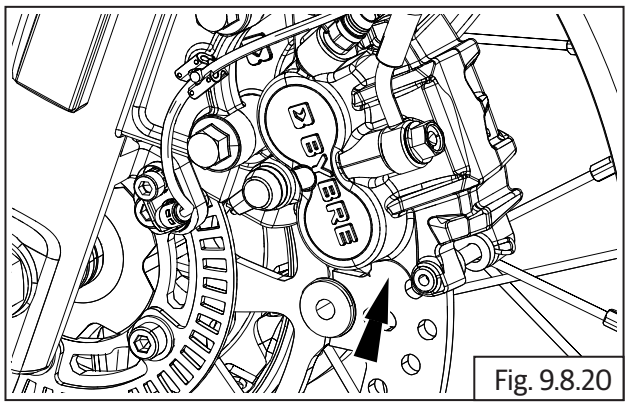
Fig. 9.8.20

- Inspect fluid leakage at hoses at ABS modulator.

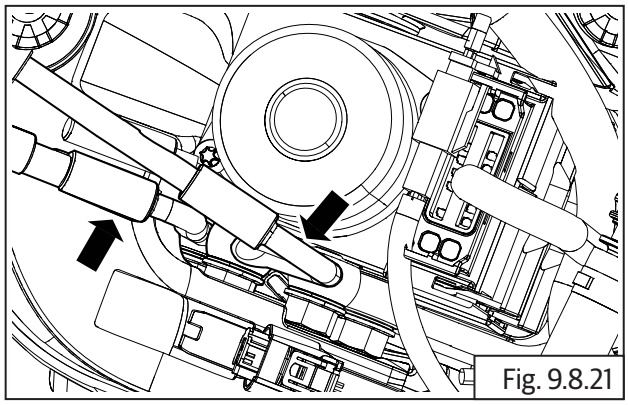
Fig. 9.8.21

9.8.3. Front Brake Fluid Top up

- Loosen and remove 2 Nos. screws **(a)** from front brake reservoir tank.

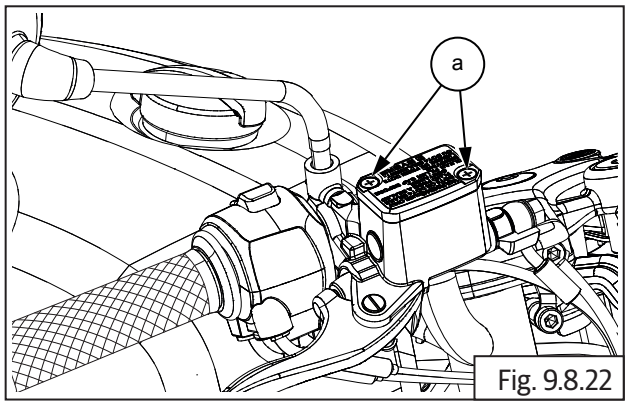

Fig. 9.8.22

	Screw driver

- Remove reservoir cap **(a)** from front brake reservoir tank **(b)**.

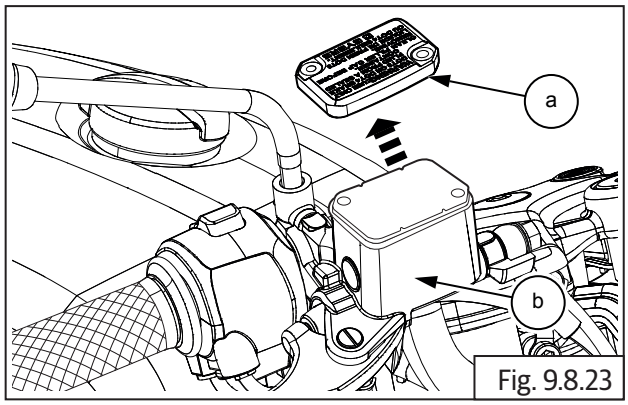

Fig. 9.8.23

- Remove reservoir diaphragm **(a)** from front brake reservoir tank **(b)**.

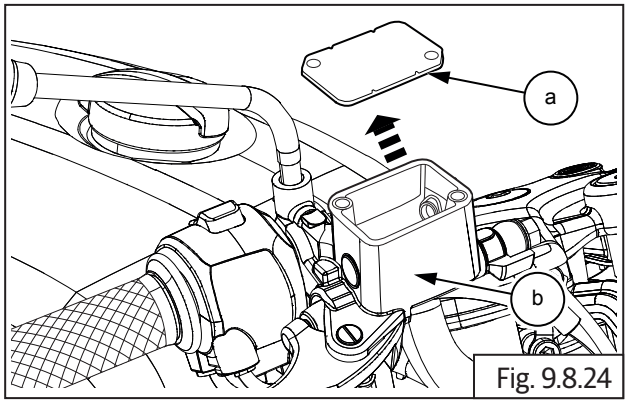

Fig. 9.8.24

- Top up fresh fluid **(a)** into reservoir tank **(b)** up to 'MAX' mark on the window.
- Do not over fill as it may cause malfunctioning of some parts due to brake fluid spillage.

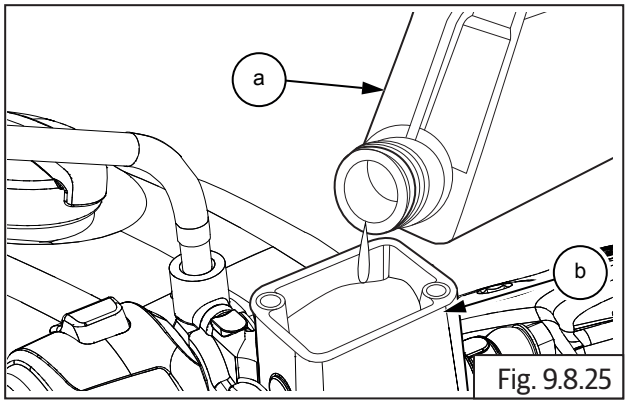

Fig. 9.8.25

9.8.4. Rear Brake Bleeding

⚠ CAUTION

Ensure the motorcycle is upright on a firm and flat surface.

Support motorcycle with suitable equipment below cradle frame.

- Rear brake reservoir is located near rear wheel on cradle frame.
- Open rear brake reservoir cap **(a)** from reservoir **(b)**.

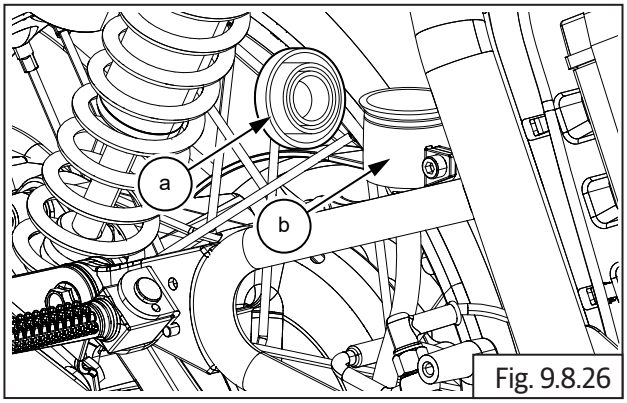

Fig. 9.8.26

NOTE

- *Use brake fluid from sealed containers only.*
- *Use only DOT4 specification brake fluid listed in technical specification Information (section 2.4).*

- Fill fresh brake fluid **(a)** into reservoir **(b)**.

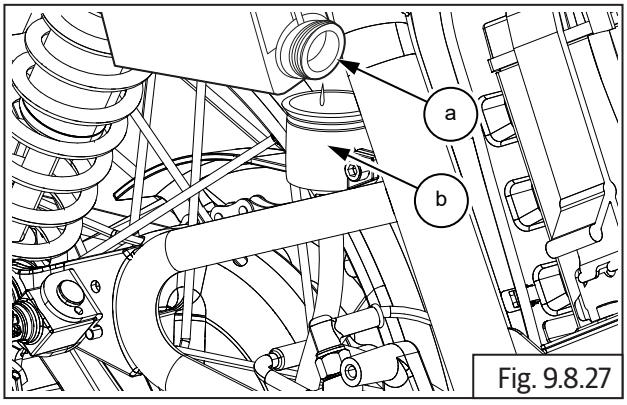

Fig. 9.8.27

- Do not over fill as it may cause malfunctioning of some parts due to brake fluid spillage.
- Locate the reservoir cap **(a)** on the tank and ensure it is seated properly.

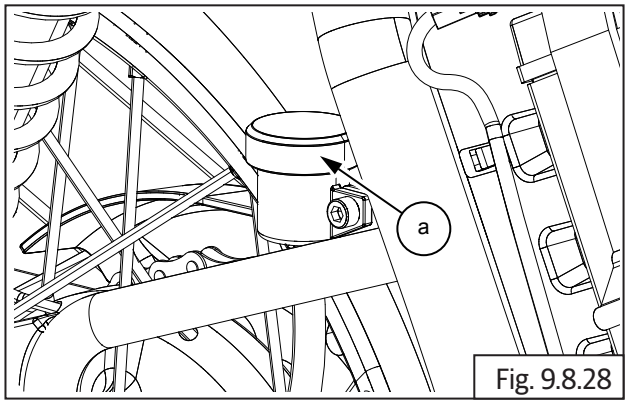

Fig. 9.8.28

- Locate rear brake bleeder valve on rear wheel brake caliper, behind silencer.
- Open rubber cap **(a)** from rear brake bleeder valve **(b)**.

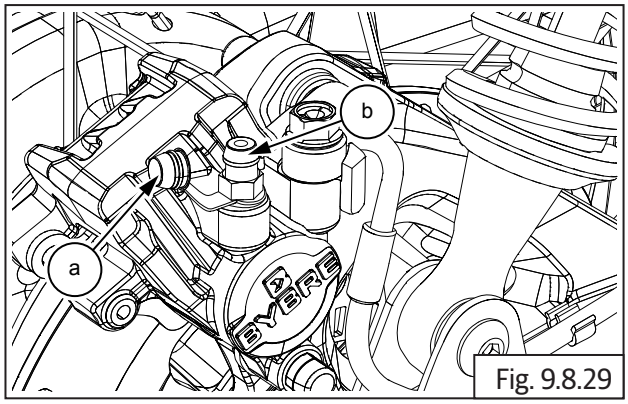

Fig. 9.8.29

- Dip bleeder hose **(a)** one end into a container **(b)** with fresh brake fluid to avoid air passage into bleeder valve.
- Insert bleeder hose other end into bleeder valve **(M6) (c)** on front caliper to drain used oil.

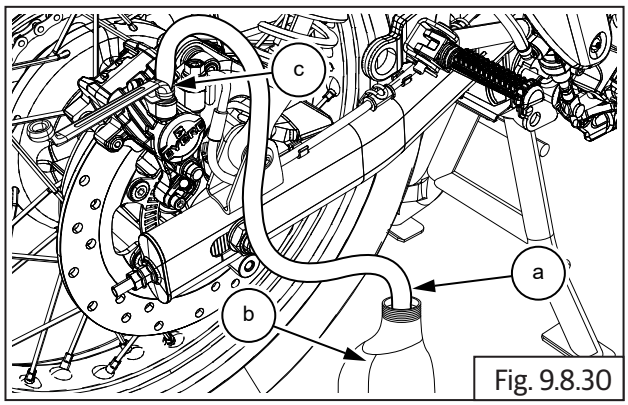

Fig. 9.8.30

	11 mm Ring spanner

- Gently pump rear brake pedal **(a)** until pumping becomes hard and then hold it in place.

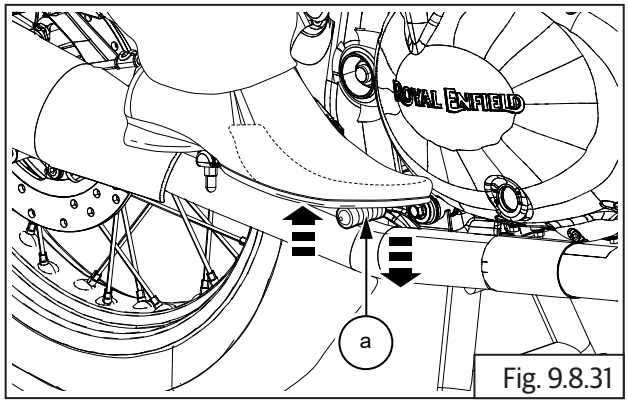

Fig. 9.8.31

- While holding brake, quickly open and close bleeder valve **(M6) (a)**.

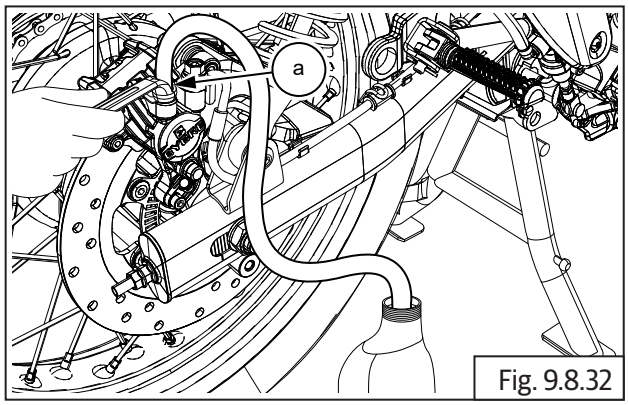

Fig. 9.8.32

- Repeat this operation until air from system is released completely.
- Inspect brake lever efficiency.

NOTE

- *The fluid level must be checked often during the bleeding operation and top up with fresh brake fluid as necessary.*
- *Gently tap brake hose for proper bleeding performance.*
- *Check brake fluid level after completion of brake bleeding.*

- Remove bleeder hose **(a)** from bleeder valve on rear caliper.

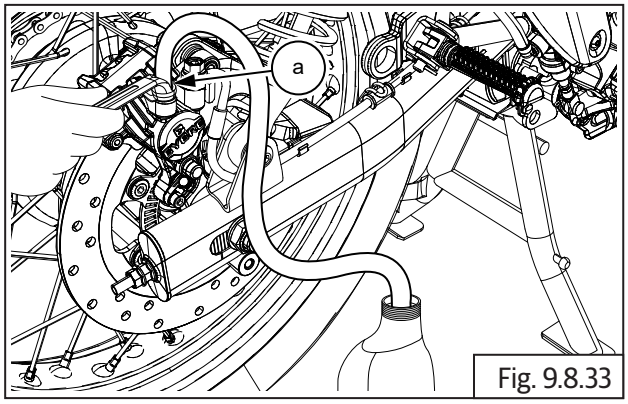

Fig. 9.8.33

- Close bleeder valve **(a)** rubber cap **(b)**.
- Ensure cap is locked properly to avoid exposure to dust or mud.

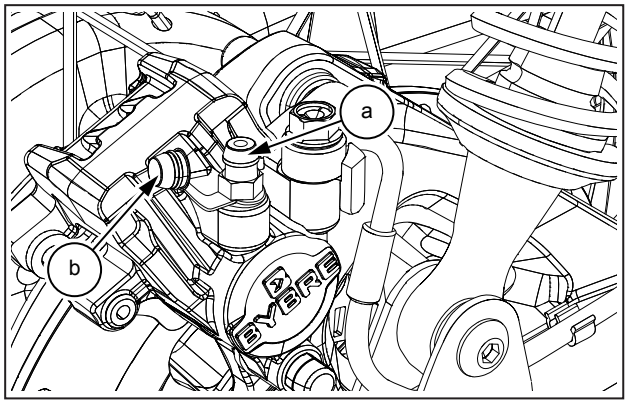

Fig. 9.8.34

9.8.5. Rear Brake Fluid Leakage

! CAUTION
Ensure the motorcycle is upright on a firm and flat surface.

NOTE
• *Inspect fluid level at every 5000Km (3000 miles). Replace fluid after 25000Km (15000 miles).*

- Inspect fluid level visible on rear reservoir tank.
- Ensure brake fluid level in rear reservoir tank is always between 'MIN' and 'Max' marks.

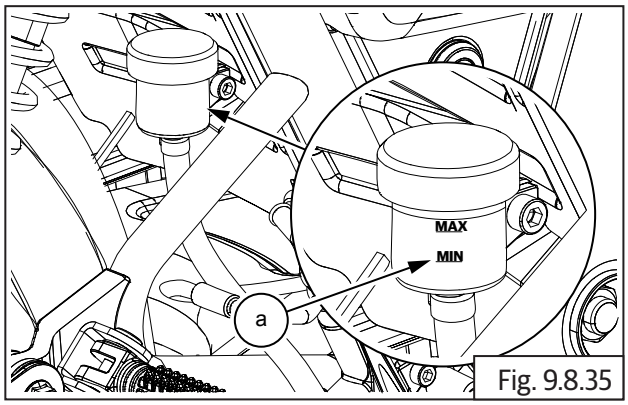

Fig. 9.8.35

- If oil level is below 'MIN', inspect leakage at rear brake hoses and rear master cylinder banjo bolt.

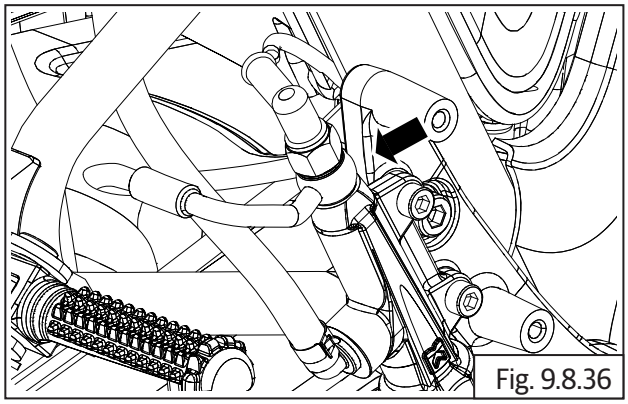
Fig. 9.8.36

- Inspect leakage at rear caliper banjo bolt.

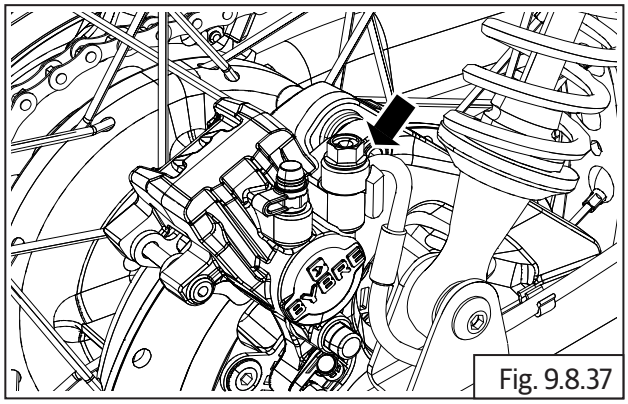
Fig. 9.8.37

- Inspect leakage on brake disc from caliper piston.

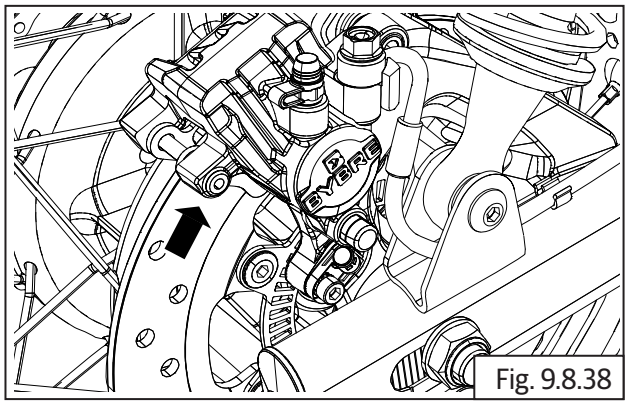
Fig. 9.8.38

- Inspect fluid leakage at hoses on ABS modulator.

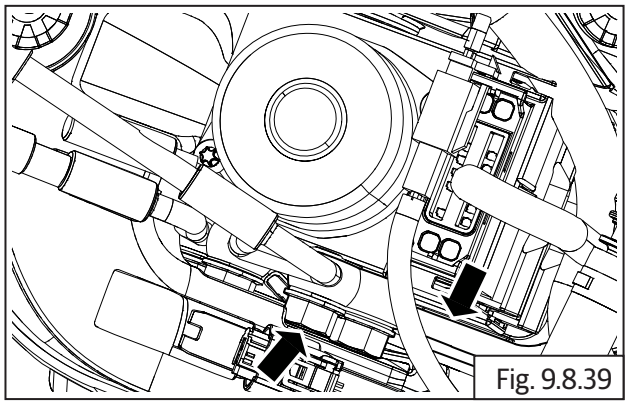
Fig. 9.8.39

9.8.6. Rear Brake Fluid Top Up

- Open rear brake reservoir cap **(a)** from reservoir **(b)**.

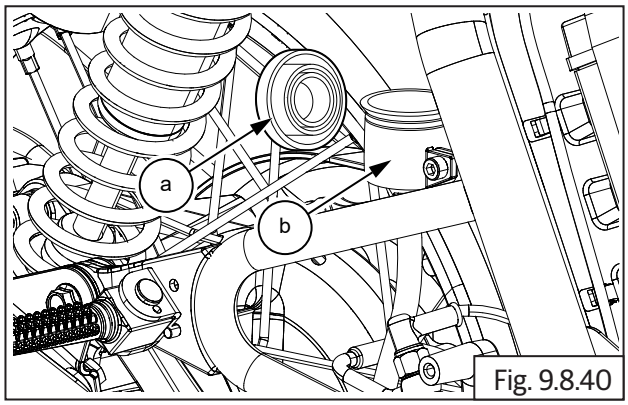

Fig. 9.8.40

- Top up fresh brake fluid **(a)** into reservoir tank **(b)** only up to MAX level. Do not over fill as it may cause malfunctioning of some parts due to brake fluid spillage.

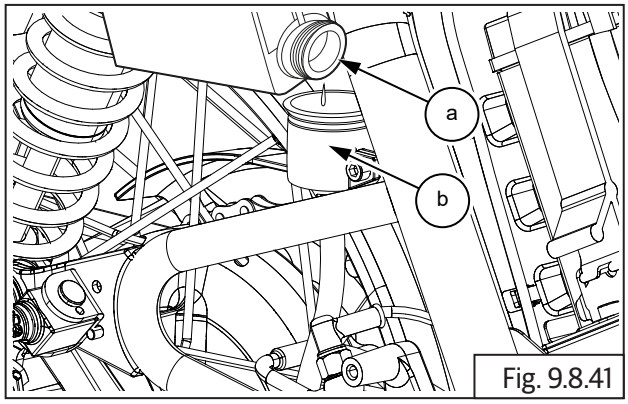

Fig. 9.8.41

- Locate the reservoir cap **(a)** on the tank and ensure it is seated properly.

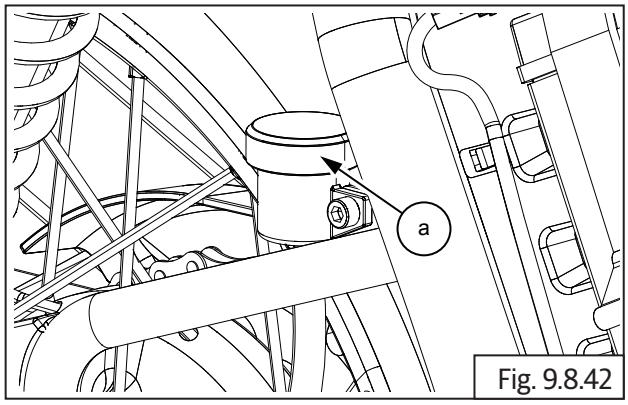

Fig. 9.8.42

ENGINE MANAGEMENT SYSTEM (EMS)

CONTENTS PAGE

10. Engine Management System (EMS) 615

System Layout 615

EMS Components 615

Functional Specifications 616

1. Electronic Control Unit (ECU) 616

Functional Diagram 616

2. Fuel Injectors 617
3. Fuel Supply Module 617
4. Throttle Position Sensor 617
5. Manifold Absolute Pressure Sensor (MAP) 618
6. Canister Purge Valve 618
7. HEGO Sensor (HEGO / O2) 619
8. Idle Air Control Valve (IAC) 619
9. Secondary Air Injection Solenoid (SAI) 620
10. Engine Oil Temperature Sensor (EOT) 620
11. Intake Air Temperature Sensor (IAT) 620
12. Clutch Switch 621
13. Side Stand Switch 621
14. Gear Position Sensor (GPS) 621
15. Roll Over Sensor 622
16. Crank Position Sensor (CPS) 622
17. Starter Motor Relay 623

10.1 Engine Management System (EMS) 624

Dismantling 624

10.1.2. Fuel Pump 625
10.1.3. Manifold Absolute Pressure Sensor (MAP) 626
10.1.5. Throttle Position sensor (TPS) 628
10.1.6. Fuel Injectors 628
10.1.7. Idle Speed Control (ISC) 629
10.1.8. Engine Oil Temperature Sensor (EOT) 629
10.1.9. HEGO (O2) Sensor 630
10.1.10. Intake Air Temperature (IAT) 631

CONTENTS PAGE

10.1.11. Secondary Air Injection Unit (Solenoid) or Air Cut Valve (ACV) 632
10.1.12. Purge Valve 633
10.1.13. Roll Over Sensor 634
10.1.14. Ignition Coil 635
10.1.15. Ignition Coil LH and RH from bracket 636
10.1.1.6 Crank Position Sensor 637
10.1.17. Gear Position Sensor 638
10.1.18. Clutch Switch 639
10.1.19. Side Stand Switch 639
10.1.20. Starter Motor Solenoid 640

Assembly 640

10.1.21. Engine Control Unit (ECU) 640
10.1.22. Fuel Pump 642
10.1.23. Fuel injectors 642
10.1.24. Manifold Absolute Pressure Sensor (MAP) 643
10.1.25. Idle Speed Controller (ISC - Stepper Motor) 644
10.1.26. Throttle Body 645
10.1.27. Throttle Position sensor (TPS) 645
10.1.28. Engine Oil Temperature Sensor (EOT) 645
10.1.29. HEGO (O2) Sensors 646
10.1.30. Intake Air Temperature sensor (IAT) 647
10.1.31. Secondary Air Injection Unit (Solenoid) Air Cut Valve (ACV) 648
10.1.32. Purge Valve 649
10.1.33. Roll Over Sensor 649
10.1.34. Ignition Coil 650
10.1.35. Crank Position Sensor 651
10.1.36. Gear Position Sensor 652
10.1.37. Clutch Switch 653
10.1.38. Side Stand Switch 654
10.1.39. Starter Motor Solenoid 654
10.1.40. Actuator 655

10.2 EMS DTC Codes 658

10. Engine Management System (EMS)

Engine Management System is responsible for controlling the amount of fuel being injected and for adjusting the ignition timing. Optimum functioning of EMS assures maximum engine power with the lowest amount of exhaust emissions and lowest fuel consumption.

System Layout

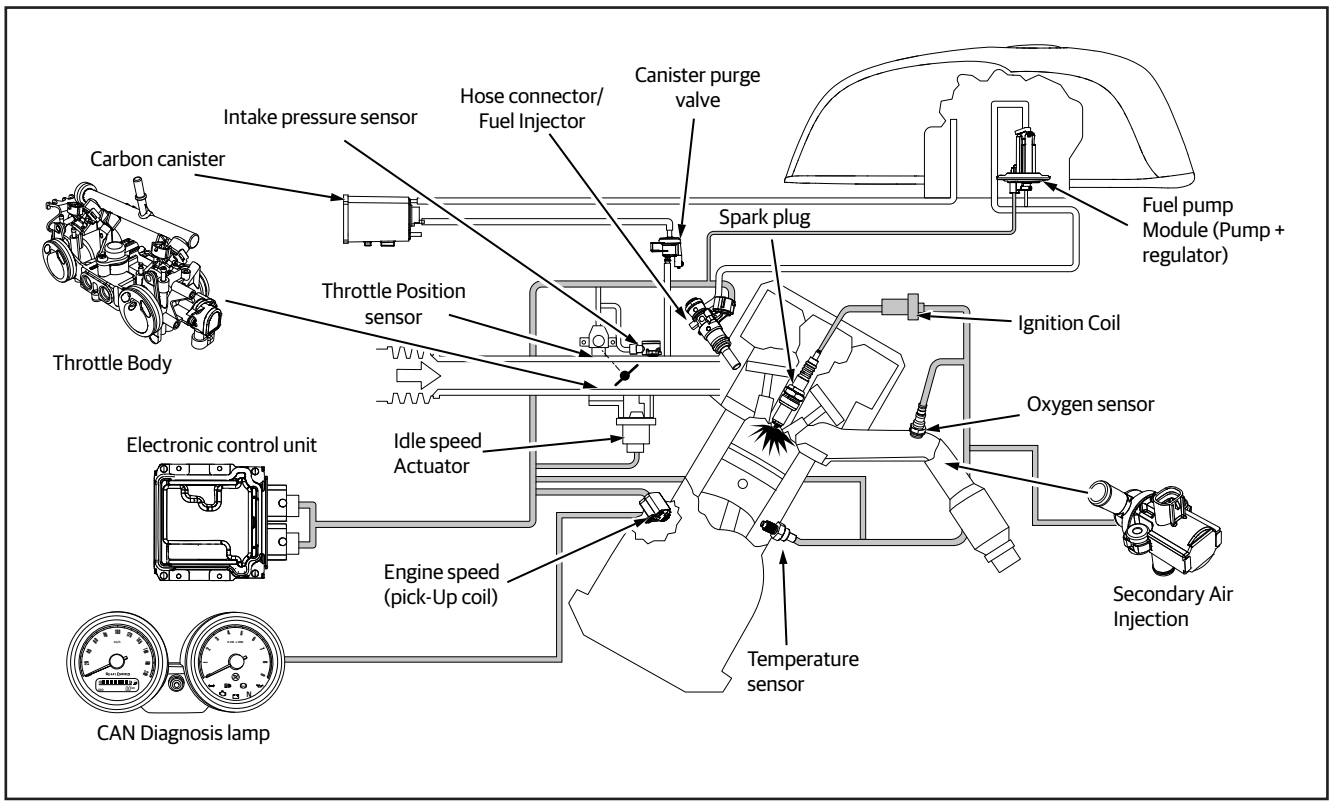

EMS Components

- Electronic Control Unit
- Fuel Injector
- Fuel Supply Module
- Throttle Position Senor
- Manifold Pressure Sensor
- Canister Purge Valve
- HEGO (O2) Sensor
- Idle Air Control Valve
- Secondary Air Injection Solenoid
- Engine Oil Temperature Sensor
- Intake Air Temperature Sensor
- Clutch Switch
- Side Stand Switch
- Gear Position Sensor
- Roll Over Sensor
- Crank Position Sensor
- Starter Motor Relay

Functional Diagram

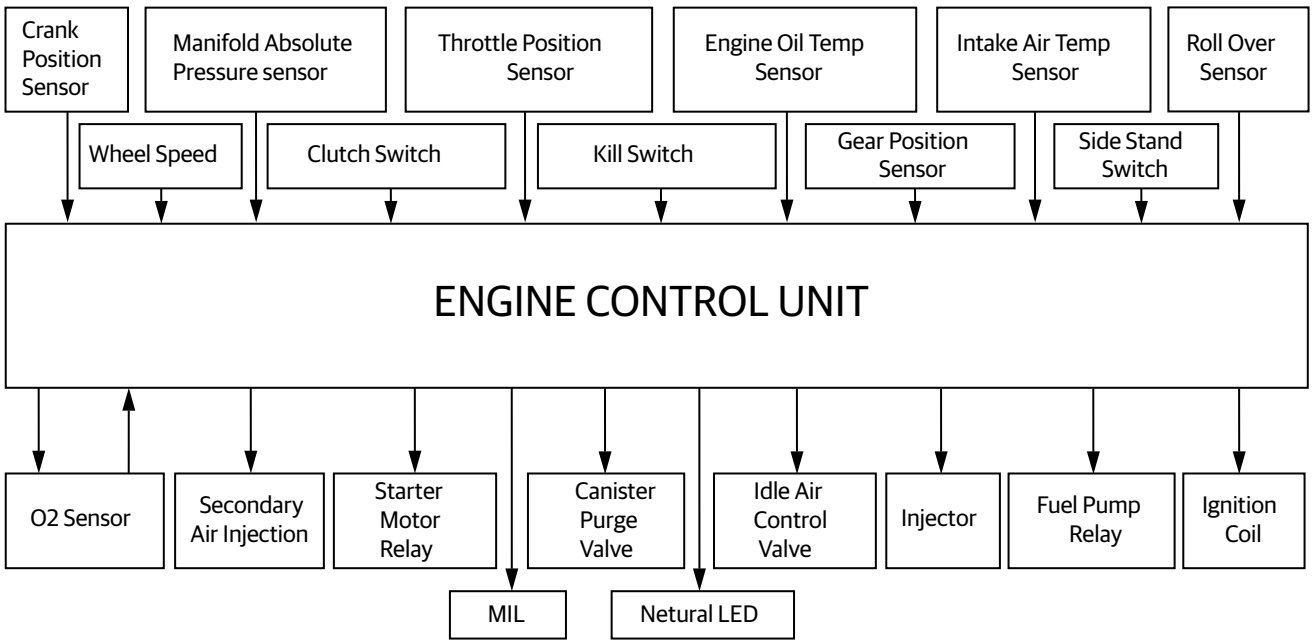

Functional Specifications

1. Electronic Control Unit (ECU)

Electronic Control Unit is any embedded system that controls one or more electrical system or subsystems in a vehicle. Engine Control Unit is a type of Electronic Control Unit that controls a series of actuators on an internal combustion engine to ensure optimal engine performance. It does this by reading values from a multitude of sensors within the engine bay, interpreting the data using multidimensional performance maps (called lookup tables), and adjusting the engine actuators accordingly.

Key Elements:

1.Micro Controller

2.Memory

3.Inputs

4.Outputs

5.Communication Links

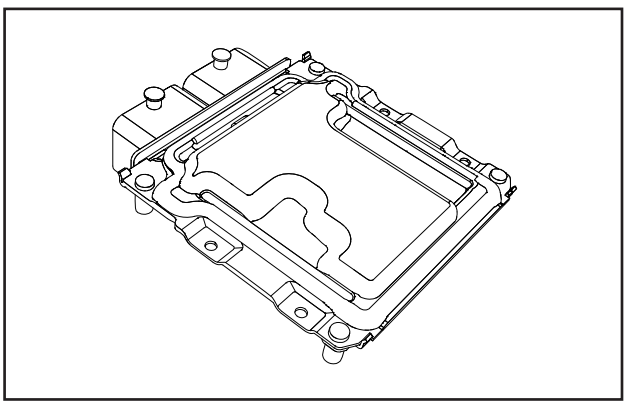

Specification:

Operating Voltage: 9 to 16 V

Operating temperature: -40ºC to 70ºC

2. Fuel Injectors

Fuel injectors that use pintle valves are operated by electromagnetic components called solenoids. The solenoid is activated, or "pulses" by an ECU which causes it to undergo linear movement.
Since the solenoid is mechanically connected to a pintle valve within the fuel injector, the linear movement causes the pintle to move away from its seat. A small amount of highly pressurized fuel then sprays from the pintle nozzle.

Specification:

Resistance: 12Ω ± 0.6Ω at 22 ± 3°C

Operating Voltage : 6 to 16 V

Operating Pressure: 350 ± 3.5 kPa

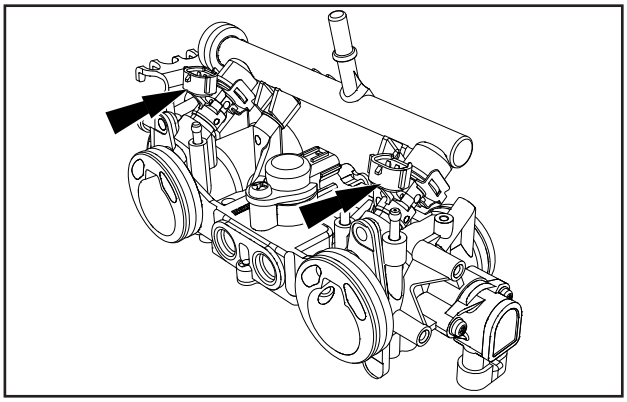

3. Fuel Supply Module

The inlet filter filters the minute dust particles and supplies fuel to the feed pump. The feed pump creates positive pressure in the fuel lines, pushing the gasoline to the injector. The benefit of placing the pump inside the tank is that it is less likely to start a fire. Though electrical components (such as a fuel pump) can spark and ignite fuel vapours, liquid fuel will not explode and therefore submerging the pump in the tank is one of the safest places to mount. The pressure regulator maintains a constant pressure of 350 kpa by returning the surplus fuel back into the tank.

Specification:

Operating Voltage: 8 to 16 V

Operating Fuel Pressure: 350 ± 2 kPa

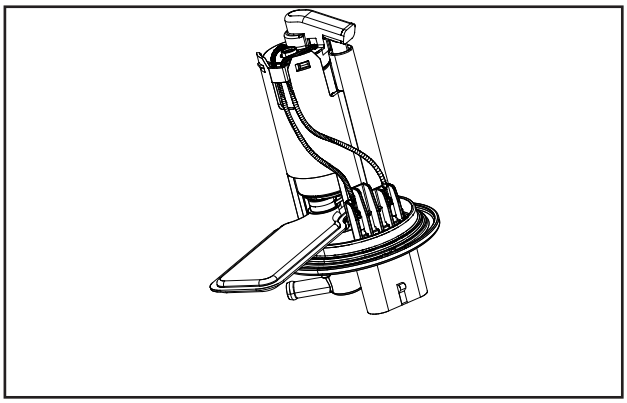

4. Throttle Position Sensor

A Throttle Position Sensor (Tps) is used to monitor the position of the throttle operation and is located on the butterfly spindle so that it can directly monitor the position of the throttle. The sensor is a potentiometer type and therefore provides a variable resistance depending upon the position of the butterfly valve and hence throttle position can be sensed by the ECU. The sensor signal is used by the ECU as an input to its control system. The ignition timing and fuel injection timing (and potentially other parameters) are altered depending upon the position of the throttle, and also depending on the rate of change of the position.

The ECU uses the throttle valve position to know:

- Engine mode: Idle, Part Throttle, Wide-Open Throttle.
- Air-fuel ratio correction.
- Acceleration/ Deceleration correction.

Specification:

Supply Voltage: 5 V

Total Resistance: 2000 ± 600 Ω (Across pins 126 & 207)

Voltage at idle: 0.7 ± 0.35 V

Voltage at WOT: 4.49 to 4.84 V

Note: To see signal, check Voltage across the pins 203 & 207

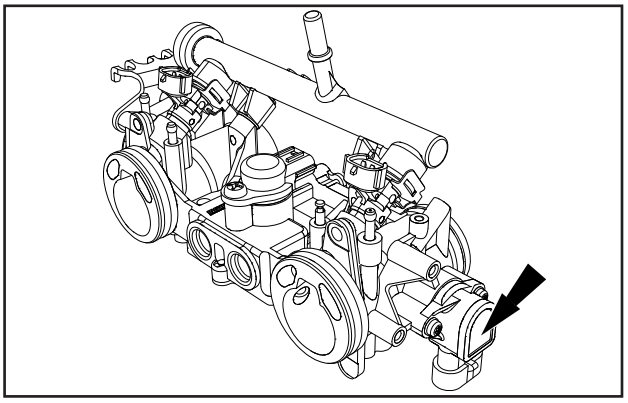

5. Manifold Absolute Pressure Sensor (MAP)

The Manifold Absolute Pressure sensor provides instantaneous manifold pressure information to the ECU. This is necessary to calculate air density to determine the required fuel metering for optimum combustion and influence the advance or retard of ignition timing. It is mounted under the fuel tank on frame.

Specification:

Supply Voltage: 5 V

Pressure Range: 10 to 115 kPa

Temperature Range: -40°C to 130°C

Note: To see signal, check Voltage across the pins 112 & 103

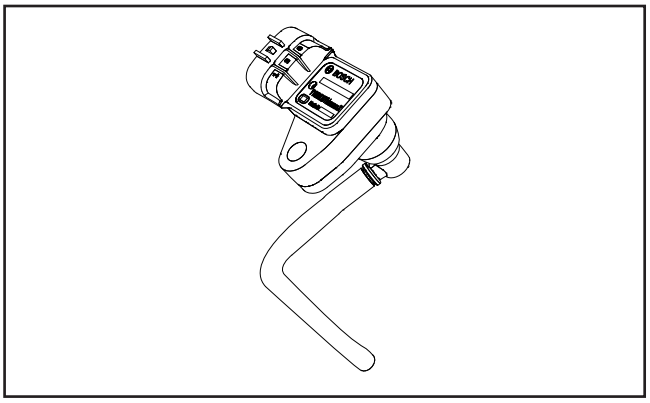

6. Canister Purge Valve

The purge valve is the part of the vehicle Evaporative Emission Control (EVAP) system. The EVAP system prevents fuel vapors in the fuel tank from escaping into the atmosphere. The EVAP system traps fuel vapors from the fuel tank and temporarily stores them in the charcoal canister, see the diagram. When the engine is running under certain conditions, the fuel vapors are purged from the canister and burned inside the engine. The purge valve precisely controls the amount of fuel vapor that is purged from the charcoal canister. It opens only when engine oil >75º c and HEGO sensor "Controller ON".

Specification:

Valve: Normally Closed

Resistance: 16 ± 2Ω @ 23 ± 5°C

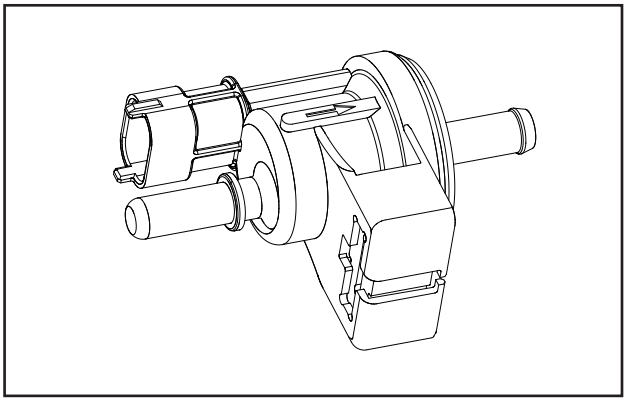

7. HEGO Sensor (HEGO / O2)

The Heated Exhaust Gas Oxygen sensor detects the presence of oxygen in the exhaust and produces a variable voltage according to the amount of oxygen detected. The O2 sensor provides feedback to the ECU indicating air/fuel ratio in order to achieve a near stoichiometric air/fuel ratio of 14.7 : 1 during closed loop engine operation. The ideal mixture is the amount of fuel needed to make an engine perform as commanded by the ECU.

The HEGO sensor is a voltage generator which is installed upstream from the catalytic converter. The heated exhaust gas oxygen sensor will generate a voltage signal that is characteristic of this ideal stoichiometric ratio. The HEGO sensor operates as a reference-gas sensor, and compares the residual oxygen in the exhaust gas with the oxygen in the reference atmosphere (air circulating inside the sensor). The active sensor ceramic is heated by the internal heating element; thus sensor heating reduces the influence of the exhaust gas temperature on the sensor-ceramic temperature and therefore the temperature-dependent sensor. Reliable signals working temperature from 300ºc to 900ºc maximum.

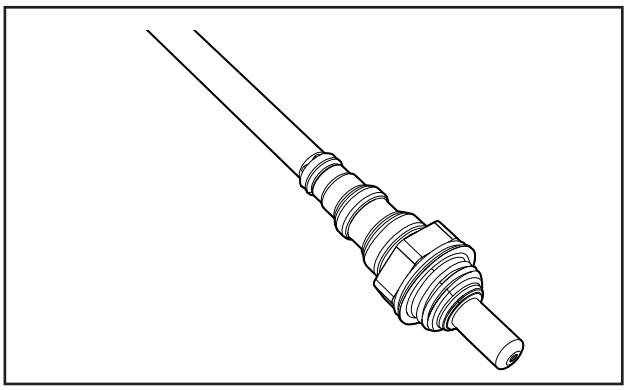

Specification:

Operating Voltage: 16 V (Max)

Operating temperature: 600ºC to 950ºC

8. Idle Air Control Valve (IAC)

Idle Air Control Valve is basically a stepper motor controlling the bypass air to the engine and helps to idle and cold start the engine without difficulties. The ECU accordingly collects the data from the engine oil temperature and intake air temperature sensors and operates the stepper motor in regulating the engine RPM. This allows the engine's idle speed to be maintained constant. It is mounted on throttle body.

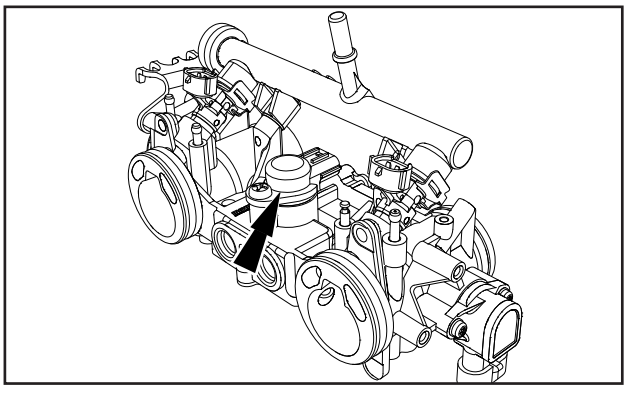

Specification:

Operating Voltage: 8 to 16 V

Working temperature - 10ºC

High altitude range - upto 5000 meter

NOTE: 1. To meet target emission

2. To meet evaporative emission.

9. Secondary Air Injection Solenoid (SAI)

Secondary air injection solenoid is used to reduce the tailpipe emissions by burning the unburnt fuel in the exhaust. The solenoid is connected over the top of the air filter box and has a hose leading to the reed valve located in the exhaust port. During the negative pulses in the exhaust, fresh air is drawn into the exhaust stream thereby creating combustion of unburnt gases. The solenoid is controlled by ECU and pulsed when the operating conditions are met.

Specification:

Valve: Normally Open

Resistance: 20 to 24Ω @ 20 to 30°C

Operating Voltage : 10 to 14.5 V

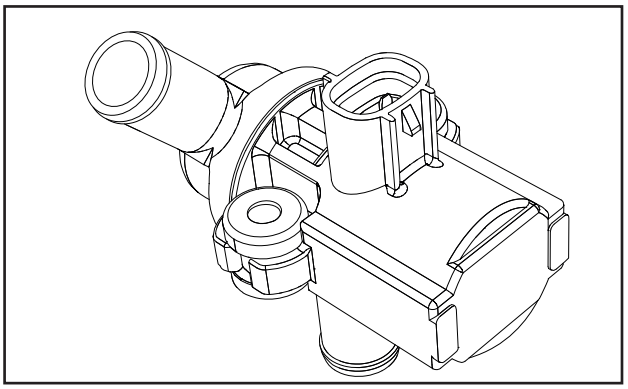

10. Engine Oil Temperature Sensor (EOT)

Engine oil temperature sensor is thermistor whose resistance is dependent on temperature. It has a Negative Temperature Coefficient where the resistance decreases with increase in temperature. It gives the average temperature of the engine oil to the ECU for making corrections in the injection quantity, ignition timing and for adjusting the stepper opening for better idle stability. It is mounted in LH of cylinder head.

Specification:

Operating Temperature: -55 to 250°C

Supply Voltage: 5 V

Pin Out Voltage: 2.7734 V @ 39.6°C
(Across Pins 215 & 106)

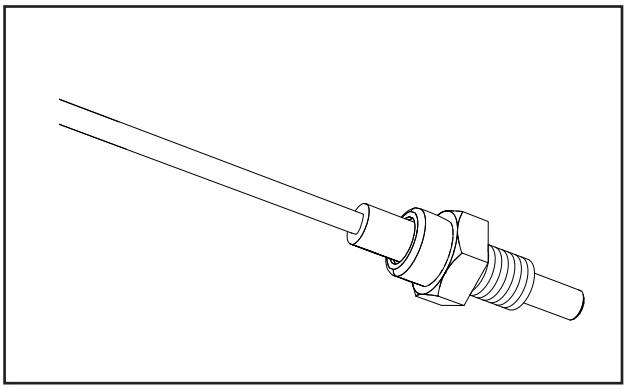

11. Intake Air Temperature Sensor (IAT)

Intake air temperature sensor is also a Negative Temperature Coefficient sensor where the resistance decreases with increase in temperature. It gives the information about ambient air temperature to the ECU for making corrections in the injection quantity and ignition timing. It is mounted on airfilter box top right corner.

Specification:

Operating Temperature: -55 to 125°C

Supply Voltage: 5 V

Pin Out Voltage:1.777 V @ 39.8°C
(Across Pins 227 & 105)

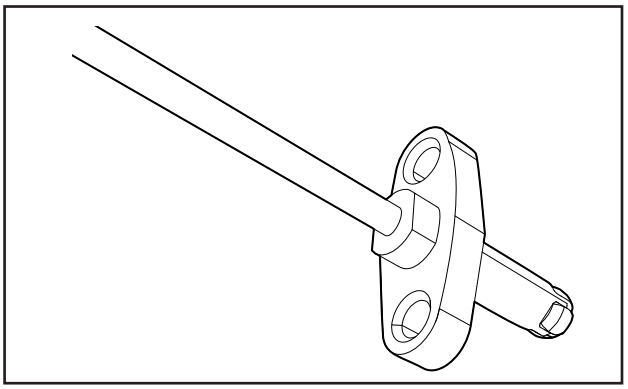

12. Clutch Switch

Clutch switch gives information to the ECU about the clutch status (i.e) engaged or disengaged with the gearbox. The clutch switch gives digital input to the ECU (i.e) 0 or 1 which will help in starting of the vehicle when the engine is not in neutral gear. It is mounted under the LH switch module at handle bar.

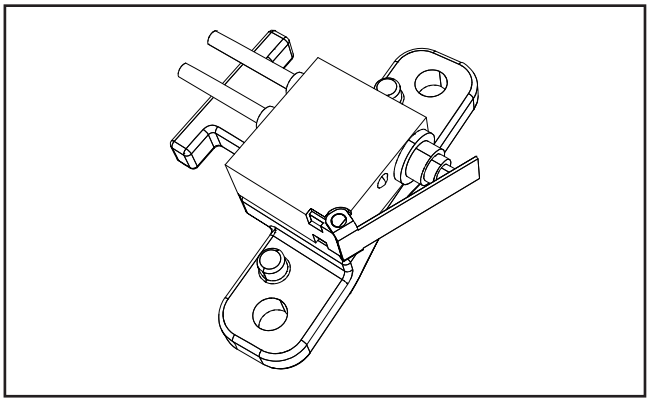

13. Side Stand Switch

Side stand switch prevents the vehicle from starting when the side stand is down and not in neutral gear. It is HALL - IC type switch, which is directly connected to ECU.

Specification:

(Across Pins 226 & 208)

Side stand down: 2.80 to 4.05 V

Side stand up: 0.35 to 1.15 V

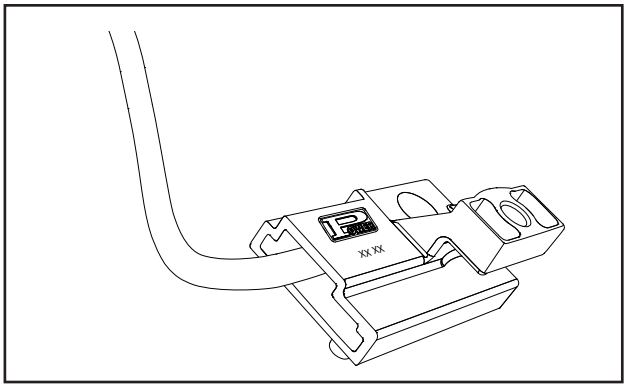

14. Gear Position Sensor (GPS)

Gear Position Sensor indicates the ECU, the gear in which the vehicle is operated at that instant. The input is also required for drive ability calculations in the ECU.
During neutral gear position a light will glow in instrument cluster.
Operating temperature: -25°c to +150°c

Specification:

(Across Pins 123 & 208)

Neutral gear: 0.37 to 1.16 V

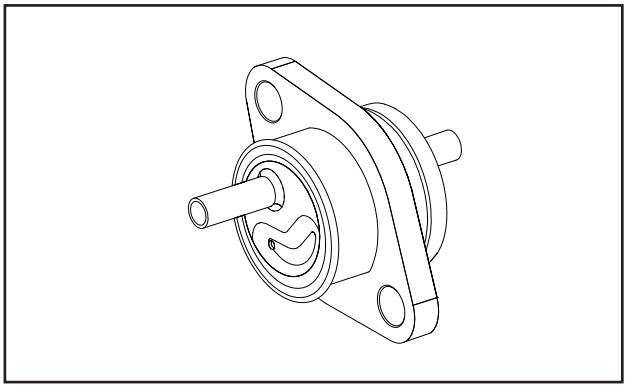

15. Roll Over Sensor

Roll over sensor is also known as bank angle sensor. This sensor gives signal to the ECU if the vehicle rolls off during any mishap or accident. The ECU then cuts off the supply to the fuel injector and the spark plug thus stalling the vehicle, due to which further major mishap is avoided. It is mounted under the seat on the vehicle above battery box.

Specification:

(Across Pins 225 & 114)

Voltage when vehicle is upright: 0.36 to 1.5 V

Voltage during a fall: 3.75 to 4.35 V

Banking angle: 45 degrees

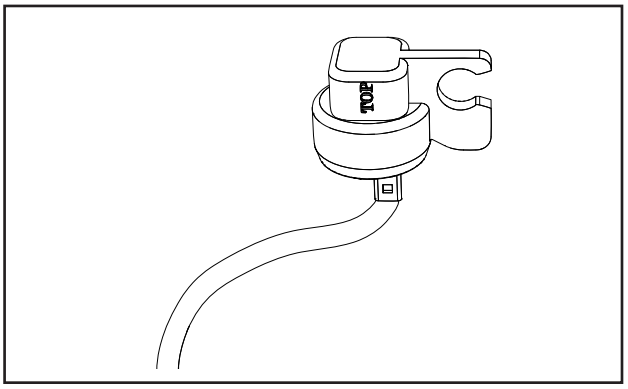

16. Crank Position Sensor (CPS)

It provides an alternating electrical pulse to the ECU, to determine crankshaft speed and TDC position of the piston in compression stroke. This input will help the ECU to optimize both fuel injection as well as Ignition advance required to suit the crankshaft rotation speed (RPM).
In the event throttle is wide open, leading to crankshaft speed above 5500 RPM, the high frequency electrical pulses from the crank position sensor will prompt the ECU to restrict fuel supply so that the crank speed reduces to safe levels. This is a safety aspect to prevent damage to moving engine parts. CPS is located inside the engine cover LH, under the stator coil.

Specification:

Output Voltage: 3 - 5 V AC

Resistance : $215\Omega \pm 10\Omega$

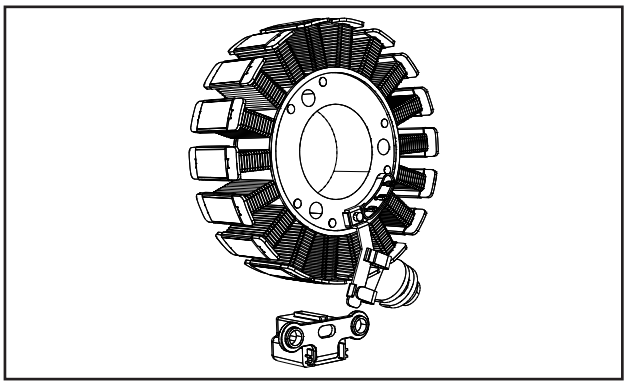

17. Starter Motor Relay

The starter motor is activated by a solenoid, whenever the starter button is depressed to start the engine.

While cranking, when the crank speed attains 600 RPM the ECU commands the starter solenoid to disconnect the power supply to the starter motor so that is will stop spinning.

Also in case the engine does not start within 15 seconds of depressing the starter button, the solenoid will disconnect power supply to the starter motor and will reset to normal condition only after the starter switch is released and after a time delay of about 5 seconds and Crank is at Zero RPM

This is a safety feature to safeguard the starter motor, solenoid and the starter clutch.

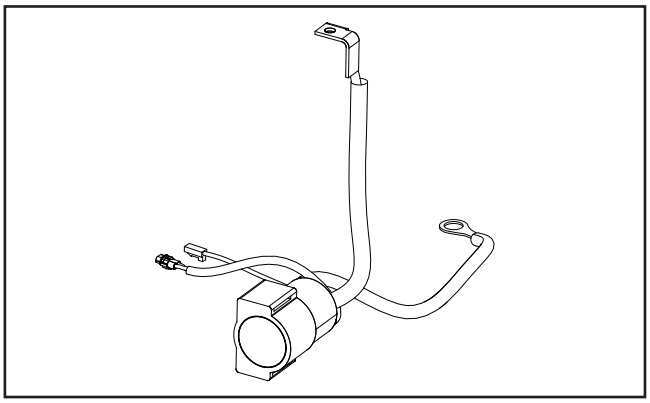

Specification:

Operating Voltage: 8 to 16 V

10.1 Engine Management System (EMS)

Dismantling

10.1.1. Engine Control Unit (ECU)

⚠ CAUTION

Before disconnecting ECU from the wiring harness, the battery terminals must be disconnected from the battery.

- Ensure the ignition switch and stop switch are in OFF position.
- Remove the following:
  - Side panel RH (section 6.7.1).
  - Side panel LH (section 6.7.4).
  - Seat from frame (section 6.7.2).
- Disconnect battery terminals (section 11.5.1).
- ECU is main part of EMS and is located below seat assembly.
- Loosen and remove 4 Nos. flange Torx head screws **(T20) (a)** holding ECU **(b)** to infill cover.

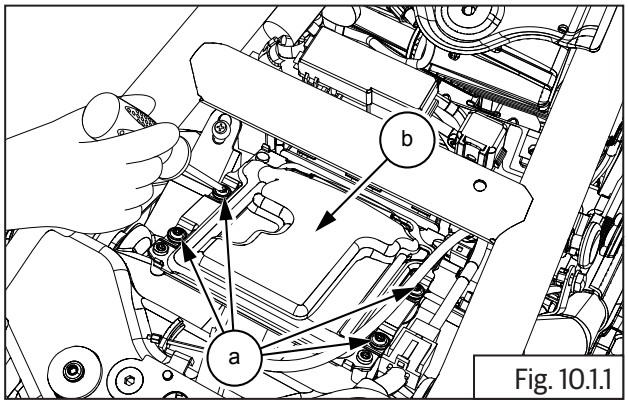

Fig. 10.1.1

	T20 Torx Screw driver

- Slightly lift up ECU and disconnect fuse box **(a)** and diagnosis on line (DOL) connector **(b)** with wiring harness from frame.

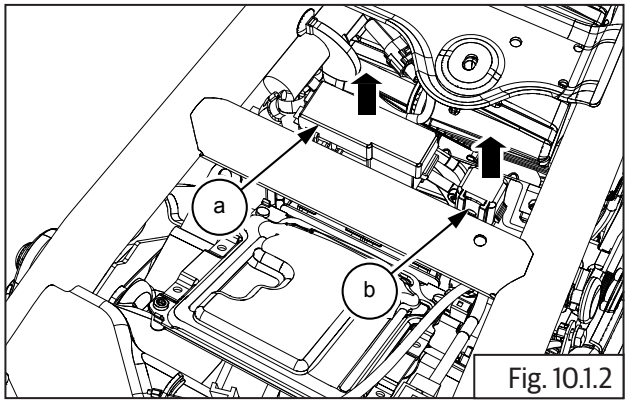

Fig. 10.1.2

⚠ CAUTION

DO NOT lift ECU too much as it will cause damage to the wiring connectors and wiring harness.

- Disconnect wiring harness connectors from ECU and remove ECU from frame. As below instructions.
- Hold ECU firmly.

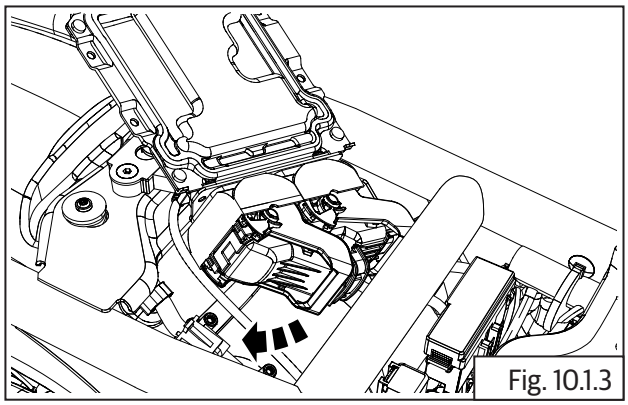
Fig. 10.1.3

- Gently lift and release locks completely from connectors. Disconnect connectors from ECU.

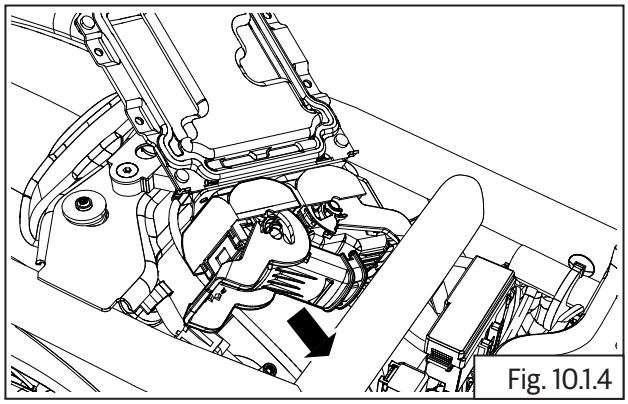
Fig. 10.1.4

- Follow the same procedure for the other connector.

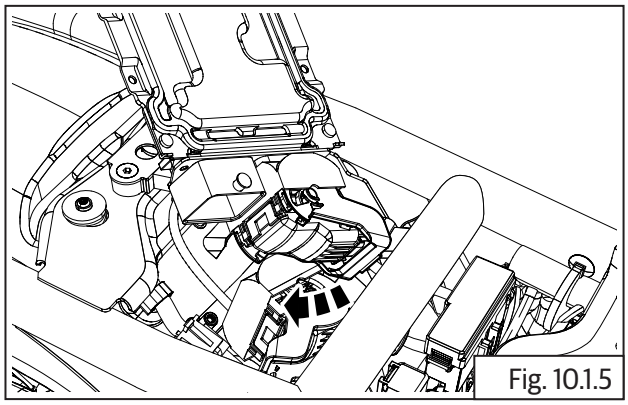
Fig. 10.1.5

- Gently lift and release locks completely from connectors. Disconnect connectors from ECU.

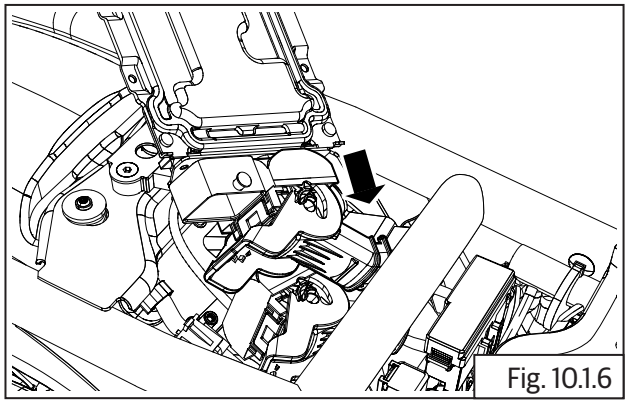
Fig. 10.1.6

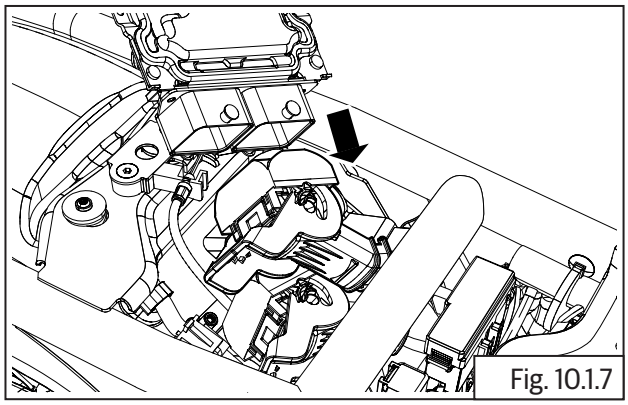
Fig. 10.1.7

⚠ CAUTION

Ensure locks are fully lifted up and released before disconnecting wiring connectors from ECU.

Ensure locks are handled with care and do not get damaged or broken.

Damaged or broken locks will result in loose connections and cause the ECU to fail.

Storage of ECU

Do's & Don'ts

- Store ECU away from any magnetic forces at it will affect the ECU program software and damage ECU.
- Store ECU in a cool and dry place.
- DO NOT allow moisture to affect the ECU.
- DO NOT wash the ECU with water or any solvent.
- Prevent ECU from any external damages.
- DO NOT drop ECU or allow it to fall as internals will get damaged and render the ECU defective.
- DO NOT keep any heavy or sharp objects on ECU as it will damage internals and render the ECU defective.

10.1.2. Fuel Pump

- Ensure Ignition switch and Engine stop switch are in OFF position
- Remove the following parts:
  - Side panel RH (section 6.7.1).
  - Rider seat (section 6.7.2).
  - Fuel tank assembly (section 7.1.1).

⚠ CAUTION

Ensure the following:

Fuel is drained completely from fuel tank.

Fuel feed and return hoses are disconnected from the fuel rail.

Wiring couplers to fuel pump and low fuel sensor are disconnected.

EVAP hose pipes are disconnected.

⚠ WARNING

Gasoline is extremely flammable and highly explosive. Improper handling can lead to fatal accident or serious injury.

- Loosen and remove 6 Nos. Hex socket head bolts **(M5) (a)** holding fuel pump **(b)** to tank **(c)**.

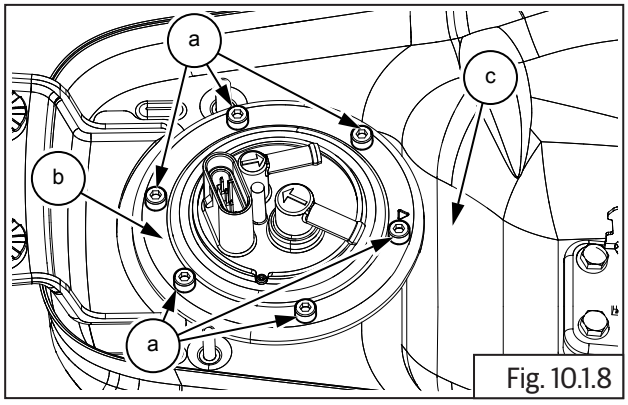

Fig. 10.1.8

	4 mm Socket with Ratchet

- Gently remove fuel pump **(a)** from fuel tank along with O-ring.

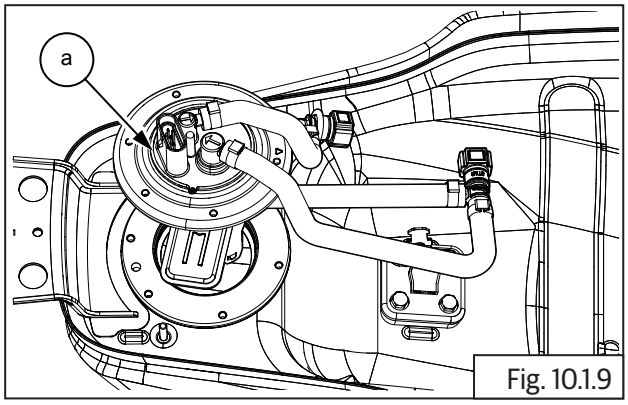

Fig. 10.1.9

10.1.3. Manifold Absolute Pressure Sensor (MAP)

- Ensure ignition switch and engine stop switch are in OFF position
- Remove the following parts:
  - Side panel RH (section 6.7.1).
  - Rider seat (section 6.7.2).
  - Fuel tank assembly (section 7.1.1).

⚠ CAUTION

Ensure the following:

Fuel is drained completely from fuel tank.

Fuel feed and return hoses are disconnected from the fuel rail.

Wiring couplers to fuel pump and low fuel sensor are disconnected.

EVAP hose pipes are disconnected.

⚠ WARNING

Gasoline is extremely flammable and highly explosive. Improper handling can lead to fatal accident or serious injury.

- Remove throttle body cover from the LH side (section 5.1.7).
- Disconnect MAP sensor vacuum hose **(a)** from throttle body.

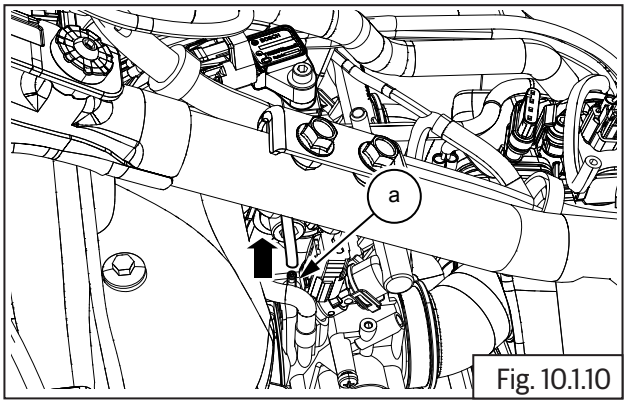

Fig. 10.1.10

- The MAP sensor is fixed to the ABS modulator bracket.
- Loosen and remove Hex socket head bolt **(M5) (a)** along with washer, holding MAP sensor **(b)** to bracket.

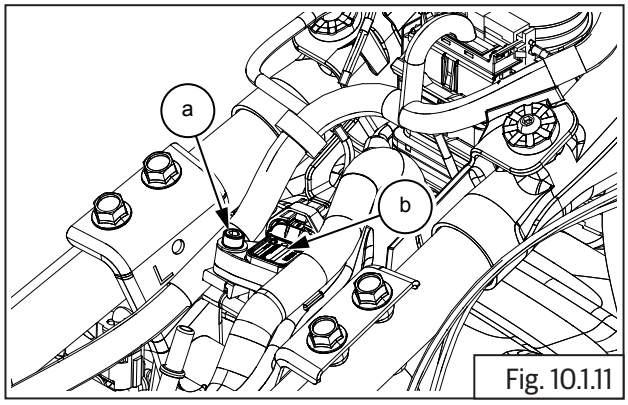

Fig. 10.1.11

	4 mm Allen key with Ratchet

- Gently lift up MAP sensor to access wiring coupler.
- Push lock and release wiring harness connector **(a)** from MAP sensor connector **(b)** and disconnect the same.

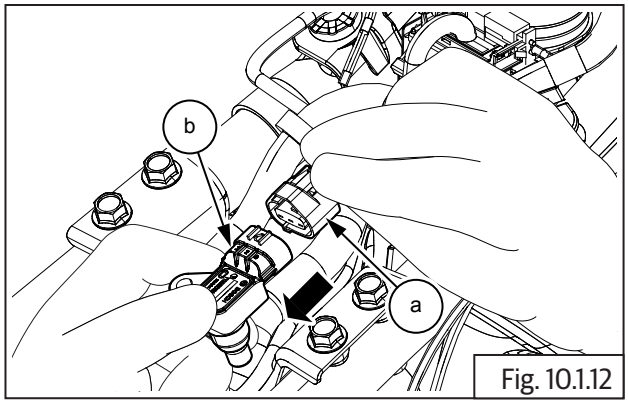

Fig. 10.1.12

⚠ CAUTION

DO NOT lift the MAP sensor too much to avoid damage to the wiring connectors .

10.1.4. Throttle Body Assembly

- Ensure ignition switch and engine stop switch are in OFF position
- Remove the following parts:
  - Side panel RH (section 6.7.8).
  - Rider seat (section 6.7.7).
  - Side panel LH (section 6.7.5).
  - Fuel tank assembly (section 7.1.15).

⚠ CAUTION

Ensure the following:

Fuel is drained completely from fuel tank.

Fuel feed and return hoses are disconnected from the fuel rail.

Wiring couplers to fuel pump and low fuel sensor are disconnected.

EVAP hose pipes are disconnected.

⚠ WARNING

Gasoline is extremely flammable and highly explosive. Improper handling can lead to fatal accident or serious injury.

- Remove the following parts:
  - Throttle body cover LH and RH (section 5.1.7).
  - Throttle cable (section 5.1.8).
  - Remove electrical connectors from TPS, idle speed control stepper motor and fuel injectors LH and RH (section 5.1.9).
  - Rubber hoses connecting to Throttle body from EVAP (section 5.1.11).
- Ensure vacuum hose and MAP sensor are removed from throttle body.
- Loosen wire clips on LH and RH air filter connection tubes (section 5.1.10).
- Loosen worm clip screw on inlet manifold on Cylinder (LH) (section 5.3.19).
- Loosen worm clip screw on inlet manifold on Cylinder (RH) (section 5.3.19).

NOTE
• *Ensure both screws are sufficiently loosened and the worm clips rotates easily in the groove in the manifolds.*

- Gently pull out throttle body from the inlet manifold rubbers along with fuel rail and injectors.

10.1.5. Throttle Position sensor (TPS)

- The TPS is located on left side of throttle body and should **NOT BE REMOVED** from the throttle body under any circumstances.
- In case of any defect in the TPS, complete throttle body assembly should be replaced.

⚠ CAUTION
Do not disturb the TPS sensor (a) fixing screws or the throttle rotor setting screw as it will affect the EMS settings and the engine performance.

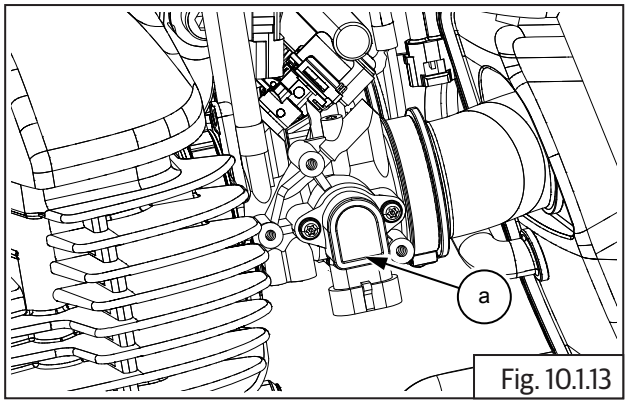

Fig. 10.1.13

10.1.6. Fuel Injectors

- Remove throttle body (section 10.1.4)
- Loosen and remove 2 Nos. button head screws **(a)** holding from fuel injector rail **(b)** to throttle body.

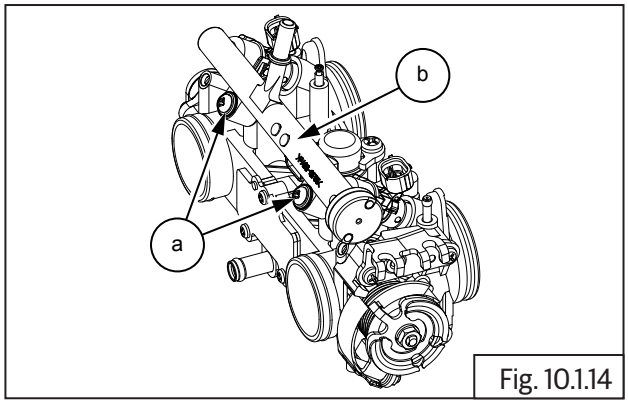

Fig. 10.1.14

	Screw driver (+)

- Gently remove fuel rail **(a)** along with injectors **(b)** from throttle body.

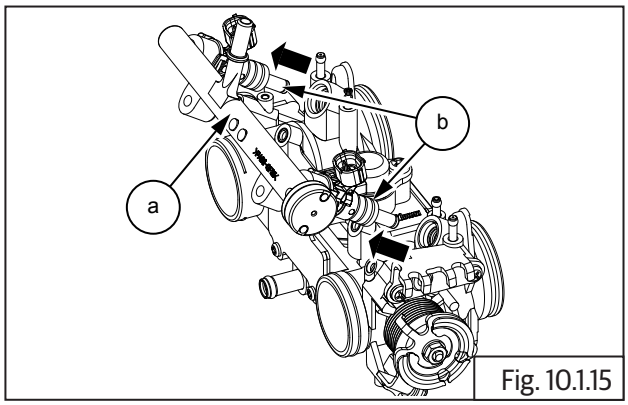

Fig. 10.1.15

- Gently release and remove lock clips **(a)** that secure injectors **(b)** to injector rail **(c)**.

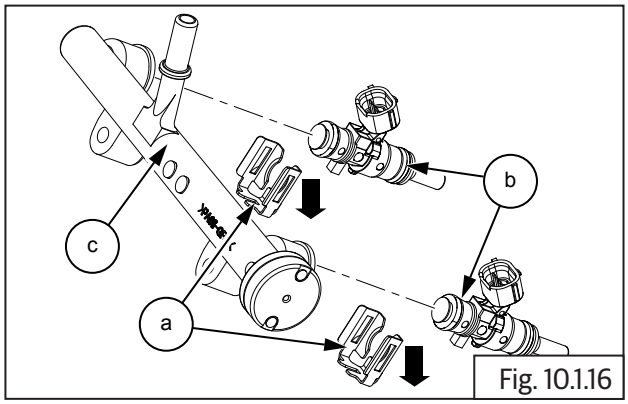

Fig. 10.1.16

- Gently remove injectors from fuel rail along with O-rings upper **(a)** and lower **(b)**.

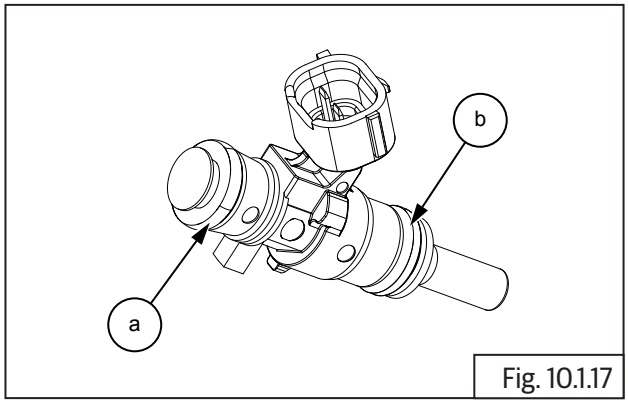

Fig. 10.1.17

10.1.7. Idle Speed Control (ISC)

- Remove throttle body (section 10.1.4).
- The ISC motor is located on top of throttle body.
- Loosen and remove button head screw **(a)** from ISC stepper motor fixing clamp **(b)**.

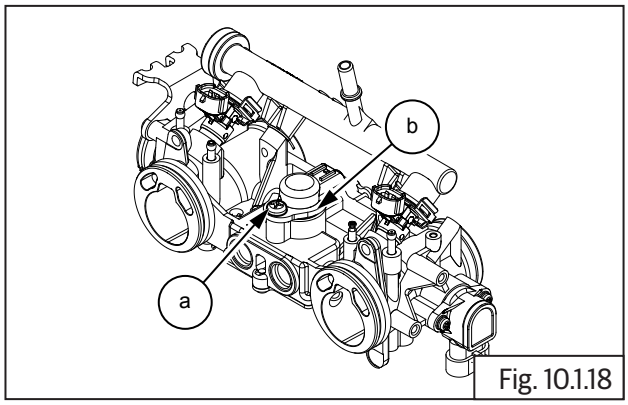

Fig. 10.1.18

	Phillips screw driver (+)

⚠ CAUTION

The spring is loaded hence remove screw with care.

- Gently pull out and remove ISC stepper motor **(a)** along with O-ring **(b)** and spring **(c)** from throttle body **(d)**.

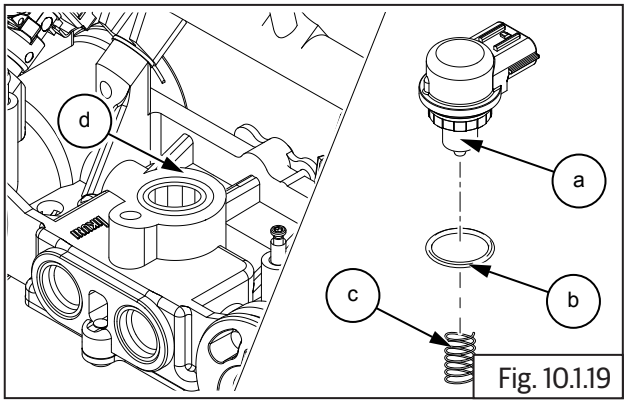

Fig. 10.1.19

10.1.8. Engine Oil Temperature Sensor (EOT)

- Remove throttle body (section 10.1.4).
- The EOT **(a)** is located on the LH side cylinder head below the throttle body.

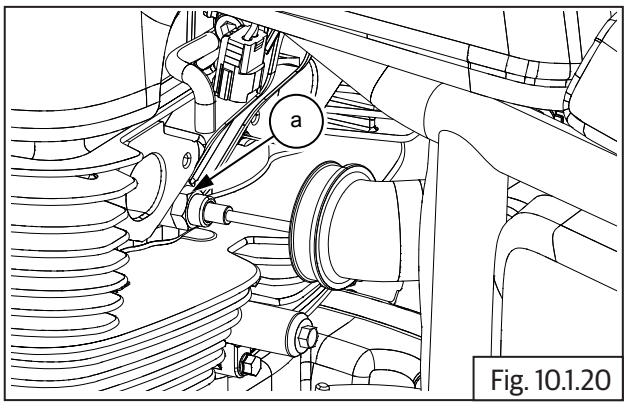

Fig. 10.1.20

NOTE

- *Ensure the engine is cold before dismantling EOT.*
- *Ensure Ignition switch and Engine stop switch are in OFF position.*

⚠ CAUTION

Do not remove EOT from cylinder head when the engine is hot.

- Remove throttle body cover LH (section 5.1.7).
- Disconnect EOT sensor wiring coupler **(a)** from the main harness **(b)** above throttle body.

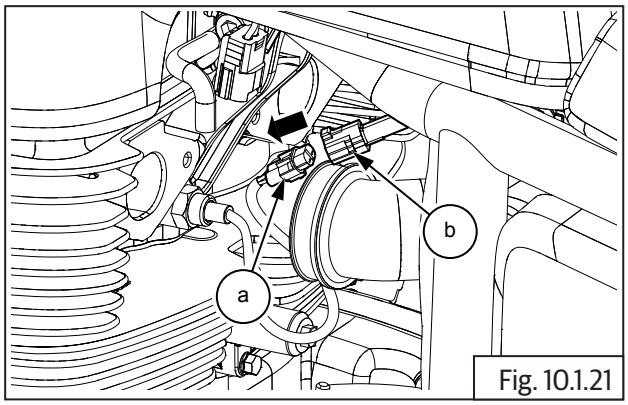

Fig. 10.1.21

- Place a small tray under EOT to collect the oil when it is loosened and removed.
- Insert EOT wiring coupler through a deep grooved ring spanner and locate the spanner on the EOT hex head correctly.
- Gently loosen EOT **(a)** from cylinder head **(b)** and remove along with O-ring **(c)**.

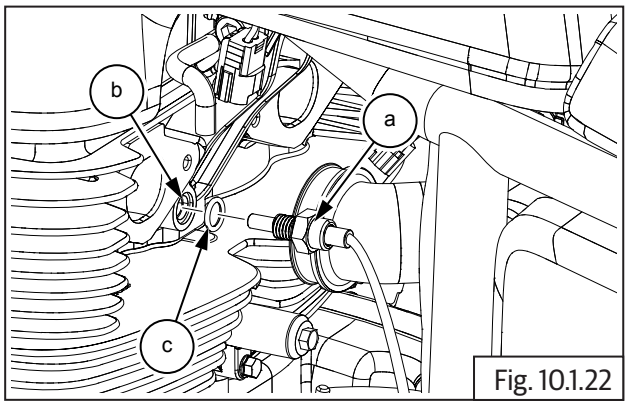

Fig. 10.1.22

	17 mm Deep groove ring spanner

10.1.9. HEGO (O2) Sensor

⚠ CAUTION

Do not loosen/remove HEGO (O2) sensors when the exhaust pipes are hot.

⚠ WARNING

The engine and exhaust systems get extremely hot during normal operation and can result in serious burns if touched. Make sure exhaust pipes are not hot and is at the same levels of ambient/surrounding temperature whenever working on the engine or exhaust systems.

- The HEGO (O2) sensor **(a)** are located on the exhaust pipes **(b)** near the cylinder head RH.

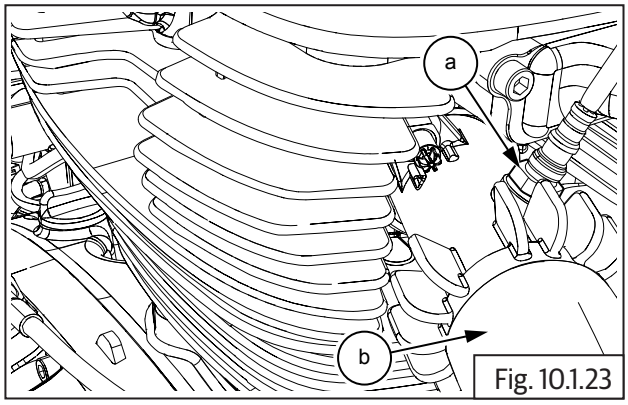

Fig. 10.1.23

- The HEGO (O2) sensor **(a)** are located on the exhaust pipes **(b)** near the cylinder head LH.

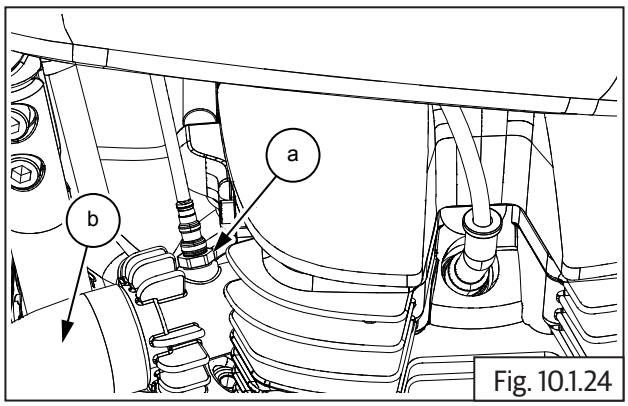

Fig. 10.1.24

- Disconnect horn terminal couplers from the horns LH **(a)** and RH **(b)**.

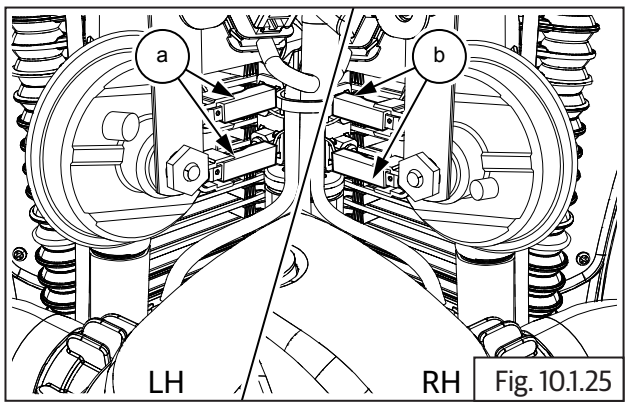

Fig. 10.1.25

- Loosen and remove horn mounting bolts and remove LH and RH horns from frame (section 11.6).
- Disconnect HEGO (O2) sensor LH and RH sensor connectors **(a)** from wiring harness located under fuel tank **(b) .**

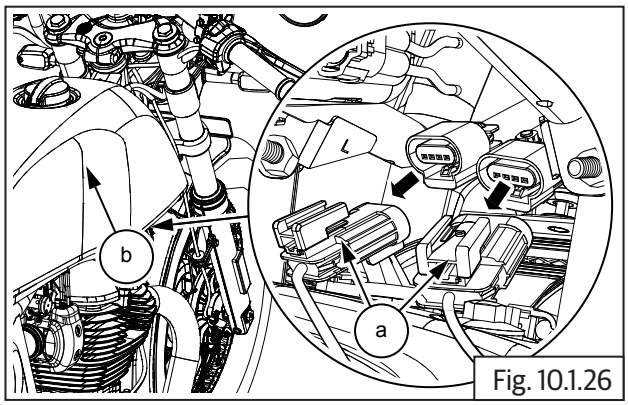

Fig. 10.1.26

- Insert the HEGO (O2) sensor LH wiring coupler through a deep grooved ring spanner and locate the spanner on the sensor hex head correctly.
- Gently loosen LH HEGO (O2) sensor **(a)** from exhaust pipe **(b)** LH and remove along with Copper washer.

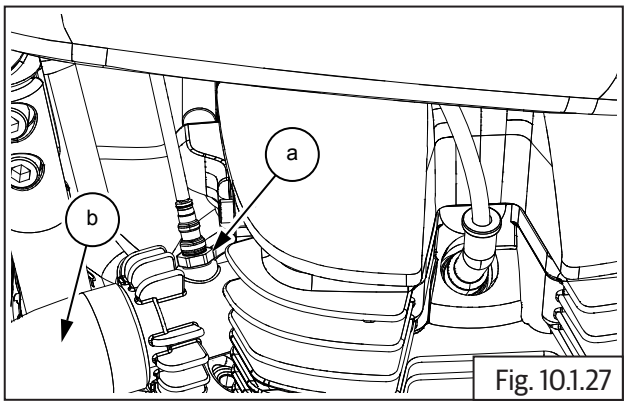

Fig. 10.1.27

	17 mm Deep groove ring spanner

- Repeat process to remove RH HEGO (O2) sensor **(a)** from the RH exhaust pipe **(b)**.

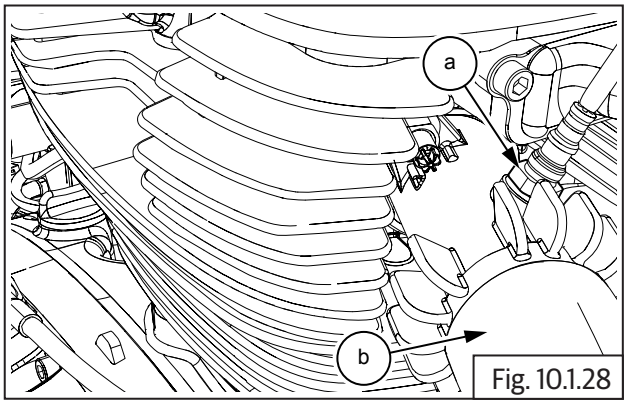

Fig. 10.1.28

	17 mm Deep groove ring spanner

10.1.10. Intake Air Temperature (IAT)

- The IAT **(a)** assembled in the front RH side of the air filter housing.

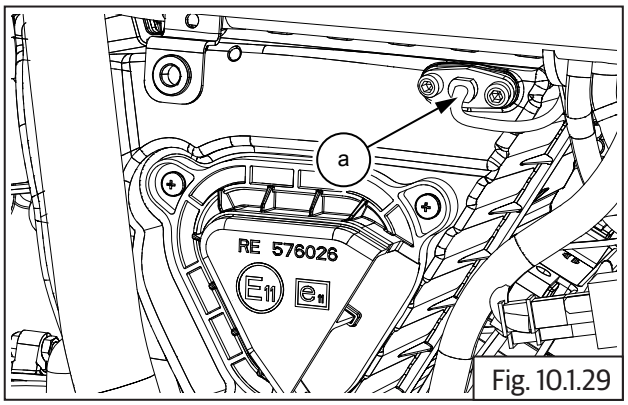

Fig. 10.1.29

- Ensure ignition switch and engine stop switch are in "OFF" position.
- Remove the following parts:
  - Side panel RH (section 6.7.1).
  - Rider seat (section 6.7.2).
  - Side panel LH (section 6.7.4).

⚠ CAUTION

Ensure the following:

Fuel is drained completely from fuel tank.

Fuel feed and return hoses are disconnected from the fuel rail.

Wiring couplers to fuel pump and low fuel sensor are disconnected.

⚠ WARNING

Gasoline is extremely flammable and highly explosive. Improper handling can lead to fatal accident or serious injury.

- Disconnect IAT sensor connector **(a)** from wiring harness located above air filter housing **(b)**.

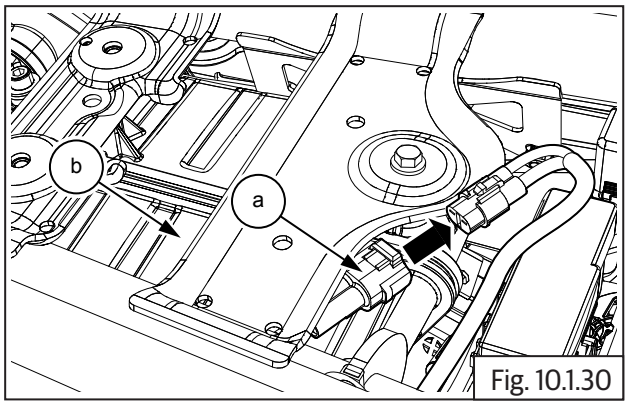

Fig. 10.1.30

- Loosen and remove 2 Nos. Hex socket head cap screws **(M5) (a)** holding IAT sensor to air filter housing.

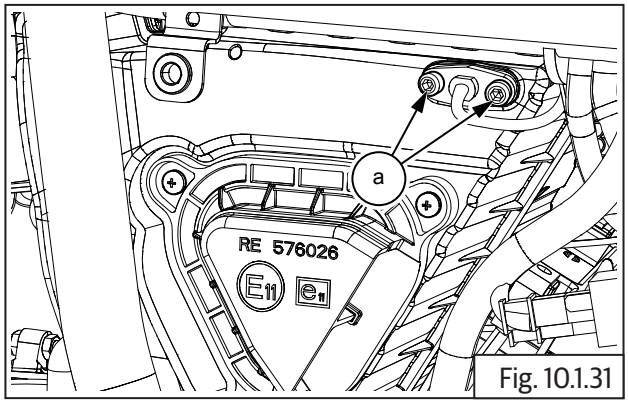

Fig. 10.1.31

	4 mm Allen socket with Ratchet

- Gently pull out IAT sensor **(a)** from air filter housing and remove sensor.

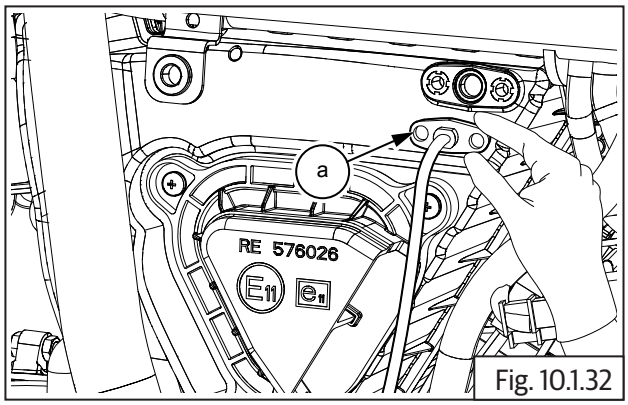

Fig. 10.1.32

10.1.11. Secondary Air Injection Unit (Solenoid) or Air Cut Valve (ACV)

- The ACV **(a)** is assembled on the top RH side of the air filter housing.

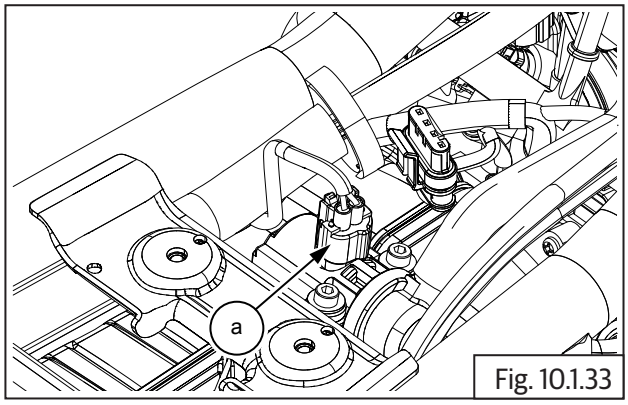

Fig. 10.1.33

- Ensure ignition switch and engine stop switch are in "OFF" position.
- Remove the following parts:
  - Side panel RH (section 6.7.1).
  - Rider seat (section 6.7.2).
  - Side panel LH (section 6.7.4).
  - Fuel tank assembly (section 7.1.1).

⚠ CAUTION

Ensure the following:

Fuel is drained completely from fuel tank.

Fuel feed and return hoses are disconnected from the fuel rail.

Wiring couplers to fuel pump and low fuel sensor are disconnected.

⚠ WARNING

Gasoline is extremely flammable and highly explosive. Improper handling can lead to fatal accident or serious injury.

- Disconnect ACV hose **(a)** from valve **(b)**.

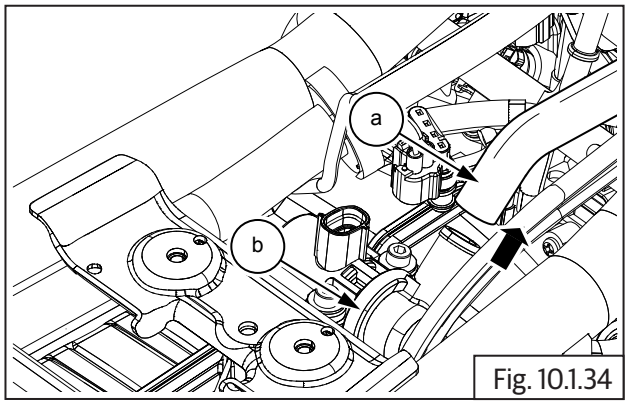

Fig. 10.1.34

- Disconnect ACV connector **(a)** from wiring harness connector **(b)** located above air filter assembly.

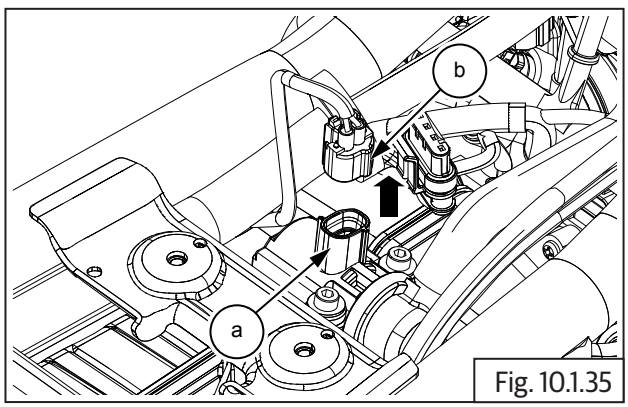

Fig. 10.1.35

- Loosen and remove 2 Nos. Hex socket head cap screws **(M5) (a)** along with washer from ACV **(b)** from air filter.

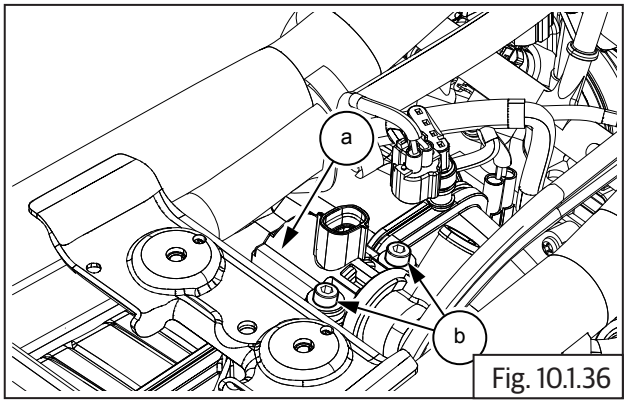

Fig. 10.1.36

	4 mm Allen socket with Ratchet

- Gently pull out ACV **(a)** from air filter housing **(b)**.

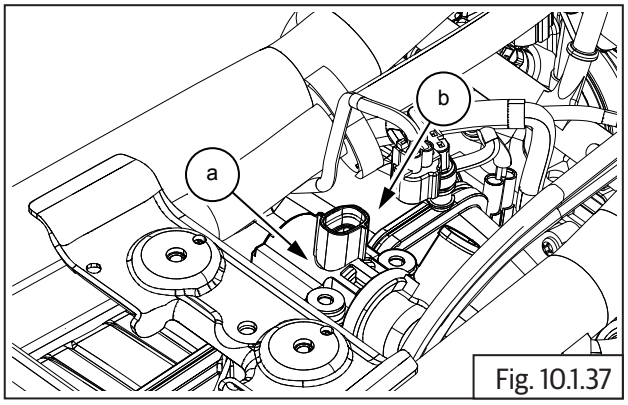

Fig. 10.1.37

- Remove rubber grommet from air filter housing.

10.1.12. Purge Valve

- Remove the following parts:
  - Side panel RH (section 6.7.1).
  - Rider seat (section 6.7.2).
  - Side panel LH (section 6.7.4).
  - Engine control unit (ECU) (section 10.1.1).
  - Rear mudguard (section 6.6.6).
  - Infill mudguard (section 6.6.7).
  - Disconnect the roll over sensor connector (section 10.1.13).

- The purge valve **(a)** is part of the EVAP system and is located near battery tray bracket and connected to the throttle body bottom/side.

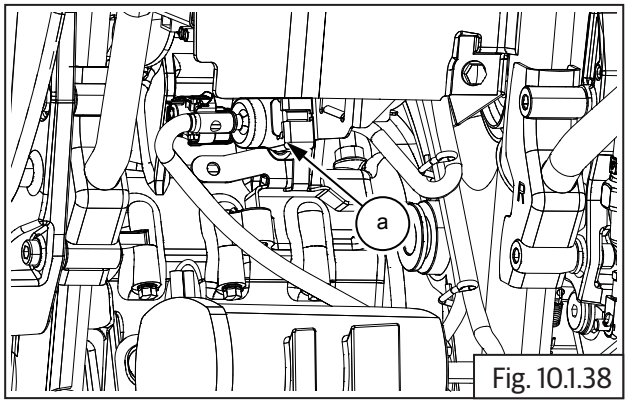

Fig. 10.1.38

- Disconnect hose **(a)** connecting purge valve to throttle body.
- Disconnect hose **(b)** connecting purge valve to canister.

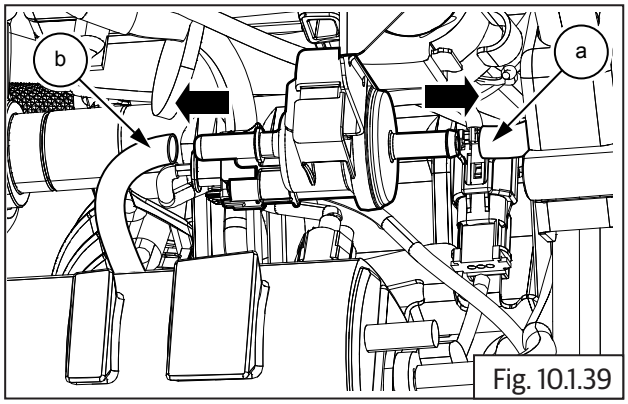

Fig. 10.1.39

- Disconnect wiring coupler **(a)** from purge valve **(b)**.

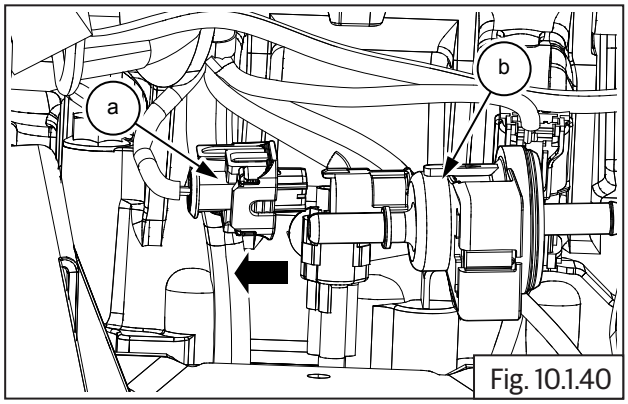

Fig. 10.1.40

- Gently pull out purge valve from bracket.

10.1.13. Roll Over Sensor

- The Roll over sensor **(a)** is located on the rear mudguard infill.

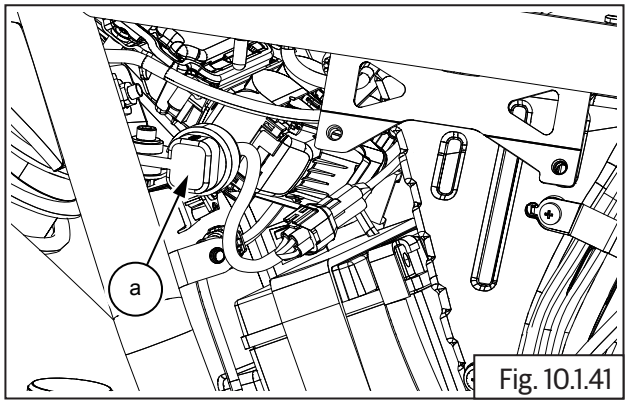

Fig. 10.1.41

- Ensure ignition switch and engine stop switch are in "OFF" position.
- Remove the following parts:
  - Side panel RH (section 6.7.1).
  - Rider seat (section 6.7.2).
- Disconnect roll over sensor wiring coupler **(a)** from main harness **(b)**.

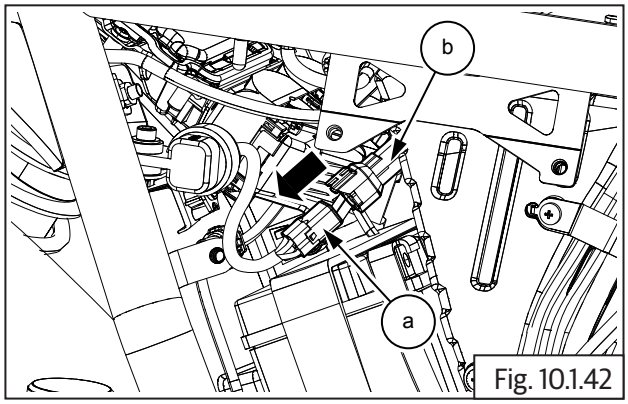

Fig. 10.1.42

- Loosen and remove cap screw **(M5) (a)** holding roll over sensor **(b)** to frame **(c)** and remove roll over sensor.

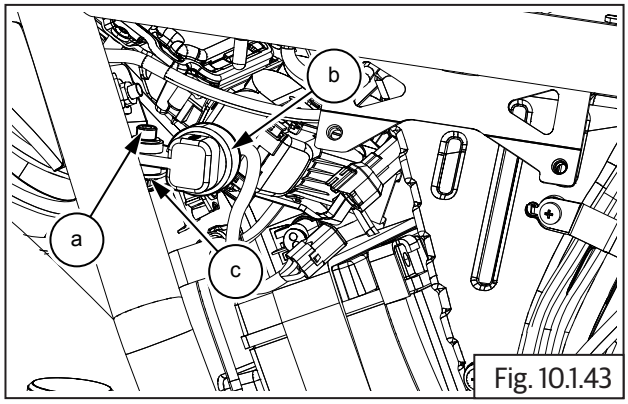

Fig. 10.1.43

	4 mm Socket with Ratchet

10.1.14. Ignition Coil

- The Ignition coil **(a)** is located on the frame under fuel tank.

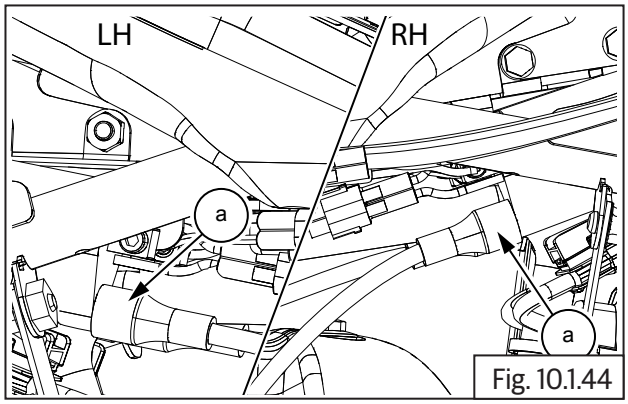

Fig. 10.1.44

- Ensure Ignition switch and Engine stop switch are in "OFF" position.
- Remove the following parts:
  - Side panel RH (section 6.7.1).
  - Rider seat (section 6.7.2).
  - Side panel LH (section 6.7.4).

⚠ CAUTION

Ensure the following:

Fuel is drained completely from fuel tank.

Fuel feed and return hoses are disconnected from the fuel rail.

Wiring couplers to fuel pump and low fuel sensor are disconnected.

⚠ WARNING

Gasoline is extremely flammable and highly explosive. Improper handling can lead to fatal accident or serious injury.

- Disconnect spark plug caps from the LH spark plug **(a)**.

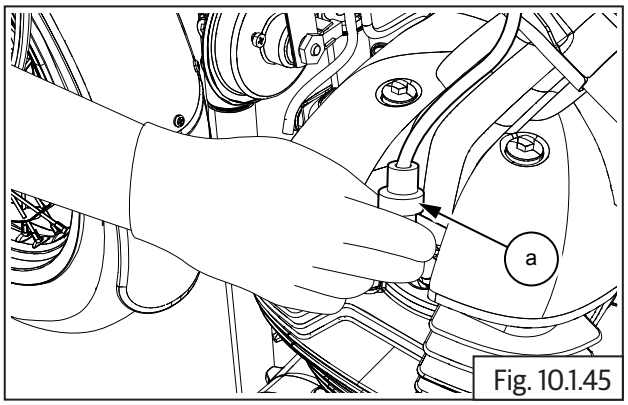

Fig. 10.1.45

- Disconnect spark plug cap **(a)** from the RH spark plug.

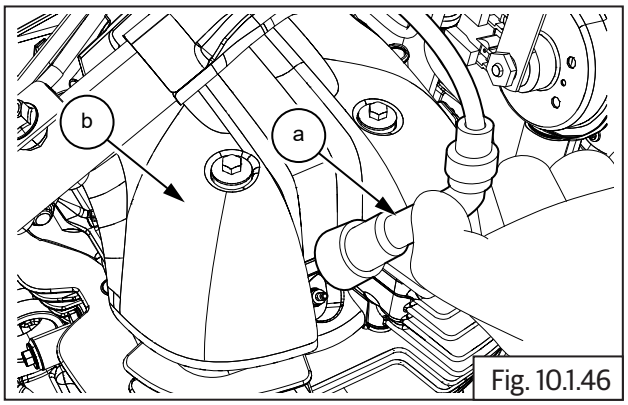

Fig. 10.1.46

- Disconnect wiring couplers **(a)** and **(b)** from the ignition coil on both LH and RH sides.

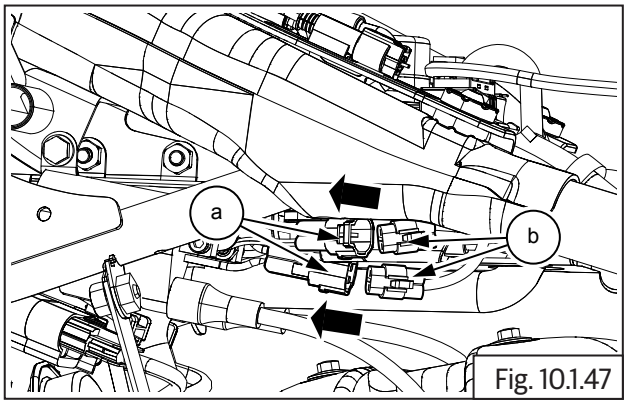

Fig. 10.1.47

- Loosen and remove. Hex head collar bolts **(M6) (a)** from main frame LH **(b)**.

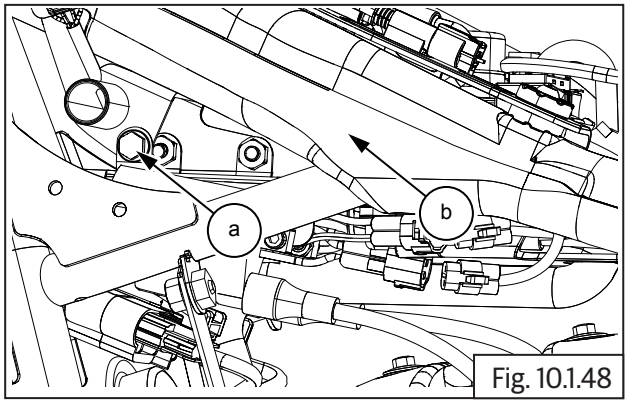

Fig. 10.1.48

	10 mm Socket with Ratchet

- Support Ignition coil, loosen and remove 2 Nos. Hex head collar bolts **(M6) (a)** from main frame RH **(b).**

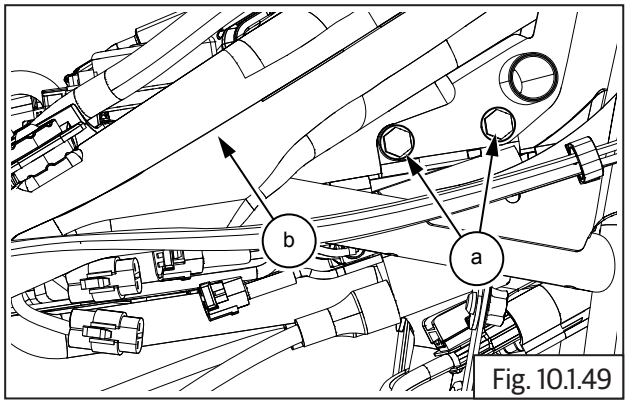

Fig. 10.1.49

	10 mm Socket with Ratchet

- Gently slide out Ignition coil **(a)** from frame and remove along HT cables **(b)**.

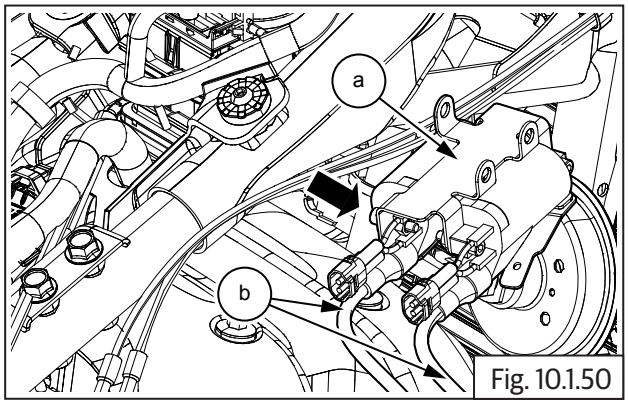

Fig. 10.1.50

10.1.15. Ignition Coil LH and RH from bracket

- Loosen and remove 2 Nos. slot head screws **(M5) (a)** holding ignition coil LH **(b)** to bracket.

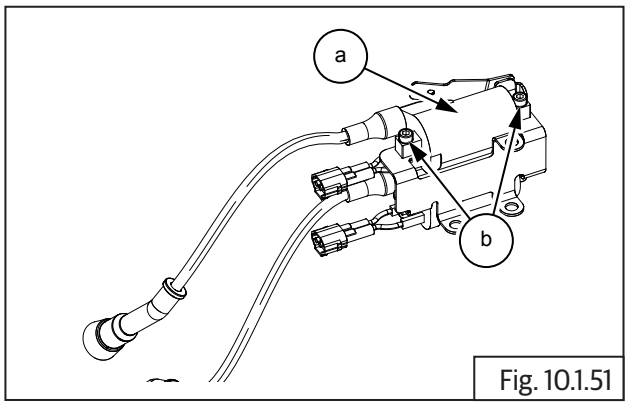

Fig. 10.1.51

	Screw driver (+)

- Separate ignition coil LH **(a)** from bracket **(b)**.

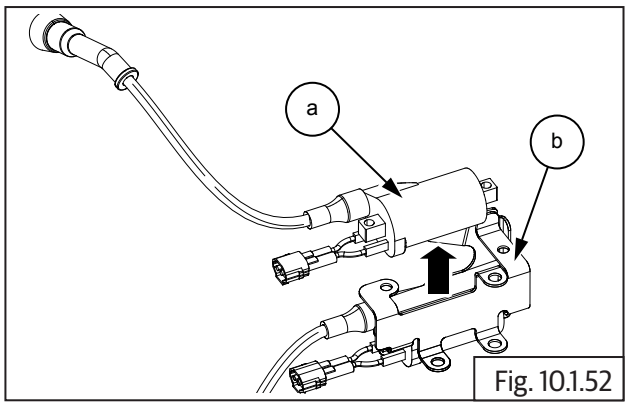

Fig. 10.1.52

- Loosen and remove 2 Nos. slot head screws **(M5) (a)** holding ignition coil RH **(b)** to bracket.

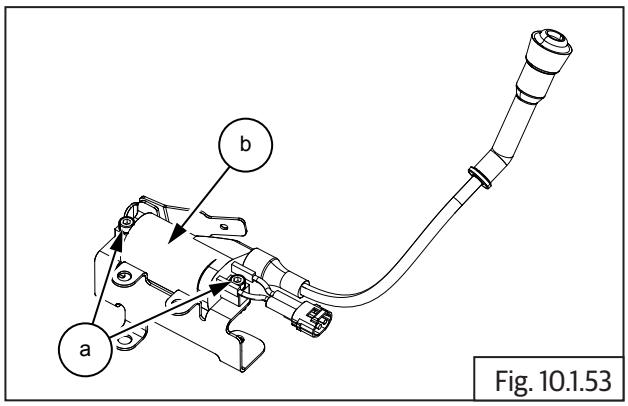

Fig. 10.1.53

	Screw driver (+)

- Separate ignition coil RH **(a)** from bracket **(b)**.

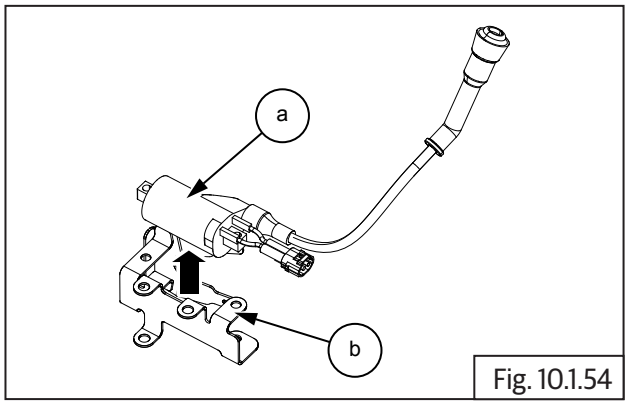

Fig. 10.1.54

10.1.1.6 Crank Position Sensor

- The crank position sensor **(a)** is located inside the engine cover LH and attached to the stator coil.

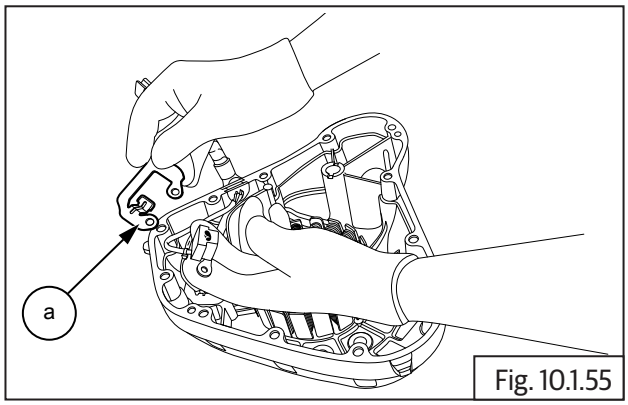

Fig. 10.1.55

- Ensure Ignition switch and Engine stop switch are in "OFF" position.
- Drain engine oil (section 5.1.1).
- Disconnect wiring coupler **(a)** of stator from main wiring harness **(b)**.

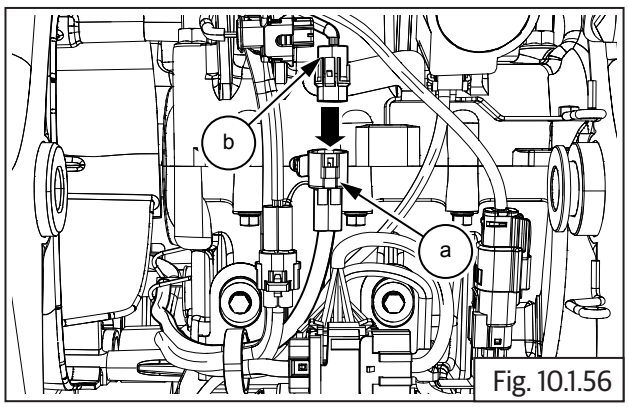

Fig. 10.1.56

- Remove FD sprocket cover (section 5.1.24).
- Remove cover LH from Engine (section 5.1.34).
- Loosen and remove 3 Nos. Hex socket head screws **(M6) (a)** holding stator coil.

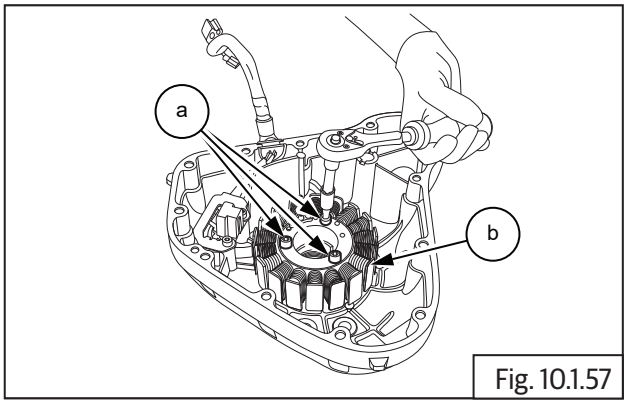

Fig. 10.1.57

	5 mm Socket with Ratchet

- Loosen and remove 2 Nos. Hex socket head bolts **(M5) (a)** holding crankshaft position sensor guide plate **(b)** to cover LH.

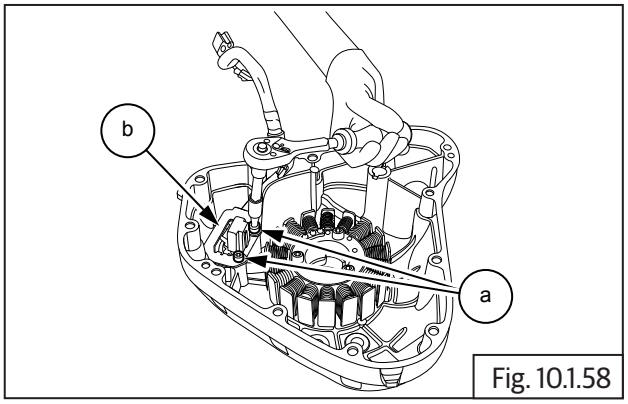

Fig. 10.1.58

	4 mm Socket with Ratchet

- Remove guide plate **(a)** from LH cover.

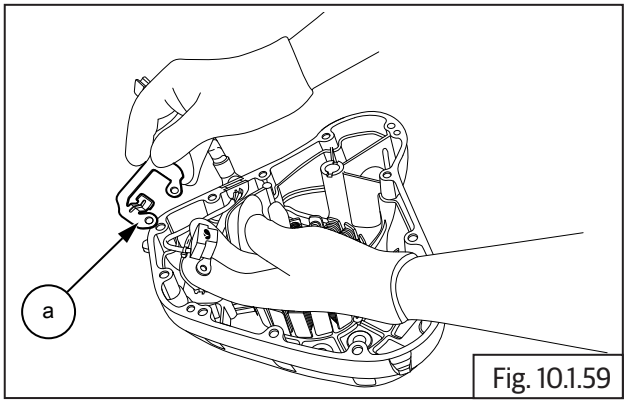

Fig. 10.1.59

- Gently slide out wiring harness, rubber grommet **(a)** from the slot in cover LH and remove stator coil along with crank shaft position sensor **(b)**.

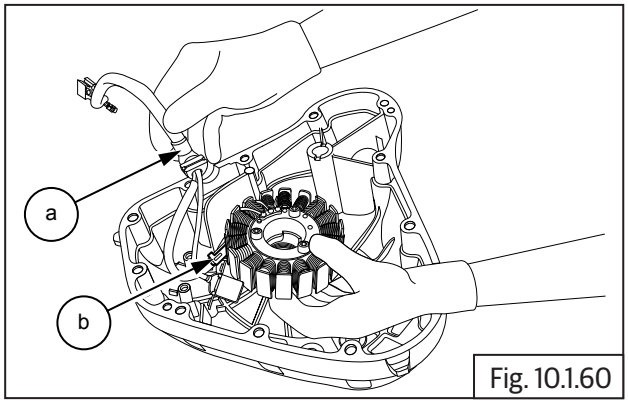

Fig. 10.1.60

10.1.17. Gear Position Sensor

- The gear position sensor **(a)** is located on the crankcase LH before FD sprocket.

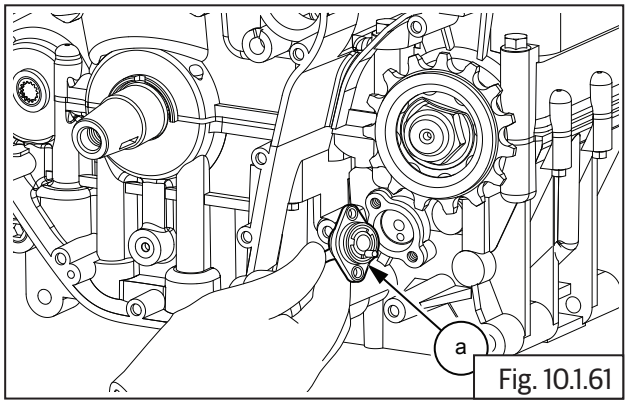

Fig. 10.1.61

- Ensure Ignition switch and engine stop switch are in OFF position.
- Disconnect wiring coupler **(a)** of gear position sensor from main wiring harness **(b)**.

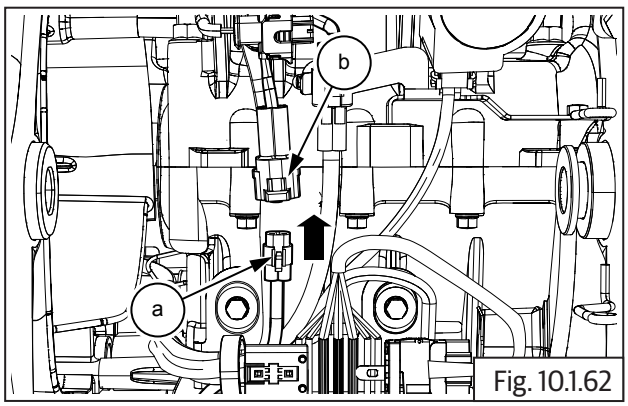

Fig. 10.1.62

- Remove FD sprocket cover (section 5.1.24).
- Loosen and remove 2 Nos. Hex head bolts **(M6) (a)** holding the gear position sensor to crankcase LH **(b)**.

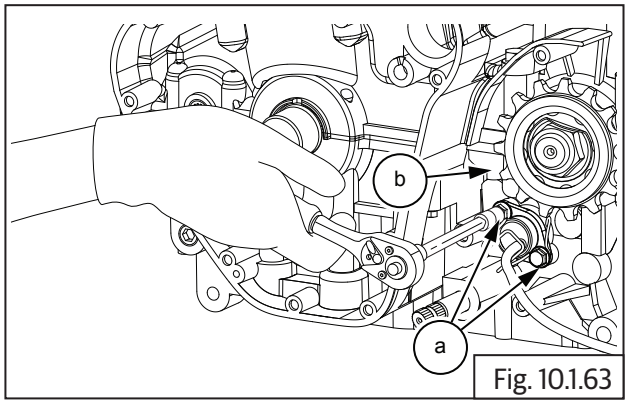

Fig. 10.1.63

	10 mm Socket with Ratchet

- Remove cable bracket **(a)** and gently pull out gear position sensor from crankcase LH.

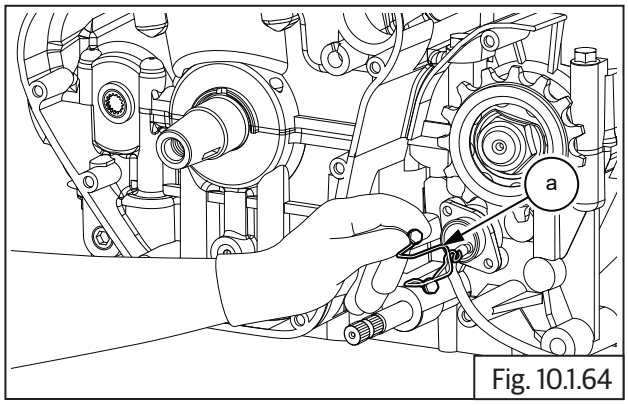

Fig. 10.1.64

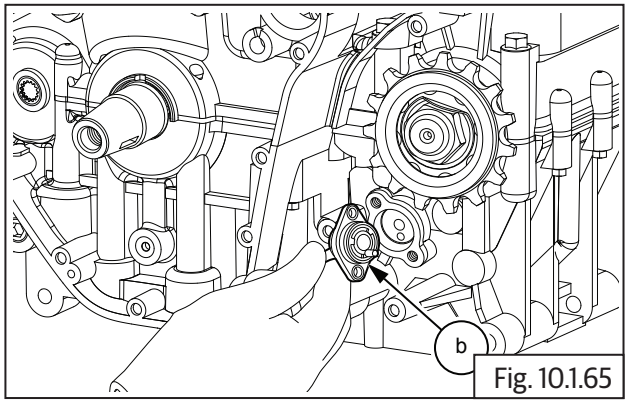

Fig. 10.1.65

10.1.18. Clutch Switch

- Remove headlamp assembly (section 11.1.1).
- Disconnect clutch switch connector **(a)**.

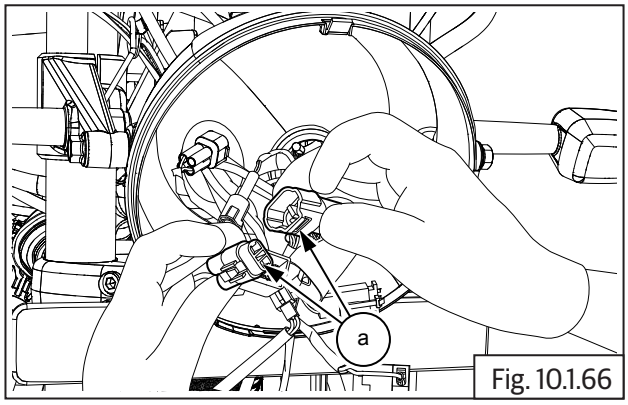

Fig. 10.1.66

- Loosen and remove 2 Nos of screws **(a)** from clutch lever **(b)**.

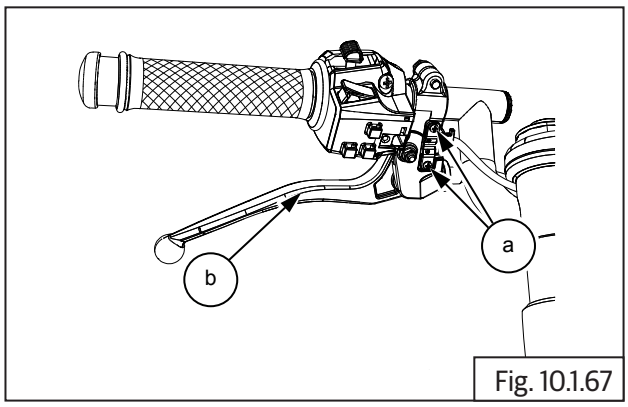

Fig. 10.1.67

	Screw Driver (+)

10.1.19. Side Stand Switch

⚠ CAUTION

Ensure the motorcycle is upright on a firm and flat surface.

- Locate a scissor jack **(a)** under cradle frame **(b)** and lift motorcycle such that the front wheel is off the ground by minimum 6 inches (or 15 cm).

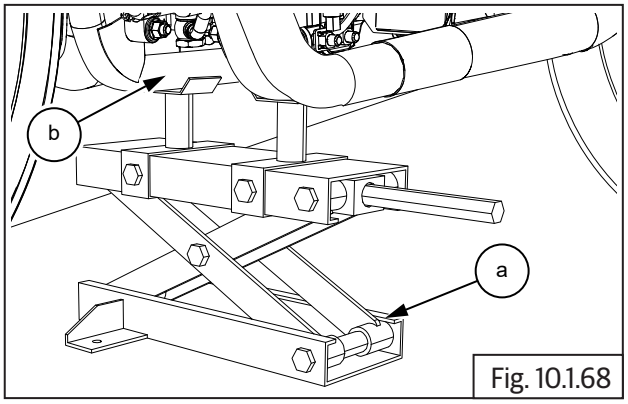

Fig. 10.1.68

- Disconnect side stand connector **(a)** from wiring harness located behind engine **(b)**.

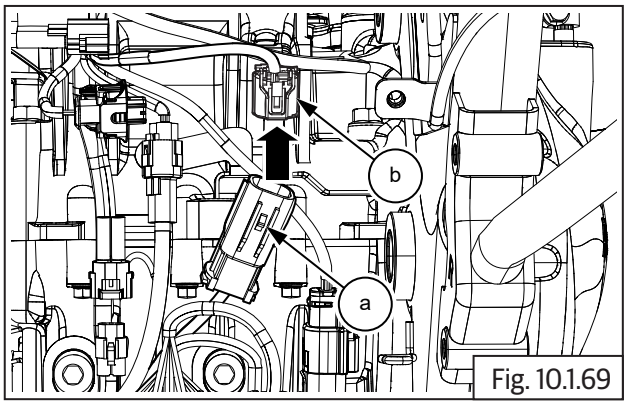

Fig. 10.1.69

- Release the side stand.
- Loosen and remove Hex socket head cap screw **(M5) (a)** from side stand switch located on engine frame LH **(b)**.

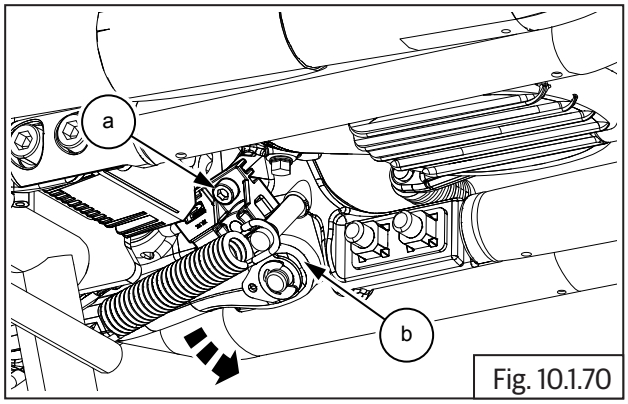

Fig. 10.1.70

	4 mm Allen socket With Ratchet

10.1.20. Starter Motor Solenoid

- Remove the following parts:
  - Rear wheel (section 6.8.3).
  - Rear mudguard in fill cover (section 6.6.7).
- Locate solenoid connectors below battery tray, ensure ignition off.
- Disconnect starter solenoid connectors **(a)** from wiring harness located below battery tray.

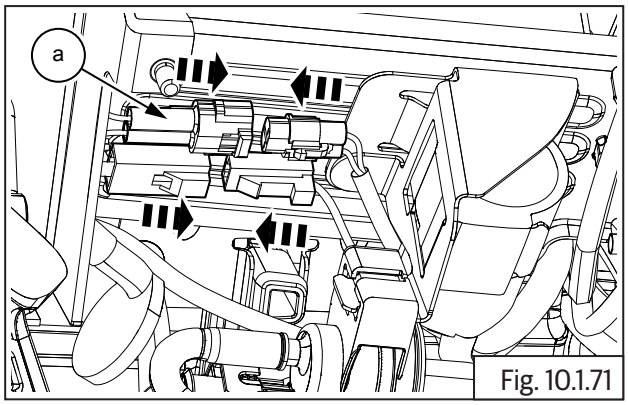

Fig. 10.1.71

- Gently slide and remove solenoid coil **(a)** from battery tray bracket **(b)**.

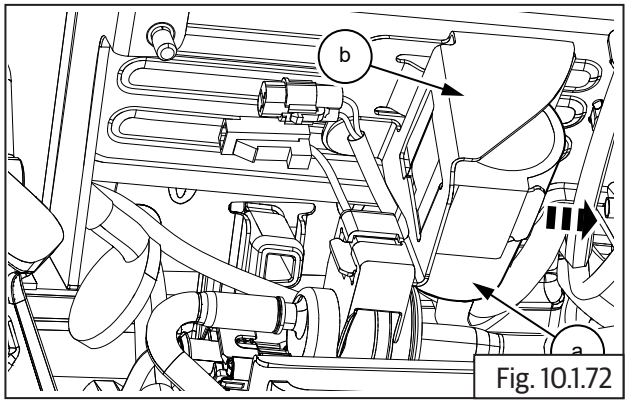

Fig. 10.1.72

Assembly

10.1.21. Engine Control Unit (ECU)

⚠ CAUTION

Before assembling any part of the EMS, the Ignition switch and Engine stop switch MUST be in OFF position

Before connecting ECU into wiring harness, the battery terminals must be disconnected from the battery.

- Insert the wiring harness connector (Green point tape) into ECU connector (2) and lock fully closed.

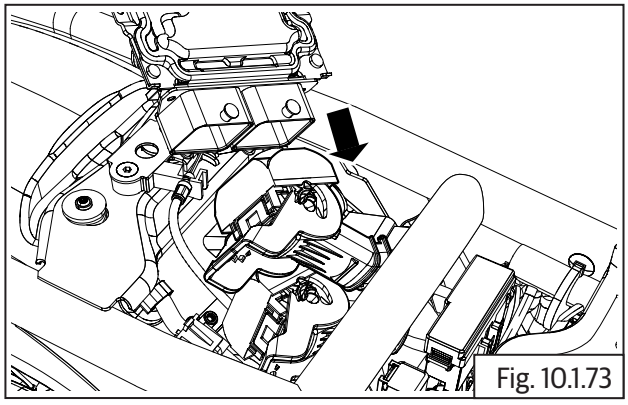
Fig. 10.1.73

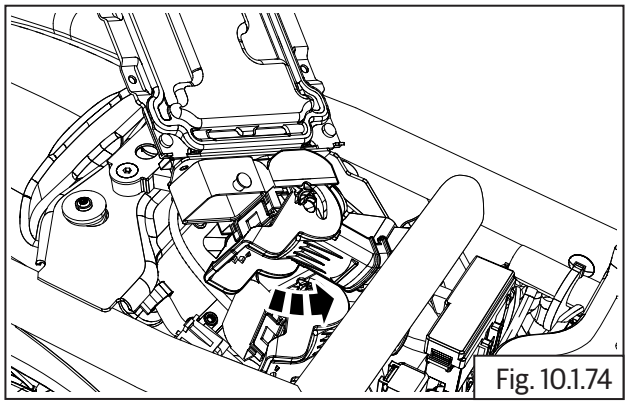
Fig. 10.1.74

- Ensure the lock **(a)** is properly seated.

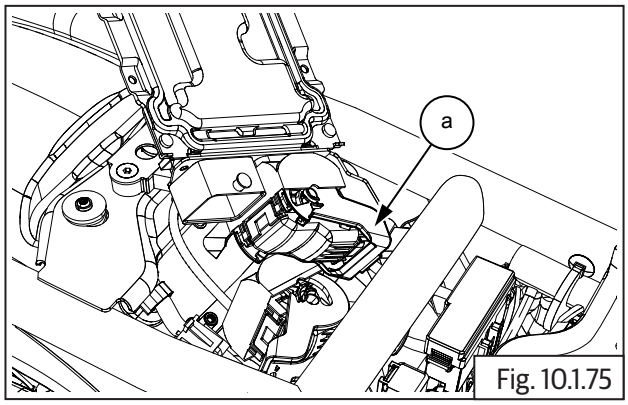

Fig. 10.1.75

- Insert the wiring harness connector (Yellow point tape) into ECU connector (1) and lock fully closed.

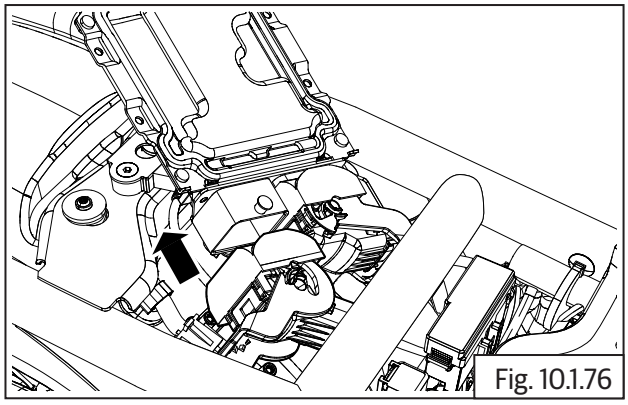
Fig. 10.1.76

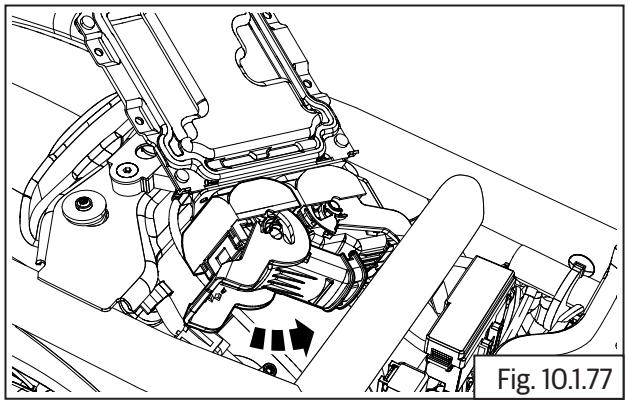
Fig. 10.1.77

- Ensure the lock **(a)** properly seated.

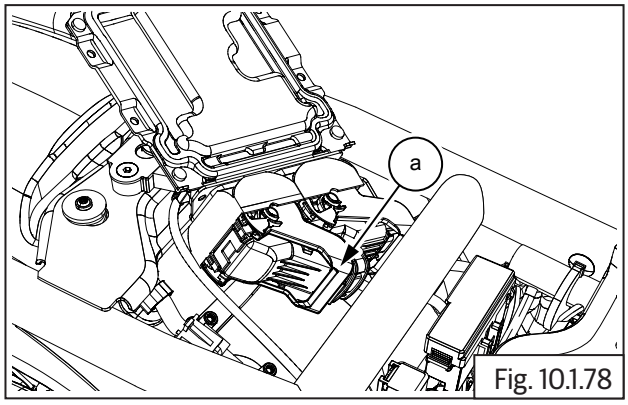

Fig. 10.1.78

⚠ CAUTION

Ensure the locks are fully lifted up and released, before connecting wiring connectors into ECU.

Insert the wiring harness connector (Green point tape) into ECU connector (2) and lock fully closed.

Insert the wiring harness connector (Yellow point tape) into ECU connector (1) and lock fully closed.

Ensure the locks are handled with care and do not get damaged or broken

Damaged or broken locks will result in loose connections and cause the ECU to fail.

- Locate and tighten 4 Nos. flange Torx head screws **(T20) (a)** holding ECU **(b)** to frame.

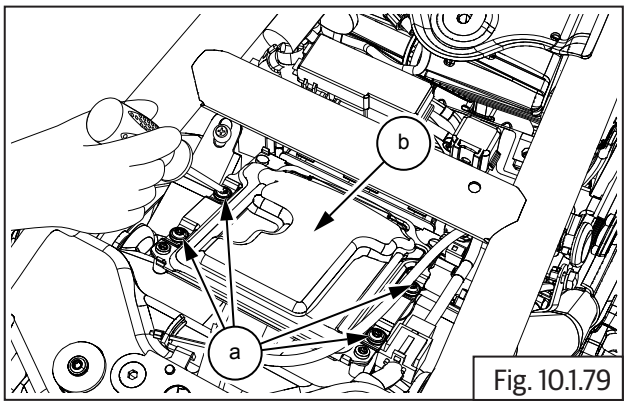

Fig. 10.1.79

	T20 Torx screw driver
Torque	1.5 N-m/0.15 kgf-m

- Locate fuse box **(a)** and Diagnosis On Line (DOL) connector **(b)** into frame along with wiring harness.

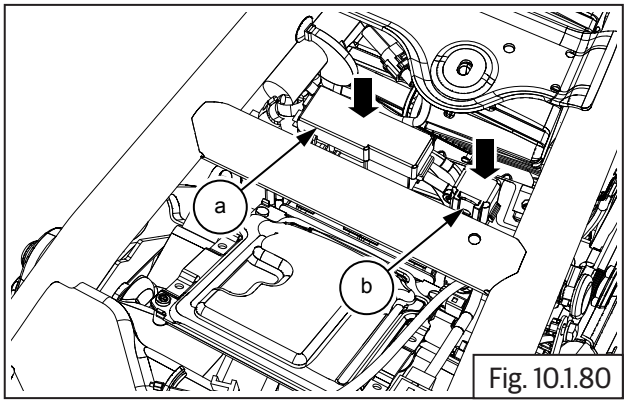

Fig. 10.1.80

- Connect battery terminals.
- Assemble rider seat (section 6.7.7).
- Assemble side panel RH (section 6.7.8).

10.1.22. Fuel Pump

- Ensure Ignition switch and engine stop switch are in "OFF" position.
- Gently insert fuel pump **(a)** from fuel tank **(b)** along with O-ring.

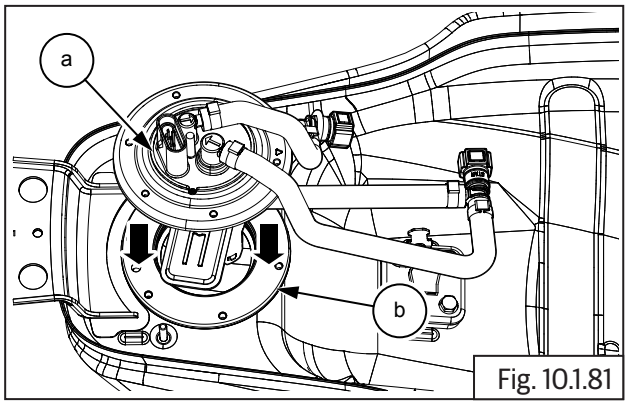

Fig. 10.1.81

- Locate and tighten 6 Nos. Hex socket head bolts **(M5) (a)** holding fuel pump **(b)** to fuel tank **(c)**.

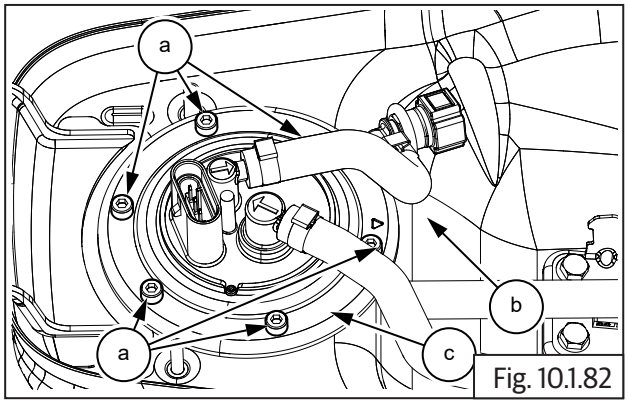

Fig. 10.1.82

	4 mm Allen socket with Ratchet
Torque	5 N-m/0.5 kgf-m

- Assemble fuel tank assembly (section 7.1.15).

⚠ CAUTION

Ensure the following:

Fuel is refilled into fuel tank.

Fuel feed and return hoses are connected into fuel rail.

Wiring couplers to fuel pump and low fuel sensor are connected.

EVAP hose pipes are connected.

Water drain hose are connected.

⚠ WARNING

Gasoline is extremely flammable.

- Assemble rider seat (section 6.7.7).
- Assemble side panel RH (section 6.7.8).

10.1.23. Fuel injectors

- Fuel injectors are located on throttle body along with rail.
- Ensure the O-rings **(a)** and **(b)**.

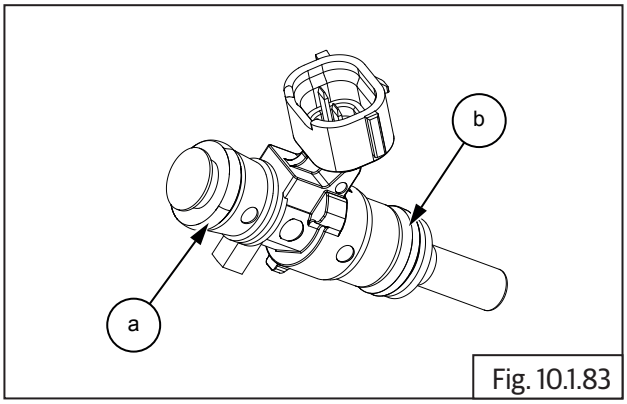

Fig. 10.1.83

- Gently assemble injectors **(a)** into fuel rail **(b)** along with upper and lower O-rings .

- Gently assemble injector lock **(c)** into fuel rail and injector.

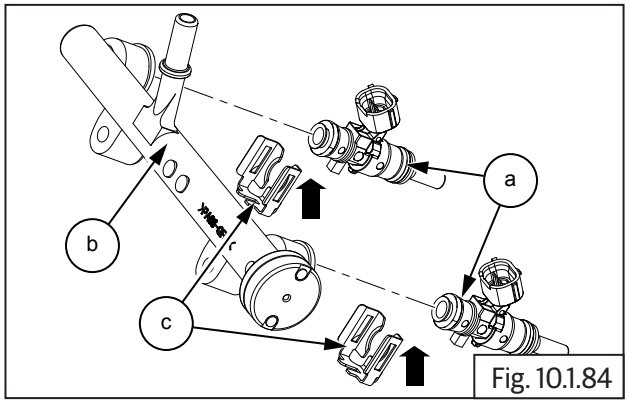

Fig. 10.1.84

- Gently locate fuel rail **(a)** along with injectors **(b)** into throttle body.

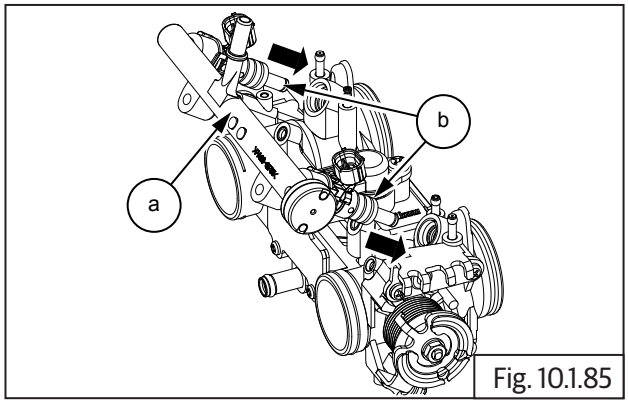

Fig. 10.1.85

- Insert and tighten 2 Nos. button head screws **(a)** into fuel injector rail **(b)** located on throttle body.

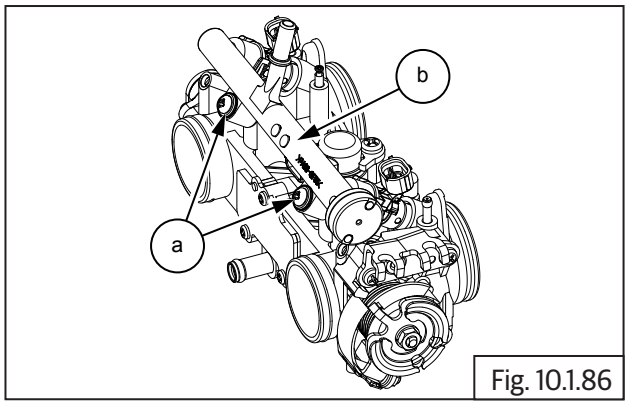

Fig. 10.1.86

	Screw driver (+)

- Assemble throttle body (section 5.2.31).

⚠ CAUTION

Ensure the following:

Fuel is refilled into fuel tank.

Fuel feed and return hoses are connected into fuel rail.

Wiring couplers to fuel pump and low fuel sensor are connected.

EVAP hose pipes are connected.

Water drain hose are connected.

- Assemble the following parts:
  - Fuel tank (section 7.1.15).
  - Rider seat (section 6.7.7).
  - RH side cover (section 6.7.8).

10.1.24. Manifold Absolute Pressure Sensor (MAP)

- Ensure Ignition switch and Engine stop switch are in "OFF" position.
- Lock wiring harness connector **(a)** into MAP sensor connector **(b)** .

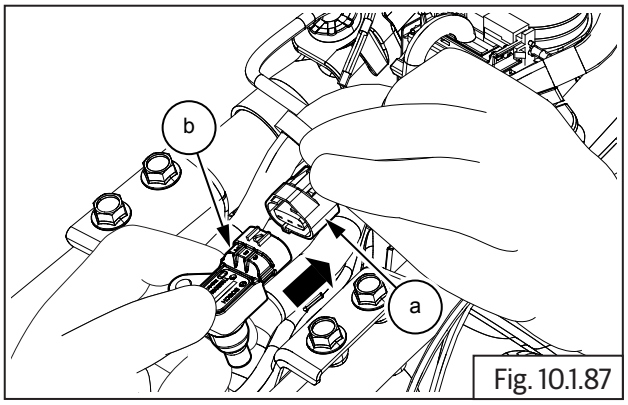

Fig. 10.1.87

- Insert and tighten Hex socket head bolts along with washer **(M5) (a)** to fix MAP sensor **(b)** into frame nearest engine steady bracket **LH (c)**.

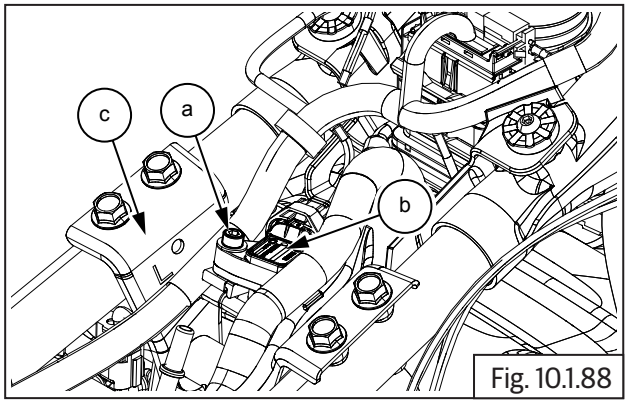

Fig. 10.1.88

	4 mm Allen socket with Ratchet
Torque	5 N-m/0.5 kgf-m

- Connect MAP Vacuum hose **(a)** into throttle body **(b)**.

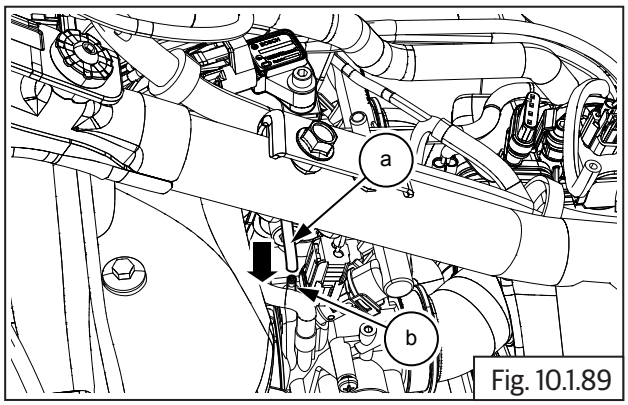

Fig. 10.1.89

- Assemble fuel tank assembly (section 7.1.15).

⚠ WARNING

Gasoline is extremely flammable.

⚠ CAUTION

Ensure the following:

Fuel is refilled into fuel tank.

Fuel feed and return hoses are connected into fuel rail.

Wiring couplers to fuel pump and low fuel sensor are connected.

EVAP hose pipes are connected.

Water drain hose are connected

- Assemble rider seat (section 6.7.7).
- Assemble side panel RH (section 6.7.8).

10.1.25. Idle Speed Controller (ISC - Stepper Motor)

- Locate stepper motor **(a)** into throttle body **(b)** along with new O-ring and spring **(c)**.

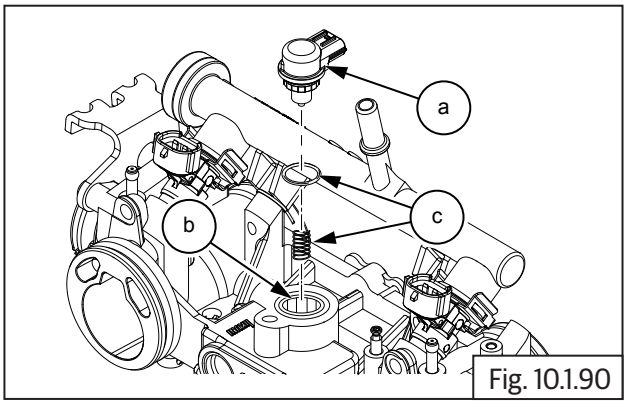

Fig. 10.1.90

- Insert and tighten button head screw **(a)** into ISC stepper motor clamp **(b)**.

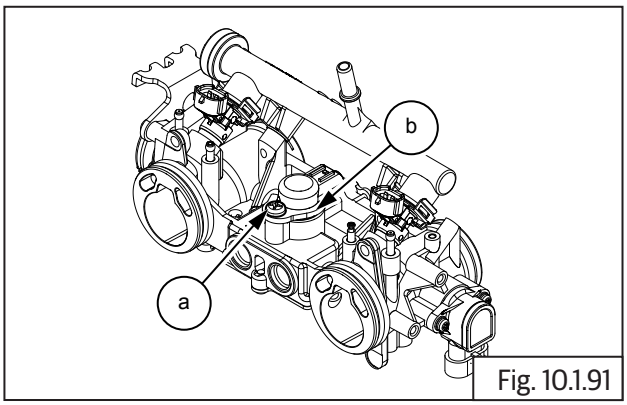

Fig. 10.1.91

	Screw driver (+)

10.1.26. Throttle Body

- Ensure Ignition switch and Engine stop switch are in "OFF" position.

NOTE
• *Ensure both screws are sufficiently loosened and the worm clips rotates easily in the groove in the manifolds.* • *Ensure both screws are sufficiently loosened, and the worm clips rotates easily in the groove in the air filter bellows worm clips.*

- Gently locate throttle body into inlet manifold rubbers with fuel rail and injectors and ISC/TPS.
- Tighten worm clip screw on inlet manifold on Cylinder (RH) (section 5.4.23).
- Tighten worm clip screw on inlet manifold on Cylinder (LH) (section 5.4.23).
- Tighten wire clips on the LH and RH air filter connection tubes (section 5.4.24).
- Tighten the 2 Nos. air filter box assembly mounting bolts (section 6.1.3).
- Insert MAP sensor vacuum hose into throttle body.
- Insert EVAP hoses into throttle body.
- Connect electrical couplers into TPS, idle speed control stepper motor and Fuel injectors LH and RH.
- Assemble the following:
  - Throttle cable (section 6.2.3).
  - Throttle body covers LH and RH (section 5.2.35).
  - Fuel tank assembly (section 7.1.15).

⚠ CAUTION
Ensure the following: **Fuel is refilled into fuel tank.** **Fuel feed and return hoses are connected into fuel rail.** **Wiring couplers to fuel pump and low fuel sensor are connected.** **EVAP hose pipes are connected.** **Water drain hose are connected.**

⚠ WARNING
Gasoline is extremely flammable.

10.1.27. Throttle Position sensor (TPS)

- The TPS **(a)** is located on the left side of the throttle body and should NOT BE REMOVED from the throttle body under any circumstances.

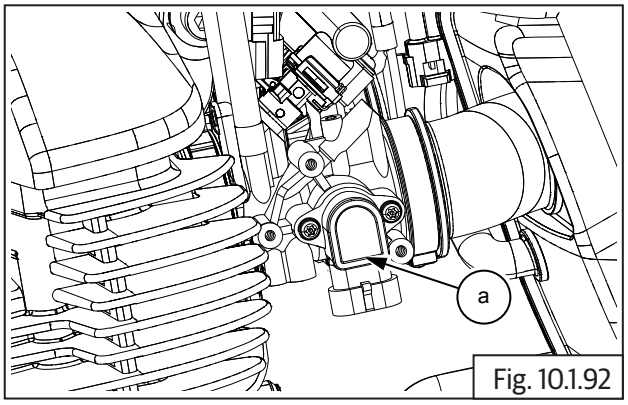

Fig. 10.1.92

10.1.28. Engine Oil Temperature Sensor (EOT)

- The EOT **(a)** is located on the LH side cylinder head below the throttle body.

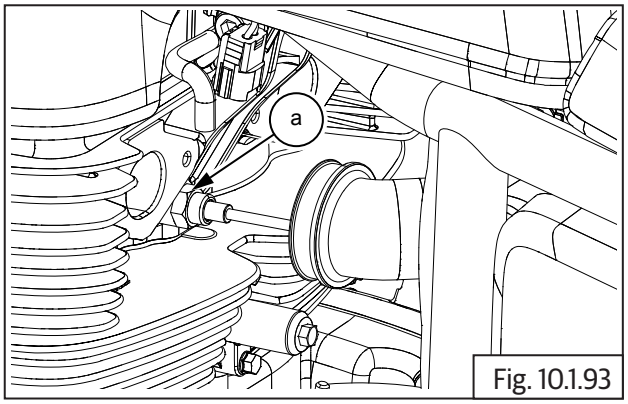

Fig. 10.1.93

- Locate EOT sensor **(a)** along with O-ring **(b)** into engine head assembly **(c)**.

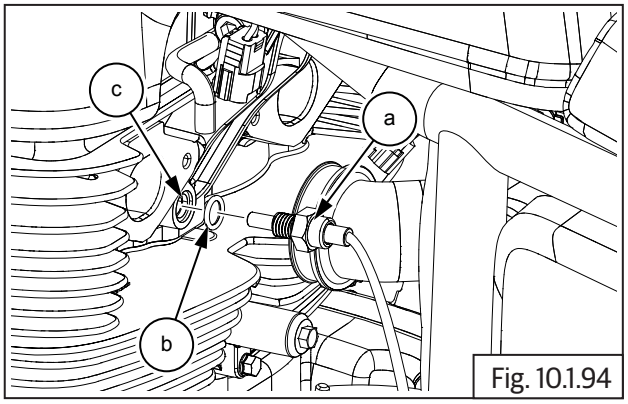

Fig. 10.1.94

- Tighten EOT sensor Hex head **(M17) (a)** into engine head assembly **(b)**.

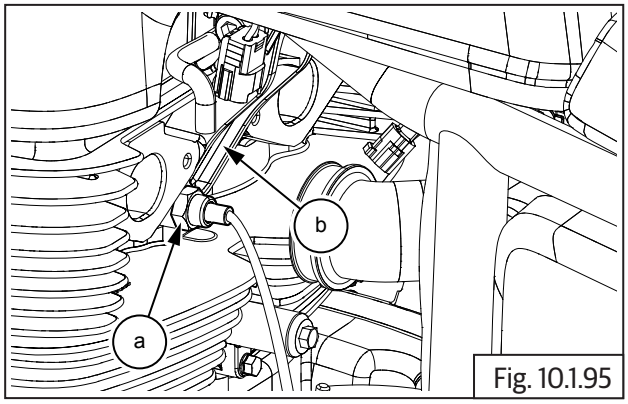

Fig. 10.1.95

	17 mm Deep groove spanner
Torque	9 N-m/0.9 kgf-m

- Connect EOT sensor connector **(a)** into wiring harness **(b)** above throttle body.
- Ensure connector is locked and wire is routed correctly.

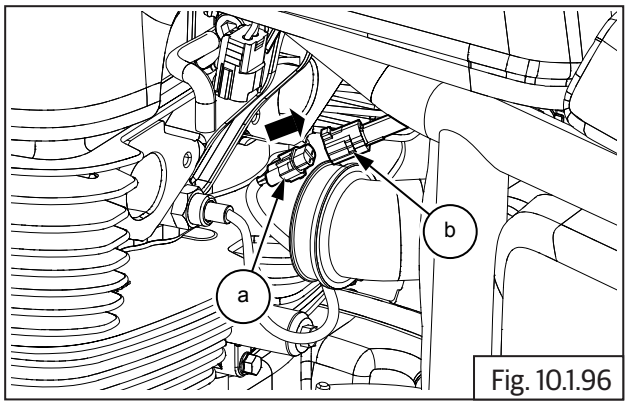

Fig. 10.1.96

- Assemble throttle body cover LH (section 5.2.35).

10.1.29. HEGO (O2) Sensors

- The HEGO sensors are located on the exhaust pipes near the cylinder head.

⚠ WARNING

The engine and exhaust systems get extremely hot during normal operation and can result in serious burns if touched. Make sure exhaust pipes are not hot and is at the same levels of ambient/surrounding temperature, whenever working on the engine or exhaust systems.

NOTE

- *Ensure the engine/exhaust is cold before assembling the HEGO (O2) sensors.*
- *Ensure Ignition switch and Engine stop switch are in OFF position.*

- Insert the RH HEGO (O2) sensor wiring coupler through a deep grooved ring spanner on the sensor hex head tighten HEGO sensor RH **(a)** into exhaust pipe RH **(b)**.

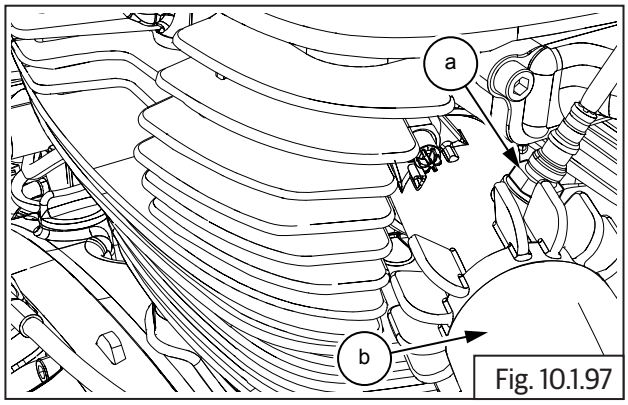

Fig. 10.1.97

	17 mm Deep groove spanner

- Insert the LH HEGO (O2) sensor wiring coupler through a deep grooved ring spanner on the sensor hex head tighten HEGO sensor LH **(a)** into exhaust pipe LH **(b)**.

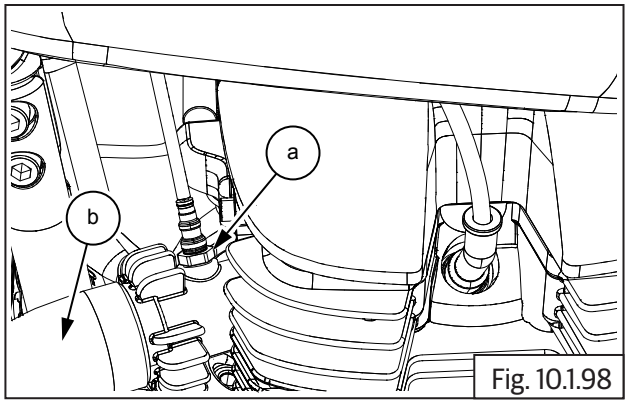

Fig. 10.1.98

	17 mm Deep groove spanner

- Connect HEGO sensor connectors **(a)** from wiring harness located near ignition coil assembly below fuel tank **(b)**.

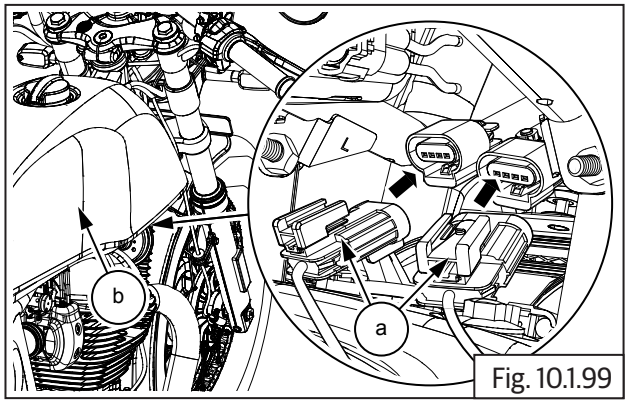

Fig. 10.1.99

- Assemble LH and RH horn assembly (section 11.7).

10.1.30. Intake Air Temperature sensor (IAT)

- Gently locate IAT sensor **(a)** into air filter housing.

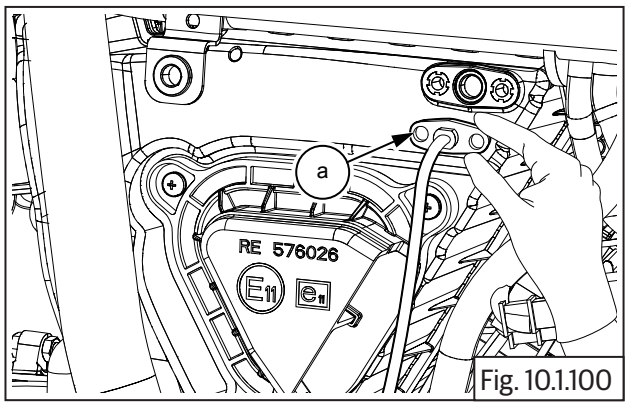

Fig. 10.1.100

- Insert and tighten 2 Nos. Hex socket head cap screw **(M5) (a)** into IAT sensor **(b)**.

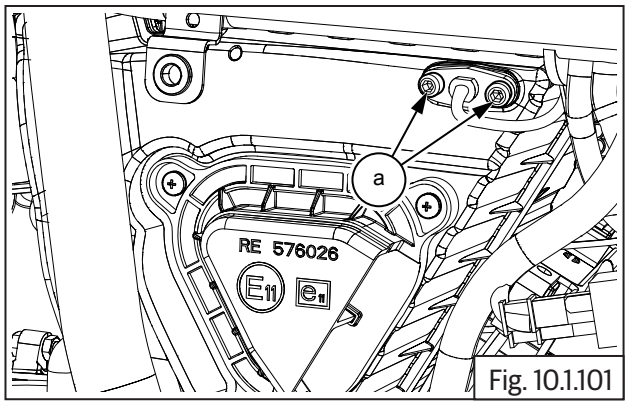

Fig. 10.1.101

	4 mm Allen socket with Ratchet
Torque	2 N-m/0.2 kgf-m

- Ensure IAT sensor **(a)** seated properly.

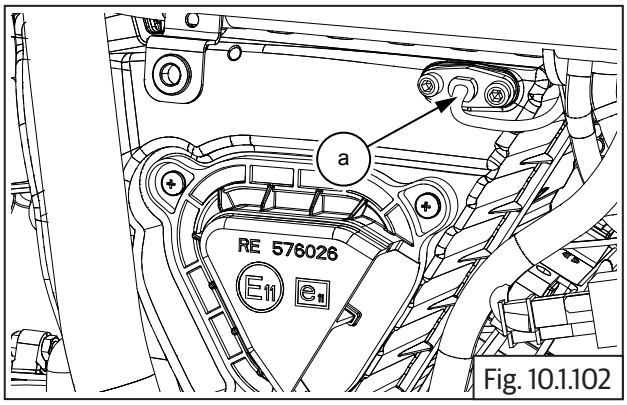

Fig. 10.1.102

- Connect IAT sensor connector **(a)** on the air filter housing **(b)** and ensure locked properly.

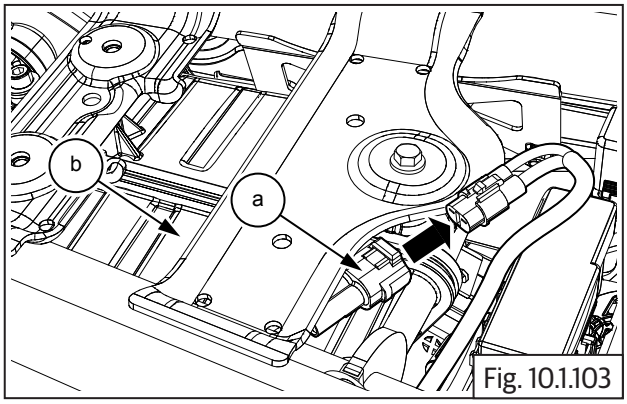

Fig. 10.1.103

- Assemble the following parts:
  - Side panel LH (section 6.7.5).
  - Rider seat (section 6.7.7).
  - Side panel RH (section 6.7.8).

10.1.31. Secondary Air Injection Unit (Solenoid) Air Cut Valve (ACV)

- Ensure Ignition switch and Engine stop switch are in OFF position.
- The ACV is assembled on the top RH side of the air filter housing.
- Ensure grommet **(a)** into air filter **(b)**.

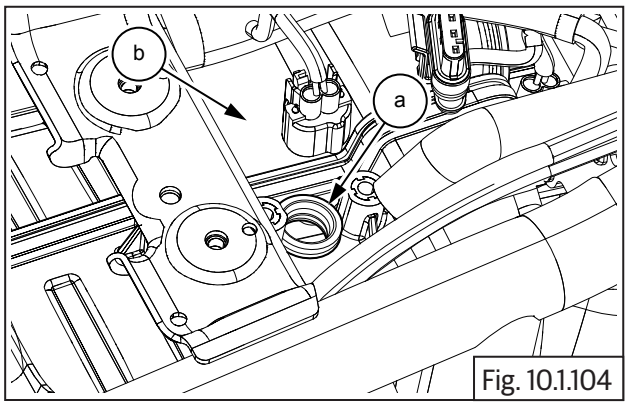

Fig. 10.1.104

- Assemble ACV **(a)** into grommet in air filter **(b)**.

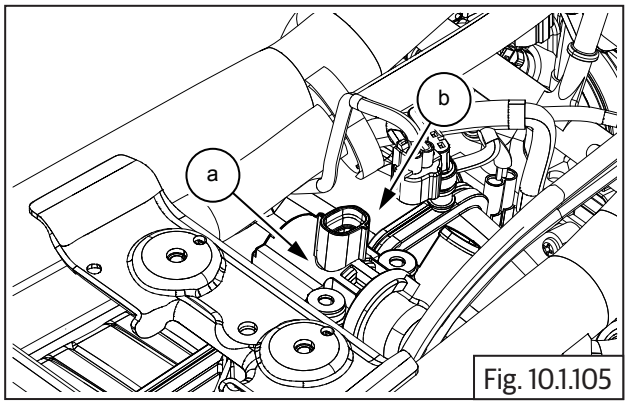

Fig. 10.1.105

- Locate and tighten 2 Nos. Hex socket head cap screws **(M5) (a)** along with washer into ACV **(b)** on air filter.

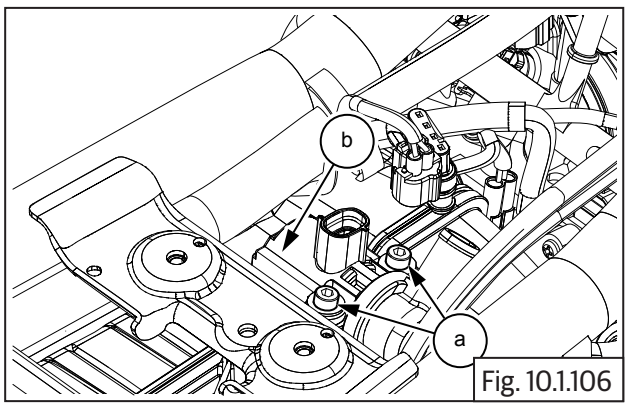

Fig. 10.1.106

	4 mm Allen socket with Ratchet
Torque	2 N-m/0.2 kgf-m

- Insert hose **(a)** into ACV.

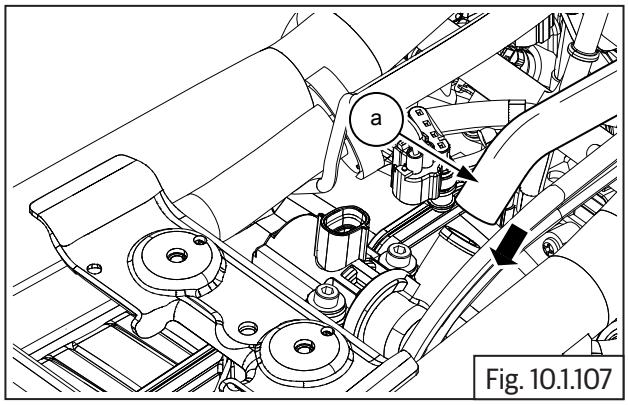

Fig. 10.1.107

- Connect wiring harness connector **(a)** into ACV **(b)**.

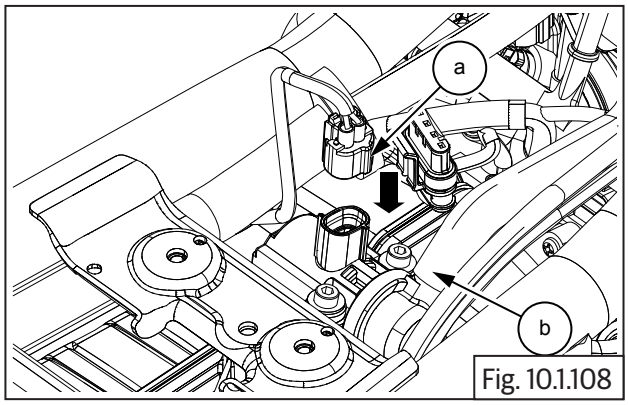

Fig. 10.1.108

- Assemble fuel tank assembly (section 7.1.15).

⚠ CAUTION

Ensure the following:

Fuel is refilled into fuel tank.

Fuel feed and return hoses are connected into fuel rail.

Wiring couplers to fuel pump and low fuel sensor are connected.

EVAP hose pipes are connected.

Water drain hoses are connected.

⚠ WARNING

Gasoline is extremely flammable and highly explosive. Please handle with care. Improper handling can lead to fatal accident or serious injury. Always drain/fill fuel only in a well ventilated area.

Ensure there is no scope for flames or sparks near by while draining/filling fuel.

- Assemble the following parts:
  - Side panel LH (section 6.7.5).
  - Rider seat (section 6.7.7).

10.1.32. Purge Valve

- Locate and install EVAP purge control valve into bracket under the battery tray.
- Connect the inlet **(a)** and outlet **(b)** hoses to EVAP purge control valve.
- Connect the electrical connector **(c)** to EVAP purge control valve.

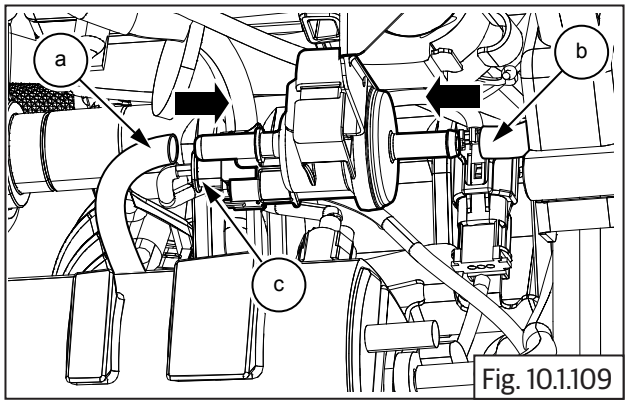

Fig. 10.1.109

- Assembly the following parts:
  - Connect roll over sensor connector (section 10.1.33).
  - Infill mudguard (section 6.6.10).
  - Rear mudguard (section 6.6.11).
  - Engine control unit (ECU) (section 10.1.21).
  - Side panel LH (section 6.7.5)
  - Rider seat (section 6.7.7)..
  - Side panel RH (section 6.7.8).

10.1.33. Roll Over Sensor

- The Roll over sensor is located on the frame RH side above battery.
- Locate and tighten Hex socket head cap screw **(M5) (a)** roll over sensor **(b)** into frame **(c)**.

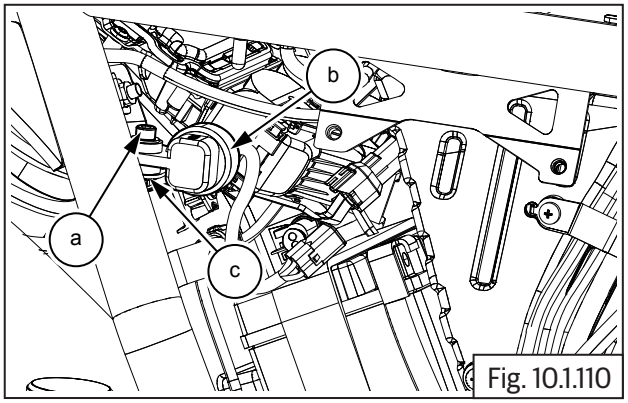

Fig. 10.1.110

	4 mm Allen socket with Ratchet
Torque	2 N-m/0.2 kgf-m

- Connect roll over sensor connector **(a)** to wiring harness connector **(b)** located above battery RH.

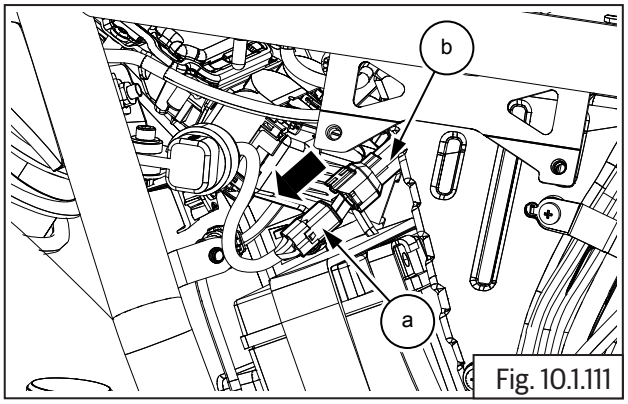

Fig. 10.1.111

- Assemble the following parts:
  - Rider seat (section 6.7.7).
  - Side panel RH (section 6.7.8).

10.1.34. Ignition Coil

- Assemble ignition coil RH **(a)** into bracket **(b)**.

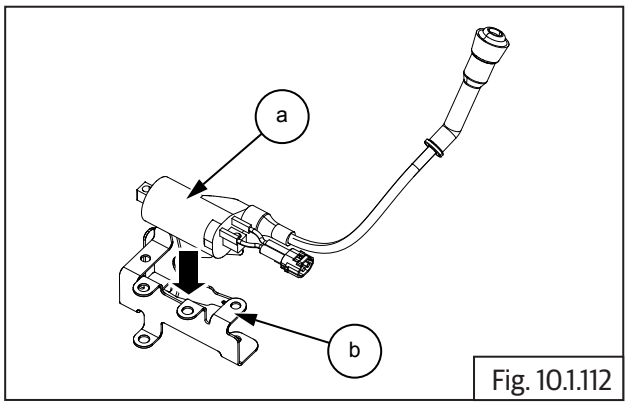

Fig. 10.1.112

- Insert and tighten 2 Nos. slot head round screws **(M5) (a)** into ignition coil RH **(b)**.

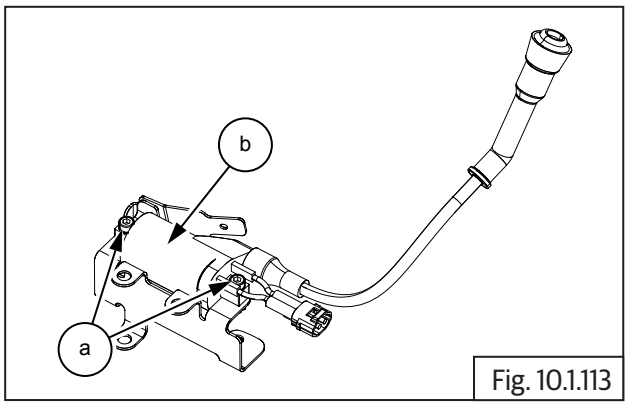

Fig. 10.1.113

	Screw driver (+)

- Assemble ignition coil LH **(a)** into bracket **(b)**.

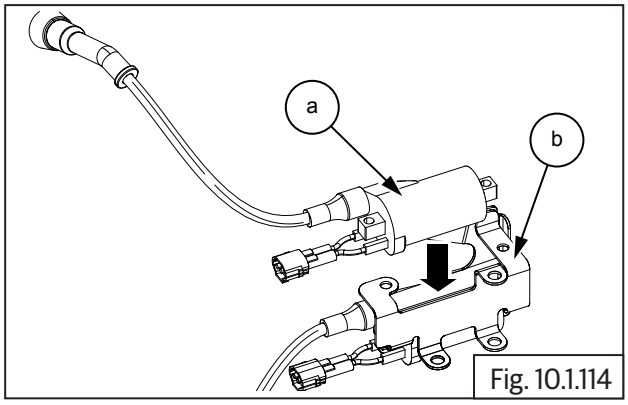

Fig. 10.1.114

- Insert and tighten 2 Nos. slot head round screws (M5) **(a)** into ignition coil RH **(b)**.

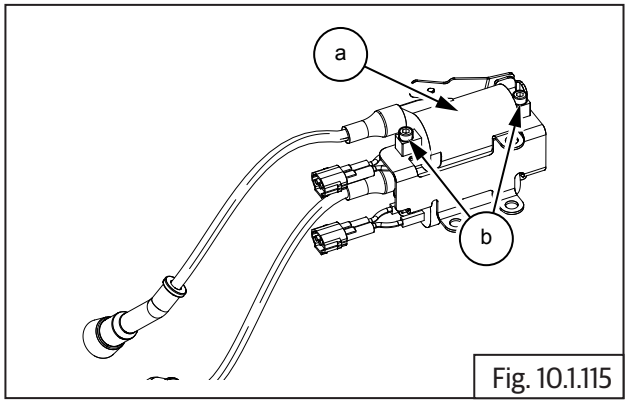

Fig. 10.1.115

	Screw driver (+)

- Locate ignition coil assembly **(a)** along with HT cables **(b)**.

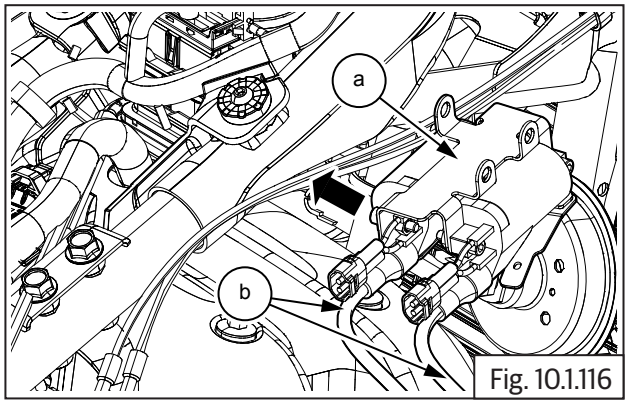

Fig. 10.1.116

- Locate and tighten 2 Nos. Hex head collar bolt **(M6) (a)** into main frame RH **(b).**

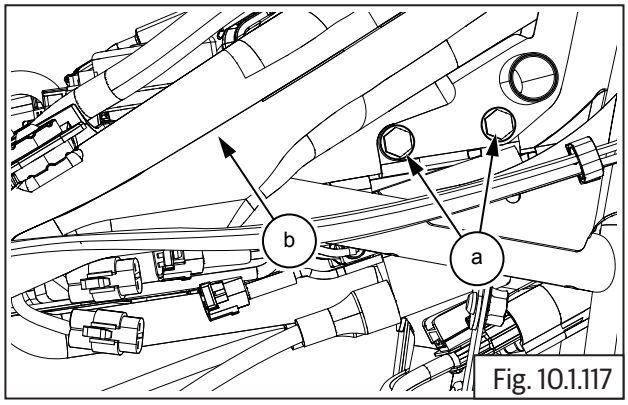

Fig. 10.1.117

	10 mm Socket with Ratchet
Torque	10 N-m/1 kgf-m

- Locate and tighten Hex head collar bolt **(M6) (a)** into main frame LH **(b)**.

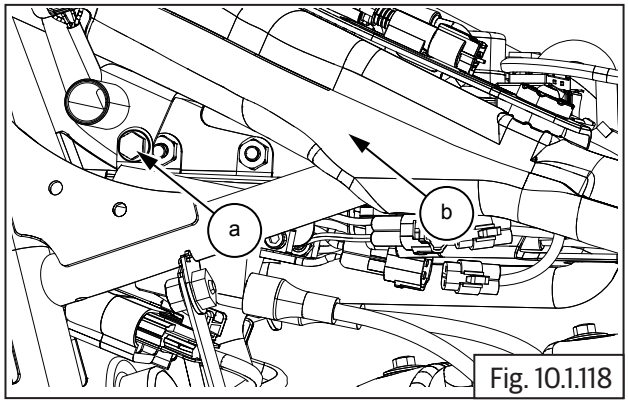

Fig. 10.1.118

	10 mm Socket with Ratchet
Torque	10 N-m/1 kgf-m

- Connect ignition coil connector LH and RH **(a)** from wiring harness **(b)** located below fuel tank.

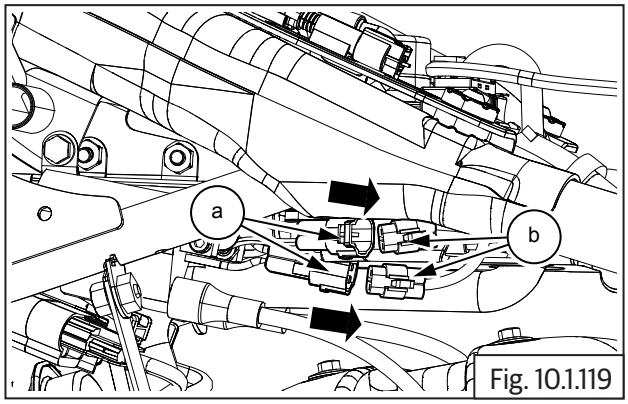

Fig. 10.1.119

- Gently insert HT cable RH **(a)** into spark plug **(b)**.

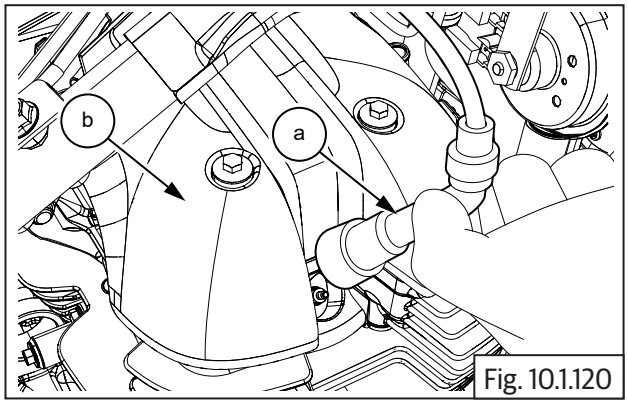

Fig. 10.1.120

- Gently insert HT cable LH **(a)** into spark plug.

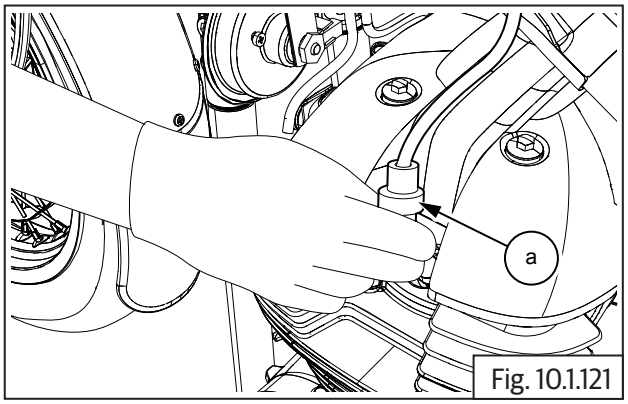

Fig. 10.1.121

- Assemble fuel tank (section 7.1.15).

⚠ CAUTION

Ensure the following:

Fuel is refill into fuel tank.

Fuel feed and return hoses are connected into fuel rail.

Wiring couplers to fuel pump and low fuel sensor are connected.

EVAP hose pipes are connected.

Water drain hose are connected.

⚠ WARNING

Gasoline is extremely flammable.

- Assemble rider seat Assembly (section 6.7.7).
- Assemble side panel RH (section 6.7.8).

10.1.35. Crank Position Sensor

- The crank position sensor is located inside the engine cover LH and attached to the stator coil.
- Locate starter coil along with crank shaft position sensor wire assembly **(a)** into cover LH **(b)**.

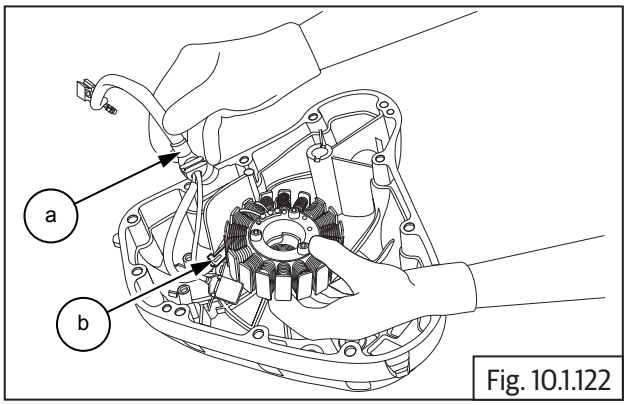

Fig. 10.1.122

- Assemble guide plate **(a)** into LH cover.

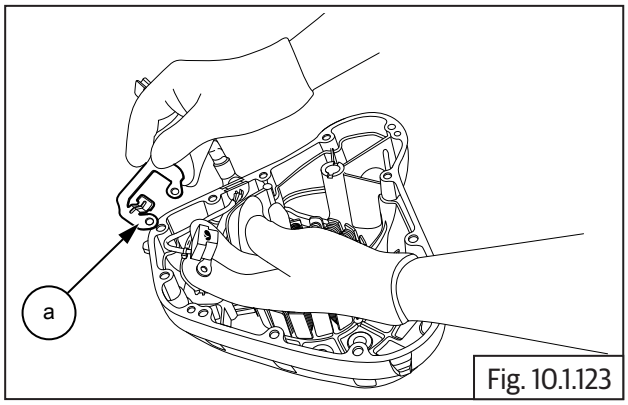

Fig. 10.1.123

- Locket and tighten 2 Nos Hex socket head screws **(M5) (a)** into guide plate **(b)**.

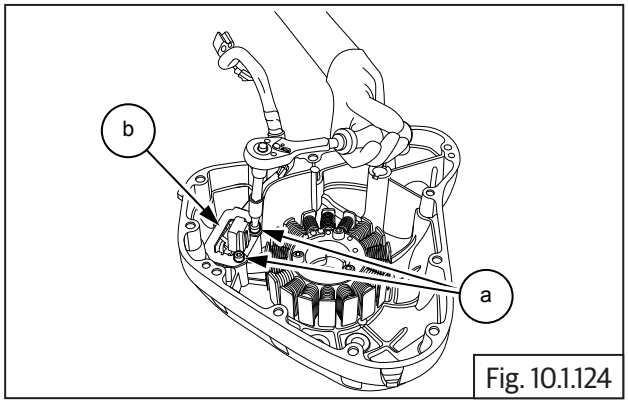

Fig. 10.1.124

	4 mm Allen key with Ratchet
Torque	8 N-m/0.8 kgf-m

- Locate and tighten 3 Nos. Hex socket head screws **(M5) (a)** into LH cover that hold starter coil **(b)**.

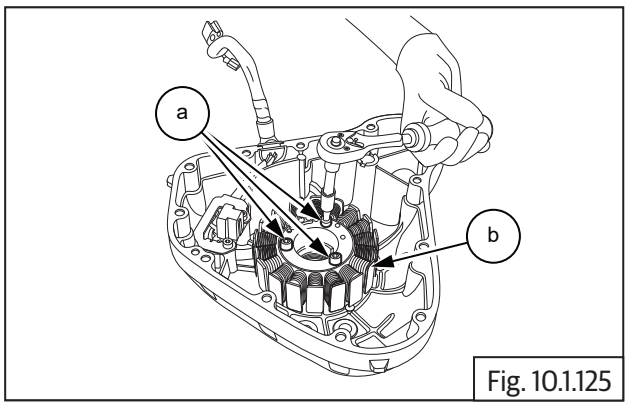

Fig. 10.1.125

	4 mm Allen key with Ratchet
Torque	10 N-m/1.0 kgf-m

- Locate crank shaft position sensor and wiring harness behind engine on RH, near RR module.
- Connect crank position sensor connector **(a)** to harness connector **(b)**.
- Ensure the wiring harness strapped properly.

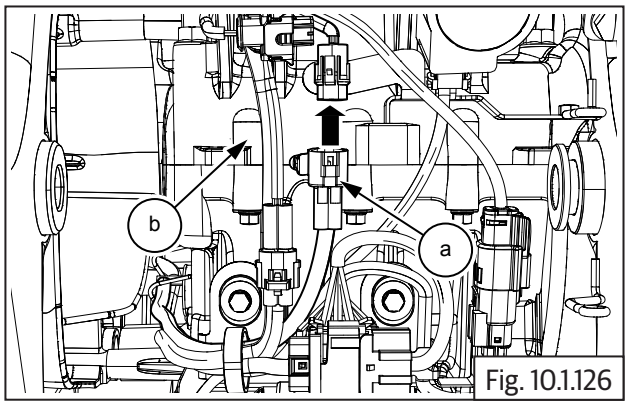

Fig. 10.1.126

- Assemble the following parts:
  - FD sprocket cover (Section 5.2.54).
  - Cover LH from Engine Refer (Section 5.2.45).
  - Fill engine oil.

10.1.36. Gear Position Sensor

- The gear position sensor is located on the crankcase LH before FD sprocket
- Ensure Ignition switch and Engine stop switch are in OFF position.
- Gently locate gear position sensor **(a)** below FD sprocket.

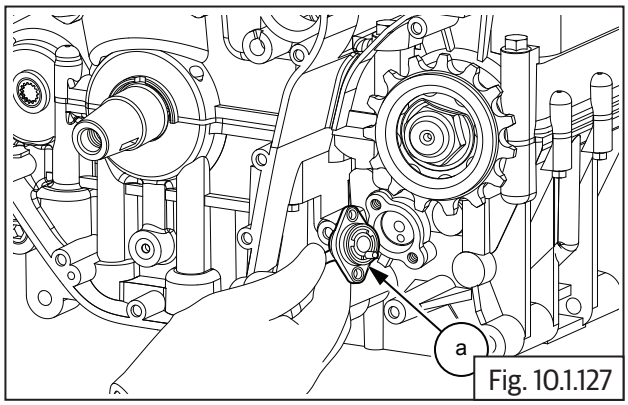

Fig. 10.1.127

- Gently locate gear position sensor wiring holder over gear position sensor and locate the bracket **(a)**.

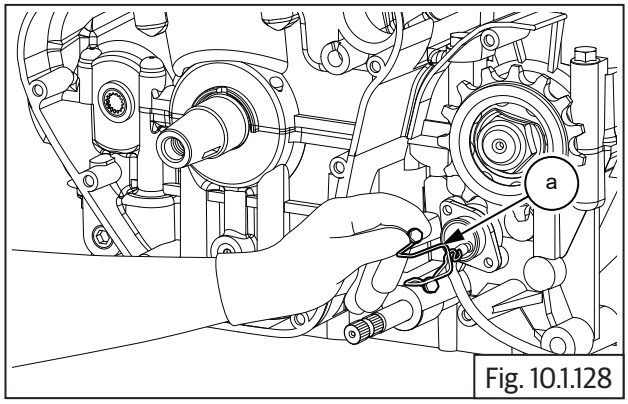

Fig. 10.1.128

- Insert and tighten 2 Nos. Hex head bolts **(M6) (a)** located below FD sprocket.

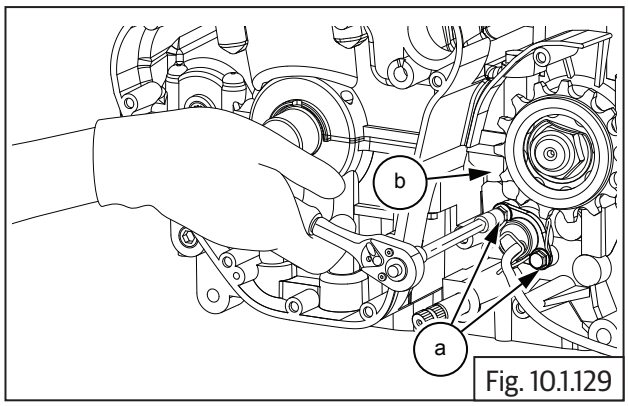

Fig. 10.1.129

	10 mm Allen socket With Ratchet
Torque	10 N-m/1.0 kgf-m

- Connect gear position sensor connector **(a)** to wiring harness connector located on rear side of engine **(b)**.
- Ensure connector is locked properly and wiring is routed correctly.

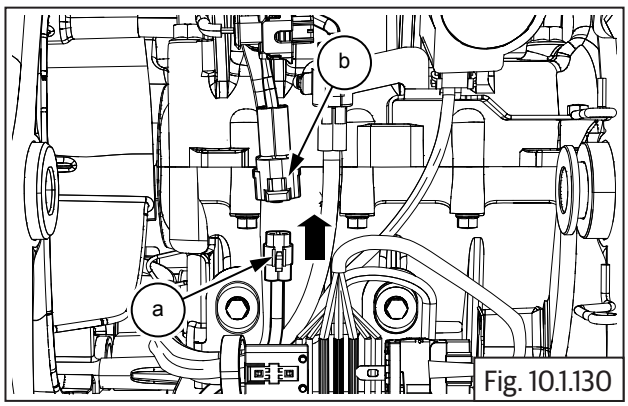

Fig. 10.1.130

- Assemble FD sprocket cover (Section 5.4.12).

10.1.37. Clutch Switch

- Locate and tighten 2 Nos of screws **(a)** into clutch lever **(b)**.

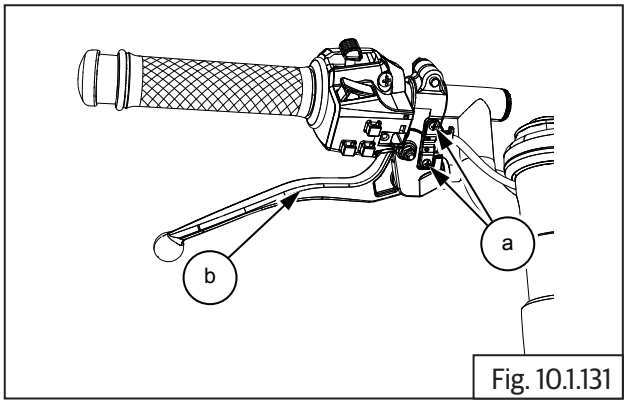

Fig. 10.1.131

	Screw Driver (+)

- Connect connectors **(a)** into clutch switch on handlebar LH **(b)**.

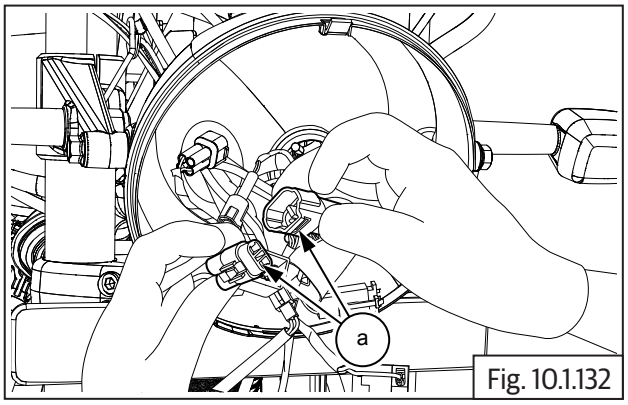

Fig. 10.1.132

- Assemble headlamp assembly (section 11.12.8).

10.1.38. Side Stand Switch

⚠ CAUTION

Ensure the motorcycle is upright on a firm and flat surface.

- Locate a scissor jack **(a)** under cradle frame **(b)** and lift motorcycle such that the front wheel is off the ground by minimum 6 inches (or 15 cm).

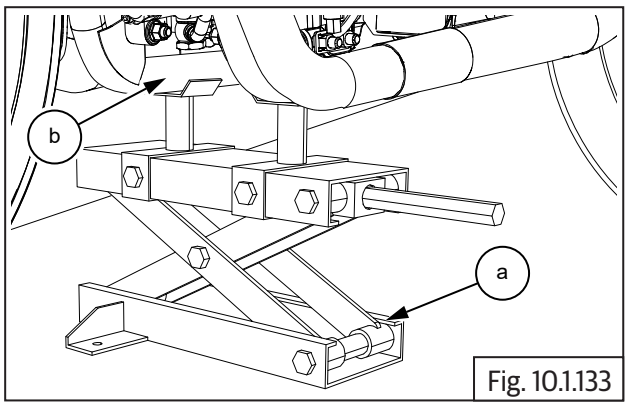

Fig. 10.1.133

- Ensure side stand is released.
- Locate and tighten Hex socket head cap screw **(M6) (a)** into side stand switch located on engine frame LH **(b)**.

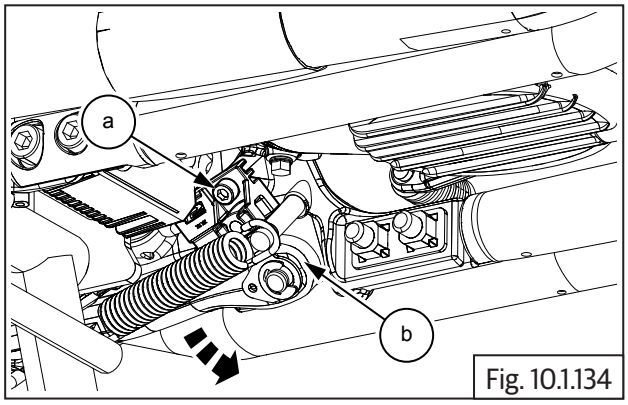

Fig. 10.1.134

	5 mm Allen socket With Ratchet
Torque	8 N-m/0.8 kgf-m

- Connect side stand connector **(a)** into wiring harness connector located behind engine frame RH **(b)**.
- Ensure connectors are locked properly and routed correctly.

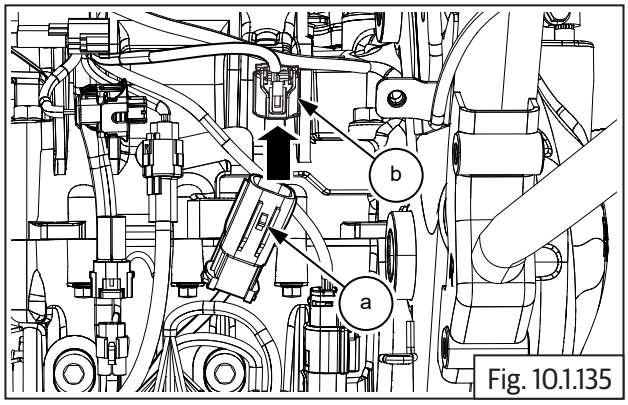

Fig. 10.1.135

10.1.39. Starter Motor Solenoid

- Locate solenoid connectors below battery tray Ensure ignition off.
- Gently slide and locate solenoid coil **(a)** into battery tray bracket **(b)**.

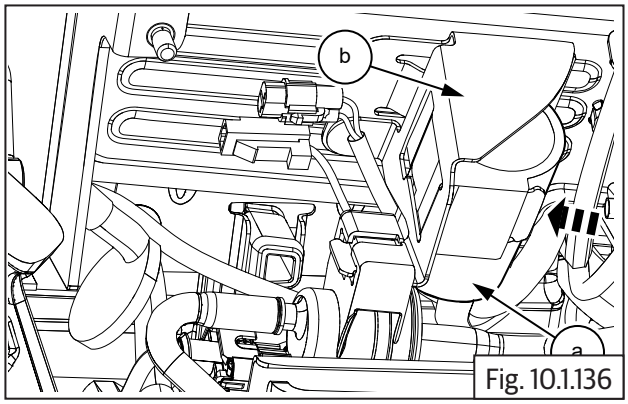

Fig. 10.1.136

- Connect starter solenoid connectors **(a)** into wiring harness.

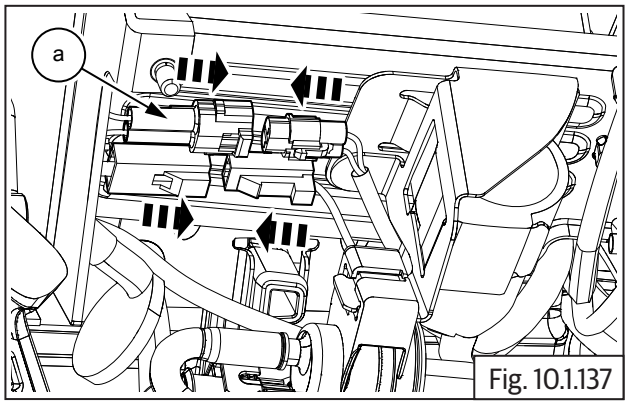

Fig. 10.1.137

- Assemble the following:
  - Rear mudguard in fill cover (section 6.6.10).
  - Wheel speed sensor front and rear (section 9.3.8).

10.1.40. Actuator

Actuator Tests

- The following actuators can be tested for their functionality using the diagnostic tool/ PC software.
  1. Fuel Pump
  2. Injector
  3. Ignition Coil
  4. O2 sensor heater
  5. Malfunction Indication Lamp (MIL)
  6. Idle Air Control Valve (IACV)
  7. Canister Purge Valve (CPV)
  8. Secondary Air Injection Solenoid (SAI)
  9. Accessory Relay

Test Procedure

- **Entry Conditions**
  1. Actuator tests can be carried out when the ignition key and kill switch are ON and engine speed is 0.
  2. For IACV alone, engine speed can be greater than 0.
  3. For actuation of injector and ignition coil, gear should be in neutral. If not in neutral, clutch lever should be pressed.
  4. Errors associated to the corresponding actuator, if present, will inhibit the actuation.
- **Procedure**

  A. In EOL software
  1. Connect the tool with the diagnostic coupler in the vehicle and connect it with PC using the USB cable.
  2. Select the option "EOL" & select Actuator.
  3. Select the required actuator and press. 

  B. In NACSII tool
  1. Connect the tool with the diagnostic coupler in the vehicle

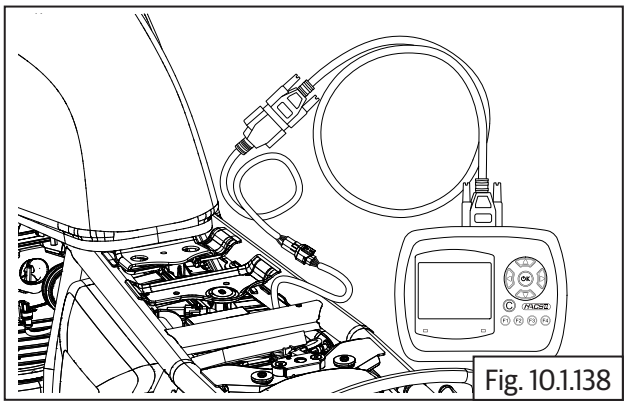

Fig. 10.1.138

  2. Select the vehicle model name and select Bosch Engine Management System
  3. Select the option Actuator
  4. Select the required actuator and press F3 to actuate

- **Method of verification**

1. For fuel pump, when actuated, an audible sound can be heard for 5 seconds .

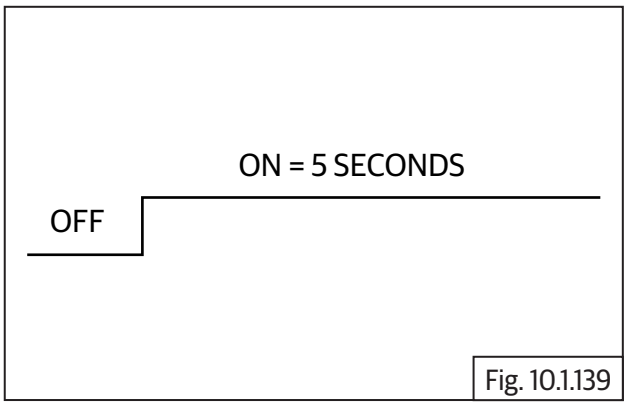

Fig. 10.1.139

2. Prior to actuation of injector, prime the fuel pump 3 times to build up sufficient pressure in fuel line. To ensure injectors are working properly, remove the throttle body from the intake manifold, connect all the injector couplers and actuate. When actuated, 3 pulses of fuel spray from the injector can be seen. Each injector can be actuated and checked individually

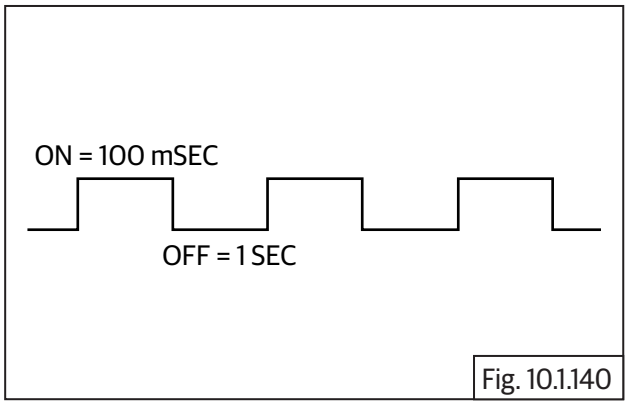

Fig. 10.1.140

3. Prior to the actuation of ignition coil, remove the suppressor cap and connect with an external spark plug and ground it to engine. Do not ground the ignition coil directly. When actuated, 3 sparks can be seen. Each ignition can be actuated and checked individually.

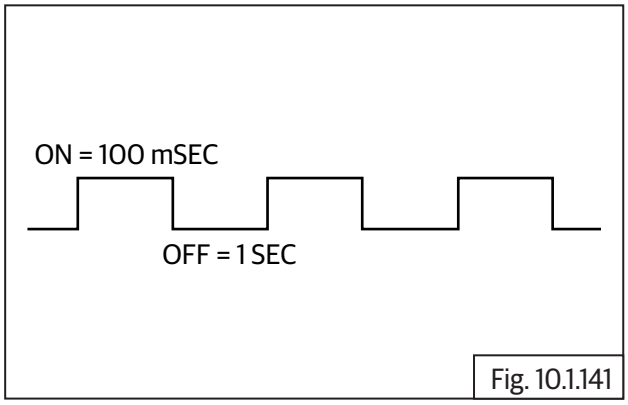

Fig. 10.1.141

4. To check O2 sensor heater, the sensor has to be removed from the exhaust pipe. When actuation is requested, the sensor will get heated up and this happens for 5 seconds.

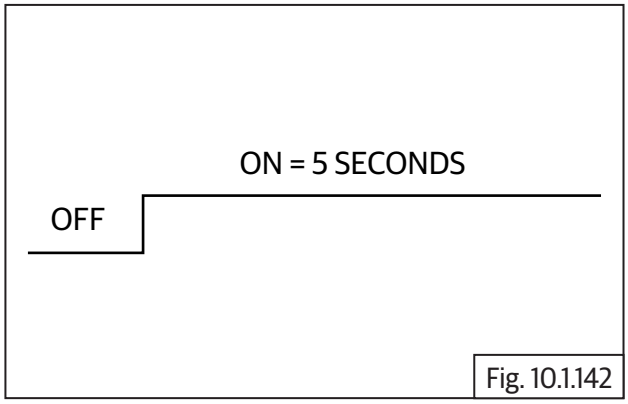

Fig. 10.1.142

5. When MIL is actuated, the bulb goes ON & OFF for 5 times.

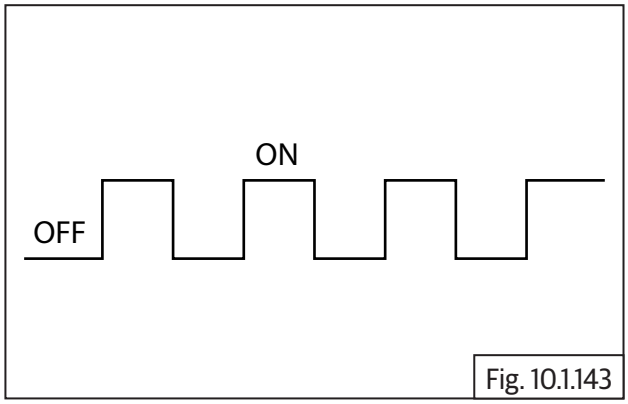

Fig. 10.1.143

6. Start and idle the engine before actuating IACV. If actuation command is given, one can observe the engine rpm rising up & falling down the target idle speed. Once actuation is completed, it settles back to target idle speed.

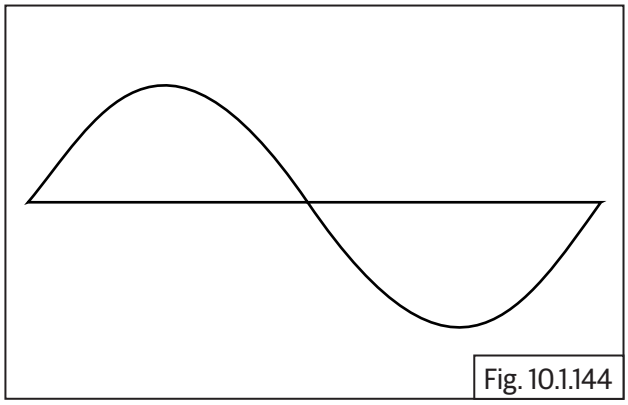
Fig. 10.1.144

7. When CPV is actuated, a pulsating sound can be observed. If not, the canister purge valve has to be manually touched to feel actuation.

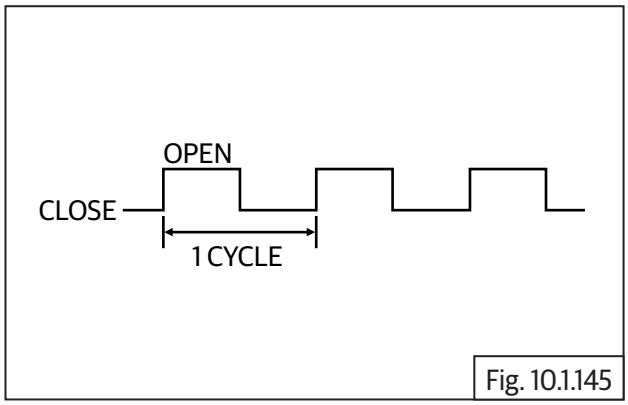

Fig. 10.1.145

8. SAI solenoid will get actuated for 20 cycles

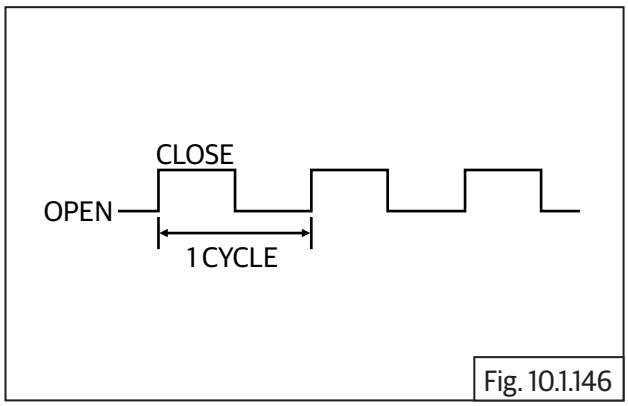

Fig. 10.1.146

9. Accessory relay gets actuated for 5 cycles.

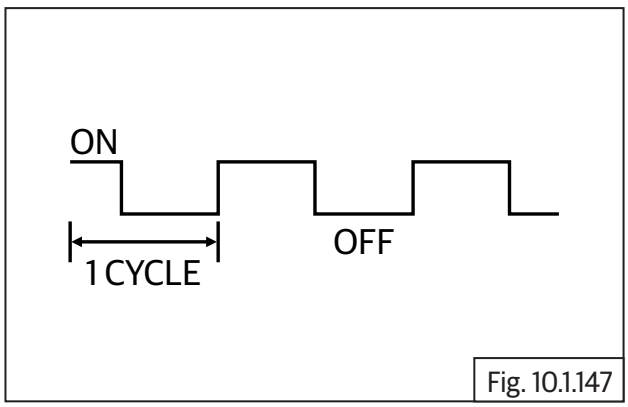

Fig. 10.1.147

EMS DTC CODES

10.2 EMS DTC Codes

Sl. No.	P-Code	EMS Component	DTC Description
1	P0123	Throttle Position Sensor	Circuit High/Max Error
2	P0122	Throttle Position Sensor	Circuit Low/Min Error
3	P0335	Crankshaft Position Sensor	Crankshaft Position Sensor "A" Circuit
4	P0112	Intake Air Temperature Sensor	Intake Air Temperature Sensor 1 Circuit Low/Bank 1
5	P0113	Intake Air Temperature Sensor	Intake Air Temperature Sensor 1 Circuit High/Bank 1
6	P0107	Manifold Absolute Pressure Sensor	Manifold Absolute Pressure/Barometric Pressure Circuit Low Input
7	P0108	Manifold Absolute Pressure Sensor	Manifold Absolute Pressure/Barometric Pressure Circuit High Input
8	P0197	Engine Oil Temperature Sensor	Engine Oil Temperature Sensor Low
9	P0198	Engine Oil Temperature Sensor	Engine Oil Temperature Sensor High
10	P0132	O_2 sensor (binary/linear) signals	O_2 Sensor Circuit High Voltage/Bank 1 Sensor 1 RH
11	P013	O_2 Sensor (binary/linear) Signals	O_2 Sensor Circuit Low Voltage/Bank 1 Sensor 1 RH
12	P0130	O_2 Sensor (binary/linear) Signals	O_2 Sensor Circuit/Bank 1 Sensor 1/NPL RH
13	P0134	O_2 Sensor (binary/linear) Signals	O_2 Sensor Circuit No Activity Detected/Bank 1 Sensor 1 RH
14	P0152	O_2 sensor (binary/linear)	O_2 Sensor Circuit High Voltage/Bank 2 Sensor 1 LH
15	P0151	O_2 Sensor (binary/linear)	O_2 Sensor Circuit Low Voltage/Bank 2 Sensor 1 LH
16	P0150	O_2 Sensor (binary/linear)	O_2 Sensor Circuit/NPL/Bank 2 Sensor 1 LH
17	P0154	O_2 Sensor (binary/linear)	O_2 Sensor Circuit No Activity Detected/Bank 2 Sensor 1 LH
18	P0917	Gear Shift Position Sensor	Gear Shift Position Circuit High
19	P0916	Gear Shift Position Sensor	Gear Shift Position Circuit Low

Sl. No.	P-Code	EMS Component	DTC Description
20	P0500	Vehicle Speed Sensor	Vehicle Speed Sensor "A" Range/Performance
21	P0459	Evaporative Emission System Purge Control Valve	EVAP System Purge Control Valve "A" Circuit High
22	P0458	Evaporative Emission System Purge Control Valve	EVAP System Purge Control Valve "A" Circuit Low
23	P0444	Evaporative Emission System Purge Control Valve	EVAP System Purge Control Valve "A" Circuit Open
24	P0511	Idle Air Control System	Idle Air Control Circuit OL
25	P0509	Idle Air Control System	Idle Air Control System Circuit High
26	P0508	Idle Air Control System	Idle Air Control System Circuit Low
27	P2300	Ignition Coil Primary Control Circuits Rh	Ignition coil primary control circuits SCG RH
28	P2303	Ignition Coil Primary Control Circuits LH	Ignition coil primary control circuits SCG LH
29	P0030	O_2 Sensor Heater 1	HO_2S Heater Control Circuit RH OL
30	P0031	O_2 Sensor Heater 1	HO_2S Heater Control Circuit Low RH
31	P0032	O_2 Sensor Heater 1	HO_2S Heater Control Circuit High RH
32	P0050	O_2 Sensor Heater 2	HO_2S Heater Control Circuit LH OL
33	P0051	O_2 Sensor Heater 2	HO_2S Heater Control Circuit Low LH
34	P0052	O_2 Sensor Heater 2	HO_2S Heater Control Circuit High LH
35	P0413	Secondary air injection system	Secondary Air Injection System Switching Valve "A" Circuit Open
36	P0410	Secondary air injection system	Secondary Air Injection System Malfunction SCB
37	P0412	Secondary air injection system	Secondary Air Injection System Switching Valve A Circuit Malfunction SCG
38	P0201	Fuel Injector	Injector Circuit/Open – Cylinder 1 RH
39	P0262	Fuel Injector	Cylinder 1 Injector Circuit High RH

Sl. No.	P-Code	EMS Component	DTC Description
40	P0261	Fuel Injector	Cylinder 1 Injector Circuit Low RH
41	P0202	Fuel Injector	Injector Circuit/Open - Cylinder 2 LH
42	P0265	Fuel Injector	Cylinder 2 Injector Circuit High LH
43	P0264	Fuel Injector	Cylinder 2 Injector Circuit Low LH

ELECTRICAL SYSTEM

CONTENTS PAGE

11 Electrical System 671

11.1 Headlamp and Cluster Dismantling 671

11.1.1 Headlamp Reflector from Housing 671
11.1.2 Pilot Bulb from Reflector 671
11.1.3 Headlamp Bulb from Reflector 672
11.1.4 Connectors and Sensors from Headlamp Housing 672
11.1.5 Headlamp Housing from Holder LH & RH 674
11.1.6 Direction Trafficators from Headlamp Holder 674
11.1.7 Cluster Assembly 675
11.1.8 Headlamp Housing Holders from Fork Legs 675

11.2 Tail Lamp Dismantling 676

11.2.1 Tail Lamp 676

11.3 Brake Lamp Connectors Dismantling 676

11.3.1 Brake Lamp Connector - Rear 676
11.3.2 Brake Lamp Connector - Front 677

11.4 Trafficators Dismantling 677

11.4.1 Direction Trafficators - Rear 677
11.4.2 Trafficator bulb - Front 677

11.5 Battery Dismantling 679

11.5.1 Battery Terminals 679
11.5.2 Battery Tray 680
11.5.3 Starter Solenoid 681
11.5.4 RR Unit 682

11.6 Horn Dismantling 682

Inspection 683

Assembly 684

11.7 Horn Assembly 684

11.8 Battery Assembly 684

CONTENTS PAGE

11.8.1 RR Unit 684
11.8.2 Starter Solenoid 685
11.8.3 Battery Tray 685
11.8.4 Battery Terminals 686
11.9 Trafficators Assembly 687
11.9.1 Direction Trafficator Bulb - Front 687
11.9.2 Direction Trafficators - Rear 689
11.10 Brake Lamp Connectors Assembly 689
11.10.1 Brake Lamp Connector - Rear 689
11.10.2 Brake Lamp Connector - Front 689
11.11 Tail Lamp Assembly 690
11.11.1 Tail Lamp 690
11.12 Headlamp and Cluster Assembly 690
11.12.1 Headlamp Housing Holders into Fork Legs 690
11.12.2 Cluster Assembly 691
11.12.3 Direction Trafficators into Headlamp Holder 691
11.12.4 Headlamp Housing into Holder LH & RH 692
11.12.5 Connectors and Sensors into Headlamp Housing 692
11.12.6 Headlamp Bulb into Reflector 694
11.12.7 Pilot Bulb into Reflector 694
11.12.8 Headlamp Reflector into Housing 694
11.13 Wiring Diagrams 702

Electrical System Components - Front

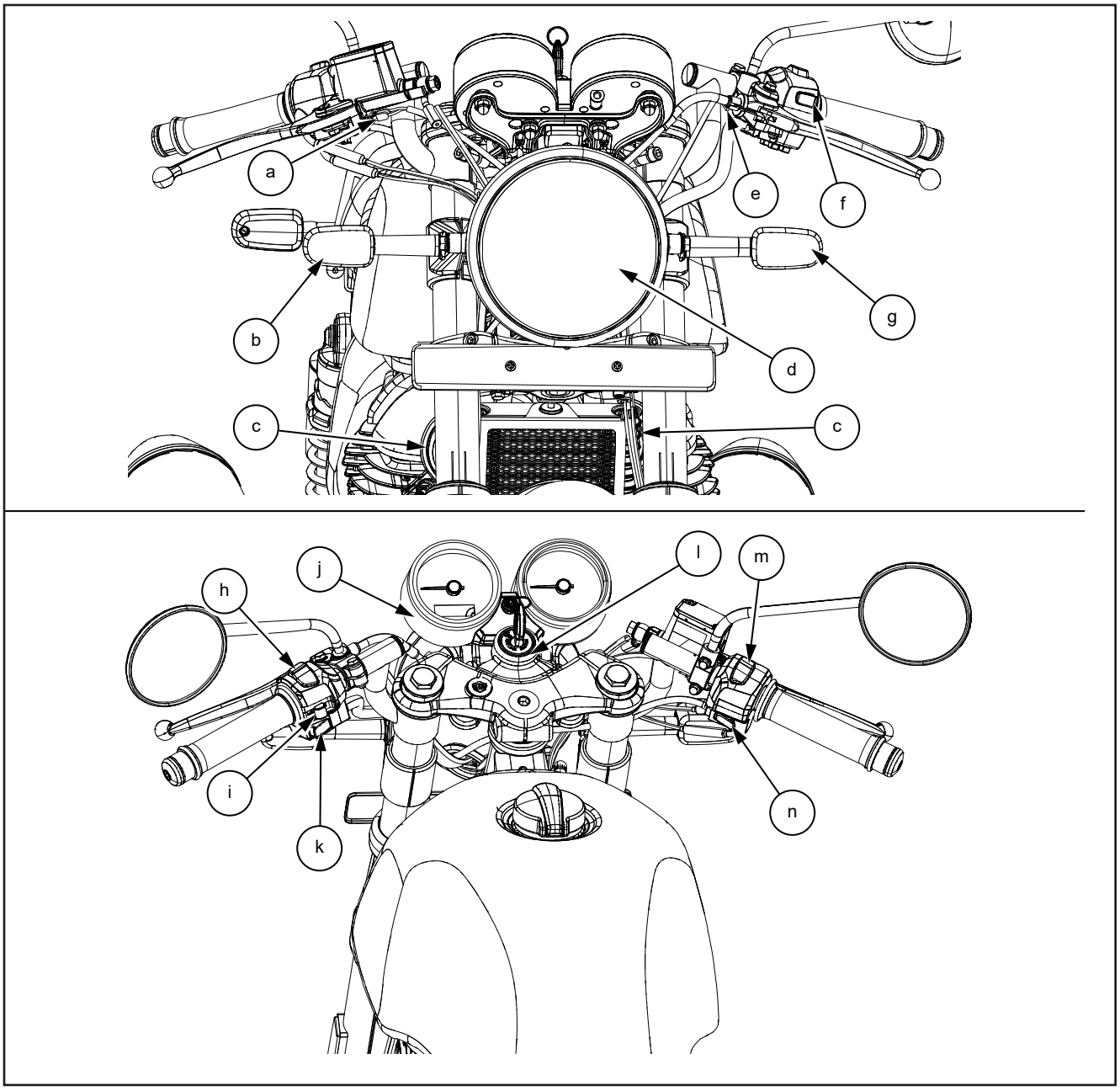

Item No.	Description	Quantity	Item No.	Description	Quantity
a	Front Brake Switch	1	h	Headlamp Low Beam/High Beam Switch	1
b	Trafficator Front RH	1	i	Trafficator Switch	1
c	Horn HT/LT	2	j	Instrument Cluster	1
d	Headlamp Assembly	1	k	Horn Button	1
e	Clutch Switch	1	l	Ignition Key Cylinder	1
f	Headlamp Pass Switch	1	m	Ignition Kill Switch	1
g	Trafficator Front LH	1	n	Starter Switch	1

Electrical System Components - Rear

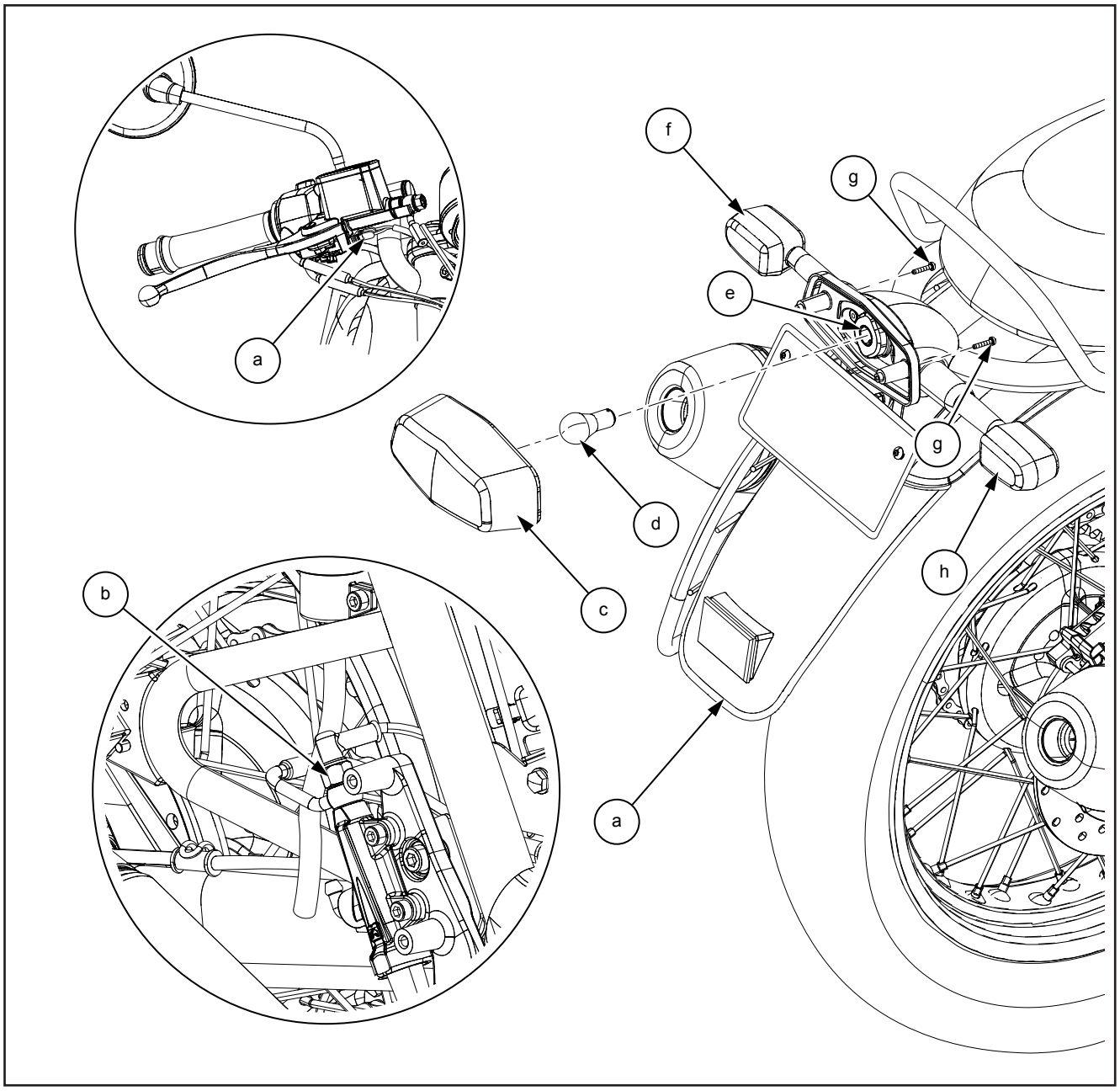

Item No.	Description	Quantity	Item No.	Description	Quantity
a	Front Brake Lamp Switch (RH Handlebar)	1	e	Tail Lamp Bulb Holder	1
b	Rear Brake Lamp Switch	1	f	Trafficator LH	1
c	Tail Lamp Lens	1	g	Tail Lamp Lens Screws	2
d	Tail Lamp Bulb	1	h	Trafficator RH	1

Headlamp and Cluster

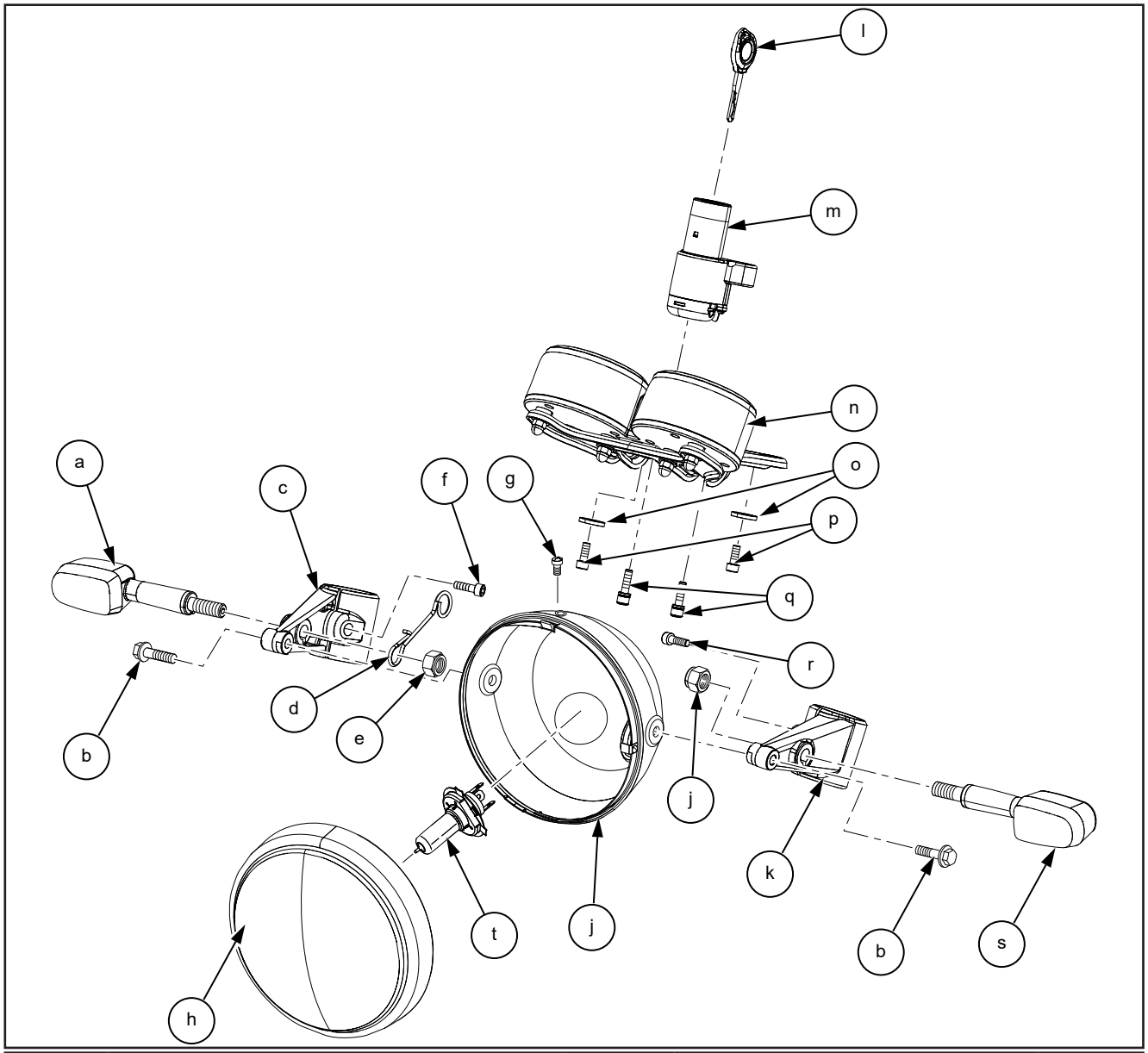

Item No.	Description	Quantity	Item No.	Description	Quantity
a	Trafficator Assembly with Bulb - Front RH	1	k	Headlamp Holder LH	1
b	Hex Flange Bolt M8 x 1.25 x 30 RH	2	l	Ignition Key	1
c	Headlamp Holder RH	1	m	Ignition Key Set	1
d	Wire Guide, Throttle Cable	1	n	Cluster	1
e	Hex Nut M12 x 1.25	1	o	Washer	2
f	Hex Socket HD. Cap Screw, M6 x 20 RH	1	p	Hex Socket Hd. Cap Screw, M6 x 20	2
g	Screw	1	q	Hex Socket Hd. Cap Screw, M6 x 20 RH	2
h	Headlamp Rim	1	r	Hex Flange Bolt M8 x 1.25 x 30 RH	1
i	Headlamp Housing	1	s	Trafficator Assembly With Bulb - Front RH	1
j	Hex Nut M12 x 1.25	1	t	Headlamp Bulb (Halogen)	1

Charging System

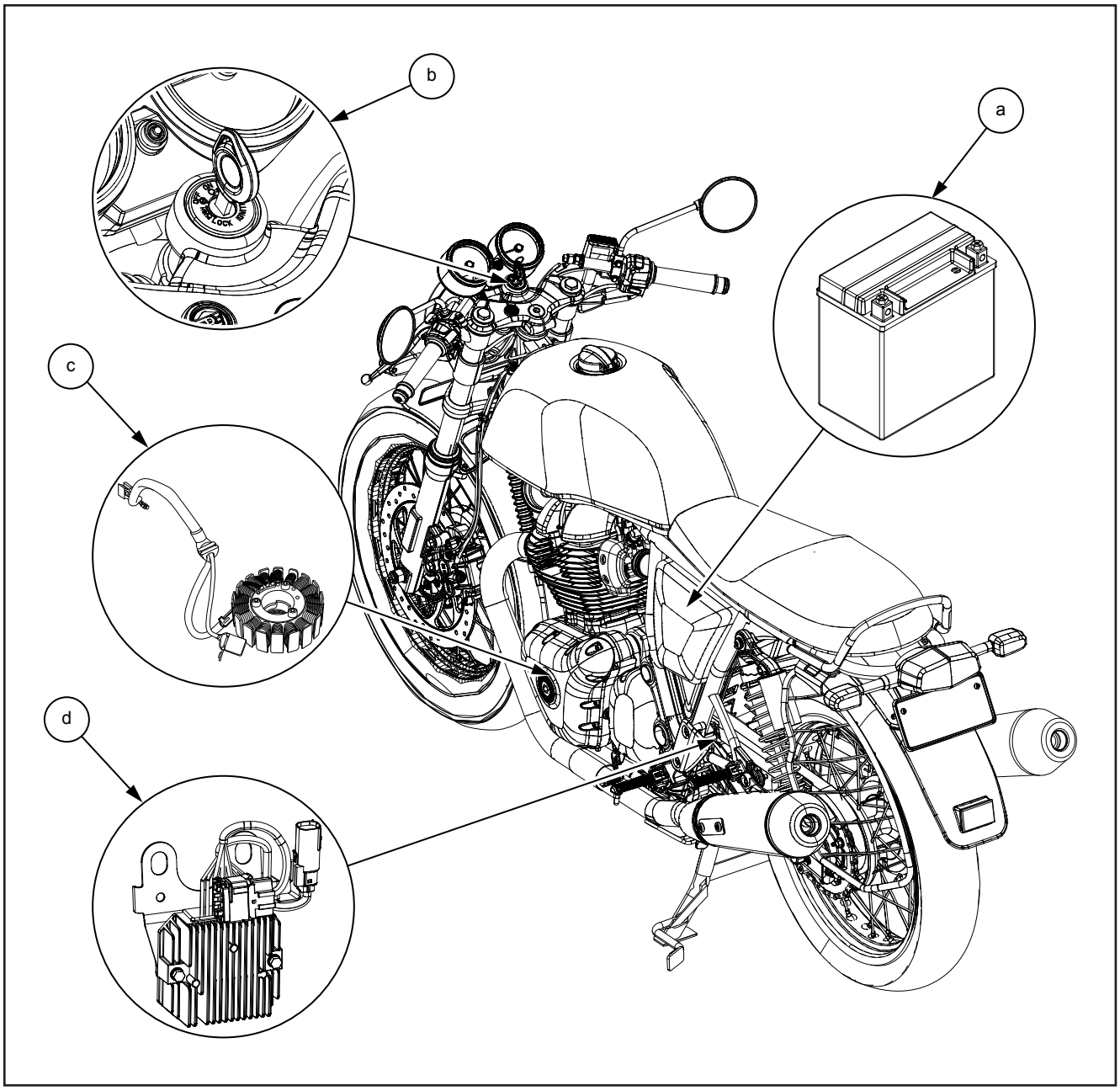

Item No.	Description	Quantity
a	Battery	1
b	Ignition Key	1
c	Stator Coil	1
d	Regulator and Rectifier Module	1

Charging System

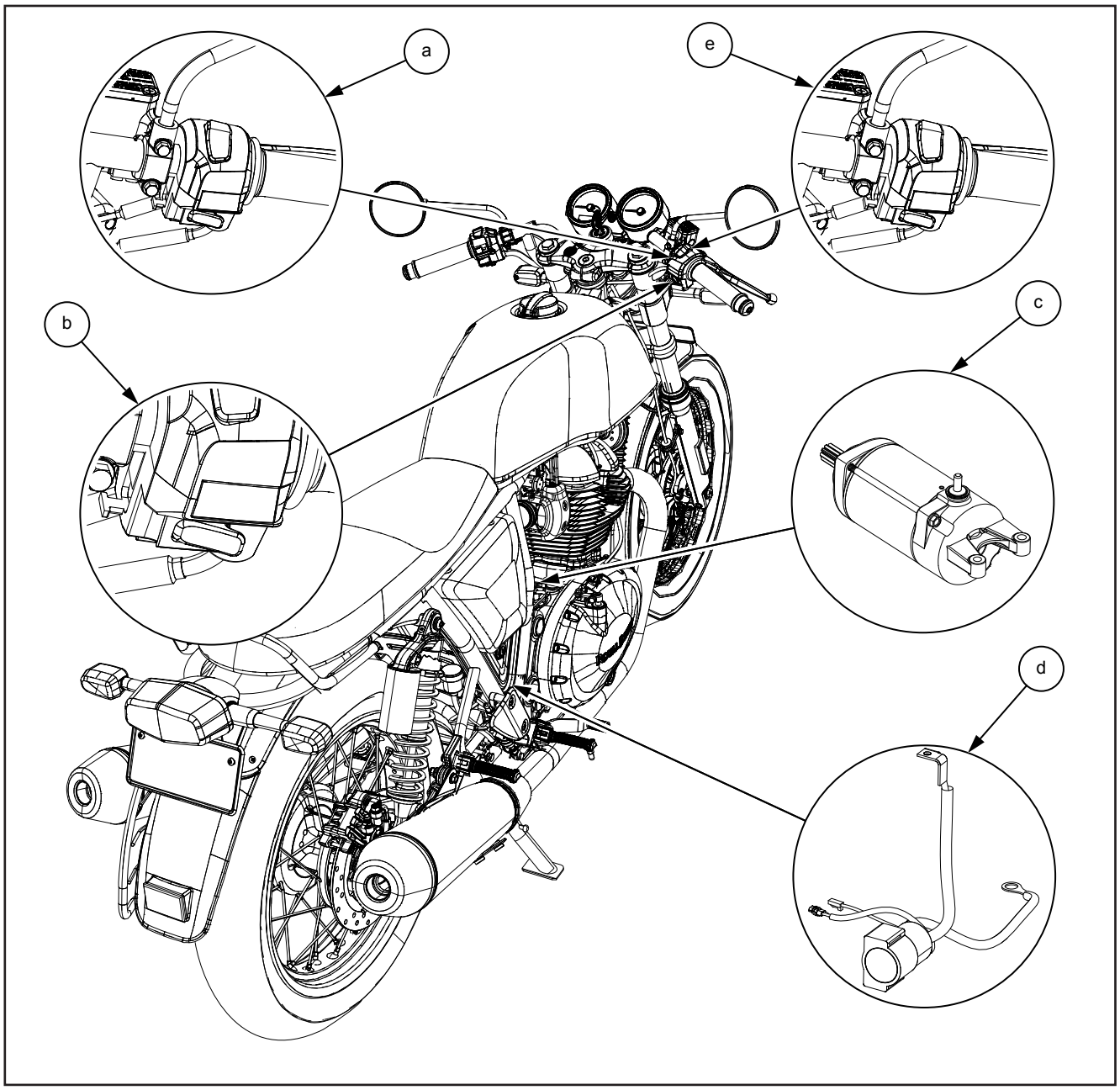

Item No.	Description	Quantity
a	Kill Switch (Stop Button)	1
b	Push Start Button	1
c	Starter Motor Assembly	1
d	Starter Solenoid Switch	1
e	Switch Module RH	1

Battery

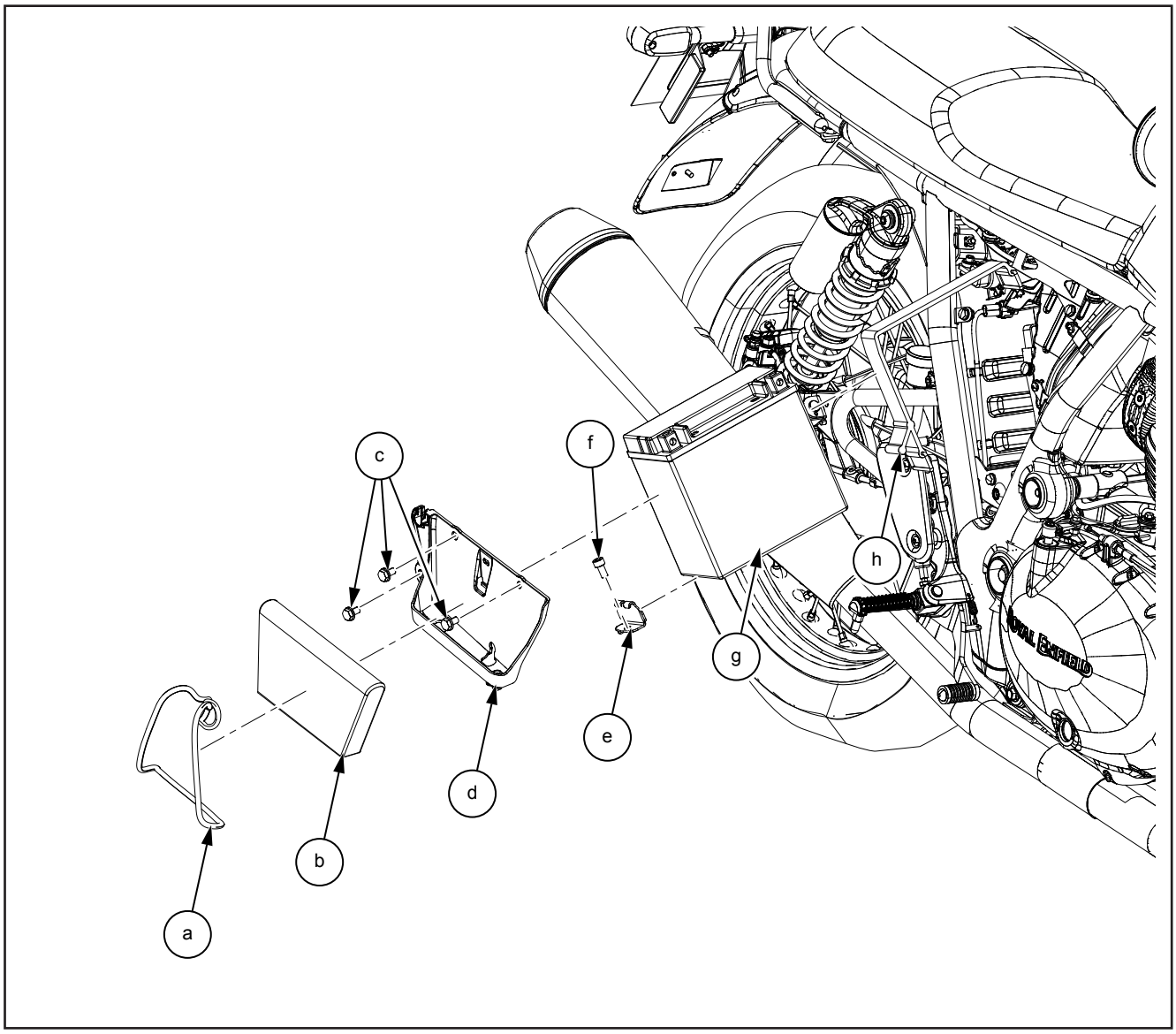

Item No.	Description	Quantity
a	O-Ring Tool Kit Tray	1
b	Tool Kit	1
c	Hex Flanged Bolt M6x1x10	3
d	Tool Kit Tray	1
e	Bracket, Battery Strap	1
f	Pan Head Screw M6x12, Counter	1
g	Battery	1
h	Battery Strap	1

11. Electrical System

11.1 Headlamp and Cluster Dismantling

11.1.1 Headlamp Reflector from Housing

NOTE
• *Ensure ignition switch and stop switch in off condition*

⚠ CAUTION
Support the Headlamp assembly carefully.

- Loosen and remove Phillips screw **(a)** on headlamp.

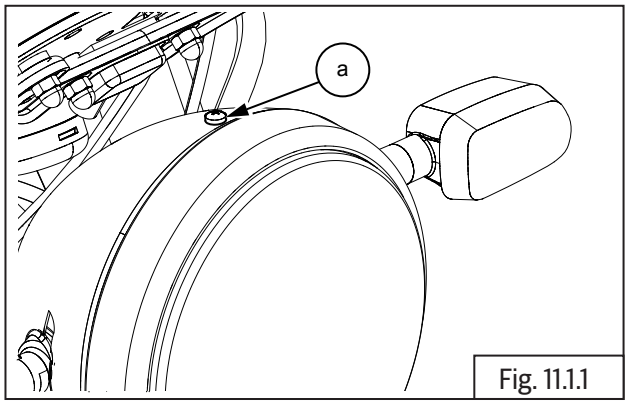

Fig. 11.1.1

	Phillips screw driver

- Gently remove front rim **(a)** along with reflector **(b)** from housing **(c)**.

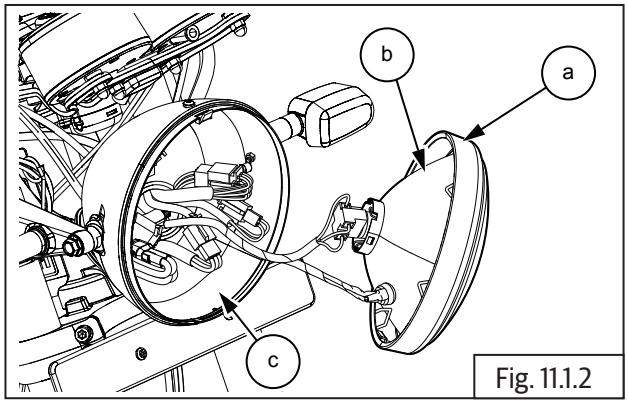

Fig. 11.1.2

⚠ WARNING
The headlamp and bulb can be extremely hot. Do not remove while headlamp/bulb are hot.

- Hold headlamp head carefully and disconnect headlamp connector **(a)** from headlamp bulb.

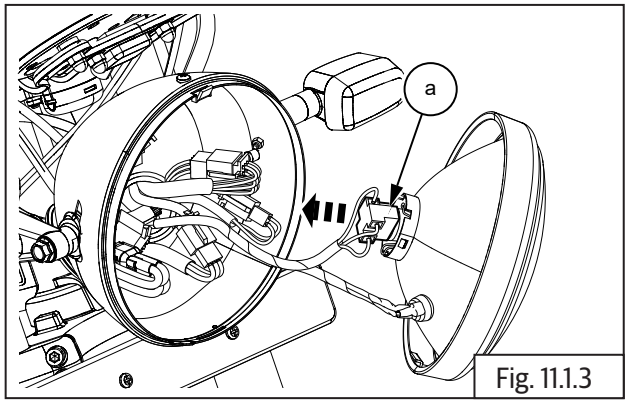

Fig. 11.1.3

11.1.2Pilot Bulb from Reflector

- Disconnect wires **(a)** from pilot bulb main **(b)** and ground **(c)** carefully.

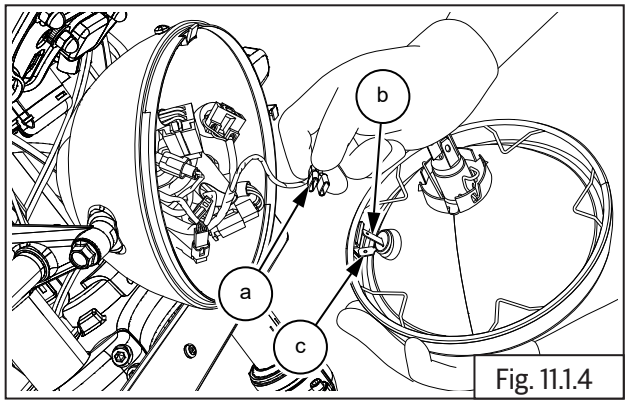

Fig. 11.1.4

- Gently pull out pilot bulb **(a)** along with bulb holder **(b)** from headlamp reflector.

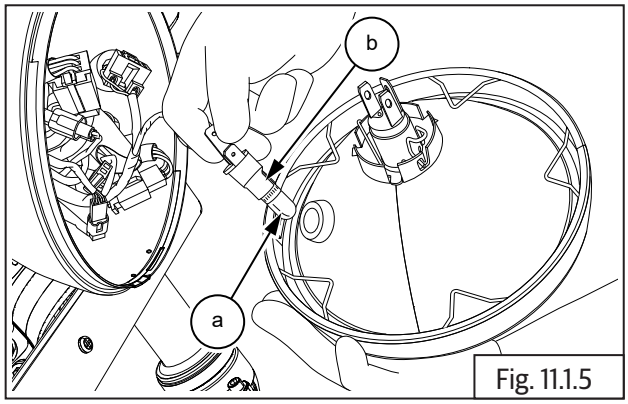

Fig. 11.1.5

⚠ CAUTION

Do not remove headlamp/bulb while they are hot.

- Gently depress bulb **(a)** to holder and turn counter-clockwise to remove bulb from holder **(b)**.

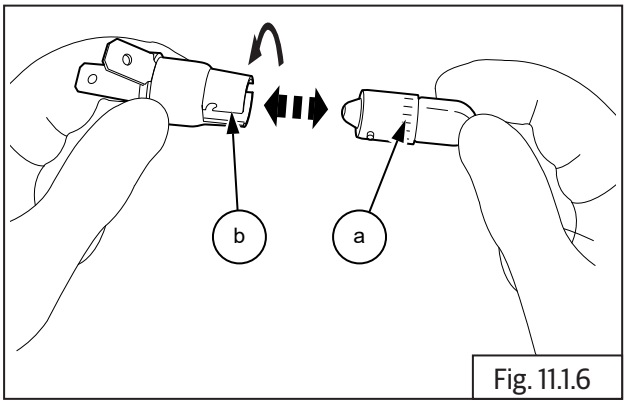

Fig. 11.1.6

11.1.3 Headlamp Bulb from Reflector

- Depress wire clip **(a)** and release from slot **(b)** in headlamp reflector.

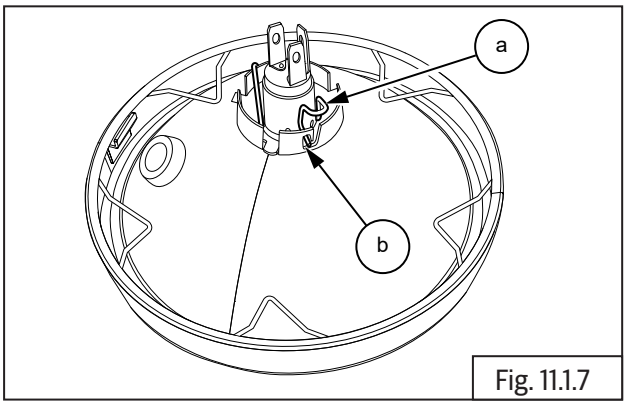

Fig. 11.1.7

- Remove wire clip **(a)** from reflector **(b)** and gently pull out headlamp bulb **(c)** from reflector.

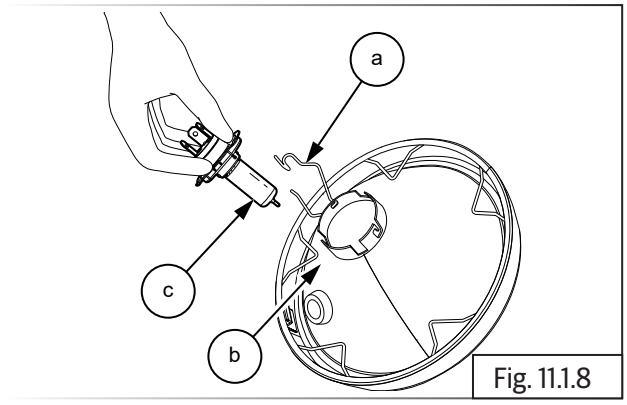

Fig. 11.1.8

⚠ CAUTION

Do not touch glass of bulb. Any strains or finger prints will affect the luminosity.

Ensure pointed tip of bulb does not get damaged

Whenever handling the bulb, hold it firmly at terminal end and not at glass end.

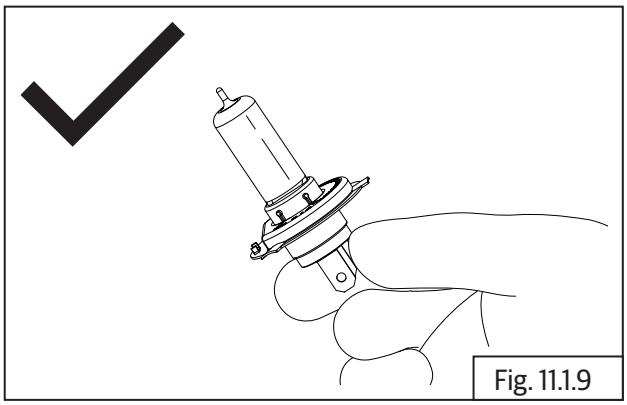
Fig. 11.1.9

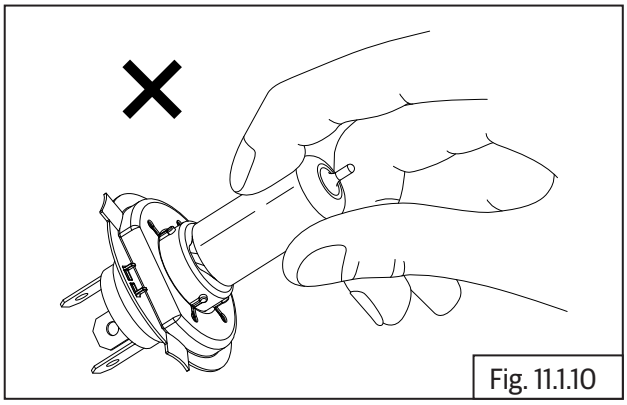
Fig. 11.1.10

11.1.4 Connectors and Sensors from Headlamp Housing

- Disconnect LH module connector **(a)** from headlamp housing.

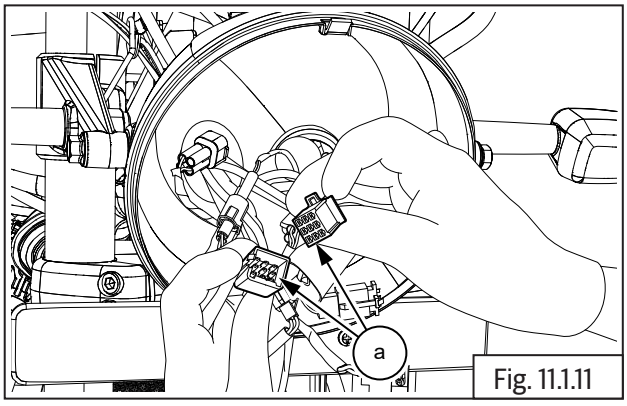

Fig. 11.1.11

- Disconnect clutch switch connector **(a)**.

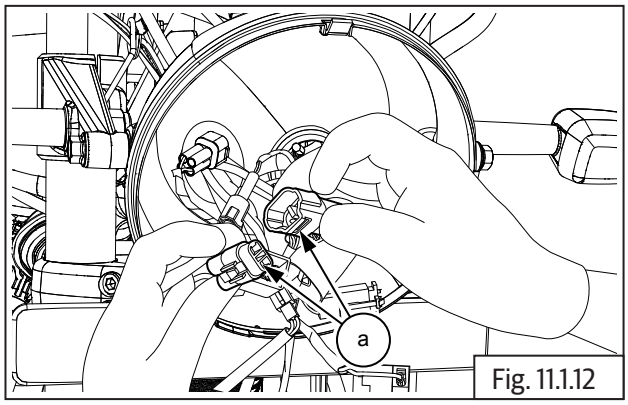

Fig. 11.1.12

- Disconnect front brake lamp switch connector **(a)**.

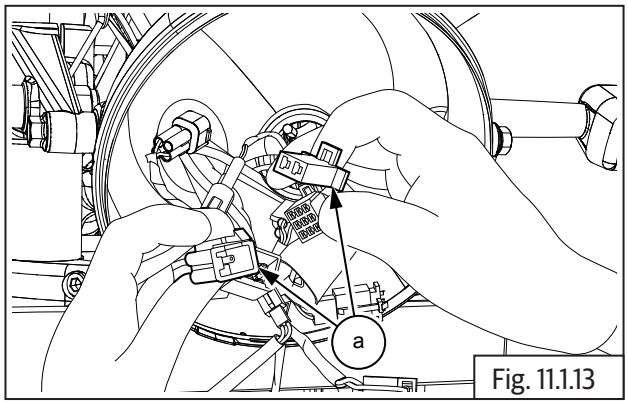

Fig. 11.1.13

- Disconnect RH module connector **(a)**.

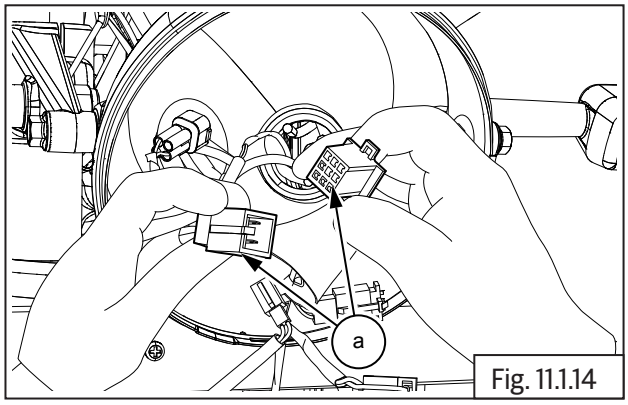

Fig. 11.1.14

- Disconnect wheel speed sensor connector **(a)**.

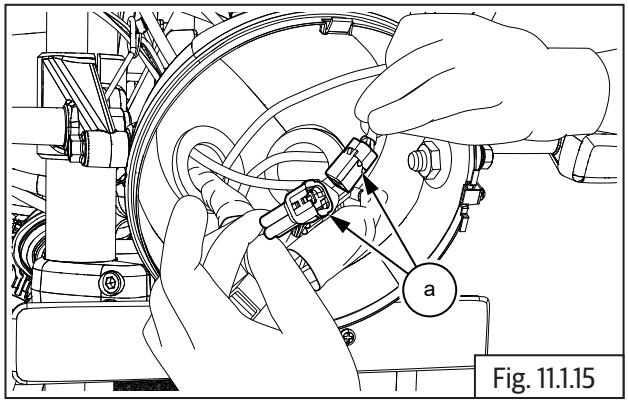

Fig. 11.1.15

- Press the lock to disconnect LH trafficator sensor connector **(a)**.

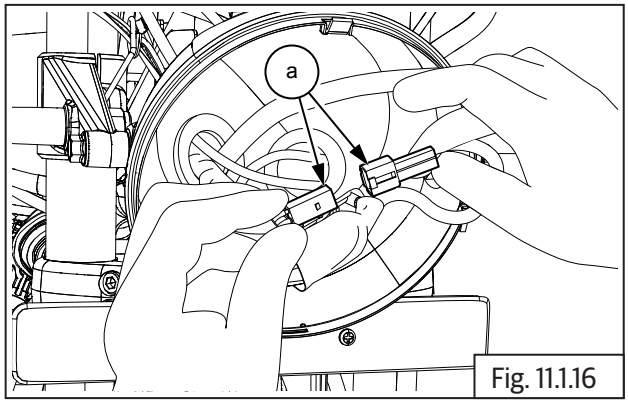

Fig. 11.1.16

	Phillips screw driver

- Disconnect RH trafficator sensor connector **(a)**.

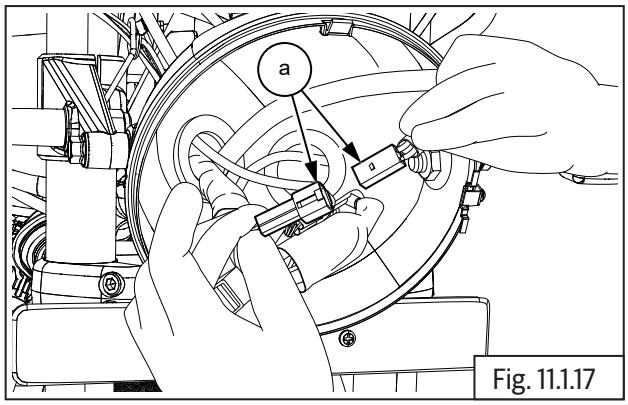

Fig. 11.1.17

- Disconnect ignition switch connector **(a)**.

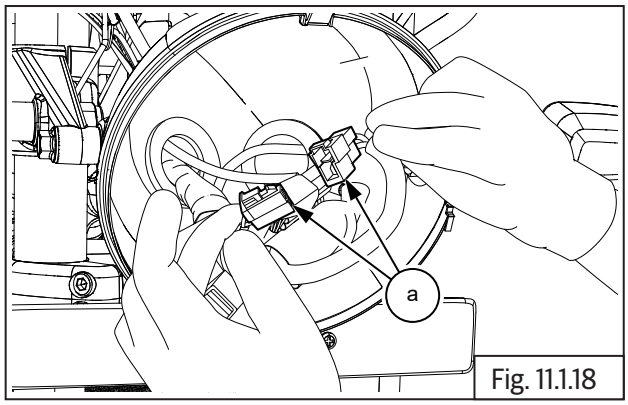

Fig. 11.1.18

- Disconnect cluster connectors **(a)** and **(b)**.

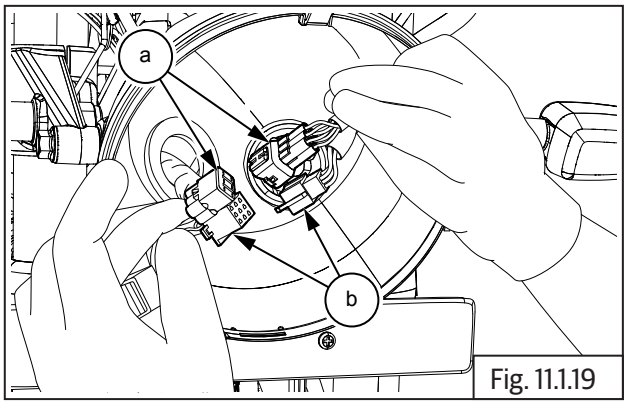

Fig. 11.1.19

11.1.5 Headlamp Housing from Holder LH & RH.

- Ensure all electrical connectors are removed.
- Support and loosen Hex flange holder bolts **(M8) (a)** RH and LH and remove headlamp housing.

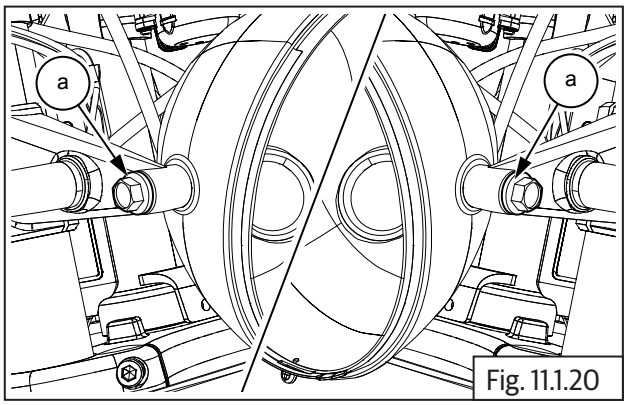

Fig. 11.1.20

	12 mm Socket with Ratchet

11.1.6 Direction Trafficators from Headlamp Holder

Dismantling

- Loosen and remove Hex nut **(M12) (a)** from LH direction trafficator.

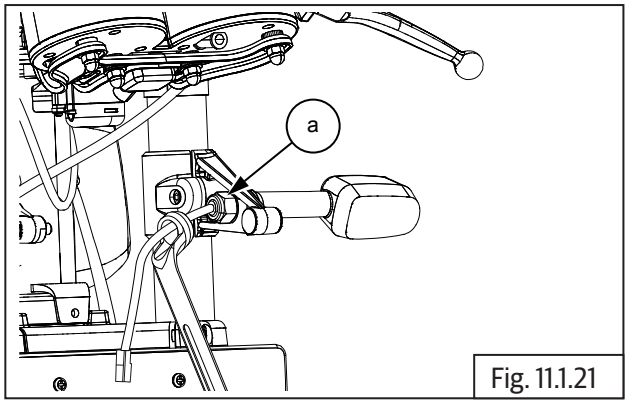

Fig. 11.1.21

	19 mm Ring spanner

- Remove LH direction trafficators **(a)** nut **(b) and** washer **(c)** from headlamp holder.

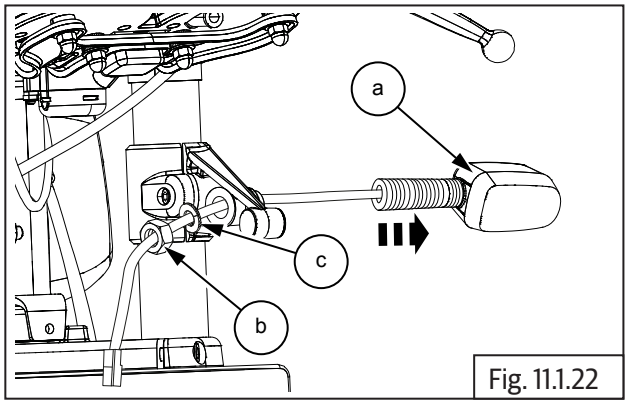

Fig. 11.1.22

- Similarly remove RH direction trafficator.

11.1.7 Cluster Assembly

- Remove 2 Nos. Hex socket head bolts **(M6) (a)** located below key set on LH and RH.

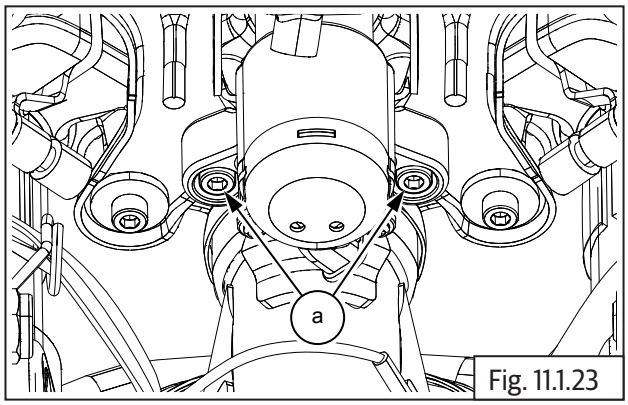

Fig. 11.1.23

	5 mm Allen socket with Ratchet

- Gently remove ignition key set **(a)**.

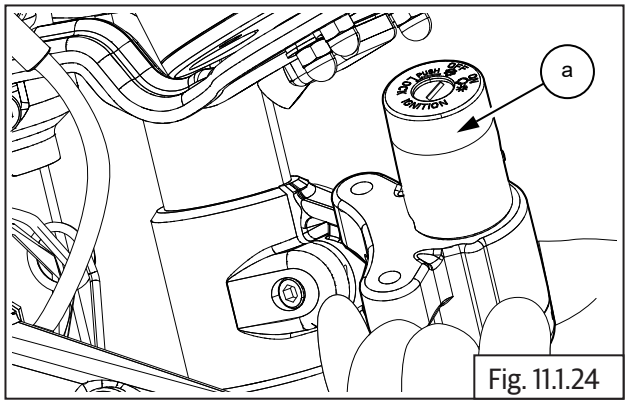

Fig. 11.1.24

- Remove 2 Nos. Hex socket head bolts **(M6) (a)** located below cluster bracket on LH and RH.

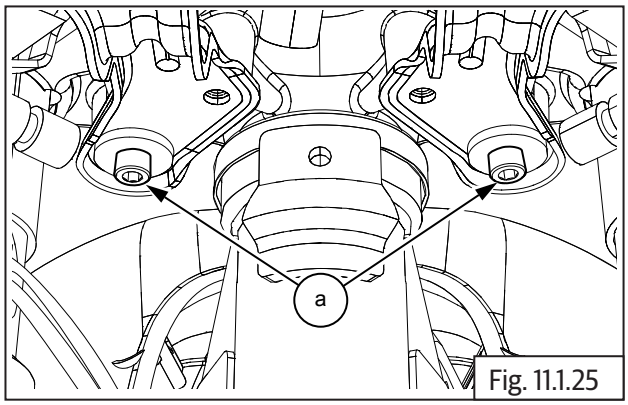

Fig. 11.1.25

	5 mm Allen socket with Ratchet

- Detach cluster bracket **(a)** from motorcycle and keep it aside safely.

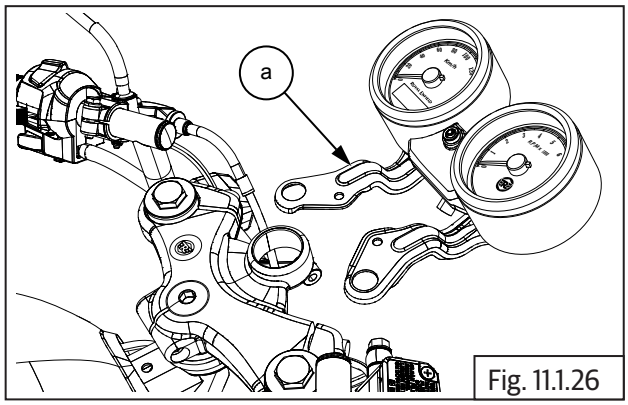

Fig. 11.1.26

11.1.8 Headlamp Housing Holders from Fork Legs

- Loosen and remove Hex socket head bolt **(M8) (a)** from top yoke RH.

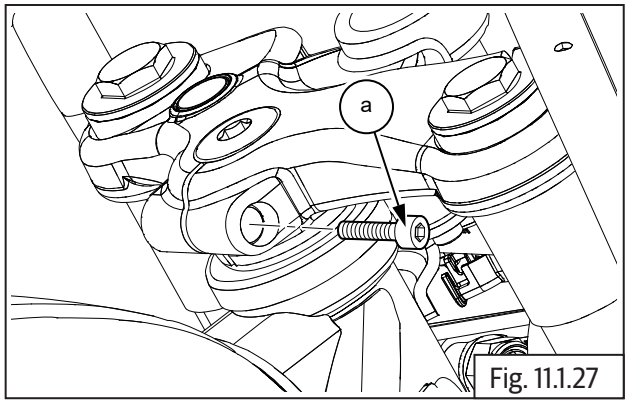

Fig. 11.1.27

	6 mm Allen socket with Ratchet

- Gently pull out upper yoke **(a)** from steering stem .

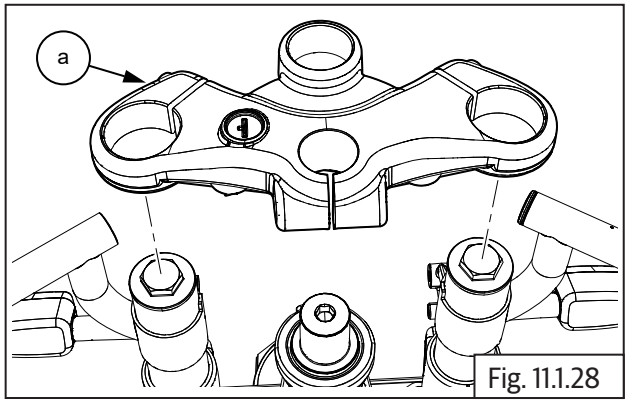

Fig. 11.1.28

- Remove handlebar clip-on LH and RH (section 6.3.3).
- Pull out headlamp housing holders **(a)** LH & RH from front fork legs LH & RH **(b)**.

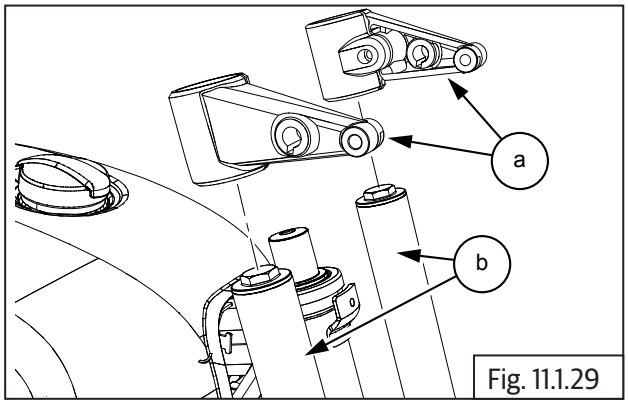

Fig. 11.1.29

11.2 Tail Lamp Dismantling

11.2.1 Tail Lamp

NOTE
• *Handle tail lamp assembly with care. Avoid over tightening of lens screws.*

- Loosen and remove 2 Nos. screws **(a)** from tail lamp lens **(b)**.

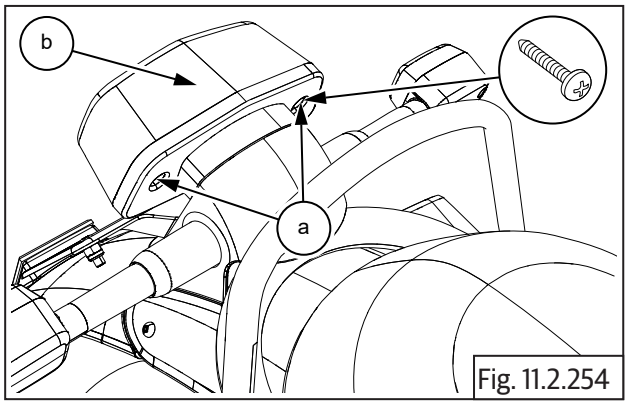

Fig. 11.2.254

	Screw driver (+)

- Gently remove lens **(a)** from tail lamp assembly **(b)**.

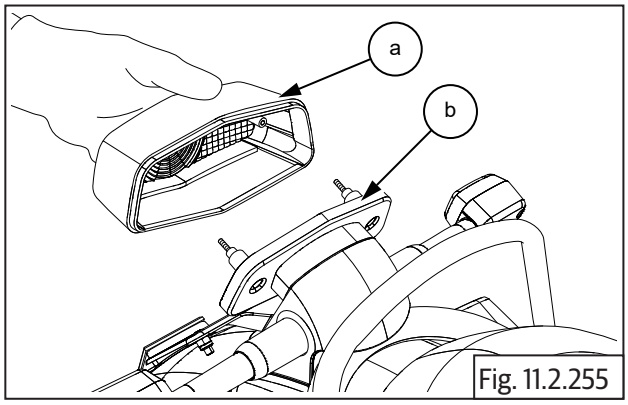

Fig. 11.2.255

- Gently push bulb **(a)** and turn in anti-clockwise direction to remove bulb from holder **(b)**.

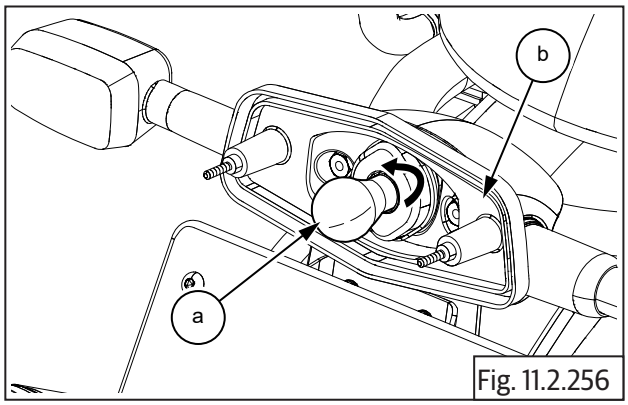

Fig. 11.2.256

11.3 Brake Lamp Connectors Dismantling

11.3.1 Brake Lamp Connector - Rear

- Remove RH side panel (section 6.7.1).
- Disconnect rear brake lamp connector **(a)** located near rear mudguard infill.

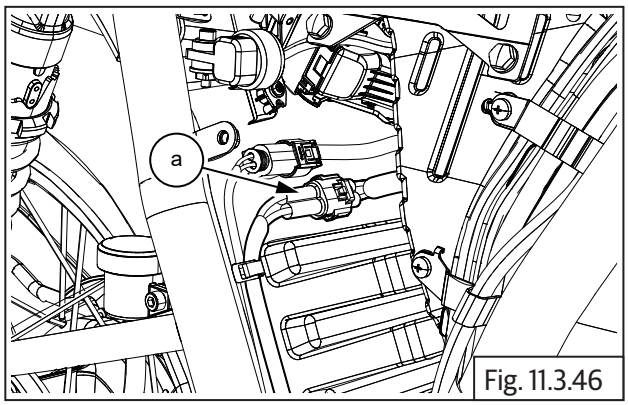

Fig. 11.3.46

11.3.2 Brake Lamp Connector - Front

- Remove the following parts:
  - Headlamp assembly (section 11.1.1).
  - Front brake lamp switch (section 11.1.4).
- Disconnect front brake lamp connector **(a)**.

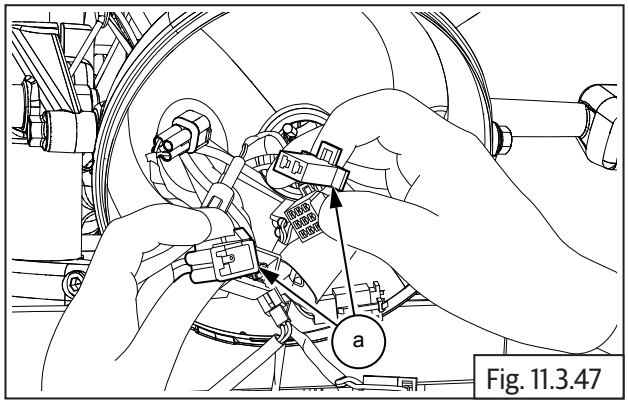

Fig. 11.3.47

11.4 Trafficators Dismantling

11.4.1 Direction Trafficators - Rear

- Remove rear number plate bracket (section 6.6.4).
- Support and remove tail lamp housing **(a)** from the frame **(b)**.

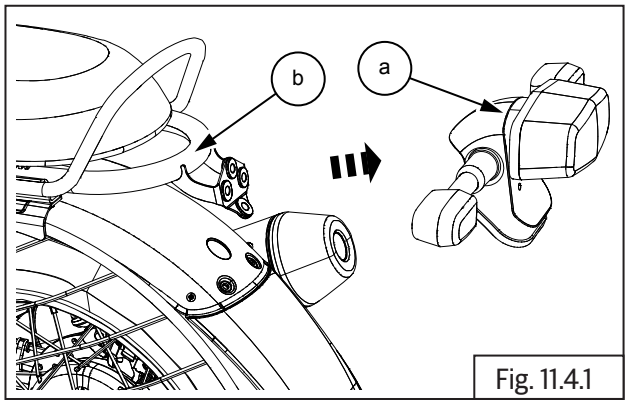

Fig. 11.4.1

- Loosen and remove hex nut **(M12) (a)** along with washer **(b)** to remove rear trafficator **(c)**.

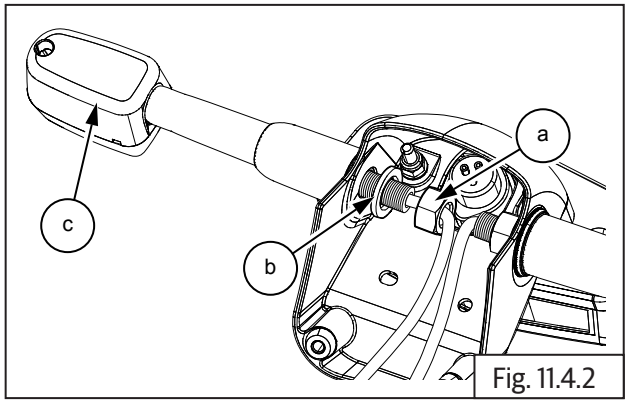

Fig. 11.4.2

	19 mm Ring spanner

11.4.2 Trafficator bulb - Front

- Loosen and remove screw along with washer **(a)** from front trafficator lens RH.

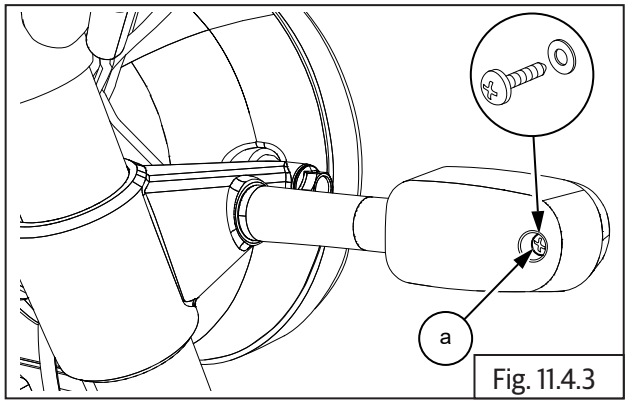

Fig. 11.4.3

	Screw driver

- Remove lens **(a)** along with bulb assembly.

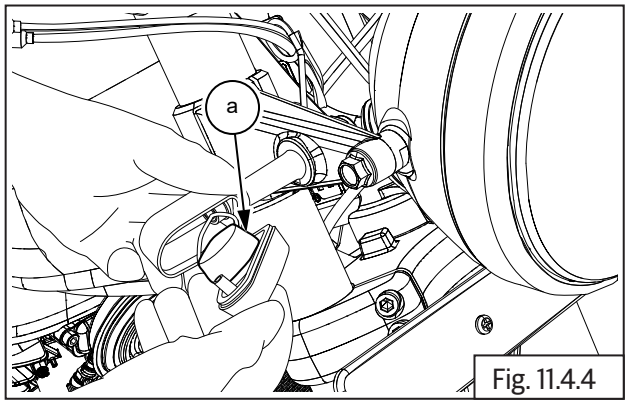

Fig. 11.4.4

- Remove grommet **(a)** from lens assembly **(b)**.

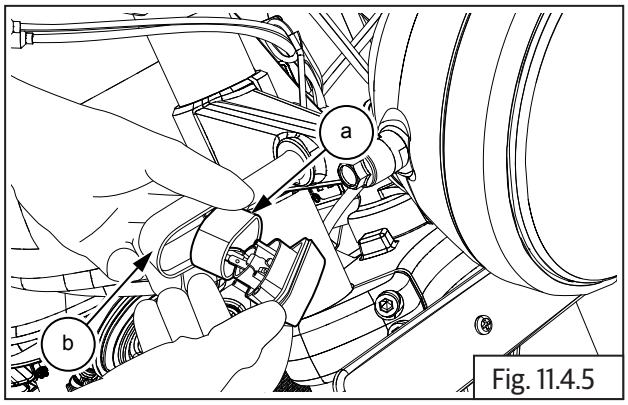

Fig. 11.4.5

- Disconnect ground connection **(a)** from holder assembly pin.

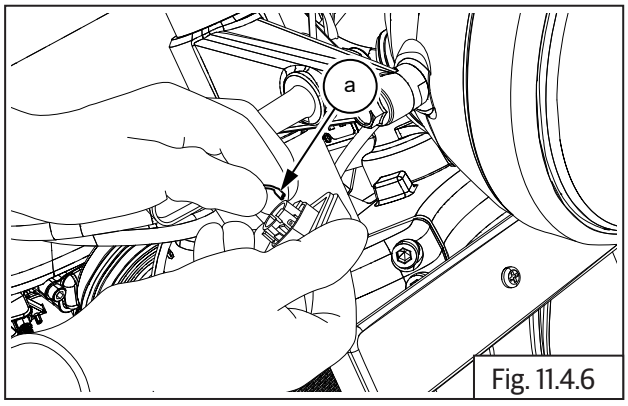

Fig. 11.4.6

- Disconnect positive (+) connection **(a)** from trafficator holder pin **(b)**.

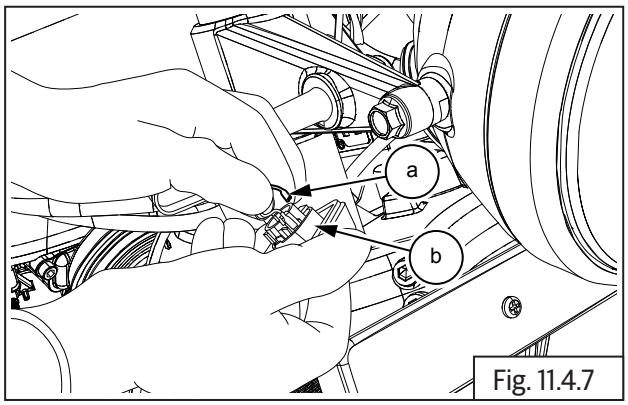

Fig. 11.4.7

- Press and release both locks **(a)** from holder assembly **(b)**.

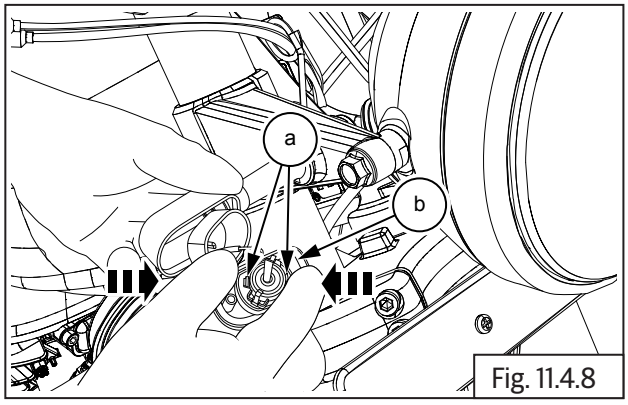

Fig. 11.4.8

- Remove holder **(a)** along with bulb from lens **(b)**.

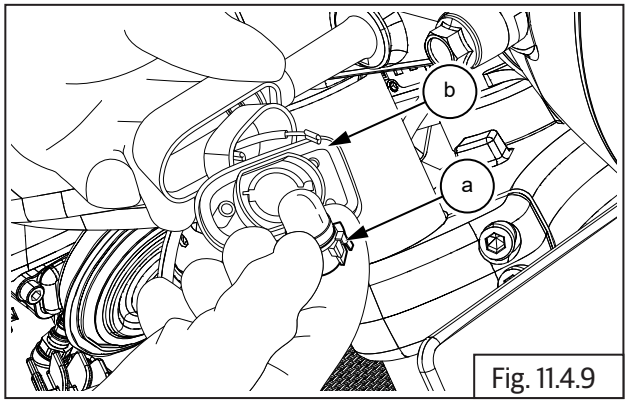

Fig. 11.4.9

- Remove bulb **(a)** from holder **(b)**.

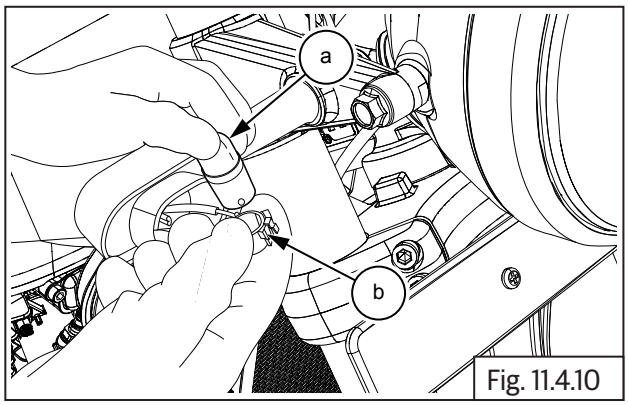

Fig. 11.4.10

- To remove the trafficator assembly from headlamp assembly refer (section 11.1.6).

11.5 Battery Dismantling

11.5.1 Battery Terminals

- Remove the following parts:
  - Side panel RH (section 6.7.1).
  - Rider seat (section 6.7.2).
  - Side panel LH (section 6.7.4).
- Ensure Ignition and stop switch are in OFF position before disconnecting battery cables.
- Refer general information (section 1.5.8) for battery connection and disconnection procedure.

NOTE
• *If battery lead is difficult to disconnect due to rust or corrosion of battery terminals, pour recommended battery terminal cleaning solution on terminals and then try to disconnect.*

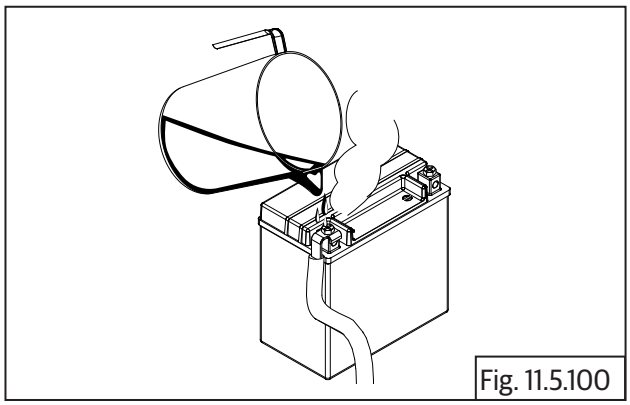

Fig. 11.5.100

- Disconnect battery negative (-) terminal bolt **(a)**.

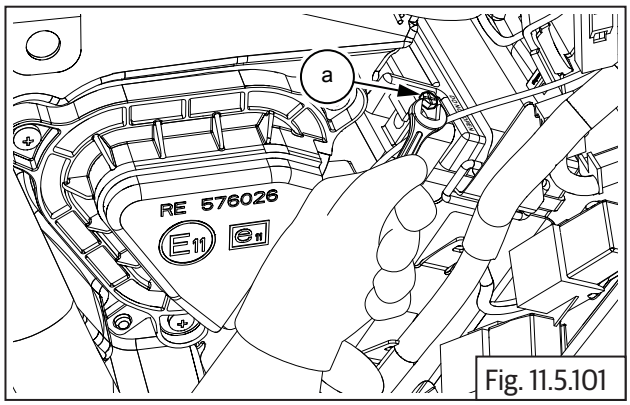

Fig. 11.5.101

	10 mm Double end spanner

Utility Box

- Remove the following parts:
  - Side panel RH (section 6.7.1).
- Loosen and remove 3 Nos. Hex head bolts **(M6) (a)** from tool holder **(b)**.

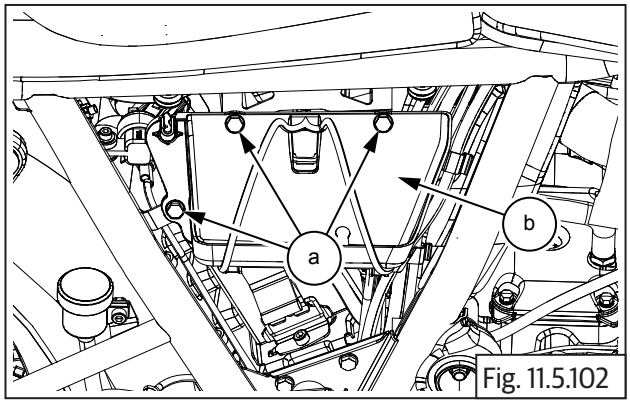

Fig. 11.5.102

	10 mm Socket and Ratchet

- Disconnect battery positive (+) terminal **(a)** from battery **(b)**.

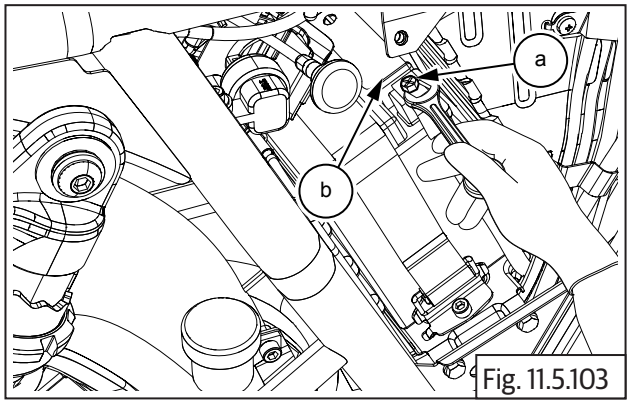

Fig. 11.5.103

	10 mm Double end spanner

- Pull battery strap (belt) **(a)** downwards and release strap lock **(b)** from battery strap bracket **(c)**.

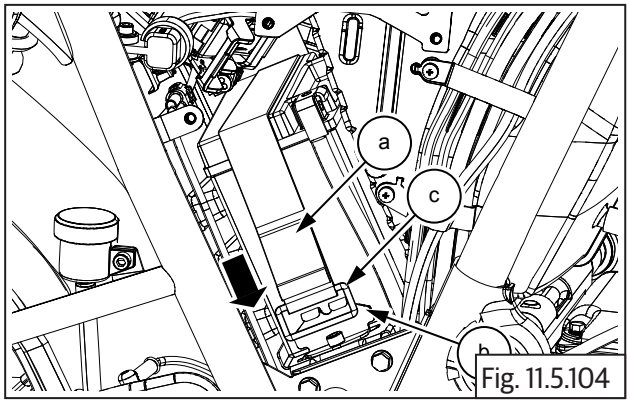

Fig. 11.5.104

- Loosen and remove Hex flanged head screw **(M6) (a)** from battery strap bracket **(b)**.

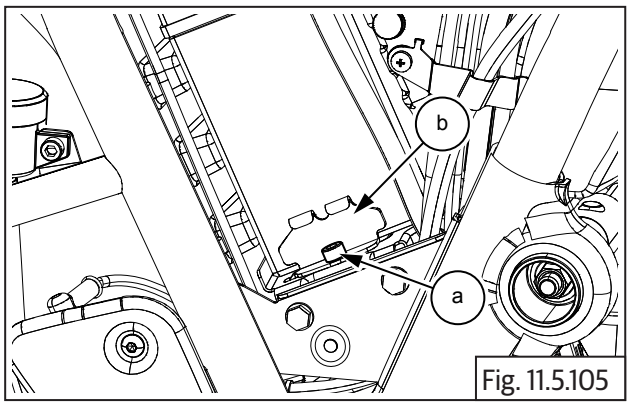

Fig. 11.5.105

	5 mm Allen key with Ratchet

- Remove the battery strap bracket **(a)** from battery tray **(b)**.

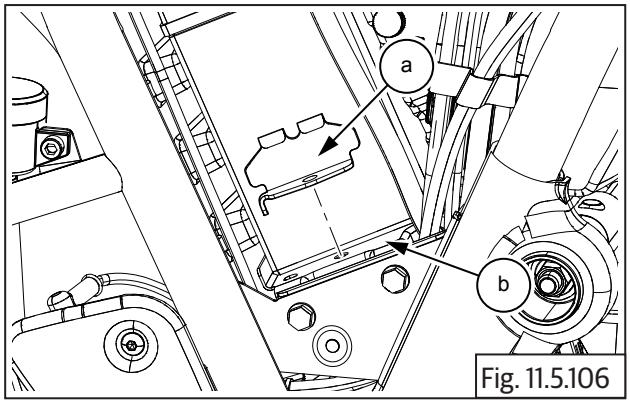

Fig. 11.5.106

- Remove battery **(a)** from tray **(b)**.

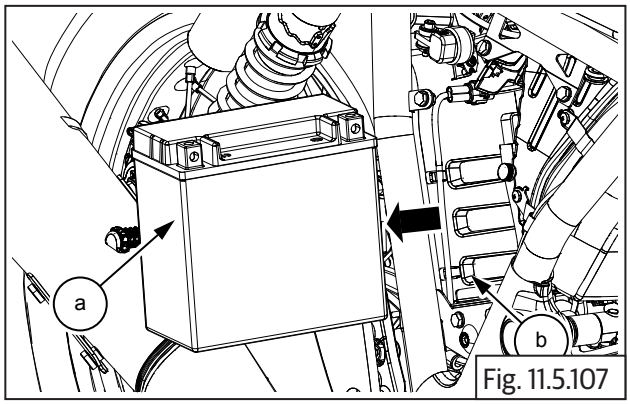

Fig. 11.5.107

11.5.2 Battery Tray

- Remove the following parts:
  - Rear wheel (section 6.8.3).
  - Engine control unit (ECU) (section 10.1.1).
  - Rear mudguard infill cover (section 6.6.7).
  - Starter solenoid from battery tray (section 11.5.3).
- Loosen and remove the 2 Nos. Hex head collar bolt **(M6) (a)** from frame RH.

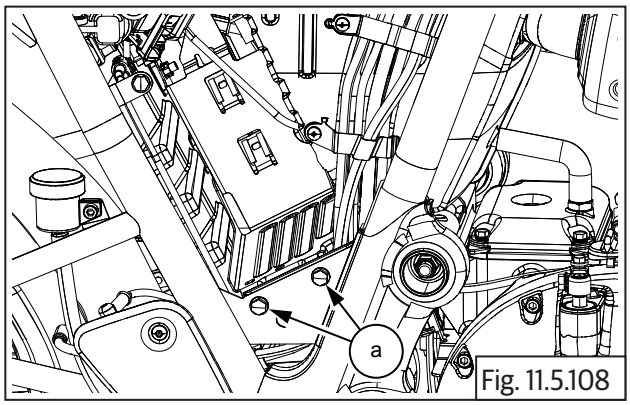

Fig. 11.5.108

	10 mm Socket and Ratchet

- Loosen and remove the Hex head collar bolt **(M6) (a)** from frame LH.

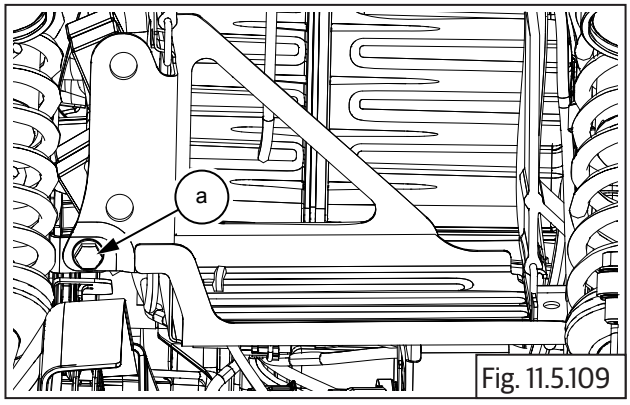

Fig. 11.5.109

	10 mm Socket and Ratchet

- Ensure wiring harness routing is separated from battery bracket and remove battery tray **(a)** from frame.

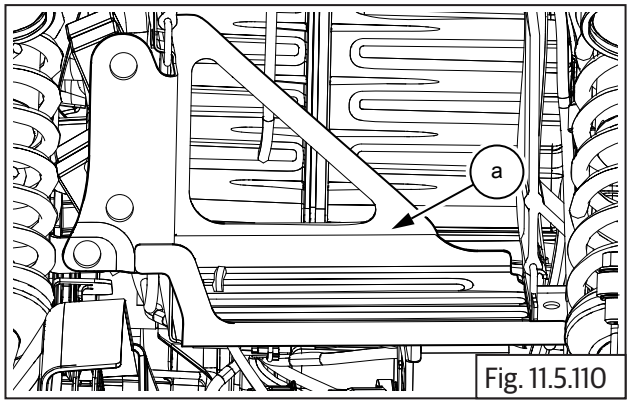

Fig. 11.5.110

11.5.3 Starter Solenoid

- Remove the following parts:
  - Remove rear wheel (section 6.8.3).
  - Remove rear mudguard in fill cover (section 6.6.7).
  - Remove battery positive (+) terminal (section 11.5.1).
- Disconnect starter solenoid connectors **(a)**. Solenoid connectors are located below battery tray.

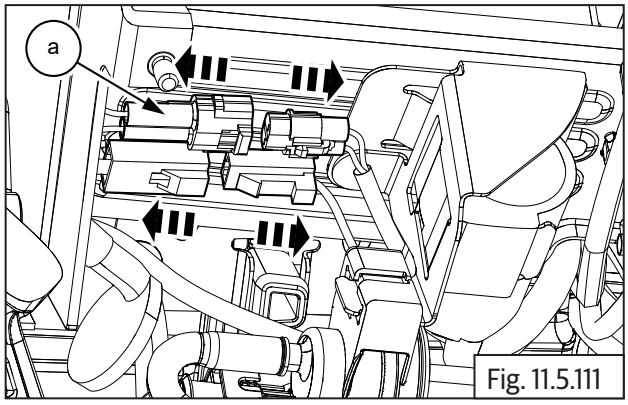

Fig. 11.5.111

- Gently slide out solenoid coil **(a)** from battery bracket **(b)** along with battery positive (+)cable.

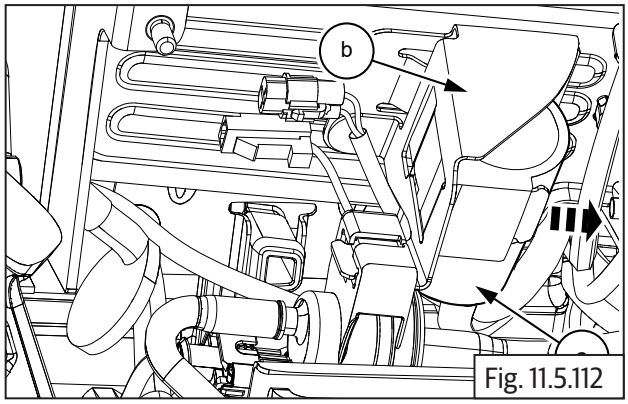

Fig. 11.5.112

11.5.4 RR Unit

⚠ CAUTION

Ensure motorcycle is placed on a flat surface, resting it on center stand/ramp.

Support motorcycle with suitable equipment below cradle frame. If necessary.

- Remove charcoal canister (section 8.1.1).
- Locate RR unit **(a)** behind engine guide near center stand bracket **(b)**.

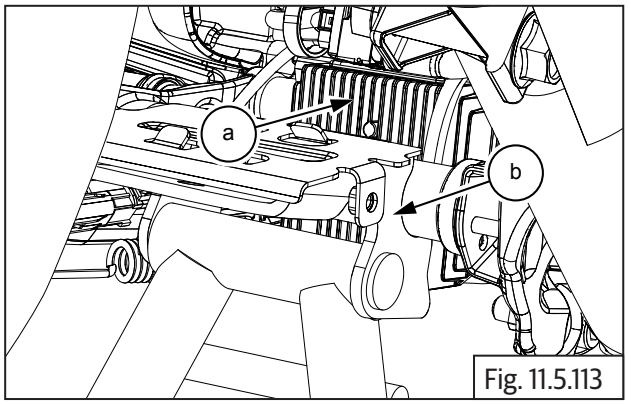

Fig. 11.5.113

- Disconnect RR unit connectors **(a)** and connectors **(b)** from wiring harness.

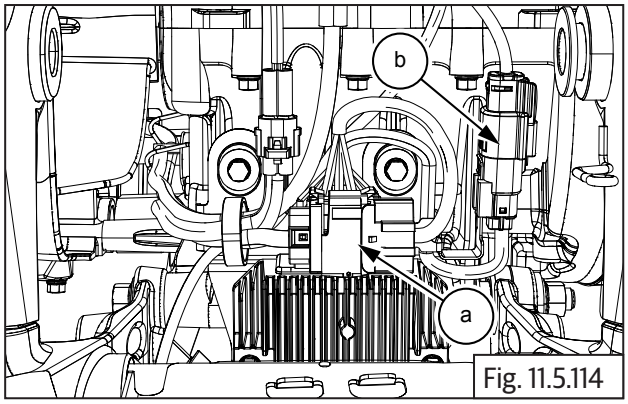

Fig. 11.5.114

- Loosen and remove 2 Nos. Hex flanged bolts **(M6) (a)** along with washer to remove RR unit.

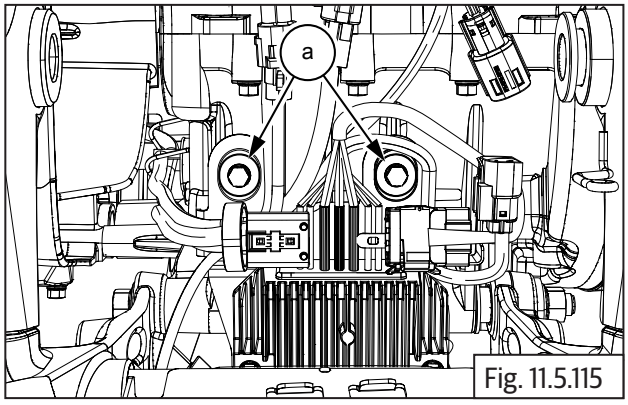

Fig. 11.5.115

	10 mm Socket with Ratchet

- Gently slide down RR unit **(a)** from engine guide rear and remove it along with bracket.

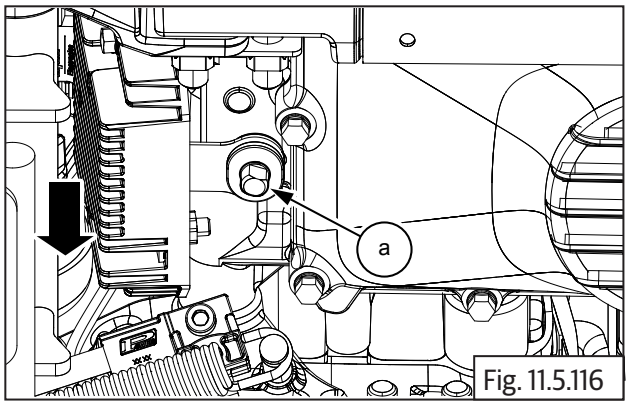

Fig. 11.5.116

11.6 Horn Dismantling

- Disconnect the RH horn connectors **(a).**

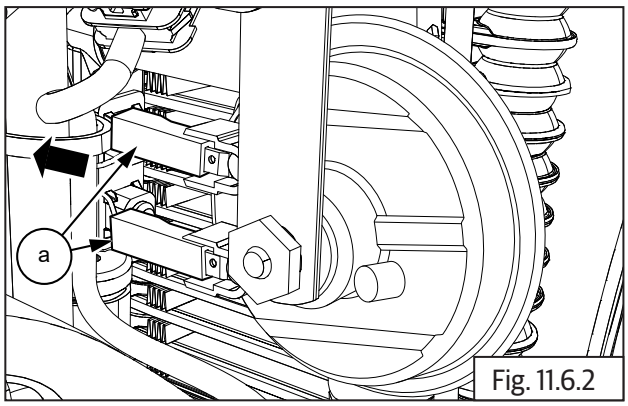

Fig. 11.6.2

- Disconnect the LH horn connectors **(a)**.

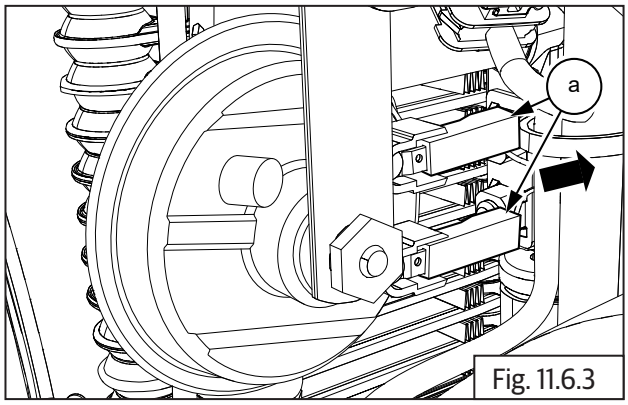

Fig. 11.6.3

- Loosen and remove Hex flange bolt and nut **(M8) (a)** to remove RH horn bracket.

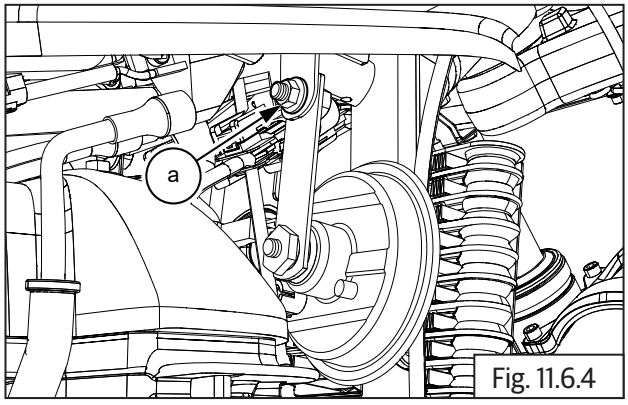

Fig. 11.6.4

	12 mm Socket with Ratchet 12 mm Ring spanner

- Loosen and remove Hex flange bolt and nut **(M8) (a)** to remove LH horn bracket.

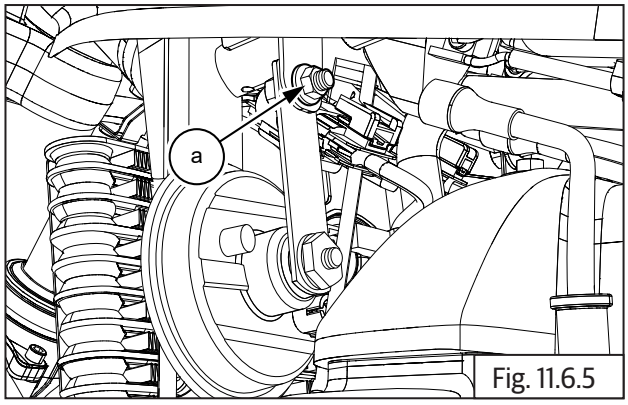

Fig. 11.6.5

	12 mm Socket with Ratchet 12 mm Ring spanner

Inspection

- Inspect connector pins for any bends, corrosions and damages.
- Inspect headlamp holder for any scratches, rust, cracks and damages. Replace if it is defective.
- Inspect and replace reflector if it has any damages and/or distraction.
- Inspect if wire clips are loosened and tighten appropriately.
- Inspect if headlamp holder bolt is loosened and tighten appropriately.
- Inspect the bulb filament for any damages and replace.

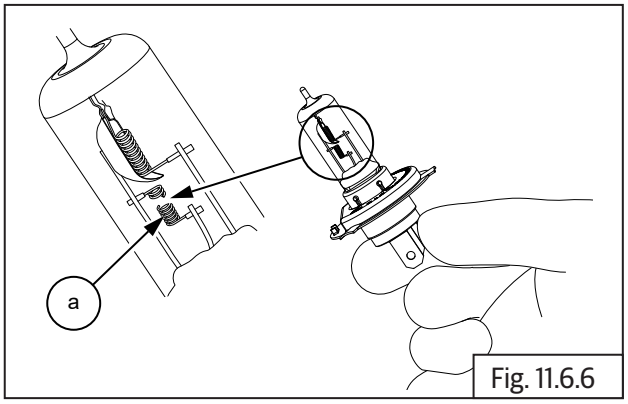

Fig. 11.6.6

Battery

- Check battery for any damages.
- Check the battery terminals for sulfating, corrosion or damages.
- Test voltage level. It should be 12.8V to 13.2V approximately.

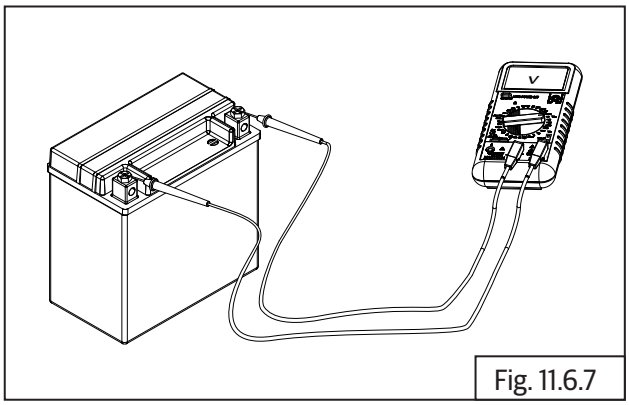
Fig. 11.6.7

Assembly

11.7 Horn Assembly

- Locate and tighten Hex flange bolt and nut **(M8) (a)** into RH horn bracket.

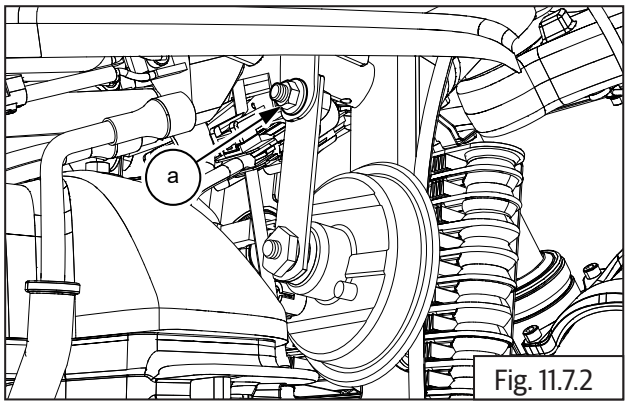

Fig. 11.7.2

	12 mm Socket with Ratchet 12 mm Ring spanner
Torque	25 N-m/2.5 kgf-m

- Locate and tighten Hex flange bolt and nut **(M8) (a)** into LH horn bracket.

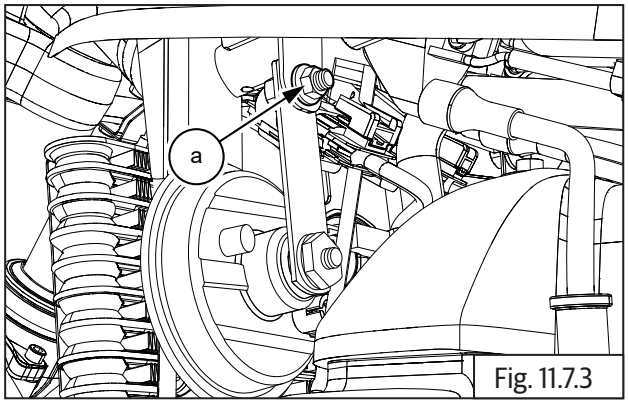

Fig. 11.7.3

	12 mm Socket with Ratchet 12 mm Ring spanner
Torque	25 N-m/2.5 kgf-m

- Connect the LH horn connectors **(a)**.

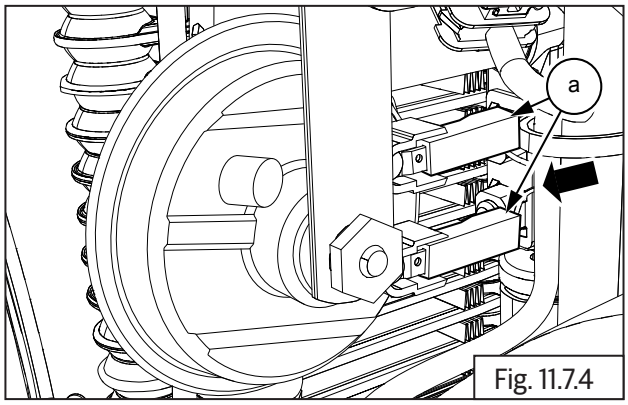

Fig. 11.7.4

- Connect the RH horn connectors **(a)**.

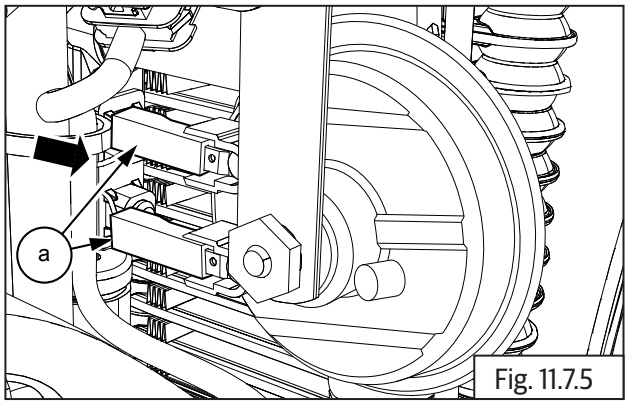

Fig. 11.7.5

11.8 Battery Assembly

11.8.1 RR Unit

- Locate RR unit **(a)** into engine guide rear along with bracket and gently slide up to fix RR unit.

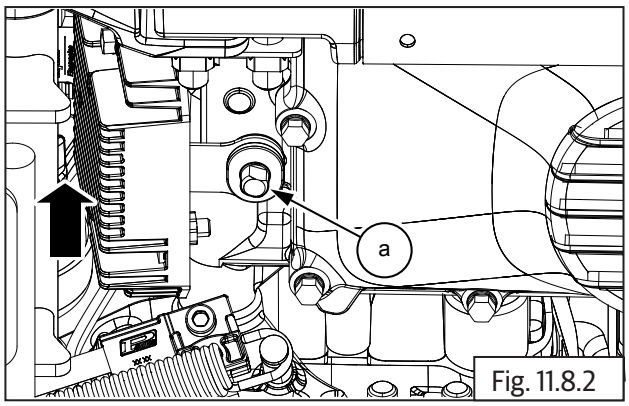

Fig. 11.8.2

- Insert and tighten 2 Nos. Hex flanged bolts **(M6) (a)** along with washer to fix RR unit.

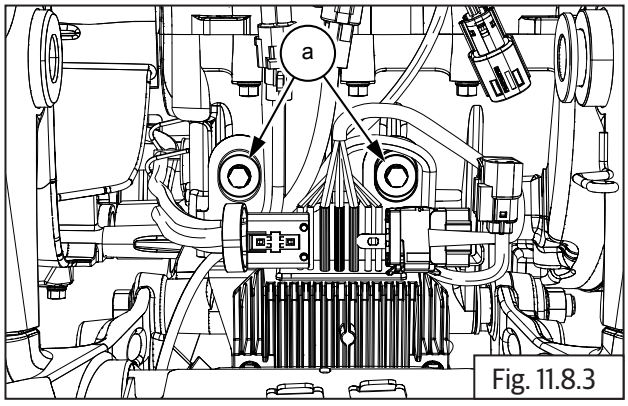

Fig. 11.8.3

	8 mm Socket with Ratchet
Torque	10 N-m/1.0 kgf-m

- Connect RR unit connectors **(a)** and **(b)** into wiring harness and ensure they are locked properly.

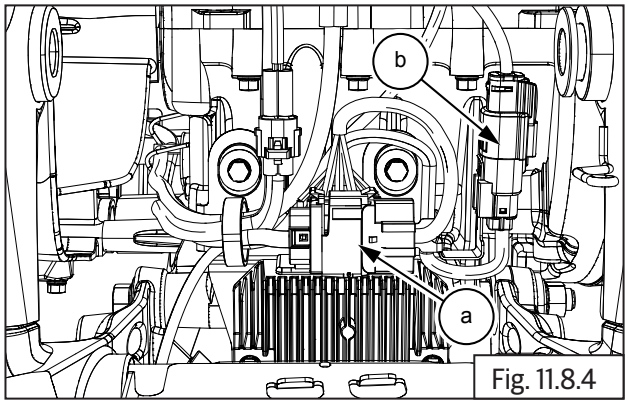

Fig. 11.8.4

11.8.2 Starter Solenoid

- Gently slide and locate solenoid coil **(a)** into battery bracket **(b)**.

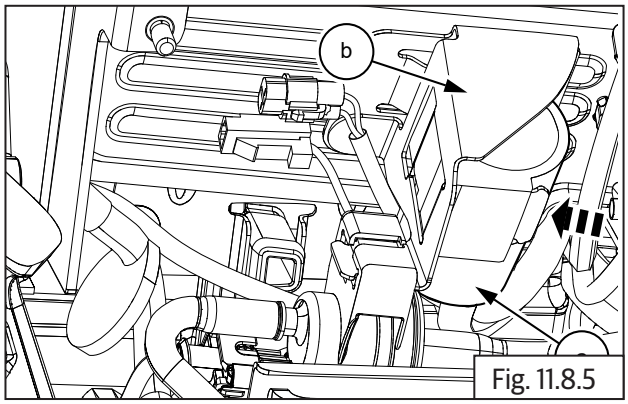

Fig. 11.8.5

- Connect starter solenoid connectors **(a)** into wiring harness.

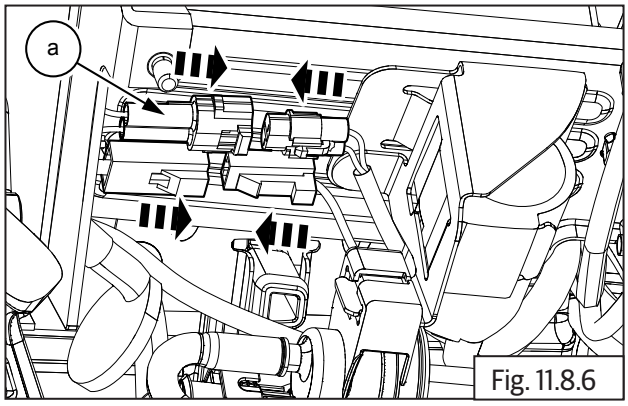

Fig. 11.8.6

11.8.3 Battery Tray

- Locate battery tray **(a)** into frame and ensure wiring harness routing is accurately connected into battery bracket.

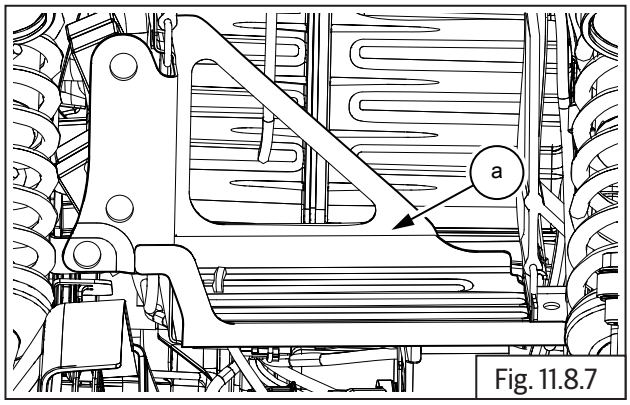

Fig. 11.8.7

- Locate and tighten Hex head collar bolt **(M6) (a)** into frame LH.

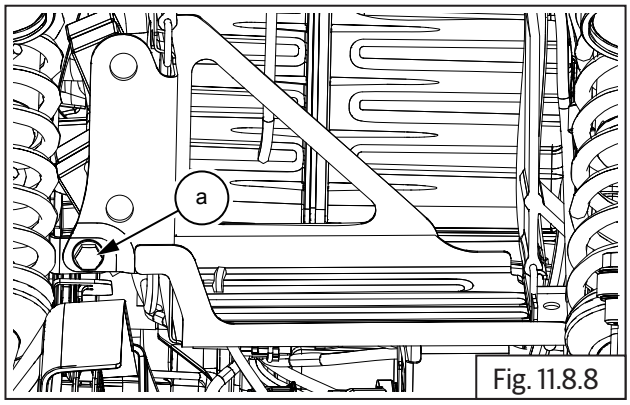

Fig. 11.8.8

	10 mm Socket with Ratchet
Torque	10 N-m/1.01 kgf-m

- Locate and tighten 2 Nos. Hex head collar bolt **(M6) (a)** from frame RH.

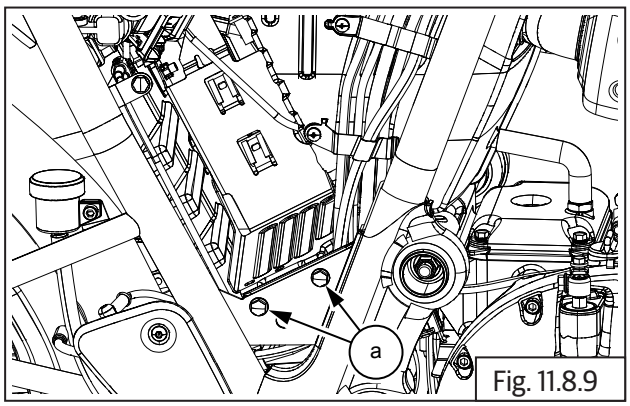

Fig. 11.8.9

	6 mm Socket with Ratchet
Torque	10 N-m/1.01 kgf-m

- Install battery **(a)** into tray **(b)**.

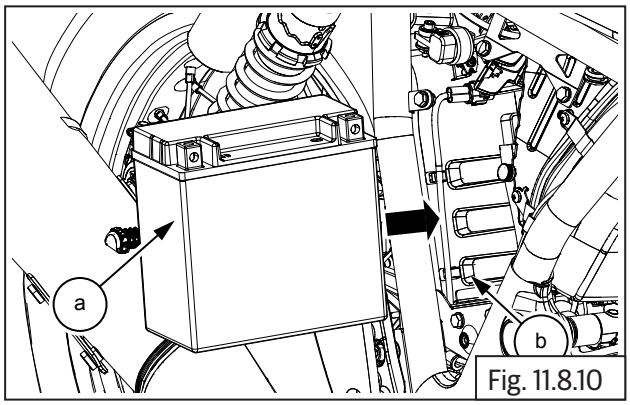

Fig. 11.8.10

- Place battery strap bracket **(a)** onto battery tray **(b)**.

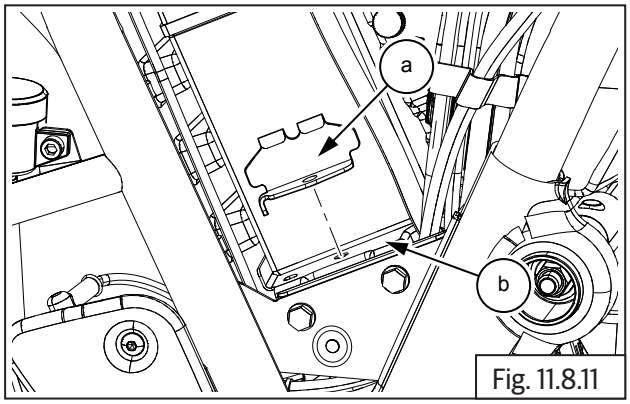

Fig. 11.8.11

- Locate and tighten flanged head screw **(M6) (a)** onto battery strap bracket **(b)**.

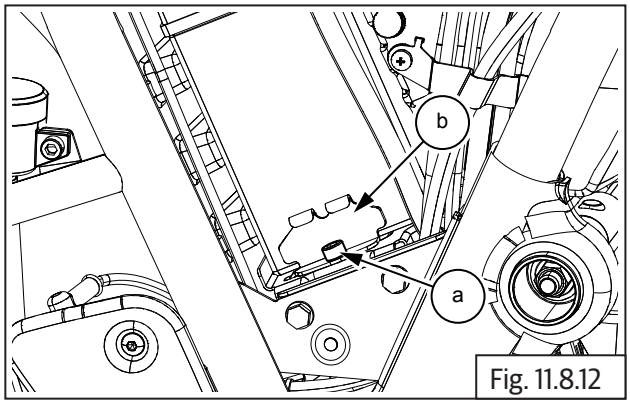

Fig. 11.8.12

	5 mm Allen key with Ratchet
Torque	10 N-m/1.01 kgf-m

- Pull battery strap (belt) **(a)** downwards to fix strap lock **(b)** into battery strap bracket **(c)**.

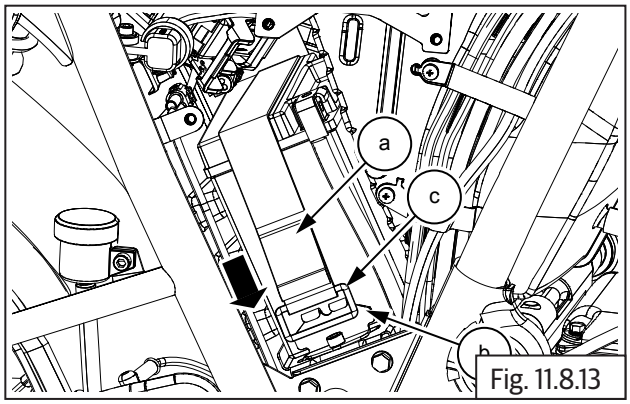

Fig. 11.8.13

11.8.4 Battery Terminals

- Connect battery positive (+) terminal **(a)** and tighten Hex head bolt **(M6) (b)**.

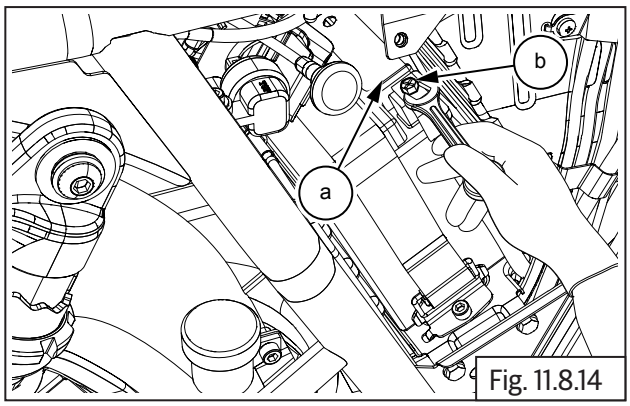

Fig. 11.8.14

	10 mm Double end spanner

Utility Box

- Locate and tighten 3 Nos. Hex head bolts **(M6) (a)** onto tool holder **(b)**.

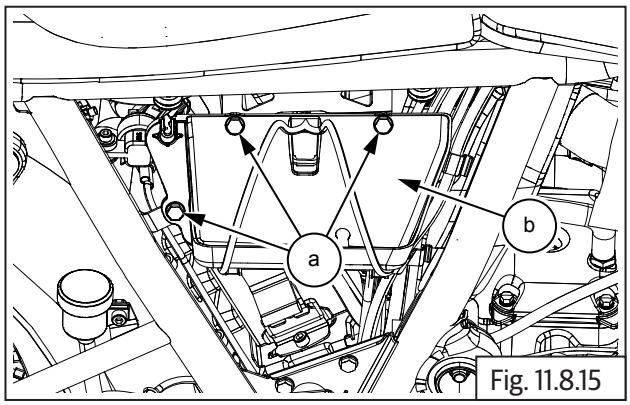

Fig. 11.8.15

	10 mm Double end spanner
Torque	3 N-m/0.3 kgf-m

- Connect battery negative (-) terminal **(a)** and tighten Hex head bolt **(M6) (b)**.

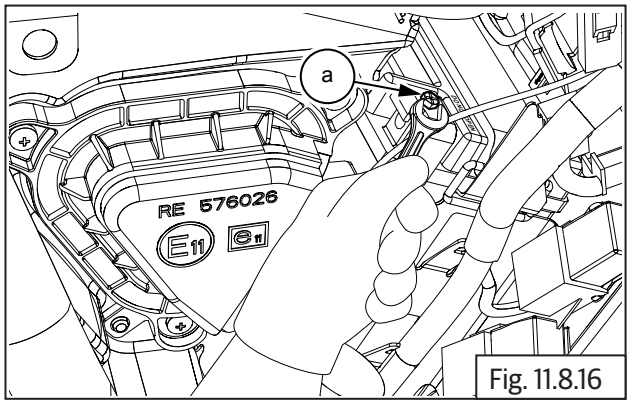

Fig. 11.8.16

	10 mm Double end spanner

- Clean and apply recommended agents on battery terminals.

11.9 Trafficators Assembly

11.9.1 Direction Trafficator Bulb - Front

- Install bulb **(a)** into holder**(b)**.

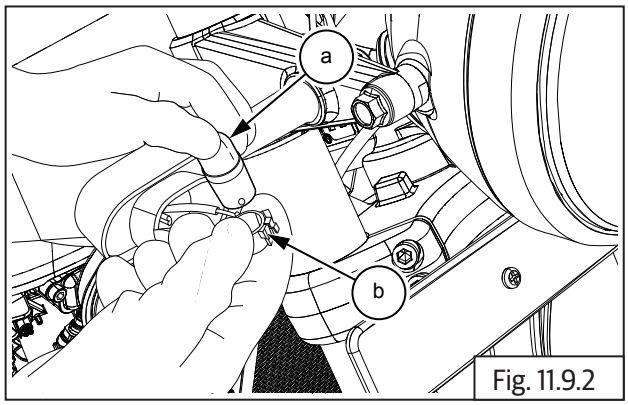

Fig. 11.9.2

- Install holder **(a)** along with bulb into lens **(b)**.

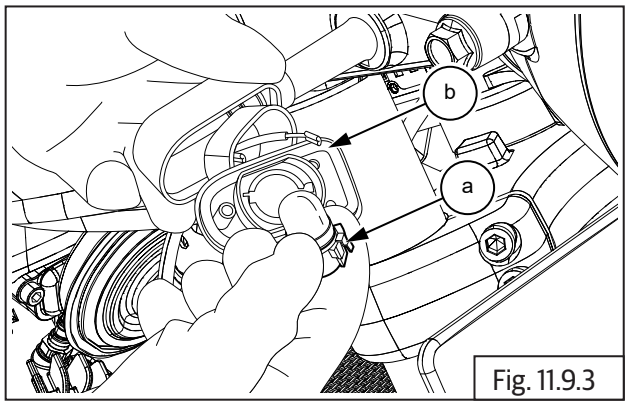

Fig. 11.9.3

- Locate holder assembly **(a)** into lens assembly **(b)**.

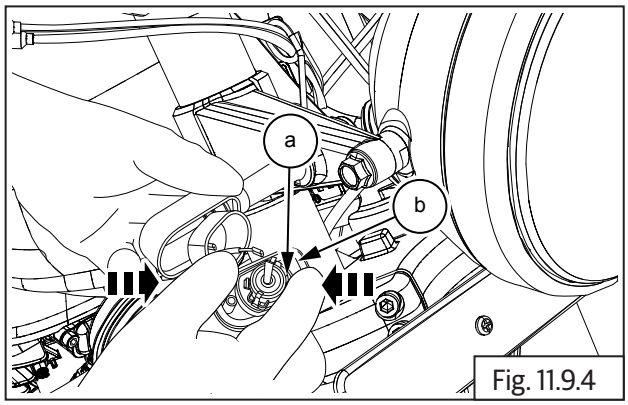

Fig. 11.9.4

- Ensure lock both sides **(b)** into holder assembly **(b)**.

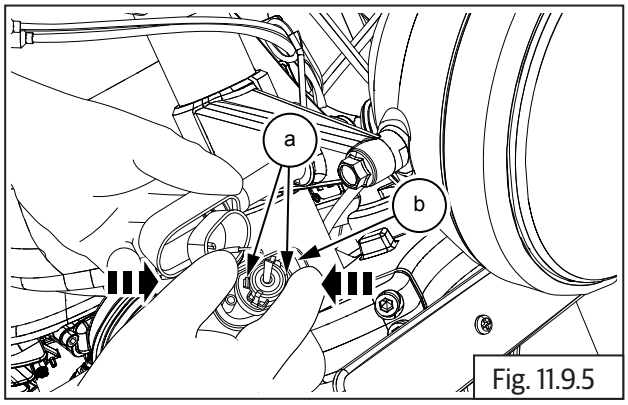

Fig. 11.9.5

- Connect positive (+) connection **(a)** into trafficator holder pin.

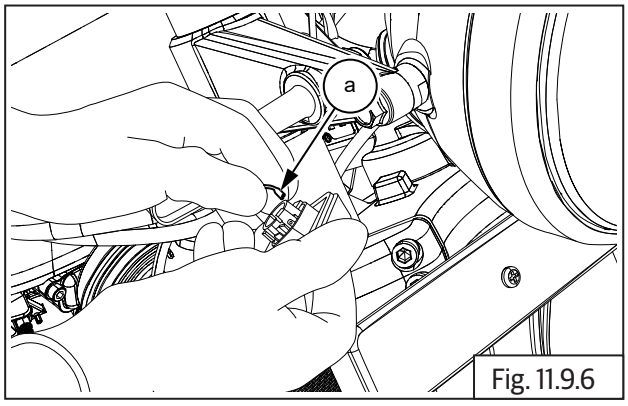

Fig. 11.9.6

- Connect ground connection **(a)** into holder assembly pin **(b)**.

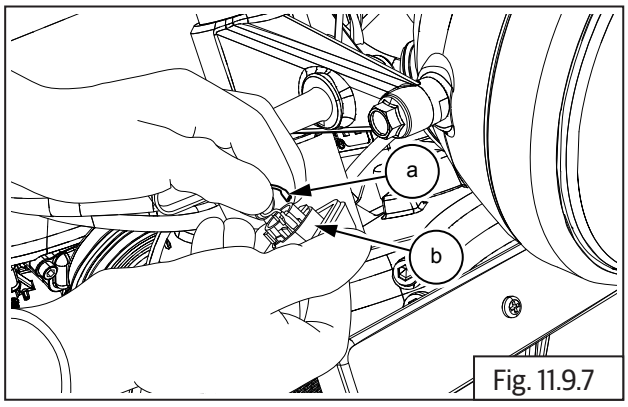

Fig. 11.9.7

- Install grommet **(a)** into lens assembly **(b)**.

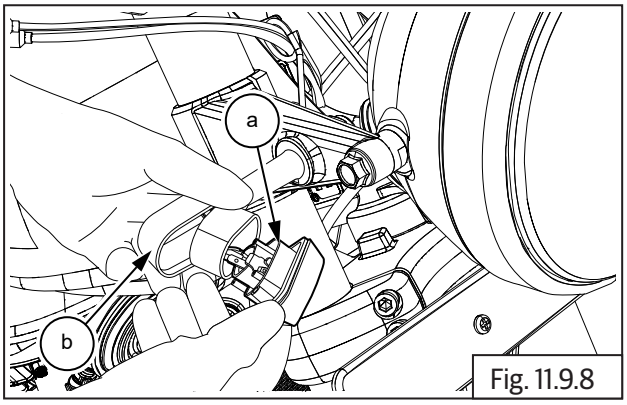

Fig. 11.9.8

- Install lens **(a)** along with bulb assembly.

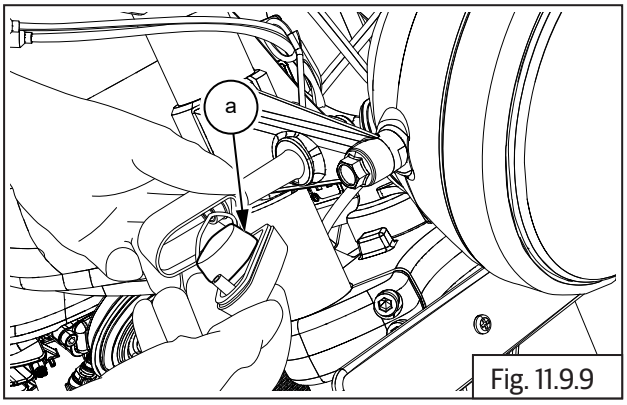

Fig. 11.9.9

- Locate and tighten screw along with washer **(a)** into front trafficator lens RH.

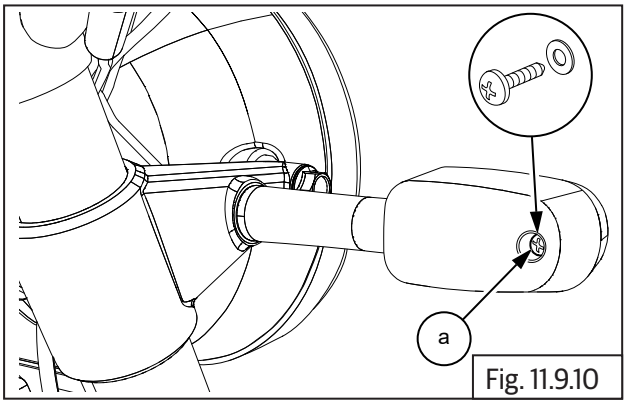

Fig. 11.9.10

	Screw driver

NOTE
• *After assembling headlamp assembly, check light operation.*

11.9.2 Direction Trafficators - Rear

- Locate trafficator into tail lamp housing.
- Locate and insert hex nut **(M12) (a)** along with washer **(b)**.to install rear trafficator **(c)**.

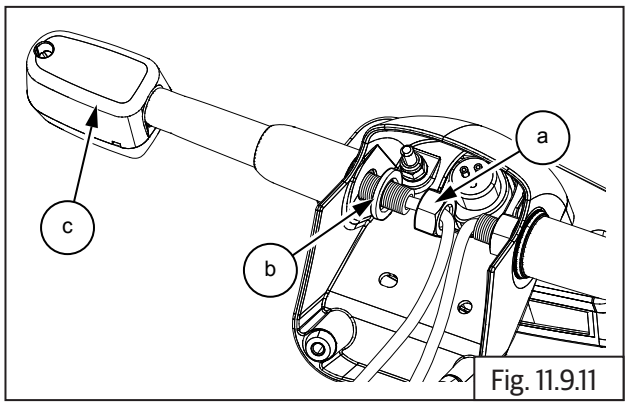

Fig. 11.9.11

	19 mm Ring spanner

- Support and install tail lamp housing **(a)** into the frame **(b)**.

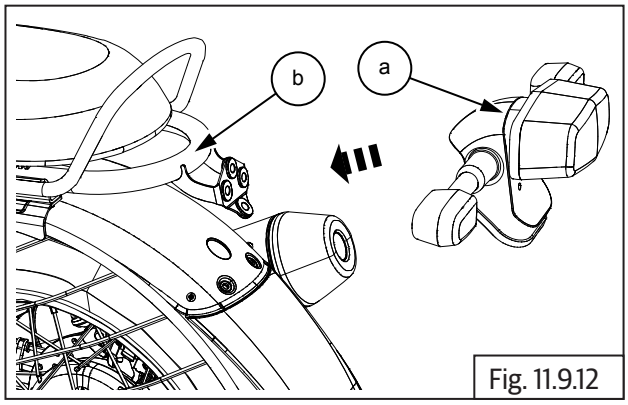

Fig. 11.9.12

11.10 Brake Lamp Connectors Assembly

11.10.1 Brake Lamp Connector - Rear

- Connect rear brake lamp connector **(a)** and ensure it is locked properly.

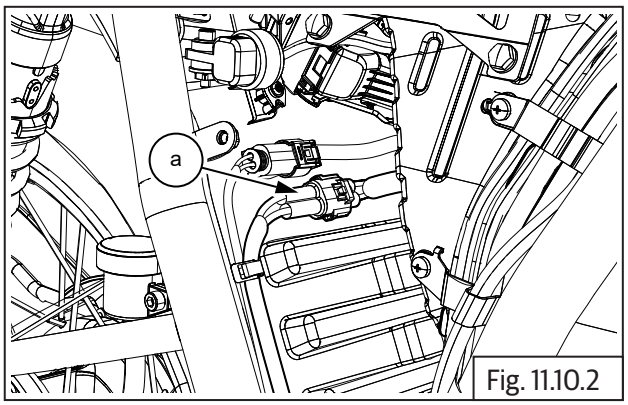

Fig. 11.10.2

NOTE
• *After assembling rear brake lamp switch, check brake light operation.*

11.10.2 Brake Lamp Connector - Front

- Connect front brake lamp connector **(a)**.

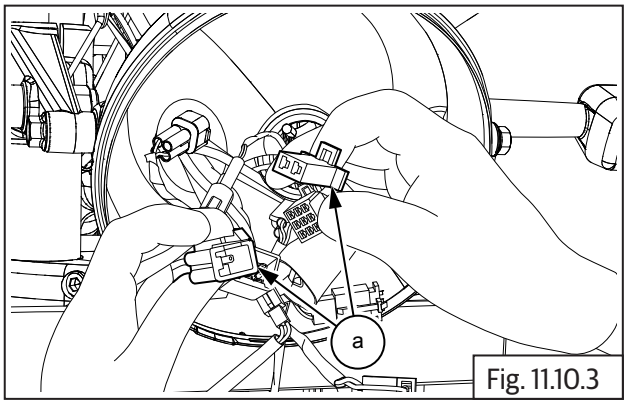

Fig. 11.10.3

- After assembling front brake switch. Check front brake operation at Tail lamp

11.11 Tail Lamp Assembly

11.11.1 Tail Lamp

- Gently push bulb **(a)** and turn clockwise to lock bulb into holder **(b)**.

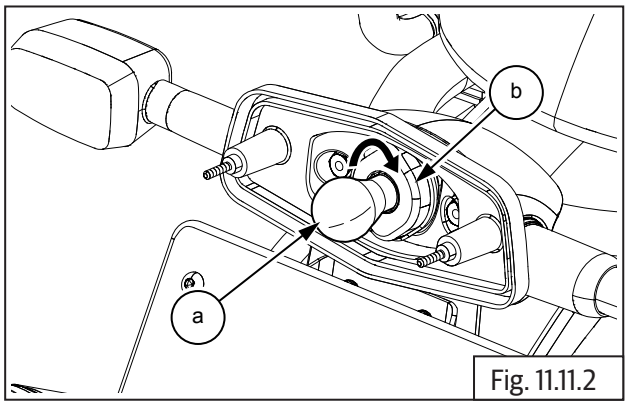

Fig. 11.11.2

- Gently locate lens **(a)** into tail lamp assembly **(b)**.

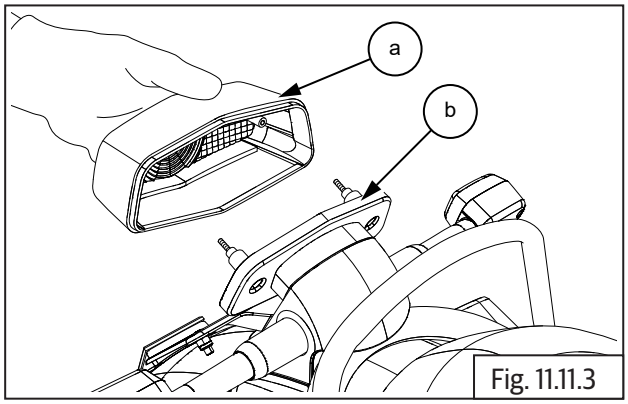

Fig. 11.11.3

- Locate and tighten 2 Nos. screws **(a)** into tail lamp lens **(b)**.

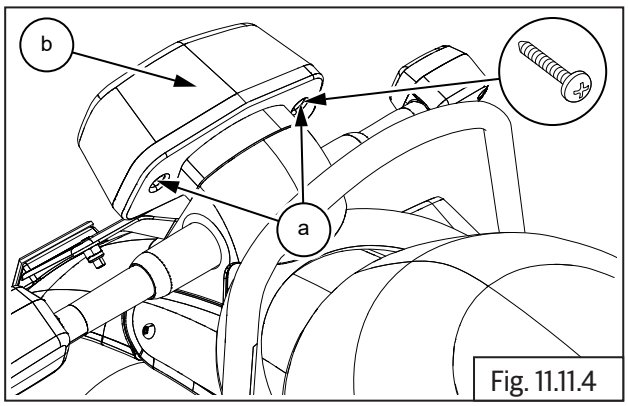

Fig. 11.11.4

	Screw driver (+)

NOTE
• *After assembling tail lamp assembly, check tail lamp operation & brake light operation.*

11.12 Headlamp and Cluster Assembly

11.12.1 Headlamp Housing Holders into Fork Legs

- Assemble LH & RH headlamp housing holders **(a)** into front fork legs LH & RH **(b)**.
- Hold headlamp holders with **58 mm** of distance from the steering stem top face (section 6.9.17).

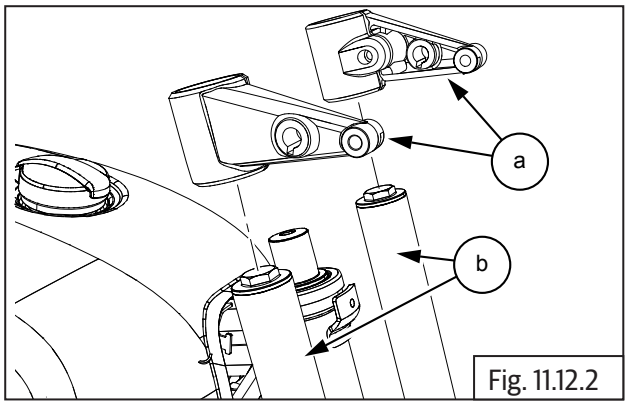

Fig. 11.12.2

Assemble handlebar clip-on LH and RH (section 6.3.6).

- Assemble upper yoke **(a)** into steering stem.

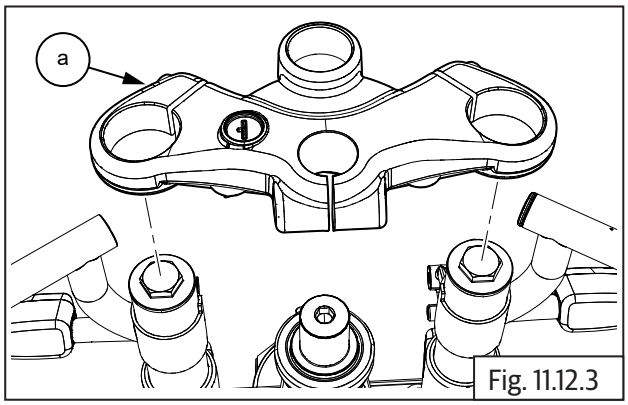

Fig. 11.12.3

- Insert and tighten Hex socket head bolt **(M8) (a)** on top yoke RH.

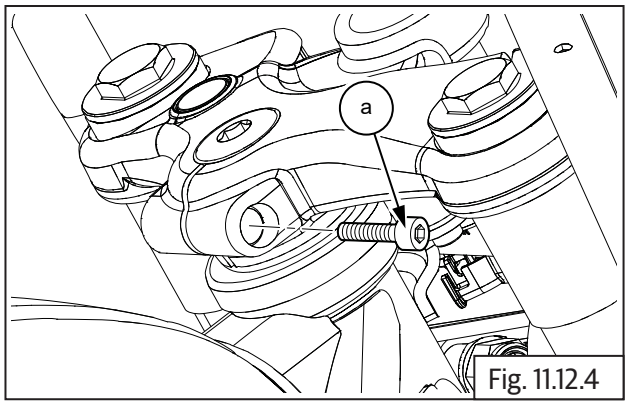

Fig. 11.12.4

	6 mm Allen socket with Ratchet
Torque	20 N-m/2.03 kgf-m

11.12.2 Cluster Assembly

- Insert cluster bracket **(a)** into upper yoke **(b)**.

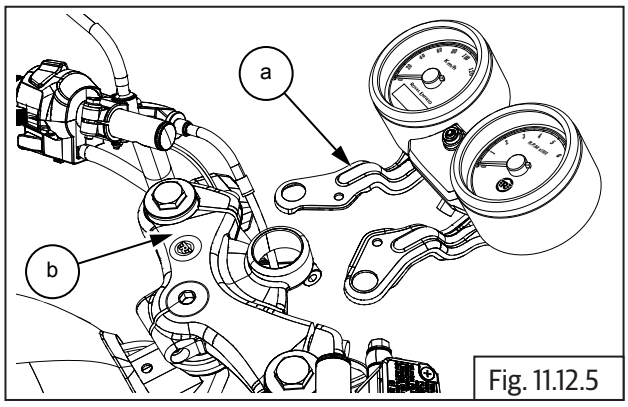

Fig. 11.12.5

- Insert and tighten 2 Nos. Hex socket head bolts **(M6) (a)** into LH and RH of cluster bracket.

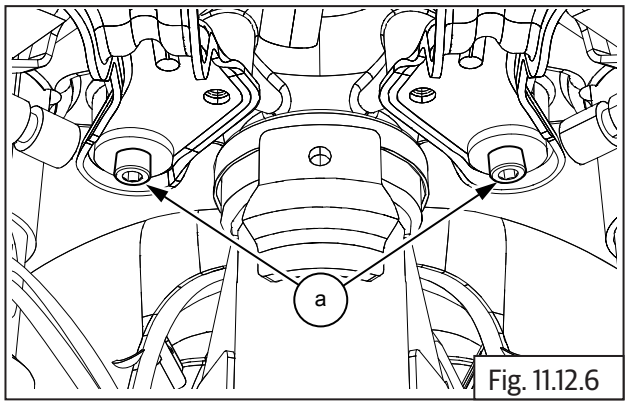

Fig. 11.12.6

	5 mm Allen socket with Ratchet
Torque	10 N-m/1.01 kgf-m

- Locate ignition key set **(a)** into cluster bracket.

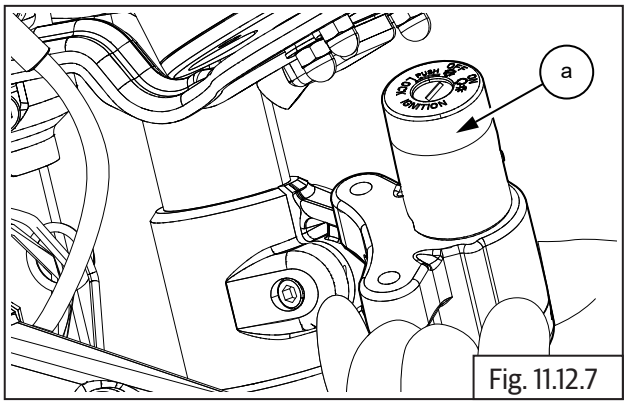

Fig. 11.12.7

- Insert and tighten 2 Nos. Hex socket head bolts **(M6) (a)** into LH & RH of key set.

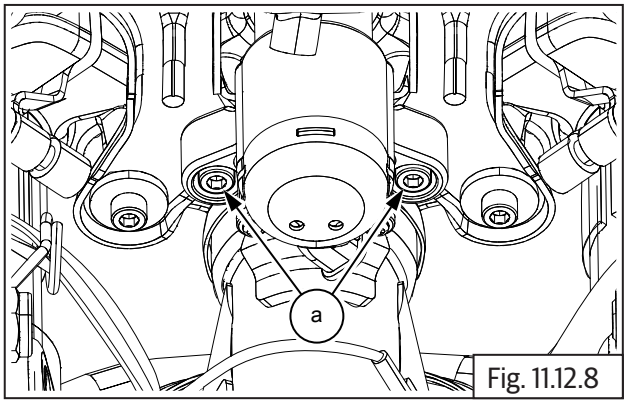

Fig. 11.12.8

	5 mm Allen socket with Ratchet
Torque	10 N-m/1.01 kgf-m

- Connect cluster connection (section 11.12.5).

11.12.3 Direction Trafficators into Headlamp Holder

- Assemble LH direction trafficator **(a)** along with nut **(b)** washer **(c)** into headlamp holder. Similarly assemble RH direction trafficator.

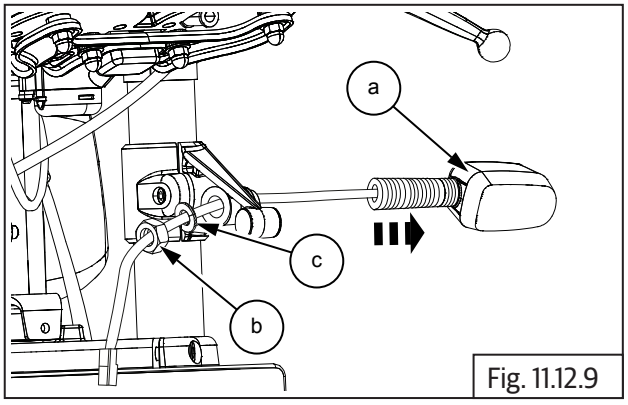

Fig. 11.12.9

- Insert and tighten Hex nut **(M12) (a)** to fix LH & RH direction trafficators.

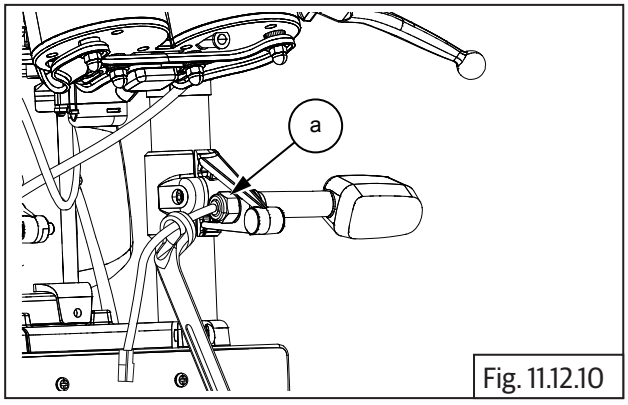

Fig. 11.12.10

	19 mm Ring spanner

11.12.4 Headlamp Housing into Holder LH & RH

- Locate headlamp housing into holder and insert and tighten Hex flange holder bolts **(M8) (a)** on LH & RH housing.

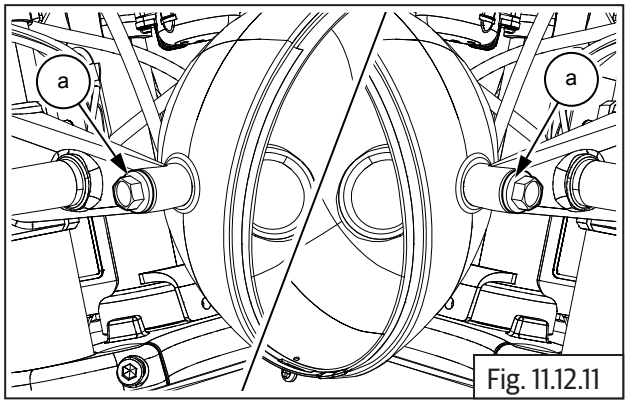

Fig. 11.12.11

	12 mm Socket with Ratchet
Torque	25 N-m/2.54 kgf-m

11.12.5 Connectors and Sensors into Headlamp Housing

- Locate and connect cluster connectors **(a)** and **(b)**. Ensure it is properly seated/locked.

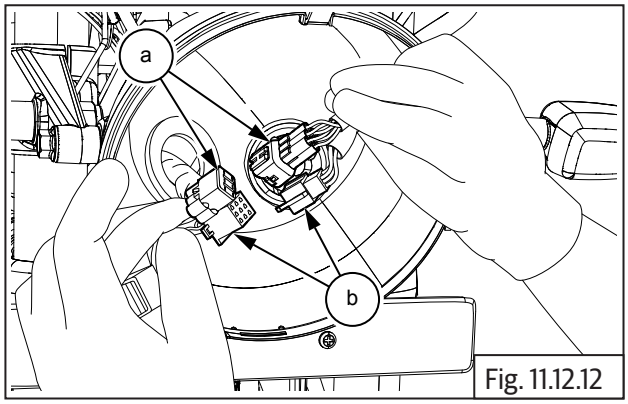

Fig. 11.12.12

- Locate and connect ignition switch connector **(a)**. Ensure it is properly seated/locked.

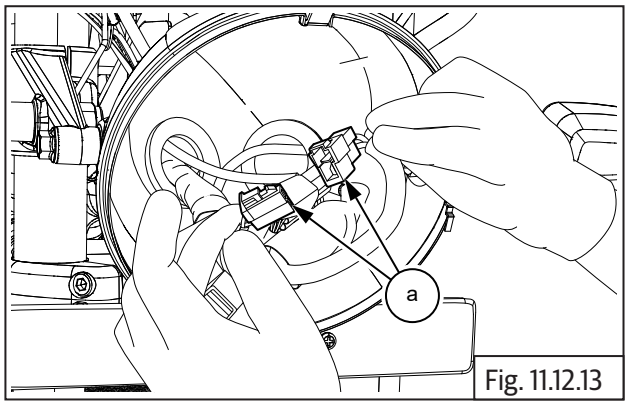

Fig. 11.12.13

- Locate and connect RH trafficator sensor connector **(a)**. Ensure it is properly seated/locked.

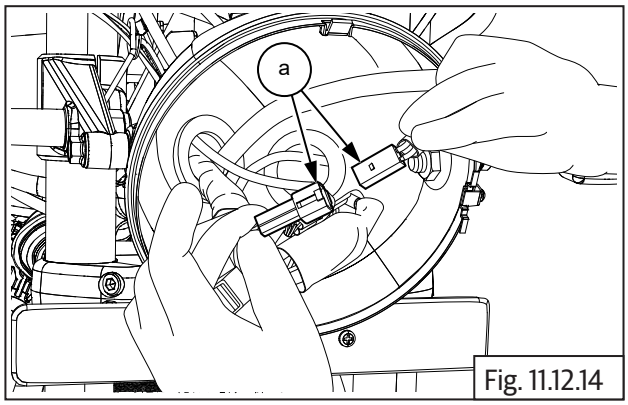

Fig. 11.12.14

- Depress and lock LH trafficator sensor connector **(a)**. Ensure it is properly seated/locked.

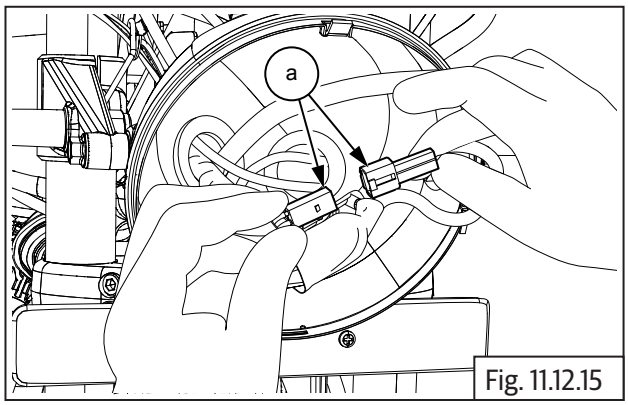

Fig. 11.12.15

- Locate and connect wheel speed sensor connector **(a)**. Ensure it is properly seated/locked.

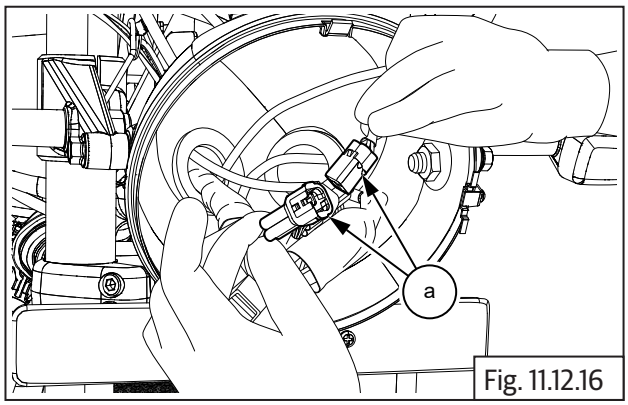

Fig. 11.12.16

- Locate and connect RH module connector **(a)**. Ensure it is properly seated/locked.

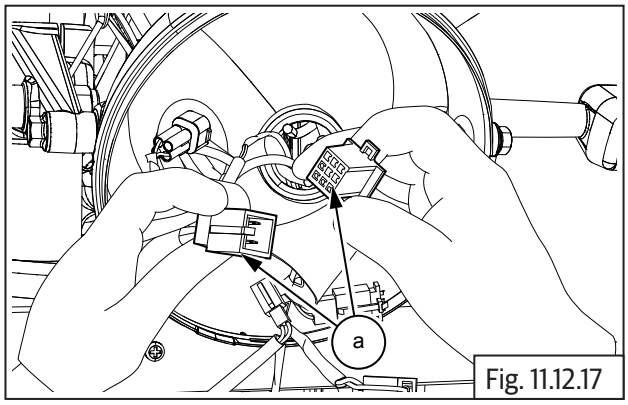

Fig. 11.12.17

- Connect front brake lamp switch connector **(a)**. Ensure it is properly seated/locked.

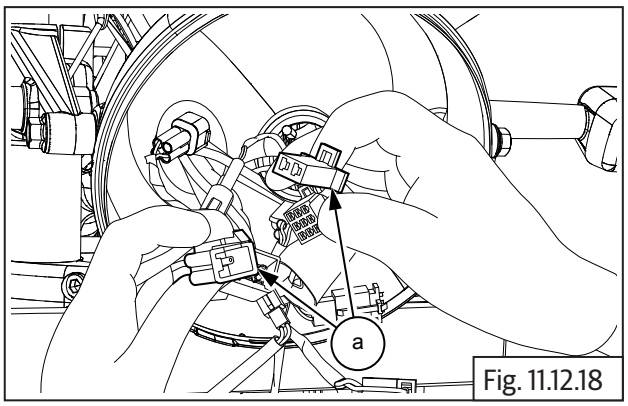

Fig. 11.12.18

- Connect clutch switch connector **(a)**. Ensure it is properly seated/locked.

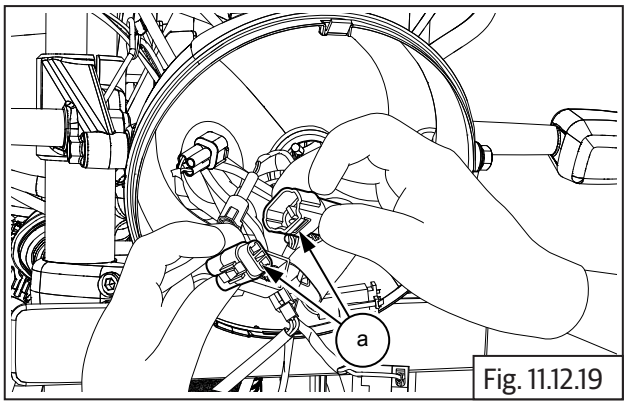

Fig. 11.12.19

- Locate and connect LH module connector **(a)** into headlamp housing. Ensure it is properly seated/locked.

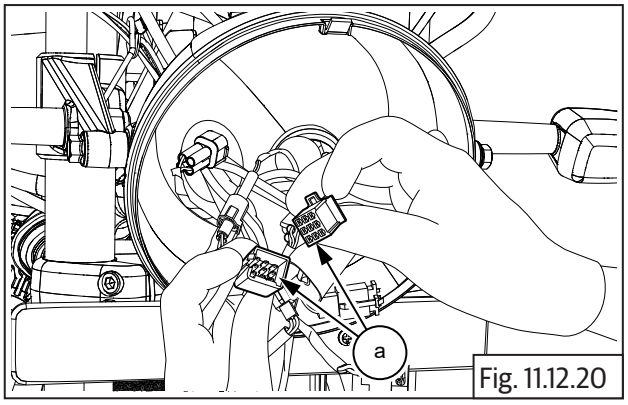

Fig. 11.12.20

11.12.6 Headlamp Bulb into Reflector

⚠ CAUTION

Do not touch glass of bulb. Any strains or finger prints will affect the luminosity.

Ensure pointed tip of bulb does not get damaged

Whenever handling the bulb, hold it firmly at terminal end and not at glass end.

- Gently locate headlamp bulb **(a)** into reflector and install wire clip **(b)** onto reflector **(c)**.

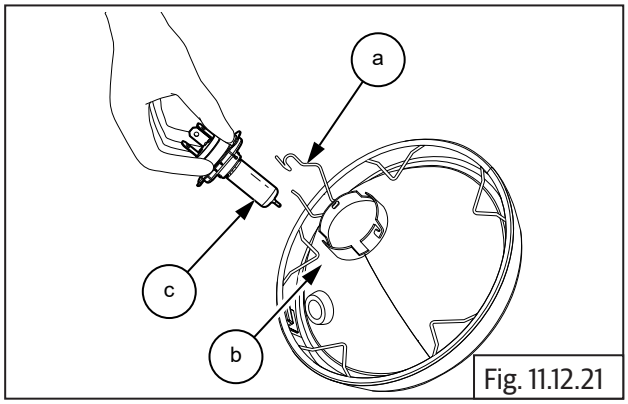

Fig. 11.12.21

- Depress wire clip **(a)** and lock into slot **(b)** in headlamp reflector.

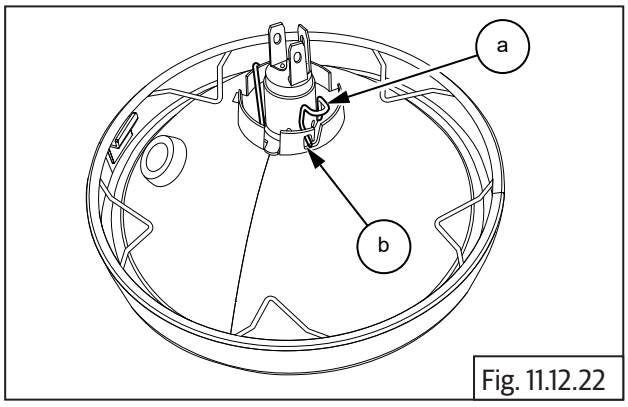

Fig. 11.12.22

11.12.7 Pilot Bulb into Reflector

- Gently depress bulb **(a)** to holder and turn clockwise to fix bulb into holder **(b)**.

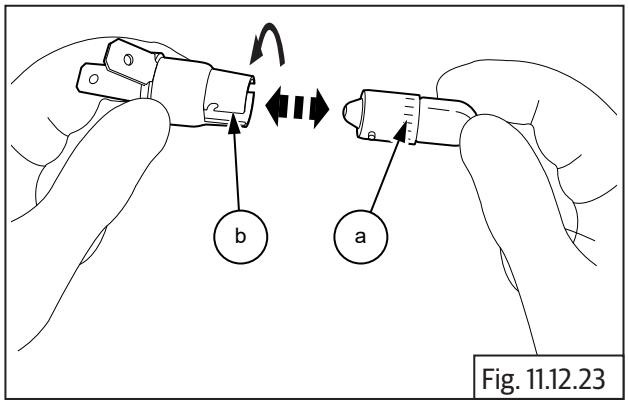

Fig. 11.12.23

11.12.8 Headlamp Reflector into Housing

- Gently assemble pilot bulb **(a)** along with holder **(b)** into headlamp reflector.

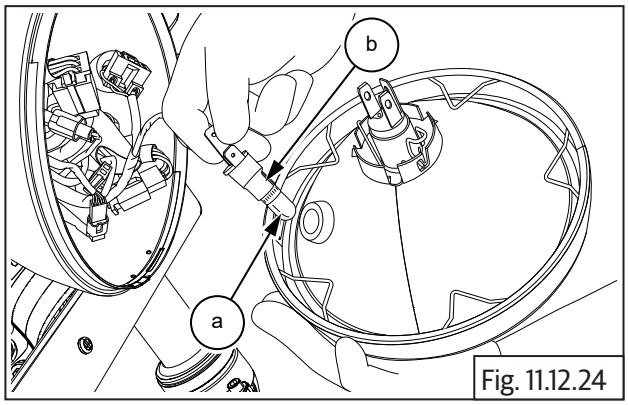

Fig. 11.12.24

- Connect wires **(a)** into pilot bulb main **(b)** and ground **(c)** carefully.

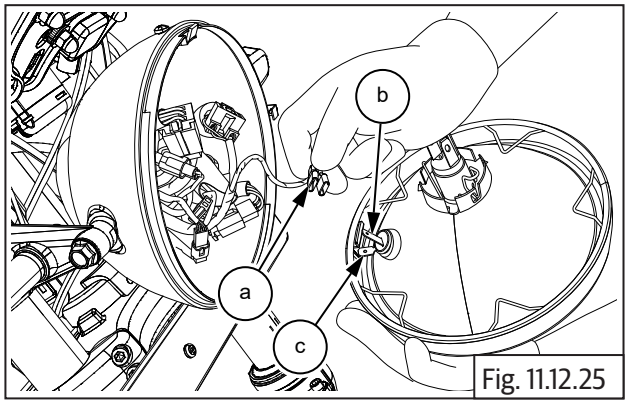

Fig. 11.12.25

- Hold headlamp carefully and connect headlamp connector **(a)** into headlamp bulb.

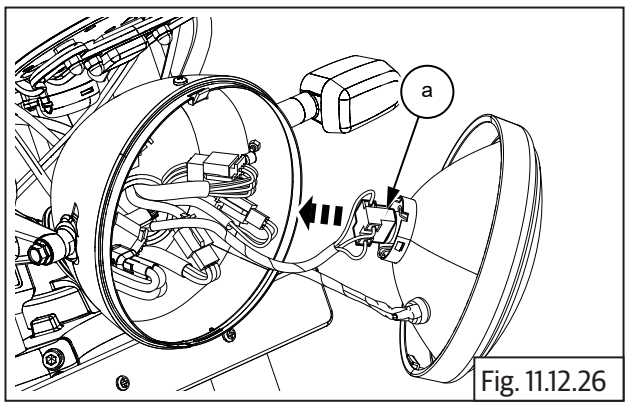

Fig. 11.12.26

⚠ CAUTION

Support the headlamp assembly properly and carefully.

- Carefully assemble reflector **(b)** along with front rim **(a)** into housing **(c)**.

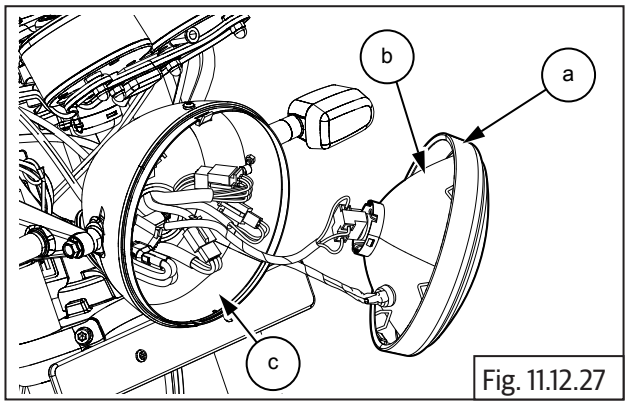

Fig. 11.12.27

- Insert and tighten Phillips screw **(a)** on headlamp.

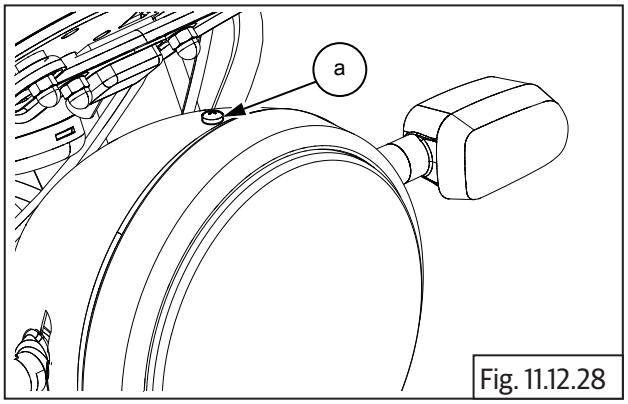

Fig. 11.12.28

	Phillips screw driver

- Inspect and test all electrical functions after completing assembly.

Connectors Layout

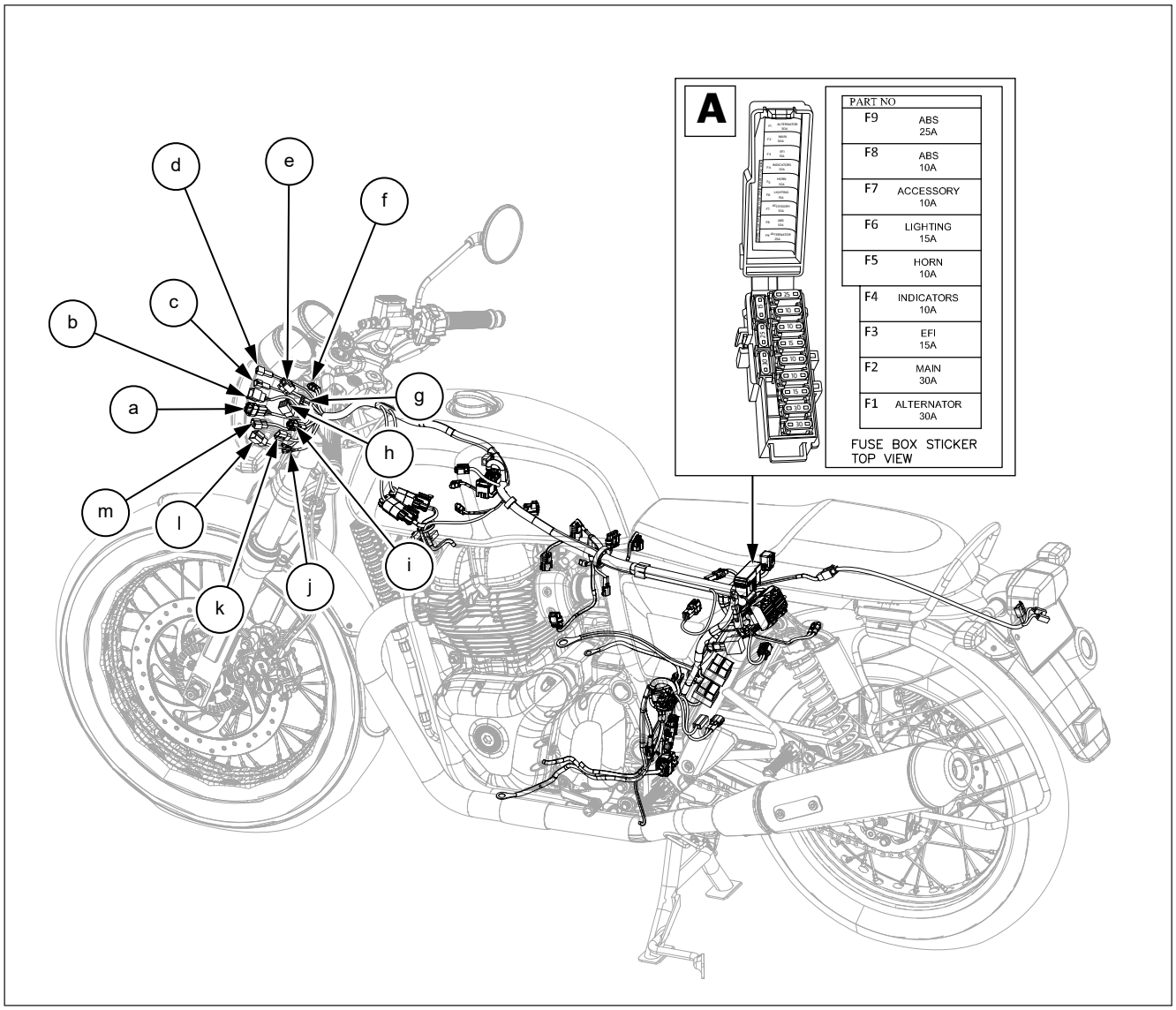

Item No.	Description	Quantity	Item No.	Description	Quantity
a	Wheel Speed Sensor Front	1	h	Cluster Conector (2)	1
b	Switch Moduler RH	1	i	Cluster Conector (1)	1
c	Trafficator FRH	1	j	Pilot Bulb	1
d	Brake Switch Front	1	k	Trafficator FLH	1
e	Head Lamp	1	l	Switch Moduler LH	1
f	Clutch Switch	1	m	Optional (Accessory)	1
g	Ignition Switch	1	A	Fuse Box	

Connectors Layout

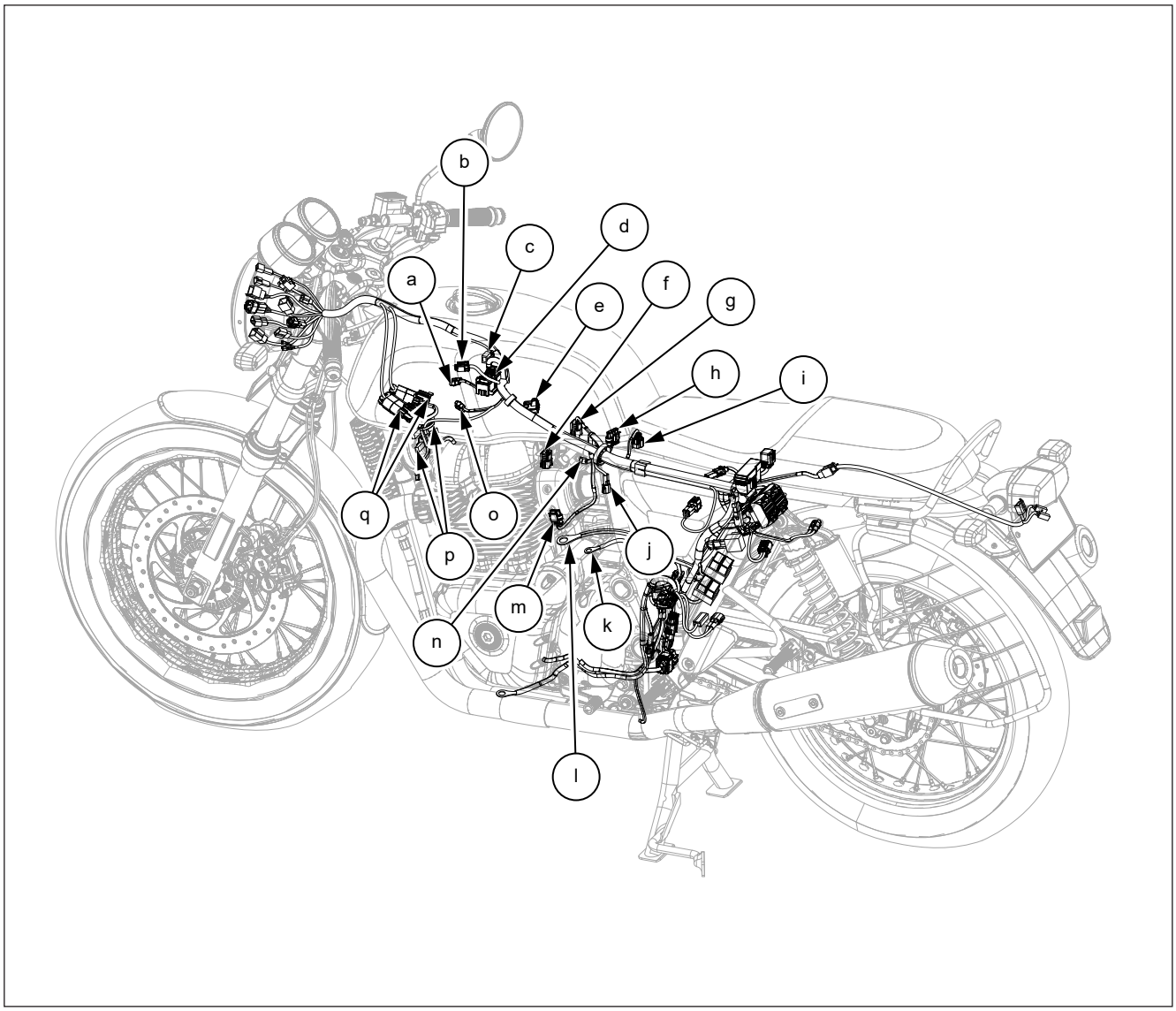

Item No.	Description	Quantity	Item No.	Description	Quantity
a	Ignition Coil RH	1	j	EOT Sensor	1
b	ABS Front Wheel Sensor	1	k	Starter Motor Negative	1
c	Fuel Level Sensor	1	l	Starter Motor Positive	1
d	ABS Modulator	1	m	TPS Sensor	1
e	MAP Sensor	1	n	ISC (Stepper Motor)	1
f	Injector RH	1	o	Ignition Coil LH	1
g	Injector LH	1	p	Horn LH / RH	2
h	Fuel Pump	1	q	Hego / Lambda LH/RH	2
i	ACV Solenoid / (SAI)	1			

Connectors Layout

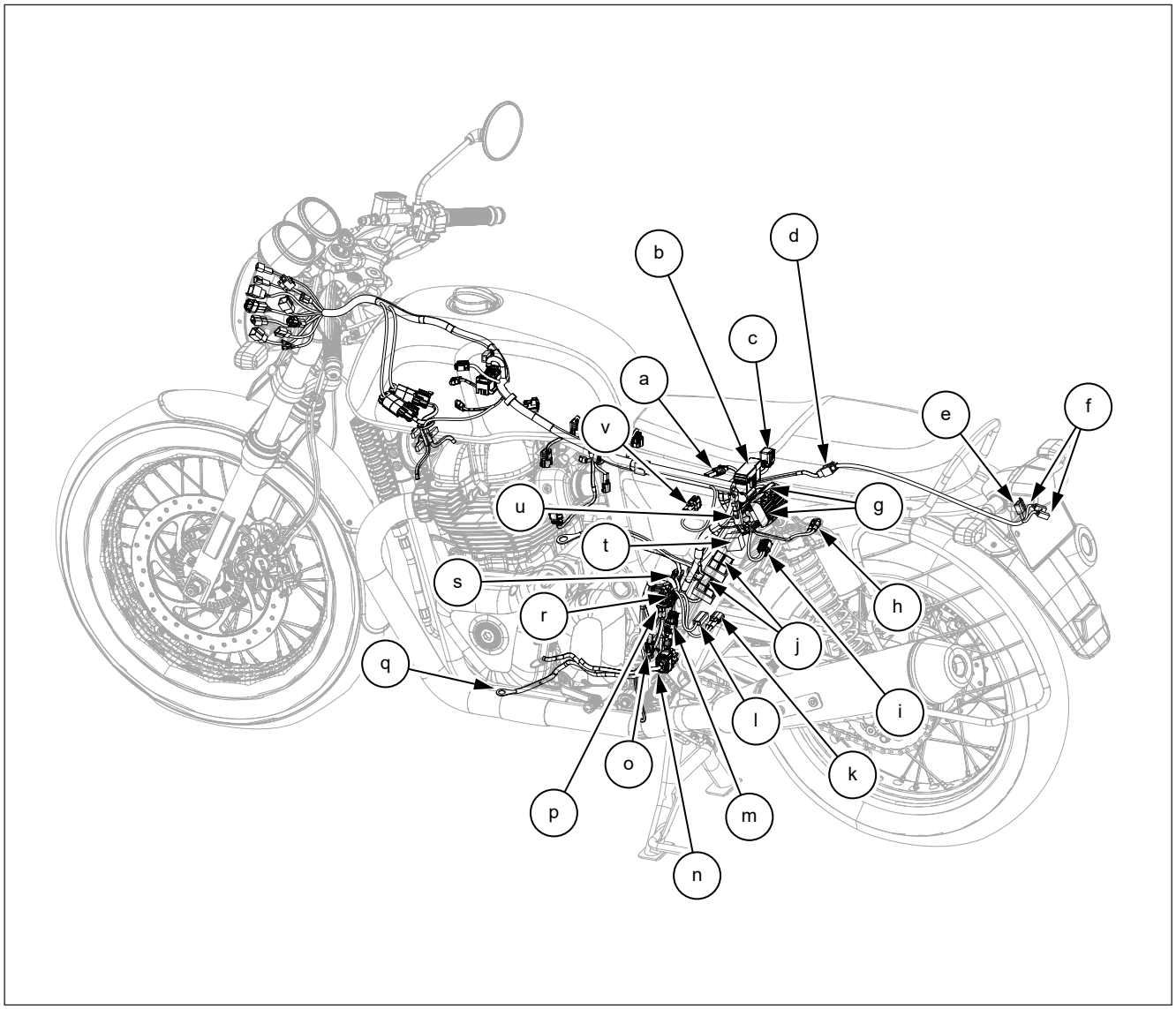

Item No.	Description	Quantity	Item No.	Description	Quantity
a	IAT Sensor	1	l	Battery (+) Positive to Solenoid	1
b	Fuse Box	1	m	RR Unit (1)	1
c	DOL (DIAGNOSTICS)	1	n	RR Unit to Magneto Coil	1
d	Tail Light Sub Harness	1	o	Crank Position Sensor	1
e	STOP Light	1	p	Gear Position Sensor	1
f	Trafficator LH / RH	2	q	Oil Pressure Switch	1
g	ECU Connector (1) and (2)	2	r	EVAP Purge Control Valve	1
h	Rear Brake Light Switch	1	s	Side Stand Switch	1
i	ABS Rear Wheel Sensor	1	t	Flasher	1
j	Relay Starter- Main / Relay Fuel Pump - ACC	3	u	Battery (+) Positive to Fuse Box	1
k	Starter Solenoid	1	v	Rollover Sensor	1

Connectors

ECU CONNECTOR 1 (Pin No 101 ~ 156)

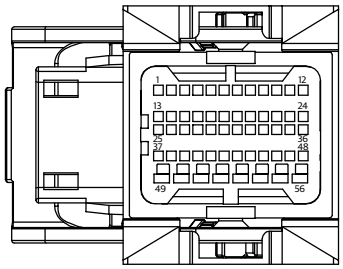

ECU CONNECTOR 2 (Pin No 201 ~ 256)

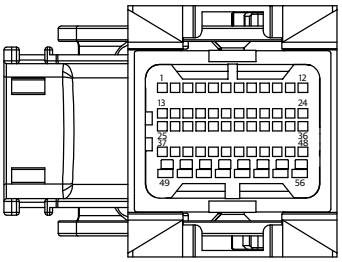

ABS MODULATOR

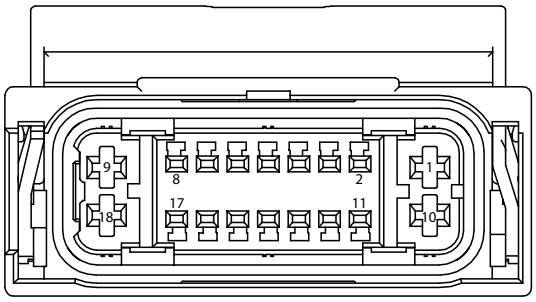

FUSE BOX

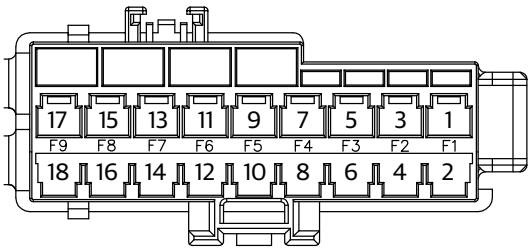

COLOR CODE:

PIN	COL	PIN	COL
1	R	10	V
2	R	11	R-W
3	R	12	G-W
4	BR	13	R
5	BR	14	BR
6	R	15	R
7	R-W	16	R-W
8	L	17	R
9	R-W	18	R-W

PART NO	
F9	ABS 25A
F8	ABS 10A
F7	ACCESSORY 10A
F6	LIGHTING 15A
F5	HORN 10A
F4	INDICATORS 10A
F3	EFI 15A
F2	MAIN 30A
F1	ALTERNATOR 30A

FUSE BOX STICKER TOP VIEW

Connectors

HEAD LAMP

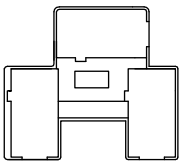

BLACK

CLUTCH SWITCH

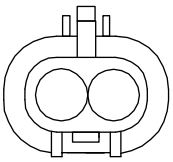

BLACK

SW MODULE LH

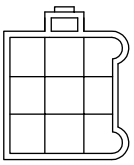

BLACK

WHEEL SPEED SENSOR

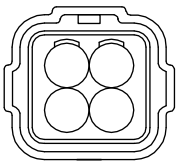

BLACK

PARK LAMP-1

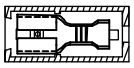

BLACK

PARK LAMP-2

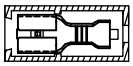

ACCESSORY

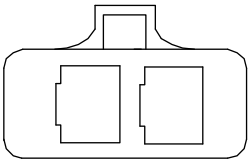

YELLOW

SW MODULER RH

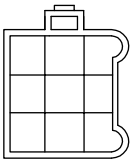

RED

LAMBADA 1

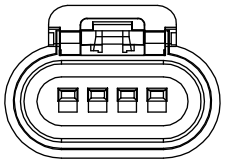

BLACK

INST. CLUSTER-1

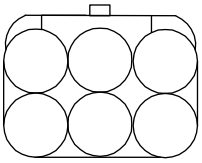

BLACK

FRONT BR SW

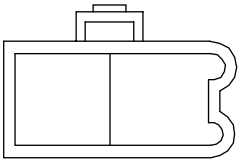

GREEN

TRAFFICATOR FRH

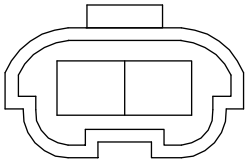

NATURAL

LAMBADA 2

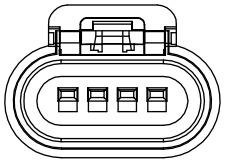

BLACK

INST. CLUSTER-2

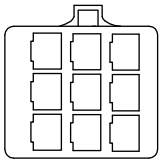

NATURAL

IGNITION SWITCH

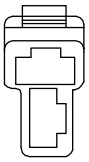

BLACK

TRAFFICATOR FLH

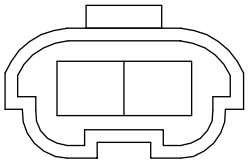

BLACK

SAI SOLENOID

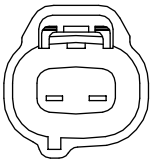

BLUE

IGNITION COIL-1

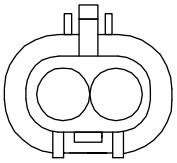

WHITE

HORN-2A

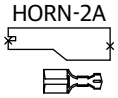

BLACK

HORN-2B

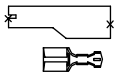

TPS

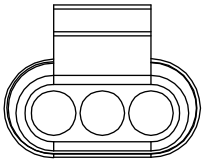

BLACK

DIAGNOSTICS

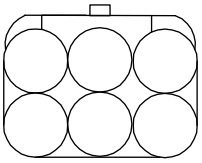

BLACK

IGNITION COIL-2

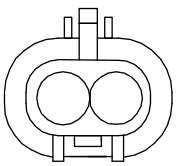

BLACK

MAP SENSOR

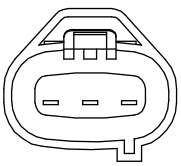

W/P

ISA

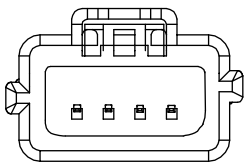

BLACK

OIL PRESSURE

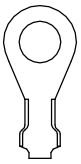

Connectors

ABS FRONT WHEEL SENSOR

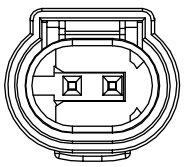

BLACK

INJECTOR-1

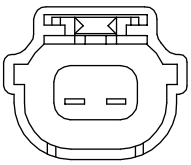

DL-GREY

INTAKE TEMP

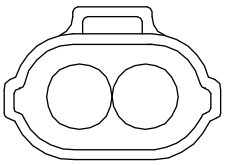

WHITE

CRANK POSITION SENSOR

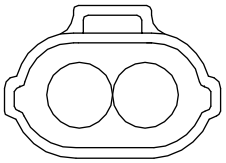

BLACK

HORN-1A

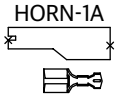

BLACK

HORN-1B

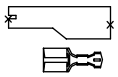

INJECTOR-2

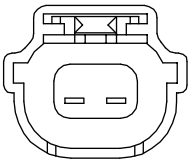

DL-GREY

ROLL OVER SENSOR

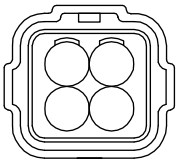

NATURAL

RR UNIT

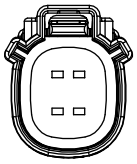

BLACK

ABS REAR WHEEL SENSOR

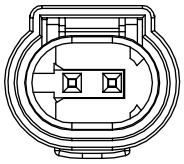

BLACK

PURGE VALVE

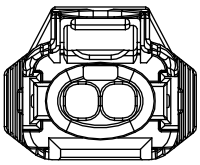

BLACK

RELAY STARTER + MAIN

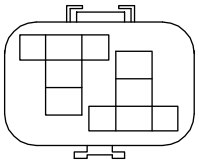

BLACK

FUEL PUMP

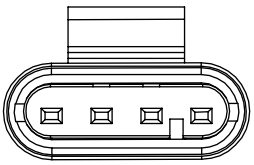

BLACK

FLASHER

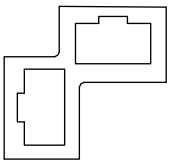

BLACK

GEAR POSITION SENSOR

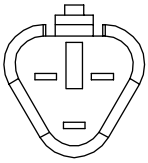

BLACK

RELAY FUEL PUMP + ACC

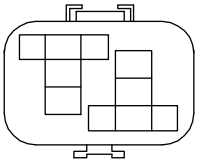

BLACK

BATT +VE

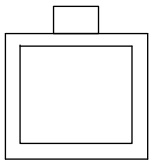

RED

REAR BR SW

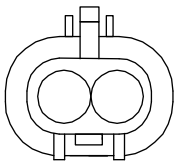

BLACK

SIDE STAND SW

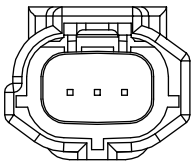

BLACK

BATT -VE

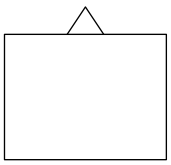

BLACK

TAIL LIGHT SUBHARNESS

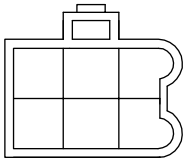

BLACK

STARTER SOLENOID

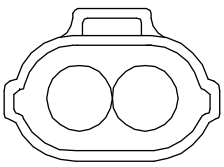

WHITE

FUEL LEVEL SENSOR

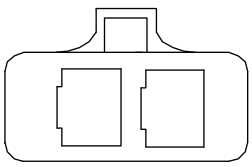

GREEN

WIRING DIAGRAMS

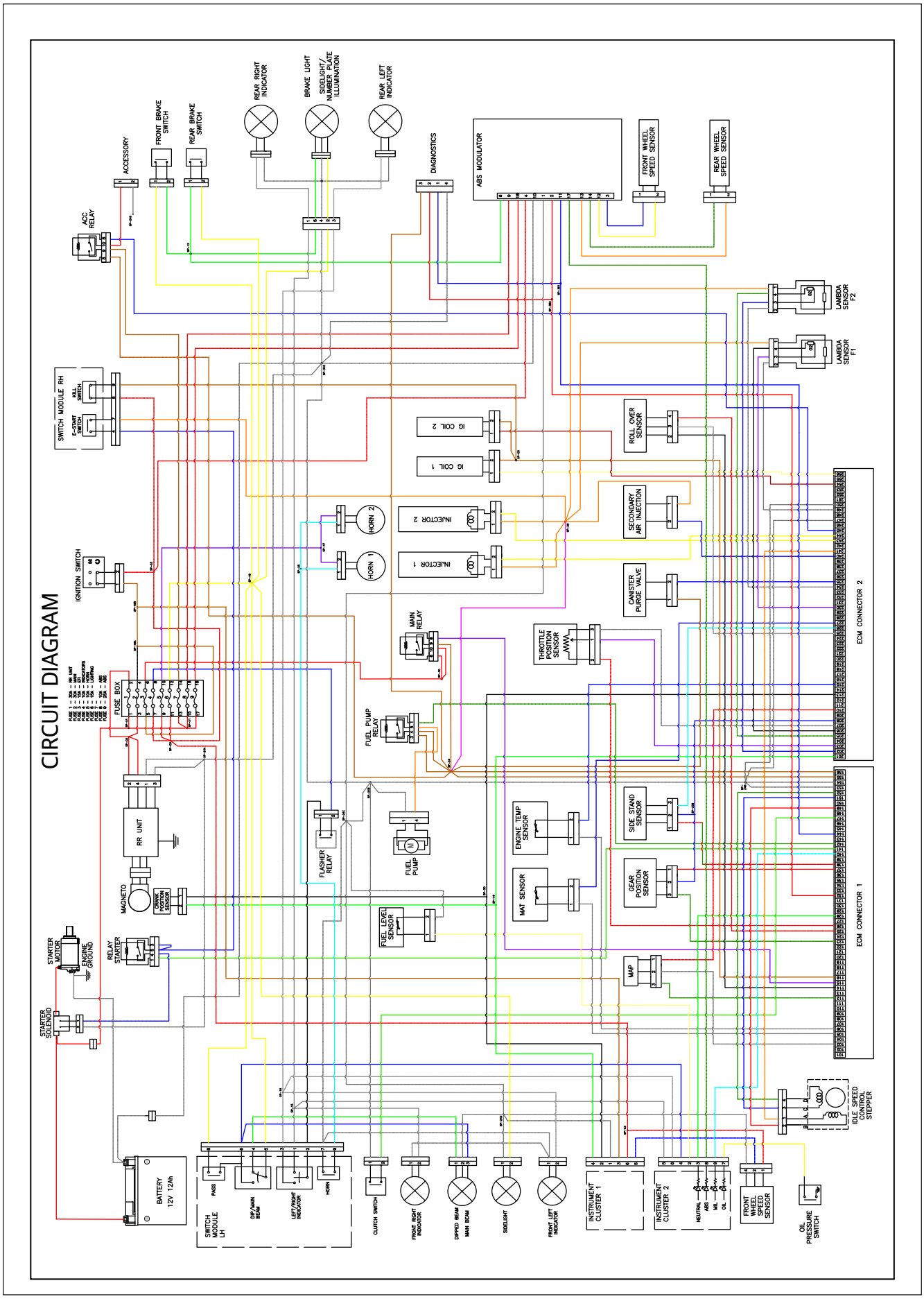
CIRCUIT DIAGRAM
REAR RIGHT INDICATOR
BRAKE LIGHT
SIDELIGHT/ NUMBER PLATE ILLUMINATION
REAR LEFT INDICATOR
ACCESSORY
FRONT BRAKE SWITCH
REAR BRAKE SWITCH
DIAGNOSTICS
ABS MODULATOR
FRONT WHEEL SPEED SENSOR
REAR WHEEL SPEED SENSOR
ACC RELAY
LAMBDA SENSOR F2
LAMBDA SENSOR F1
SWITCH MODULE RH
IG COIL 2
IG COIL 1
ROLL OVER SENSOR
INJECTOR 2
INJECTOR 1
HORN 2
HORN 1
SECONDARY AIR INJECTION
IGNITION SWITCH
CANISTER PURGE VALVE
MAIN RELAY
THROTTLE POSITION SENSOR
ECM CONNECTOR 2
FUSE BOX
FUEL PUMP RELAY
RR UNIT
FLASHER RELAY
FUEL PUMP
ENGINE TEMP SENSOR
SIDE STAND SENSOR
MAGNETO
MAT SENSOR
GEAR POSITION SENSOR
FUEL LEVEL SENSOR
ECM CONNECTOR 1
STARTER MOTOR
ENGINE GROUND
RELAY STARTER
MAP
STARTER SOLENOID
IDLE SPEED CONTROL STEPPER
BATTERY 12V 12Ah
SWITCH MODULE LH
PASS
DIP/MAIN BEAM
LEFT/RIGHT INDICATOR
HORN
CLUTCH SWITCH
FRONT RIGHT INDICATOR
DIPPED BEAM
MAIN BEAM
SIDELIGHT
FRONT LEFT INDICATOR
INSTRUMENT CLUSTER 1
INSTRUMENT CLUSTER 2
NEUTRAL
ABS
MIL
OIL
FRONT WHEEL SPEED SENSOR
OIL PRESSURE SWITCH

Ground Circuit Diagram

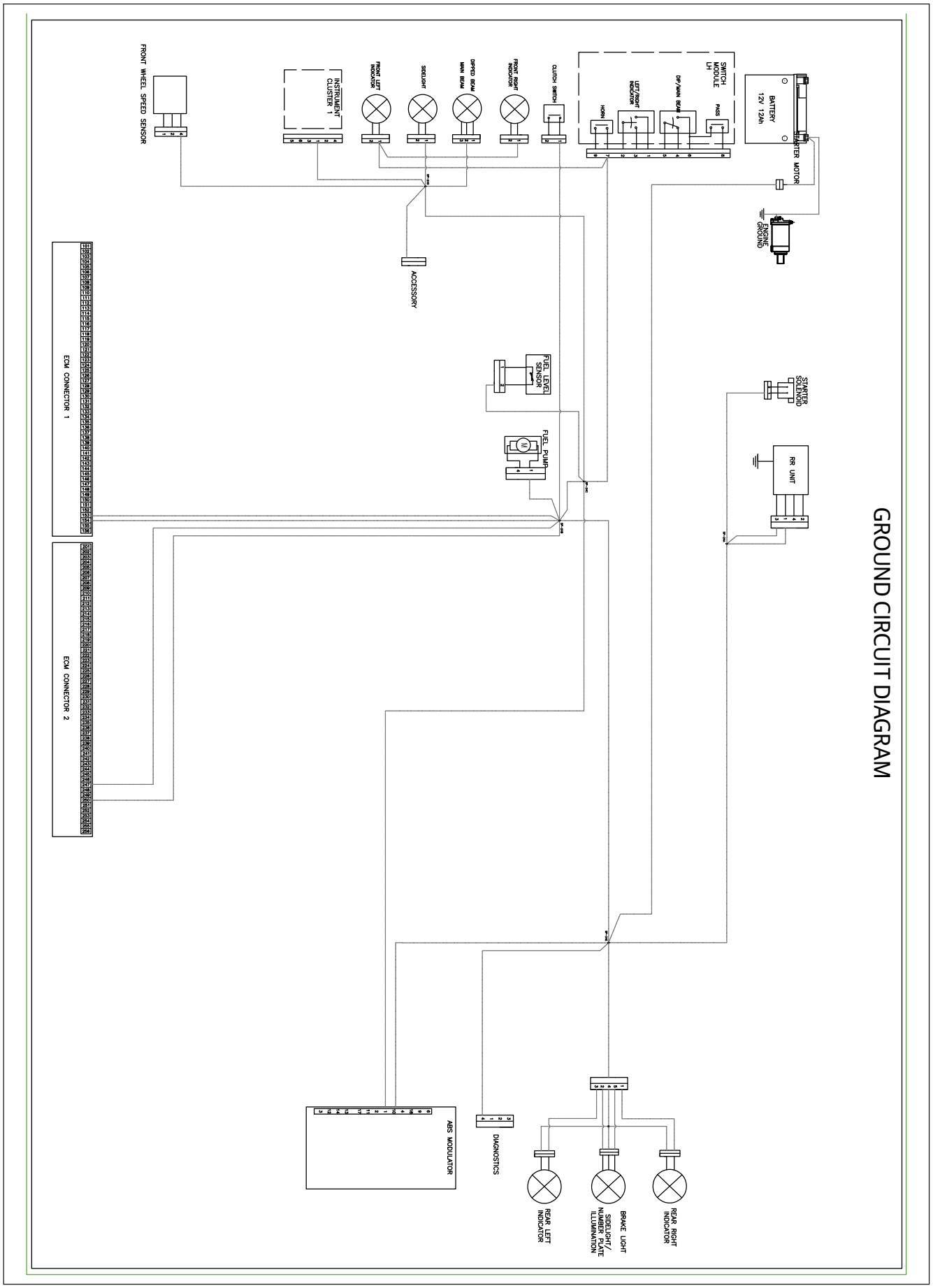

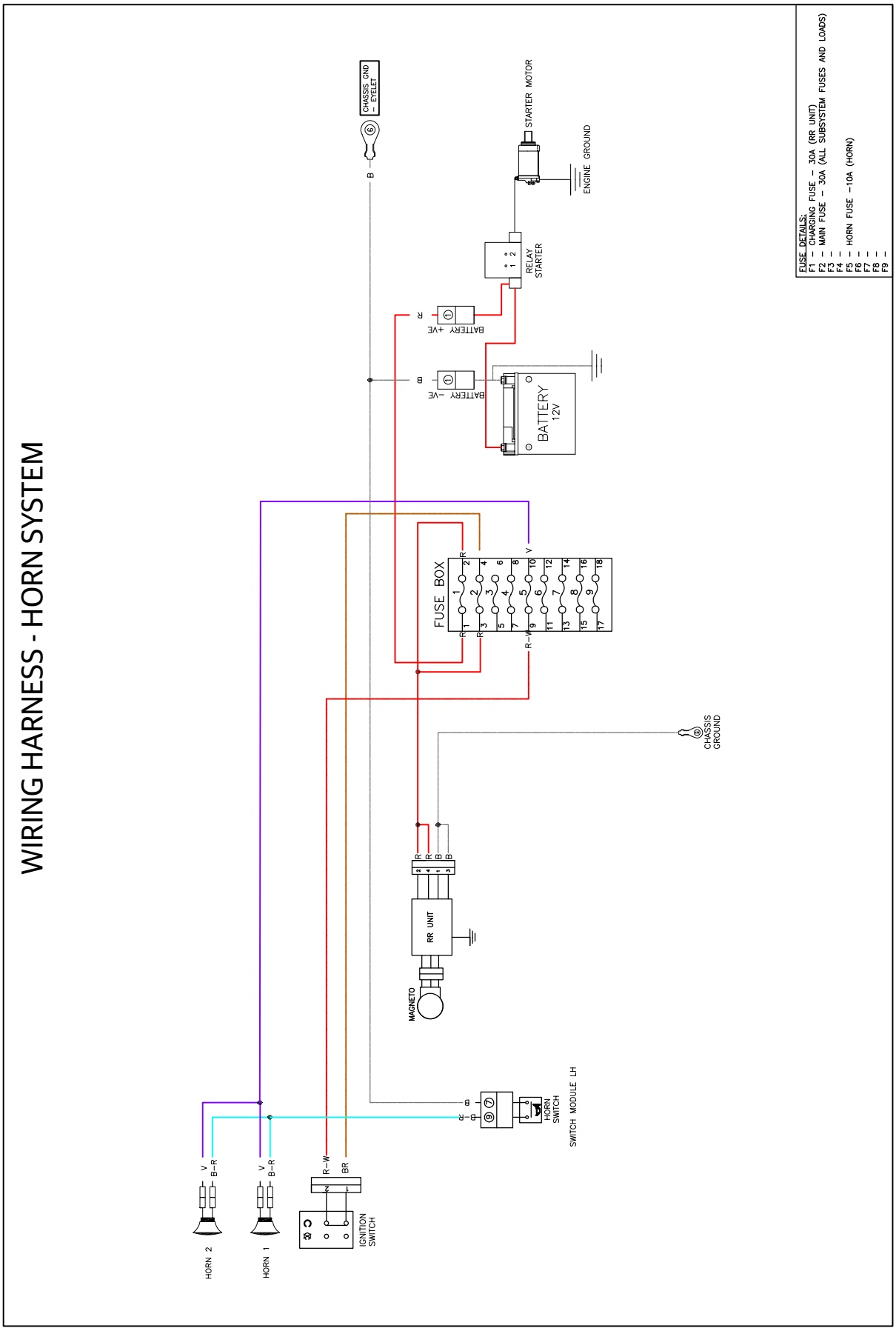
WIRING HARNESS - HORN SYSTEM
FUSE DETAILS:
F1 – CHARGING FUSE – 30A (RR UNIT)
F2 – MAIN FUSE – 30A (ALL SUBSYSTEM FUSES AND LOADS)
F3 –
F4 –
F5 – HORN FUSE –10A (HORN)
F6 –
F7 –
F8 –
F9 –
CHASSIS GND – EYELET
STARTER MOTOR
ENGINE GROUND
RELAY STARTER
BATTERY +VE
BATTERY –VE
BATTERY 12V
FUSE BOX
CHASSIS GROUND
RR UNIT
MAGNETO
HORN SWITCH
SWITCH MODULE LH
IGNITION SWITCH
HORN 2
HORN 1

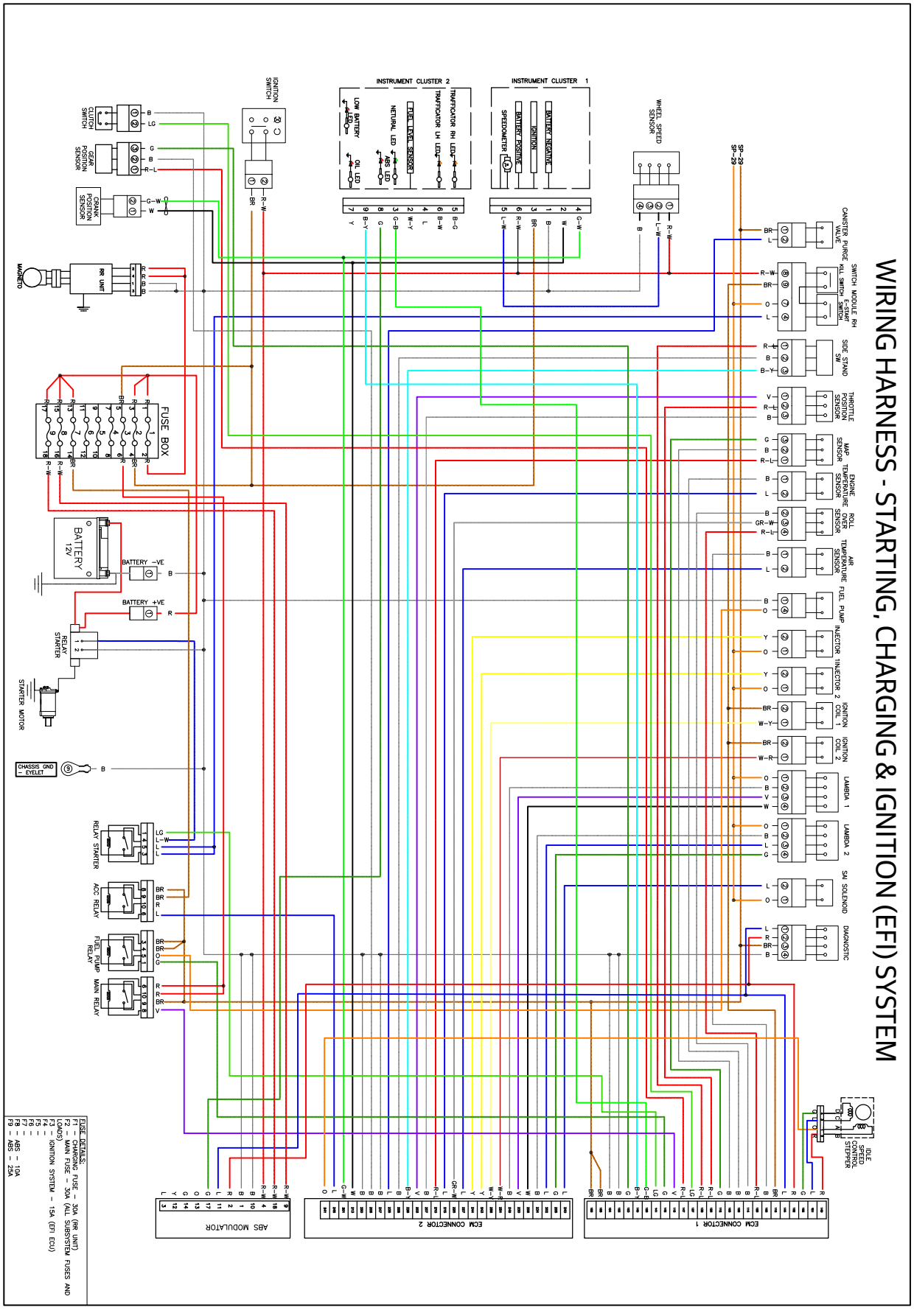
WIRING HARNESS - STARTING, CHARGING & IGNITION (EFI) SYSTEM
INSTRUMENT CLUSTER 2
INSTRUMENT CLUSTER 1
IGNITION SWITCH
FUSE BOX
BATTERY 12V
BATTERY -VE
BATTERY +VE
RELAY STARTER
STARTER MOTOR
CHASSIS GND - EYELET
RR UNIT
MAGNETO
ABS MODULATOR
ECM CONNECTOR 1
ECM CONNECTOR 2
IDLE SPEED CONTROL STEPPER
FUSE DETAILS:
F1 – CHARGING FUSE – 30A (RR UNIT)
F2 – MAIN FUSE – 30A (ALL SUBSYSTEM FUSES AND LOADS)
F3 – IGNITION SYSTEM – 15A (EFI ECU)
F4 –
F5 –
F6 –
F7 –
F8 – ABS – 10A
F9 – ABS – 25A

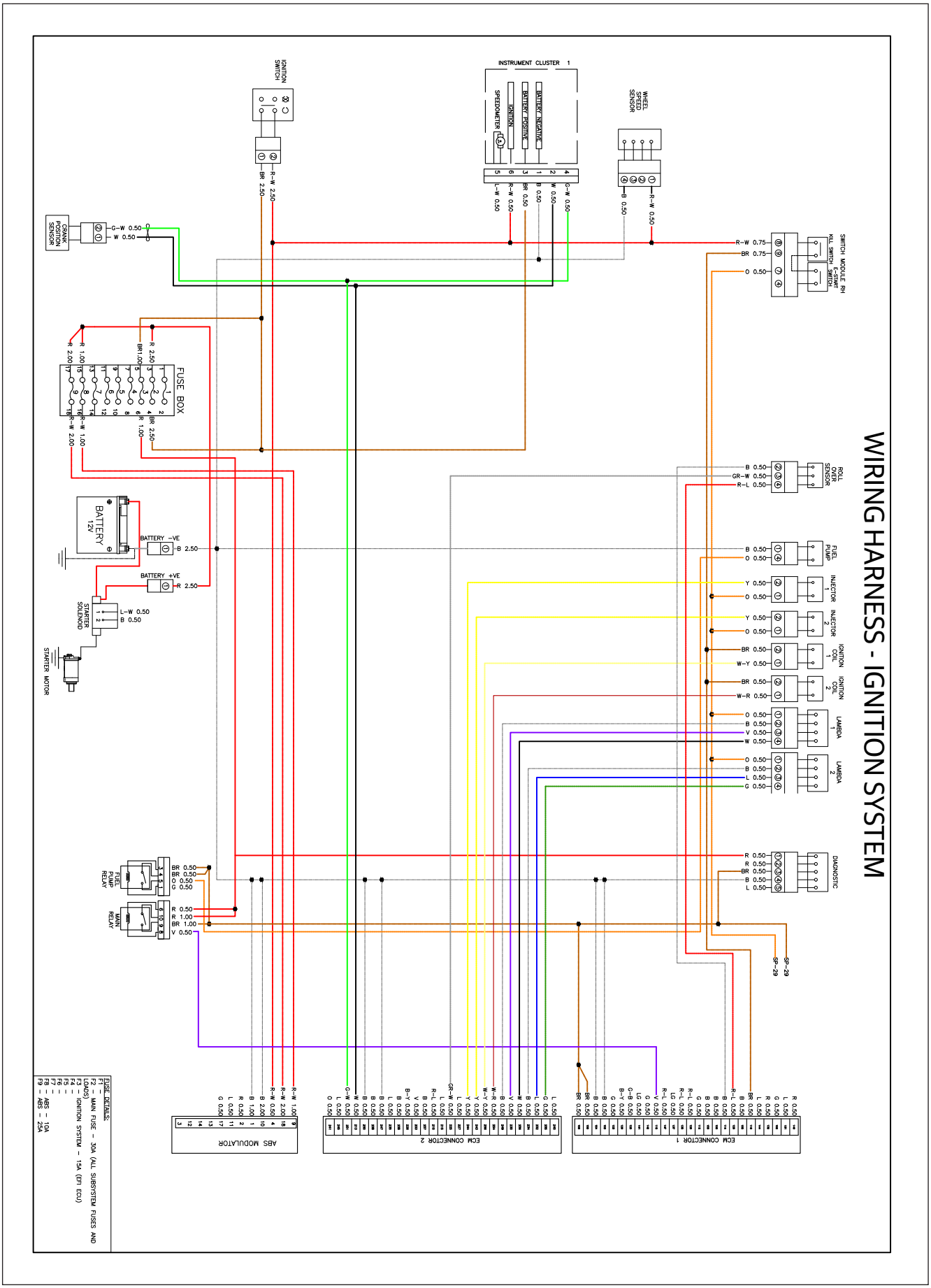
WIRING HARNESS - IGNITION SYSTEM
IGNITION SWITCH
INSTRUMENT CLUSTER 1
SPEEDOMETER
IGNITION
BATTERY POSITIVE
BATTERY NEGATIVE
WHEEL SPEED SENSOR
CRANK POSITION SENSOR
FUSE BOX
BATTERY 12V
BATTERY -VE
BATTERY +VE
STARTER SOLENOID
STARTER MOTOR
SWITCH MODULE RH
KILL SWITCH
START SWITCH
ROLL OVER SENSOR
FUEL PUMP
INJECTOR 1
INJECTOR 2
IGNITION COIL
IGNITION COIL 2
LAMBDA 1
LAMBDA 2
DIAGNOSTIC
FUEL PUMP RELAY
MAIN RELAY
ABS MODULATOR
ECM CONNECTOR 2
ECM CONNECTOR 1
FUSE DETAILS:
F1 – MAIN FUSE – 30A (ALL SUBSYSTEM FUSES AND LOADS)
F2 – IGNITION SYSTEM – 15A (EFI ECU)
F3 –
F4 –
F5 –
F6 –
F7 –
F8 – ABS – 10A
F9 – ABS – 25A

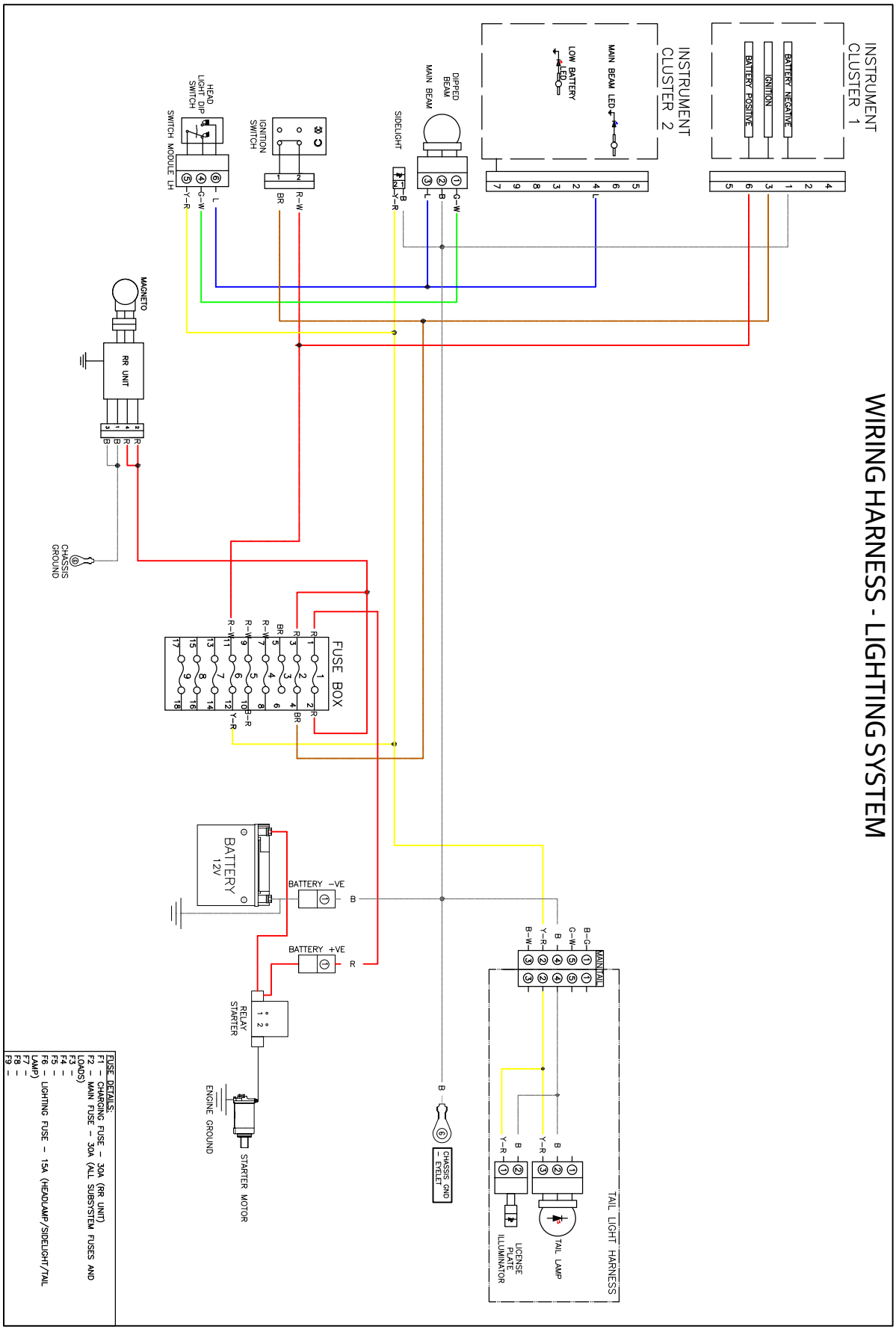
WIRING HARNESS - LIGHTING SYSTEM
INSTRUMENT CLUSTER 1
BATTERY NEGATIVE
IGNITION
BATTERY POSITIVE
INSTRUMENT CLUSTER 2
MAIN BEAM LED
LOW BATTERY LED
DIPPED BEAM
MAIN BEAM
SIDELIGHT
HEAD LIGHT DIP SWITCH
SWITCH MODULE LH
IGNITION SWITCH
MAGNETO
RR UNIT
CHASSIS GROUND
FUSE BOX
BATTERY 12V
BATTERY -VE
BATTERY +VE
RELAY STARTER
STARTER MOTOR
ENGINE GROUND
CHASSIS GND EYELET
MAIN TAIL
TAIL LAMP
LICENSE PLATE ILLUMINATOR
TAIL LIGHT HARNESS
FUSE DETAILS:
F1 – CHARGING FUSE – 30A (RR UNIT)
F2 – MAIN FUSE – 30A (ALL SUBSYSTEM FUSES AND LOADS)
F3 –
F4 –
F5 –
F6 – LIGHTING FUSE – 15A (HEADLAMP/SIDELIGHT/TAIL LAMP)
F7 –
F8 –
F9 –

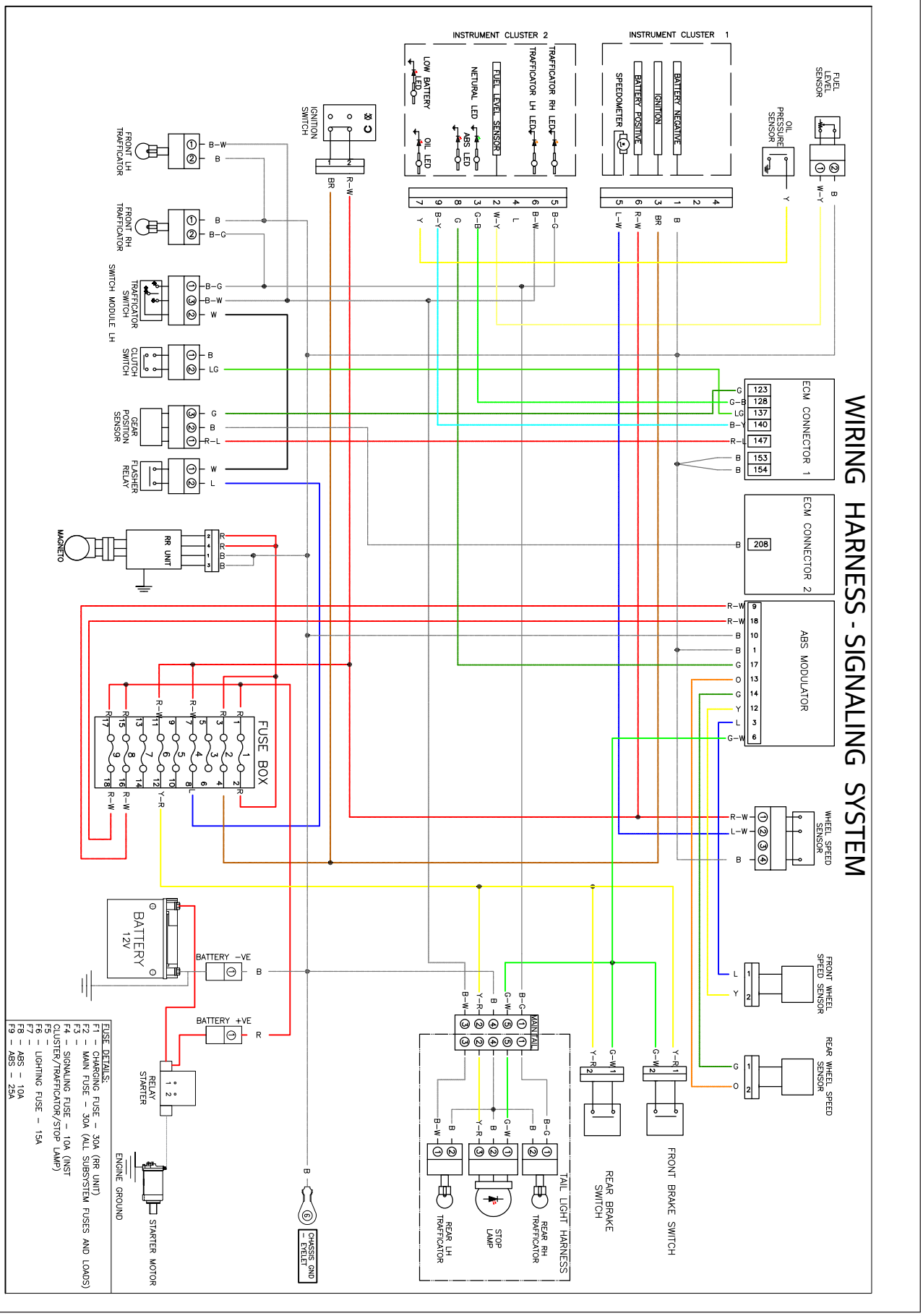
WIRING HARNESS - SIGNALING SYSTEM
INSTRUMENT CLUSTER 2
INSTRUMENT CLUSTER 1
LOW BATTERY LED
OIL LED
NETURAL LED
ABS LED
FUEL LEVEL SENSOR
TRAFFICATOR LH LED
TRAFFICATOR RH LED
SPEEDOMETER
BATTERY POSITIVE
IGNITION
BATTERY NEGATIVE
FUEL LEVEL SENSOR
OIL PRESSURE SENSOR
IGNITION SWITCH
FRONT LH TRAFFICATOR
FRONT RH TRAFFICATOR
TRAFFICATOR SWITCH
SWITCH MODULE LH
CLUTCH SWITCH
GEAR POSITION SENSOR
FLASHER RELAY
ECM CONNECTOR 1
ECM CONNECTOR 2
ABS MODULATOR
WHEEL SPEED SENSOR
FRONT WHEEL SPEED SENSOR
REAR WHEEL SPEED SENSOR
MAGNETO
RR UNIT
FUSE BOX
BATTERY 12V
BATTERY -VE
BATTERY +VE
RELAY STARTER
STARTER MOTOR
ENGINE GROUND
CHASSIS GND - EYELET
TAIL LIGHT HARNESS
REAR LH TRAFFICATOR
STOP LAMP
REAR RH TRAFFICATOR
REAR BRAKE SWITCH
FRONT BRAKE SWITCH
FUSE DETAILS:
F1 – CHARGING FUSE – 30A (RR UNIT)
F2 – MAIN FUSE – 30A (ALL SUBSYSTEM FUSES AND LOADS)
F4 – SIGNALING FUSE – 10A (INST CLUSTER/TRAFFICATOR/STOP LAMP)
F5 – F6 – LIGHTING FUSE – 15A
F7 – F8 – ABS – 10A
F9 – ABS – 25A

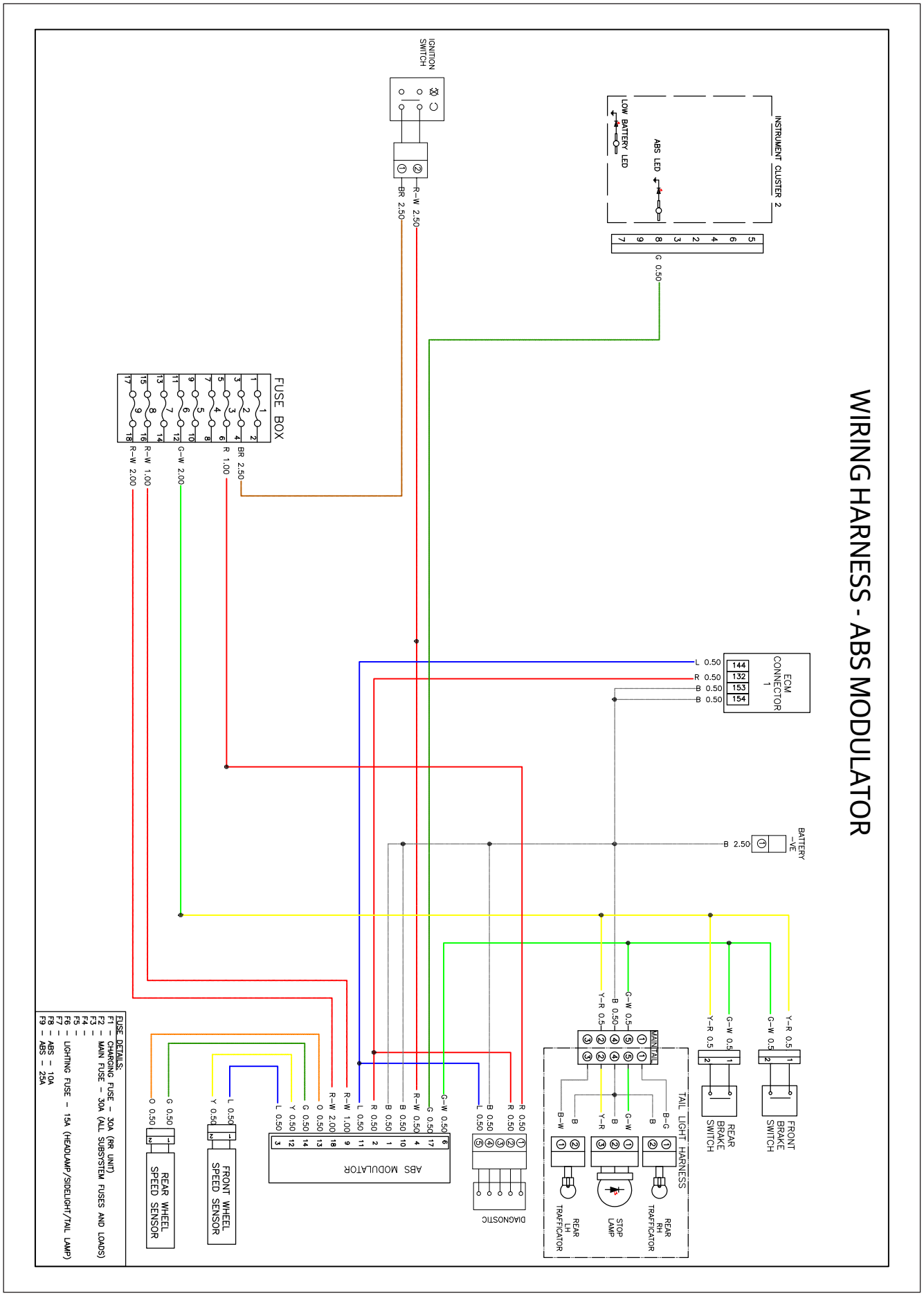
WIRING HARNESS - ABS MODULATOR
IGNITION SWITCH
INSTRUMENT CLUSTER 2
LOW BATTERY LED
ABS LED
FUSE BOX
ECM CONNECTOR 1
144
132
153
154
BATTERY -VE
ABS MODULATOR
DIAGNOSTIC
TAIL LIGHT HARNESS
MAINT.TAIL
REAR LH TRAFFICATOR
STOP LAMP
REAR RH TRAFFICATOR
REAR BRAKE SWITCH
FRONT BRAKE SWITCH
REAR WHEEL SPEED SENSOR
FRONT WHEEL SPEED SENSOR
FUSE DETAILS:
F1 – CHARGING FUSE – 30A (FR UNIT)
F2 – MAIN FUSE – 30A (ALL SUBSYSTEM FUSES AND LOADS)
F3 –
F4 –
F5 –
F6 – LIGHTING FUSE – 15A (HEADLAMP/SIDELIGHT/TAIL LAMP)
F7 –
F8 – ABS – 10A
F9 – ABS – 25A

INDEX

A

ABS toner wheel

Adjuster nut

Air cut valve (ACV)

Air Filter Box Assembly

Air Filter Element

B

Balancer Shaft

Battery

Bearing

Brake lamp switch

Brake pedal

Breather Hose

C

Camshaft

Center Stand

Chain adjusters

Chain drive sprocket

Clevis pin

Clutch

Clutch Cable

Clutch Cable

Clutch Cover

Connecting Rod

Control Cables

Countershaft

Cradle Assembly LH

Cradle Assembly RH

Crankshaft

Cylinder Barrel

Cylinder Head

Cylinder Head Cover

D

Drain Hose

Drain Plug

Drive chain

Drive chain

Driveshaft

E

E-clip

Engine

Engine Oil

Engine Troubleshooting

EVAP

Exhaust Pipes and Silencers

F

FD Sprocket

Footrests

Fork Assembly

Frame Adjuster

Front Brake Disc

Front Mudguard

Front Number Plate

Front Wheel

Fuel Filter

Fuel Float

Fuel Tank

G

Gear Position Indicator Sensor

Gear Shift Linkage

Grab Handle

H

Handlebar

Handlebar brace

Handlebar riser

Headlamp

Heel guard

I

IAT sensor

Idle Speed Controller (ISC)

Ignition switch

Injector

Inlet Manifold Rubber Flange

J

Journal Bearing

L

Lever Eyelet

LH Cylinder Rocker Carrier

Limiter pad

Lower Crankcase

Lubrication

M

Magneto Cover

Magneto Rotor

Manifold Absolute Pressure (MAP) Sensor

Master cylinder assembly

Mudflap

O

Oil Cooler Inlet and Outlet Pipes

Oil Filter

Oil Jet

Oil Pan

Oil Pressure Switch

Oil Pump

P

Piston

Piston Ring

R

Rear Brake Disc

Rear Mudguard

Rear Mudguard Infill Cover

Rear Number Plate

Rear view mirror

Rear Wheel

Reed Valves

RH Cylinder Rocker Carrier

Rider Seat

S

Saree Guard

Seat Assembly

Sensors

Shifter Drum

Shifter fork

Shifter Shaft

Shock absorber

Side Panels

Side Stand

Spark Plug

Spark Plug Suppressor Caps

Starter Motor

Steering Stem

Swing Arm

Switch module

T

Tappet Adjusters

Throttle Body

Throttle Cable

Throttle Position Sensor (TPS)

Throttle rotor housing

Timing Chain Tensioner

Toner wheel

Top Yoke - Continental GT

U

Upper Crankcase

V

Valve

W

Wheel hub

Wheel speed sensor assembly

Wheels

GLOSSARY

13.2 Glossary

Aggregates	Description
ACV	Air Cut Valve
ABS	Anti-lock braking system
B+	Battery positive
BDC	Bottom dead center
BRG	Bearing
°C	Celsius (Centigrade)
CAL	Calibration
CC	Cubic centimeters
Cm	Centimeters
CKP	Crankshaft position
DTC	Diagnostic trouble code
DOT	Department of Transportation
DMS	Dealer management system
ECM	Engine control module
ET	Engine temperature
ECU	Electronic Control Unit
EMS	Engine Management System
EFI	Electronic fuel injection
EVAP	Evaporative emissions
FI	Fuel injection
ft-lbs	Foot pounds
FD	Final Drive
gal	gallon

Aggregates	Description
GPS	Gear Position Sensor
HO2S	Heated oxygen sensor
hp	Horsepower
Hego	Heated Exhaut Gas Oxygen
HT cable	High tension cable
hr	Hour
IAC	Idle air control
IAT	Intake air temperature
IC	Instrument cluster
ID	Inside diameter
IGN	Ignition
in-lbs	Inch pounds
kg	Kilogram
km	Kilometer
km/h	Kilometers per hour
kW	Kilowatt
L	Litre
lbs	Pounds
LCD	Liquid crystal display
LH	Lefthand
MAP	Manifold absolute pressure
max	Maximum
mi	Miles

Aggregates	Description
min	Minimum
mm	Millimeter
mph	Miles per hour
Nm	Newton-meter
N/A	Not applicable
NRB	Needle Roller Bearing
O2	Oxygen
OD	Outside diameter
OEM	Original equipment manufacturer
P&A	Parts and Accessories
PAV	Pulse Air Valve
psi	Pounds per square inch
PWM signal	Pulse width modulated
qt	Quart
R	Resistence
RR	Regulator and Rectifier
RLY	Relay (Electrical)
RES	Reserve mark on fuel supply
RH	Righthand
RPM	Revolutions per minute
S	seconds
SPL	Special Tool

Aggregates	Description
SOHC	Single Over Head Cam
TB	Throttle Body
TDC	Top dead center
TWI	Tyre wear indicator
TPS	Throttle position sensor
TS	Turn signal
VAC	Volts of alternating current
VDC	Volts of direct current
VIN	Vehicle identification number
VSS	Vehicle speed sensor
W	Watt
WSS	Wheel speed sensor



ROYAL ENFIELD

Part No. 1040629/A

ROYALENFIELD.COM