INTERCEPTOR
BEAR 650

ROYAL ENFIELD SERVICE MANUAL

EURO V & REST OF THE WORLD - 2024

This page is intentionally left blank

Welcome to your all new Bear 650.

Born out of the simplicity and straight forwardness of the sixties desert racing scene, the Bear 650 symbolises a time when riders embraced the thrill of the ride and the rawness of nature.

In its aesthetic silhouette, are features tucked away to make your everyday adventure exciting. At the heart of the Bear is an air-oil cooled 650cc twin cylinder engine mated to a 6 speed gearbox delivering pure motorcycling pleasure. The USD forks, uncramped seating posture, dual purpose tyres and taller handlebars enable you to ride at ease.

As you ride, channel the spirit of those desert racers. Feel the adrenaline and a deep connection with the landscape. In an age where overthinking is common, let your scrambler remind you of the power of living in the moment and appreciating unfiltered experiences.

Enjoy the journey, trust your gut and send it!

"© Copyright 2024 Royal Enfield (A unit of Eicher Motors Ltd.). All rights reserved. No part of this service manual shall be copied, distributed or otherwise dealt without the express permision in written form the Royal Enfield who remains the sole owner of this manual."

EDITION - 26 OCT 2024

This page is intentionally left blank

TABLE OF CONTENTS

GENERAL INFORMATION 1

TECHNICAL SPECIFICATION 2

MAINTENANCE 3

GENERAL AND SPECIAL TOOLS 4

ENGINE 5

CHASSIS 6

FUEL SYSTEM 7

EVAPORATIVE EMISSION CONTROL SYSTEM (EVAP) 8

BRAKES AND ABS 9

ENGINE MANAGEMENT SYSTEM (EMS) 10

ELECTRICAL SYSTEM 11

INDEX AND GLOSSARY 12

CONTENTS **PAGE**

1. General Information 11

1.1 About this Manual 11

1.2 How to Use this Manual 12

1.3 Important Information 13

1.4 General Precautions 13

1.5 Prior to Service 14

2. Technical Specifications 24

2.1 Engine 24

2.2 Ignition System 24

2.3 Transmission 24

2.4 Chassis 25

2.5 Electrical System 25

2.6 Dimensions 26

2.7 Weights 26

2.8 Recommended Lubricants 26

3. Periodical Maintenance Schedule (PMS) 30

EMS Adaptation Procedure 33

4. General and Special Tools 34

4.1 General Tools 38

4.2 Measurement Tools 41

4.3 Special Tools 43

5. ENGINE 51

5.1 Components Removal from Engine 52

5.2 Components Assembly on Engine 82

5.3 Engine Removal from Main Frame 137

5.4 Engine Assembly to Frame 161

5.5 Engine Dismantling 200

5.6 Engine Inspection 238

CONTENTS **PAGE**

5.7 Journal Bearings Selection Chart 250

5.8 Engine Assembly 259

5.9 Engine Troubleshooting 323

6. CHASSIS 342

6.1 Air Filter Box Assembly 348

6.2 Control Cables 359

6.3 Handlebar 377

6.4. Exhaust Pipes and Silencers 392

6.5. Footrests/Stands/Saree Guard 406

6.6 Mudguards/Number Plates/Grab Handle 424

6.7 Side Panels and Rider Seat 436

6.8 Wheels 443

6.9 Suspension 476

7. Fuel System 526

7.1. Fuel System Components 529

8. Evaporative (EVAP) Emission Control System 540

8.1. Evaporative (EVAP) Emission Control System 541

9. Brakes and ABS 555

9.1. Brake - Front 555

9.2. Brake - Rear 559

9.3 Anti-lock Braking System (ABS) 579

9.4. Preparation (Front Disc Brake) 600

9.5. Reassembly 602

9.6. Preparation (Rear Disc Brake) 603

9.7. Reassembly 604

CONTENTS **PAGE**

9.8. Brake Bleeding 606

10. Engine Management System (EMS) 618

10.1 Engine Management System (EMS) 627

10.2 EMS DTC Codes 661

11. Electrical System 674

11.1 Headlamp and Cluster Dismantling 674

11.2 Tail Lamp Dismantling 679

11.3 Brake Lamp Connectors Dismantling 679

11.4 Trafficators Dismantling 680

11.5 Battery Dismantling 682

11.6 Horn Dismantling 685

11.7 Horn Assembly 687

11.8 Battery Assembly 687

11.9 Trafficators Assembly 690

11.10 Brake Lamp Connectors Assembly 692

11.11 Tail Lamp Assembly 693

11.12 Headlamp and Cluster Assembly 693

11.2 Wiring Diagrams 705

26. Index 915

GENERAL INFORMATION

CONTENTS PAGE

1.1 About this Manual 11

1.2 How to Use this Manual 12

1.3 Important Information 13

1.4 General Precautions 13

1.5 Prior to Service 14

1. General Information

1.1 About this Manual

This service manual has been created primarily for use by a technically competent and trained service personnel to

- Get familiarized and understand the construction of various aggregates of motorcycles.
- Assist in carrying out the correct and factory-approved service and overhauling procedures of the motorcycles.

While it is not possible to comprehensively capture all the service practices in thismanual, it is expected that the technically competent person would have a basic knowledge and understanding o f carrying out systematic service and overhauling procedures.

We strongly recommend that personnel without basic understanding of repair techniques and procedures DO NOT attempt to service or overhaul any part of the motorcycle using this manual, as it might result in wrong diagnosis and repair and ultimately render the motorcycle unsafe for use and result in expensive repair costs for the customer.

We also STRONGLY recommend that any technician who wishes to service Royal Enfield motorcycles, undergo systematic technical trainings at our Royal Enfield training academies, where the correct servicing and overhauling procedures are imparted by experienced and competent trainers, providing hands on practical sessions.

Lastly, we would recommend and insist that the periodic maintenance and overhauling of the Royal Enfield motorcycles be carried out ONLY through authorized Royal Enfield service stations where factory trained and experienced service technicians are always available

1.2 How to Use this Manual

This service manual is divided into several chapters as detailed below. This will help the technical personnel to easily refer to the particular section of interest, for carrying out the correct maintenance and repair procedure as recommended by Royal Enfield.

Chapter No.	Chapters
1	**General Information**
2	**Technical Specifications**
3	**Periodic Maintenance Schedule**
4	**General Tools and Special Tools**
5	**Engine**
6	**Chassis**
7	**Fuel System**
8	**EVAP (Evaporative Emission Control System)**
9	**Brakes and ABS (Anti-Lock Braking System)**
10	**EMS (Engine Management System)**
11	**Electrical System**
12	**Index and Glossary**

There are elaborate details of CAUTIONS, WARNINGS, NOTES provided in this service manual in each of the individual chapters to highlight details of information and/or precautions that need to be taken while servicing the motorcycle aggregates.

1.3 Important Information

To enhance customer satisfaction and to improve the performance of the motorcycle, Royal Enfield will be carrying out modifications and changes in the motorcycles in the years to come. Such changes will be intimated periodically and continuously through service bulletins and notifications to the authorized Royal Enfield dealers and service stations and will also be included in the future editions of this service manual.

1.4 General Precautions

Important information and points that need special focus and attention while servicing the motorcycles are highlighted in this service manual as follows:

NOTE	*IIndicates points of particular interest for more efficient and convenient operation.*
WARNING	**This warning symbol identifies special instructions or procedures which, if not correctly followed, could result in personal injury,or loss of life..**
CAUTION	**This caution symbol identifies special instructions or procedures which, if not strictly observed, could result in damage to the parts or vehicles.**

⚠ WARNING
Stop the engine when servicing the fuel system. Do not smoke or allow any open flame or sparks near gasoline. Gasoline is extremely flammable and highly explosive, which could result in serious injury or fatal accidents. **Certain non-standard parts such as aftermarket and custom made extended front forks or suspensions, which may adversely affect performance and handling. Removing or altering factory-installed parts can adversely affect performance and could result in serious injury or fatal accidents.**

⚠ CAUTION
Do not tamper or attempt any modifications to any part of the engine management, fuel injection, ABS brakes, exhaust and evaporative emission systems of the motorcycle as it is against the law and will render the motorcycle unfit and illegal for road use.

1.5 Prior to Service

Proper preparation is very important before commencing any maintenance or repair on a motorcycle. This will not only result in an efficient and accurate repair job but will also save time and result in "FIRST TIME RIGHT" and help the customer gain confidence in the technician's capability.

The following points are essential for carrying out maintenance or repairs on a motorcycle correctly:

1. **Understand and record customer concerns accurately.**
2. **Test-ride the motorcycle wherever required to understand the custo er concerns accurately.**
3. **Refer to the past history of maintenance and repairs carried out on the motorcycle.**
4. **Water-wash and clean the motorcycle.**
5. **Maintain the work area – cleanliness, lighting, ventilation, etc.**
6. **Store appropriate general purpose and special tools for carrying out the maintenance.**
7. **Perform systematic dismantling and reassembly of the aggregates in the motorcycle.**
8. **Store required spares and consumables for the maintenance.**
9. **Perform correct inspection and diagnosis of the motorcycle.**
10. **Test-ride after repairs to ensure that motorcycle is performing correctly.**
11. **Explain the repairs and maintenance wcarried out to the customer.**
12. **Encourage customer to take a test-ride so as to gain confidence that the repairs have been carried out correctly and to his satisfaction**

1.5.1. Customer Complaints

Discuss with customer to clearly understand their concerns and issues on the motorcycle. Create a job card detailing all the complaints mentioned.

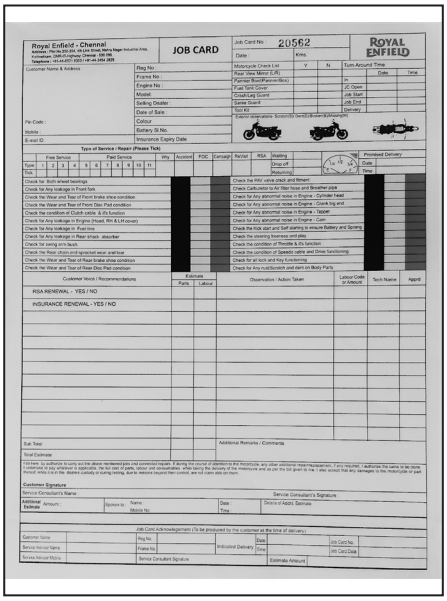

1.5.2. Test-Ride

Do a test ride wherever required to reconfirm issues mentioned by customer. This will also help to identify other issues if any.

1.5.3. Service Records

Check the service records.

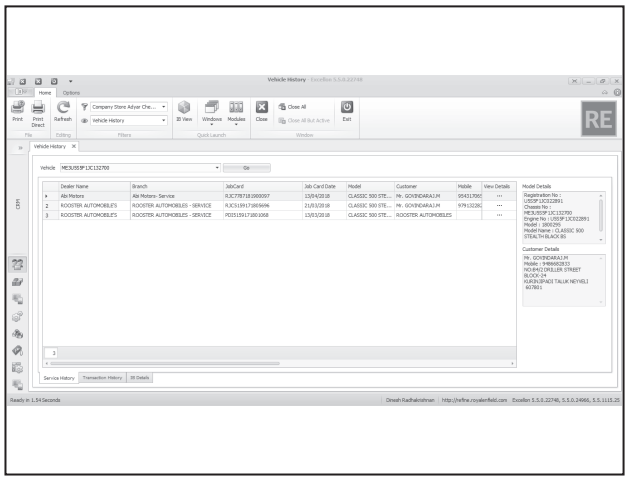

1.5.4. Clean Work Area

Ensure the work space is clean and adequately ventilated fresh air.

1.5.5. Cleaning

Cleaning before Dismantling and Inspection

Water-wash and clean the motorcycle for a thorough inspection to uncover any visual damages such as breakages, leaks, misalignments, etc., and to clearly understand the issues raised by the customer.

Clean the motorcycle thoroughly before disassembly to avoid dirt or other foreign materials entering into sealed areas as it can cause excessive wear and damage to the parts.

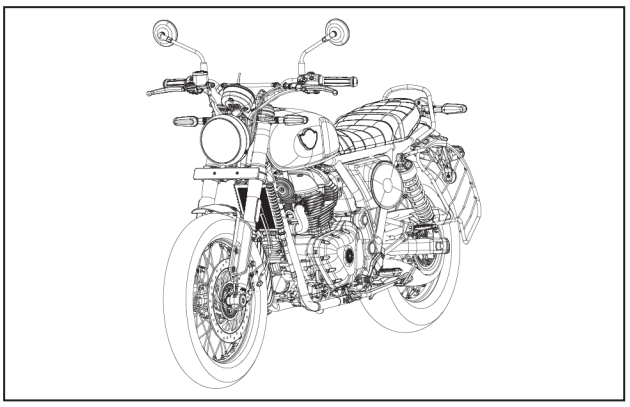

1.5.6. General and Special Tools

All general and special tools required for servicing are listed in the respective section of this service manual. Ensure that you have all the required tools for servicing. Place tools handy before beginning the service or maintenance.

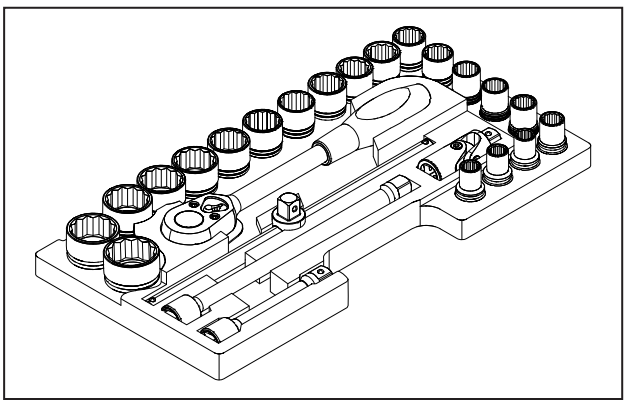

Special Tools

A list of special tools required for the dismantling and assembling of parts has been provided in each section.

Ensure that only Royal Enfield recommended special tools are used wherever mentioned. Dismantling or assembling without the use of special tools may cause severe, irreparable damage to parts.

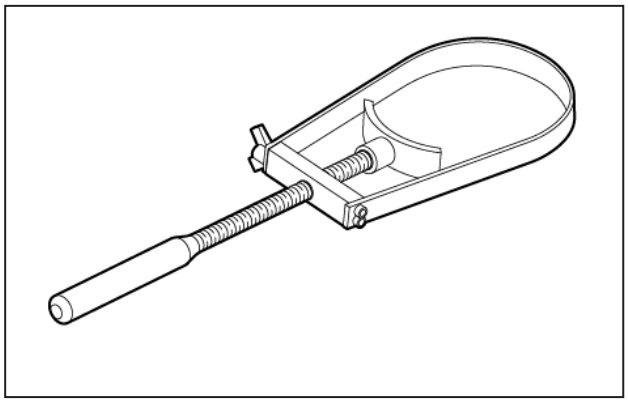

SPL 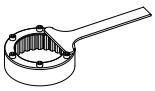	Part No: ST - 30266 -A
	Part Name: Clutch holder

Storing Tools

After completing the job, ensure that all tools are cleaned and kept back in their designated place, so that they do not rust and can be easily found the next time.

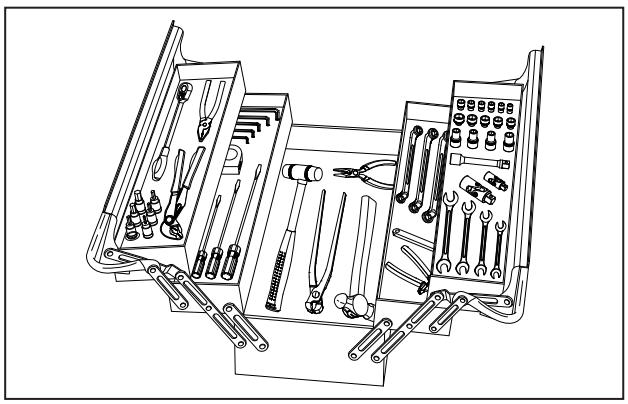

Tool Usage and Safety

Use eye protection equipment when performing any task using air-operated tools.

Pneumatic tools should be used only for removal, and not for tightening.

Ratchets and Extension

Use an extension on a ratchet's handle or power handle at suitable places.

Torque wrenches should always be used only for tightening fasteners to their recommended torque.

Once you hear the click sound, stop tightening and remove the torque wrench from the fastener. Do not tighten further as it will cause damage to torque wrench and fastener.

Hammers and Mallets

Use eye protection equipment and gloves while using a hammer.

Use a hammer or mallet that is suitable for the job.

Use only a plastic mallet to remove or assemble delicate parts like Oil seals/dowels/bushes, especially in the engine. DO NOT use a metal hammer as it will cause damage to the parts.

Screwdrivers

Use the right type and size of screwdriver at the right places.

Do not use a screwdriver for punching, chiseling or scraping, or as a lever to lift another object.

Use Ramp

Royal Enfield recommends the use of a suitable ramp to hold the motorcycle vertically in a convenient position for easy repairs.

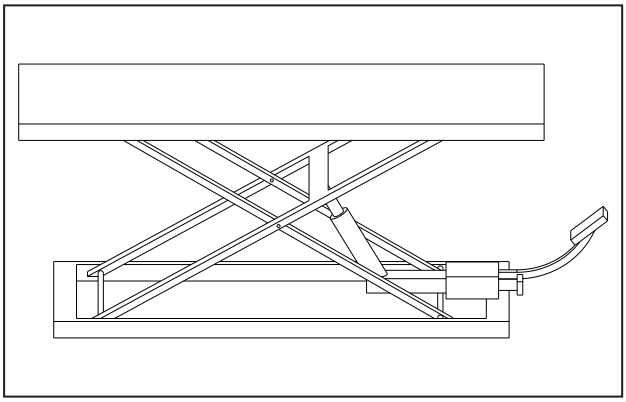

1.5.7. Prior to Disassembly

Always ensure ignition switch and stop switch are in OFF position before dismantling any aggregate on the motorcycle.

Always drain engine oil (in warm condition) whenever servicing any part of the engine/oil cooler.

Always drain fuel from the fuel tank whenever it is removed from the frame. Always disconnect battery terminals whenever servicing the engine management system, ABS and/or any electrical wiring.

1.5.8. Disassembly/Assembly Sequence

Follow the disassembling and assembling sequence as given in the respective sections of this manual. In most cases assembly order is the reverse of disassembly. However, pleasefollow the sequence provided in this service manual. If correct sequence is not followed, parts can be damaged.

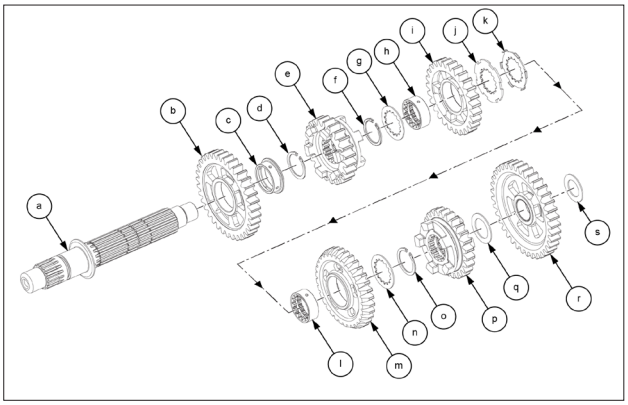

Removal of Bearings and Seals and fitting them in place

While removing bearings and seals, use correct tools mentioned in the relevant sections. Do not use excess force as it may damage parts. Similarly, while pressing bearings and seals in place lubricate them, use correct tools and visually examine if they are fitted in proper place. Bearings or seals should not be loose in the casing. Use of wrong tools, too much hammering or application of extra force may lead to damage of the bearings and seals.

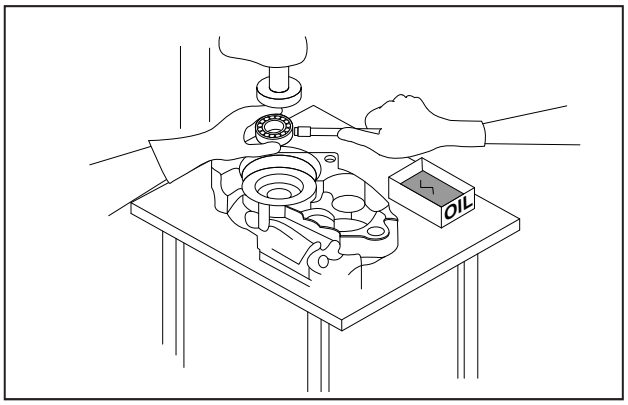

Lubrication

During assembly, ensure that all rotating and/or sliding parts are lubricated to minimize wear and tear during initial operation. Use Royal Enfield recommended oil and lubricants only. All brake system parts should be cleaned and lubricated with recommended brake fluid only (e.g., piston, master cylinder, etc.).

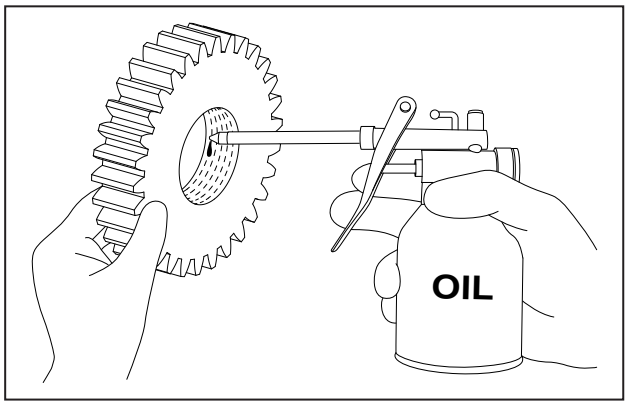

Tightening Sequence and Torque

The correct tightening sequence and torque has been provided in various sections of this service manual. Incorrect sequence or wrong torque will cause serious damage to parts.

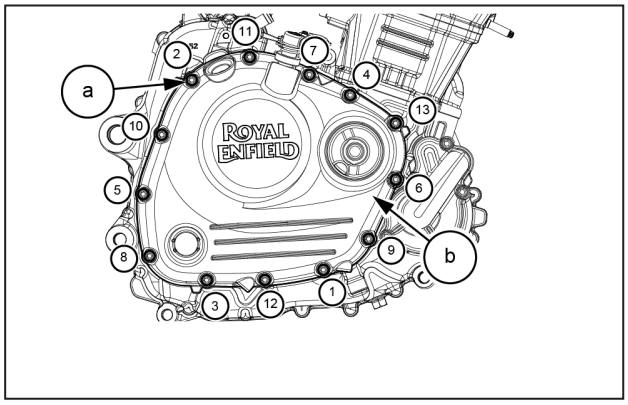

Battery Disconnection and Connection

When required, disconnect the battery cables from the battery. Disconnect the ground negative (−) terminal first and then positive (+) terminal to avoid short circuit. While connecting, first connect the positive (+) and then the negative (−) terminals.

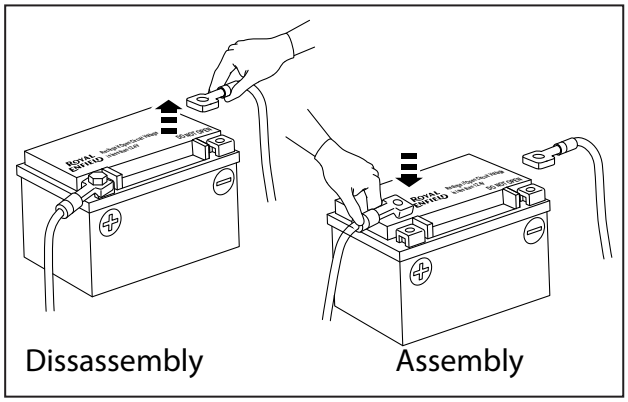

Electrical Connectors

Ensure that lock is released in the connectors before disconnecting or connecting electrical connectors. Excessive force to pull out connectors without releasing the lock may damage the connector.

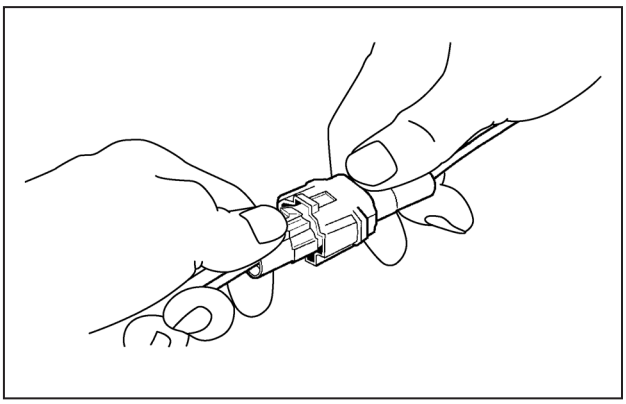

1.5.9. Safety

Ignition System

Ignition system produces high voltage. When working on any ignition system with the engine running, always keep your hands away from the spark plug wires.

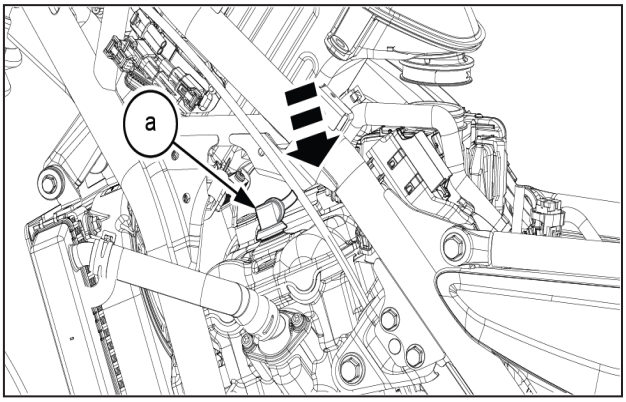

Handling Sharp-edged Parts

Wear hand gloves to prevent injury from possible sharp edges on the parts.

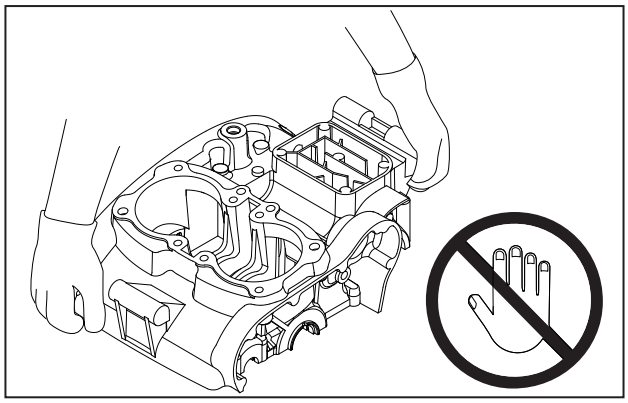

Handling Fragile Parts

Be careful while handling fragile parts like headlamps, indicators, bulbs, TFT clusters,etc. Use proper tools and do not apply undue force. After removing, store the parts in a safe place.

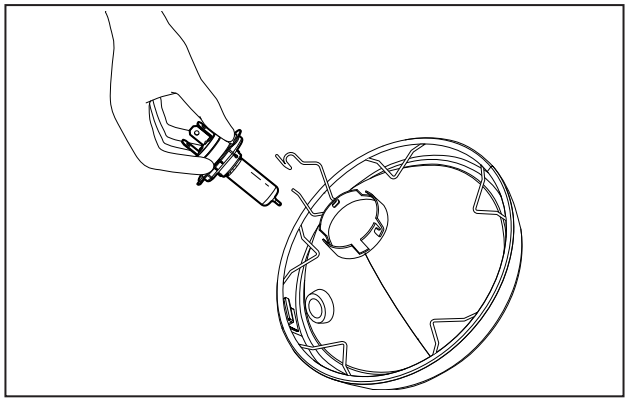

Welding

Royal Enfield does not recommend welding on the frame or any other parts of the motorcycle. Welding will make the frame weak and can also affect the balance of the motorcycle.

In motorcycles equipped with electronic control modules like EMS and ABS, welding will cause irreparable damage to the EMS/ABS system.

This will also void motorcycle warranty.

Tampering

It is illegal to tamper with the following:

a) Exhaust system

b) Fuel systems

c) Engine Number and/or VIN Information Plate

d) Wiring harness

e) Frame

This will lead to NON CONFORMANCE to the noise and emission regulations inforce, causing serious performance issues besides irreparable damage to the motorcycle.

This will also void warranty of the motorcycle.

1.5.10. Storage of Removed Parts

After disassembly of all parts including sub-assemblies, clean and store them in a separate storage bin to prevent from dust and place the parts near the working area.

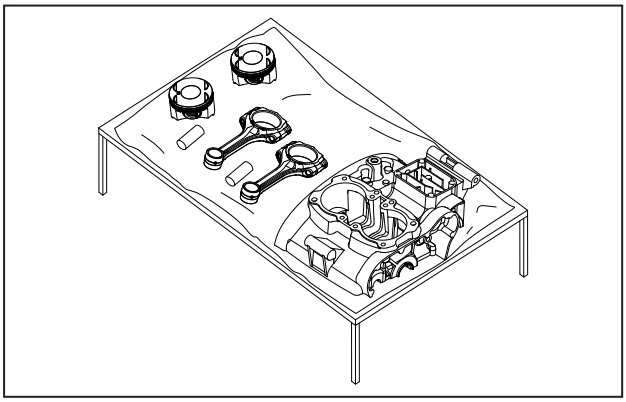

Protective Covers

Use proper covers on the motorcycle to avoid scratching/damaging paint during service.

⚠ CAUTION
Please Take care while disassembling and assembling the seats, and sheet metal parts, as any sharp edges will lead to injuries.

1.5.11. Inspection

Reuse of worn or damaged parts may lead to serious malfunction and/or unsafe operation of the motorcycle. All removed parts should be cleaned and visually inspected for wearout,

corrosion, discoloration, damage, etc. Refer to the appropriate sections of this manualfor service limits on individual parts. If any wear or tear has been found or if the part is beyond its service limit, replace the parts with Royal Enfield Genuine parts.

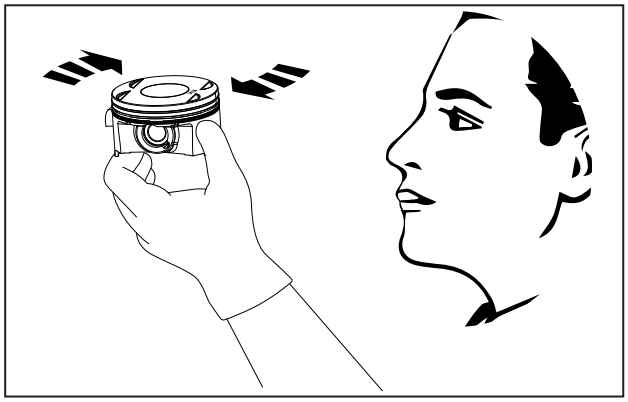

1.5.12. General

One-time Parts/Consumables

In the service manual, we have listed parts that are for one-time use only. Replace and do not reuse parts such as:

a) Oil seals
b) Filters
c) Gaskets
d) Rubber washers
e) Cylinder head bolts
f) Connecting rod bolts
g) Crankcase bolts
h) O - Rings

Spares/Lubricants/Consumables

Ensure that you have all the spares/lubricants/ consumables required for the servicing of a particular section stored near you for easy access. Use only Royal Enfield Genuine parts.

ROYAL ENFIELD

Genuine Parts

Rust or Corrosion Removal

In case a rusted or corroded part cannot be removed, apply recommended/reputed rust removal agents, wait for the removal agent to free up the rust/ corrosion and then remove the part. Clean and inspect the part carefully to confirm it can be reused.

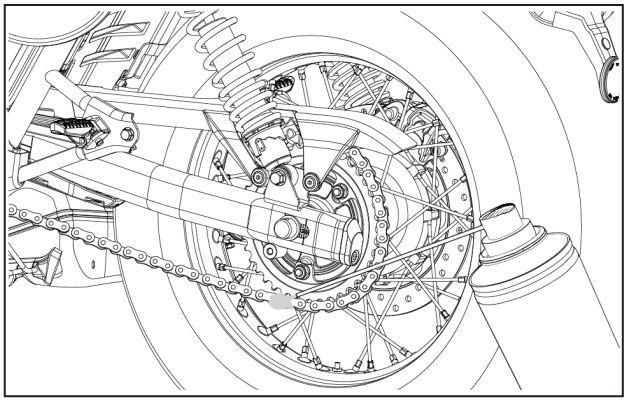

Solvents/Oils for Cleaning

Use correct solvents for cleaning to reduce fire hazards.

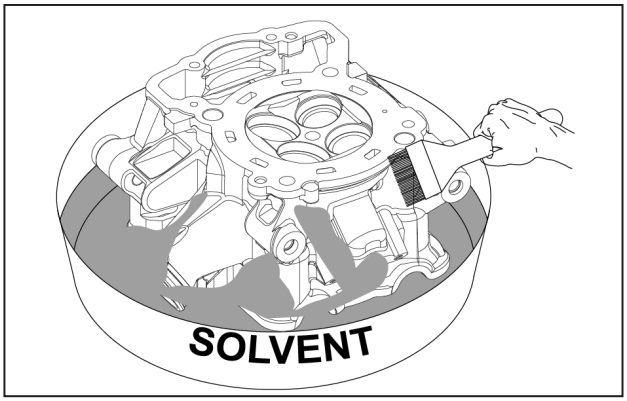

Hazardous Substances

Many liquids and other substances like fuel, lubricants, brake oil, adhesives, etc., used in automobiles are poisonous. Keep the fluids out of reach of children. Do not bring in contact with eyes and skin. Wash exposed skin thoroughly with soap and water. If any irritation persists, consult a doctor immediately.

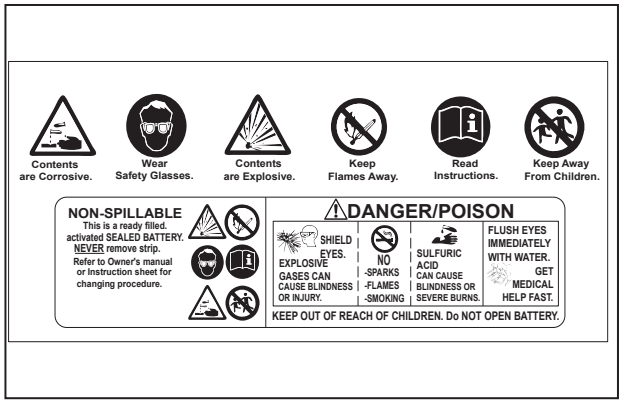

Environmental Protection

Dispose used oil and other consumables like gaskets, O-rings, oil filters through authorized waste-disposal agencies.

Do not spill brake oil on painted parts. It will damage the paint.

Do not use mineral-based grease in brake parts as it will damage the hydraulic seals.

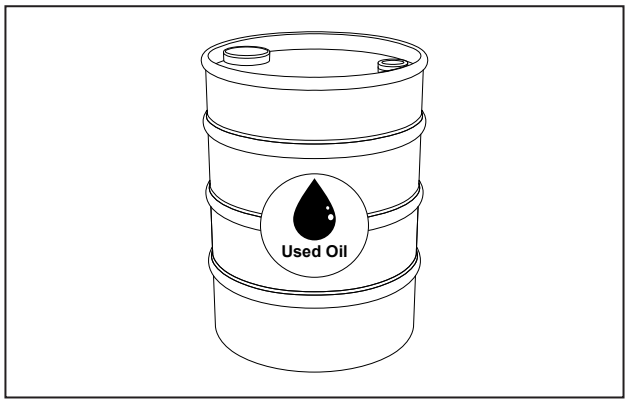

Battery Acid

Avoid spilling battery acid on any part of the motorcycle or your body. Wash spillage immediately with water to avoid acid marks on the motorcycle or burns/injury to yourself.

Gasoline/Petrol

Gasoline/Petrol is highly flammable. Be careful while removing the fuel tank and handling Gasoline/Petrol. Store it in a safe place and ensure it is stored in a well ventilated area, away from the work area and fire.

After-market Parts and Accessories

Royal Enfield strongly recommends use of Royal Enfield genuine parts and accessories only.

A list of all accessories available from Royal Enfield can be obtained from Royal Enfield dealers.

Yet, if you are using any after-market part that is not supplied by Royal Enfield, do ensure that it does not interfere with the functioning of any of the motorcycle parts.

Gasket and O-ring

If the gaskets and O-rings are hardened, shrunk or damaged after disassembly, their sealing performance will be reduced.

Remove used gaskets and O-rings. Clean the sealing surfaces thoroughly. Make sure no gasket or other material waste remains on the surface.

Always replace recommended gaskets and O-rings with Royal Enfield genuine parts once they are removed.

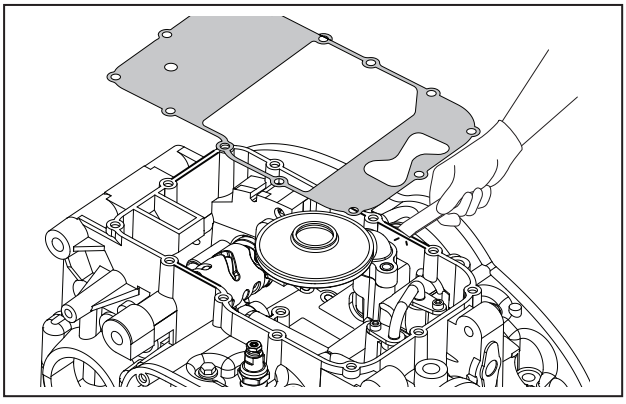

1.5.13. Final Inspection

Once the repairs/servicing is done, check and confirm that all tasks mentioned on the job card have been performed. Do a proper testing to ensure that all critical functions are working properly, all reported issues have been resolved and no new problem has been introduced.

Follow the final inspection checklist and sign out through the final inspector.

1.5.14. Delivery to the Customer

Ensure that the customer is informed about all the repairs that have been carried out. Also let he/she know about the parts that have been replaced and consumed during the repairs. Demonstrate to the customer that all his/her reported issues have been resolved. Insist on a test ride if required.

Please preserve the parts. Show it to the customer and dispose it with the customer's permission.

TECHNICAL SPECIFICATIONS

CONTENTS PAGE

2. Technical Specifications 24

2.1 Engine 24

2.2 Ignition System 24

2.3 Transmission 24

2.4 Chassis 25

2.5 Electrical System 25

2.6 Dimensions 26

2.7 Weights 26

2.8 Recommended Lubricants 26

2. Technical Specifications

2.1 Engine	
Engine Type	**Inline twin cylinder, 4 stroke, SOHC**
Bore	**78 mm**
Stroke	**67.8 mm**
Swept Volume	**647.95 cc**
Compression Ratio	**9.5:1**
Max Power	**34.9 kW (47.4 PS) @ 7150 rpm**
Max Torque	**56.3 Nm @ 5150 rpm**
Idle RPM	**1200 +/- 100 rpm**
Starting	**Electric Start**
Air Filter Element	**Paper element**
Lubrication	**Forced lubrication, Wet sump with pump driven oil delivery**
Cooling	**Air cooling**

2.2 Ignition System	
Ignition	**Digital Spark ignition**
Spark Plug	**BOSCH UR5CC**
Spark Plug Gap	**0.7 mm to 0.8 mm**

2.3 Transmission	
Clutch	**Wet multi plate**
Primary Drive	**Gear**
Primary Ratio	**2.051:1**
Gear Box	**6 Speed Constant Mesh**
Gear Ratio	**1. 2.615 :1** **2. 1.813:1** **3. 1.429:1** **4. 1.190:1** **5. 1.040:1** **6. 0.962:1**
Secondary Drive	**Sprockets and Chain (5/8 Pitch)**
Secondary Ratio	**2.667:1**

2.4 Chassis

Frame	**Steel tubular, double cradle frame**	
Suspension	**Front**	**Upside down telescopic fork 43 mm, Front wheel travel 130 mm**
	Rear	**Twin shock, Rear wheel travel 115 mm**
Brakes	**Brake System**	**Switchable**
	Front	**320 mm disc, ABS**
	Rear	**270 mm disc, ABS**
	ABS	**BOSCH 10.3**
Type of wheel	**Tyre Size**	
	Front Tyre	**100/90-19 M/C 57H MRF NYLOREX-F**
	Rear Tyre	**140/80R17 M/C 69H MRF NYLOREX-X**
Replacement tyre: Replace with standard or with below mentioned tyre	**Front Tyre**	**Make, Type: Pirelli Scorpion Rally STR Size: 100/90-19 M/C 57V**
	Rear Tyre	**Make, Pirelli Scorpion Rally STR Size: 140/80R17 M/C 69V**

Tyre Pressure	**Type of wheel**	**Solo**	**With Pillion**
	Front	**32 psi**	**32 psi**
	Rear	**36 psi**	**42 psi**
Steering Lock	**Integrated with ignition lock**		
Fuel Type	**Unleaded gasoline (for USA&ROW); E5/E10 unleaded gasoline (for EURO V)**		
Induction	**Fuel Injected**		
Fuel Tank Capacity	**13.7* Liters**		
Low Fuel Warning	**3.0* Liters**		
Dead Stock	**0.65* Liters**		
***The above values are approximate and the actual fuel filling capacity will vary from the values mentioned.**			

2.5 Electrical System

System	**12 V - DC**	
Generation	**Alternator**	
Alternator Output	**156 W @ 1100 RPM**	
Battery	**12 V - 12 Ah VRLA**	
Headlamp	**FPL 1.55 W LED, low beam 12.1 W, high beam + low beam 14.2 W, low beam + high beam + FPL 15.7 W**	
Tail lamp	**13.5 V, 0.5 W**	
Brake lamp	**13.5 V, 4.8 W**	
License plate illuminator	**12 V, 2.5 W (2 LED'S)**	
Turn signal	**Front**	**13.5 V, 3.5 W x 1 no (LED)**
	Rear	**13.5 V, 3.5 W x 1 no (LED)**
Hazard warning	**Front**	**13.5 V, 3.5 W x 2 nos (LED)**
	Rear	**13.5 V, 3.5 W x 2 nos (LED)**
Instrument cluster	**Colour TFT (Thin Film Transistor)**	
Horn	**12 V/2.5 A (Dual tone)**	
Starter motor	**12V, 0.8 kW**	
Charger port	**USB 2.0 Type C 5 V 2 A output**	

2.6 Dimensions

Rake	**24˚ (degrees)**
Front Wheel Rim	**19 M/C x MT 2.50**
Rear Wheel Rim	**17 M/C x MT 3.50**
Length	**2180 mm (for USA); 2216 mm (for EURO V&ROW)**
Width	**855 mm**
Height	**1160 mm**
Wheel base	**1460 mm**
Ground Clearance	**184 mm**

2.7 Weights

Kerb weight (90% fuel & Oil)	**216 Kgs (for USA); 214 Kgs (for EURO V&ROW)**
Gross vehicle weight	**400 Kgs**

- Values/Dimensions given above are for your guidance only.
- In view of continuous improvements being done on our products, the specifications could change without prior notice.

2.8 Recommended Lubricants

Engine Oil	Grade	**10W-50 to API SL (or higher) JASO MA2, such as ELF MOTO4 TECH 10W 50 (Fully synthetic)**	
	Capacity	**1st Dry fill**	**3.9 Liters**
		Refill	**3.1 Liters**
Front Fork Oil	Grade	**SS-47G**	
	Capacity	**RH Fork: 587 ± 2.5 ml LH Fork: 590 ± 2.5 ml**	
Brake Fluid	Grade	**DOT 4***	
	Capacity	**Front 50 ml Rear 100 ml**	

⚠ CAUTION

Use of wrong grade oil will reduce the life of the moving parts and seriously affect performance.

*** Do not mix DOT 4 or other brake fluid together.**

NOTE

- *Recommendation is subject to change without notice.*
- *The above values are approximate and the actual capacity will vary.*

Engine Oil Lubrication Flow

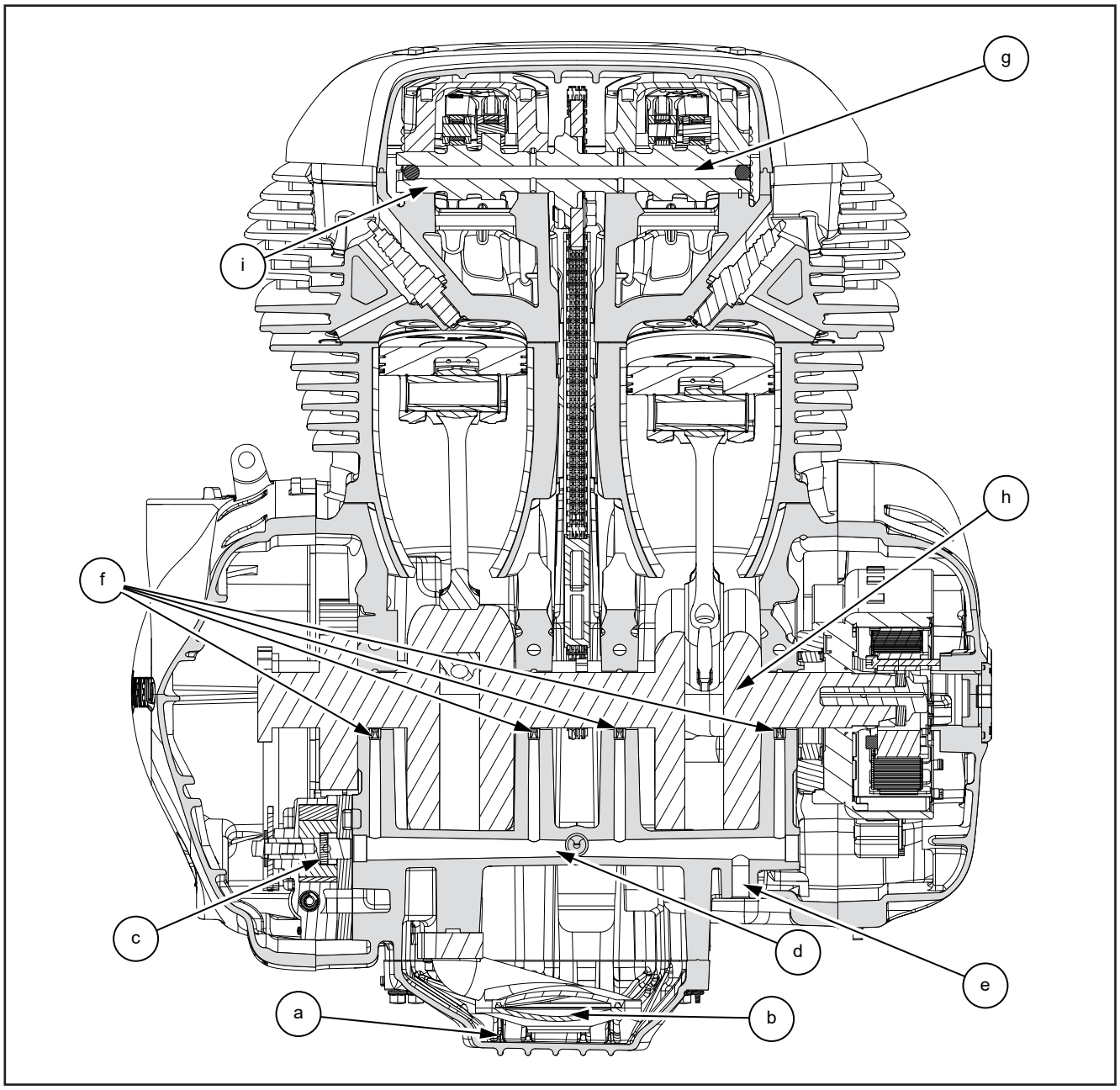

Item No.	Description	Quantity
a	Oil Sump	1
b	Oil Strainer	1
c	Oil Pump	1
d	Crank Shaft Oil Passage	-
e	Oil Pressure Switch Passage	1
f	Oil Jets (Crankcase Lower)	4
g	Camshaft Oil Passage	1
h	Crankshaft	1
i	Camshaft	1

Engine Oil Lubrication Flow

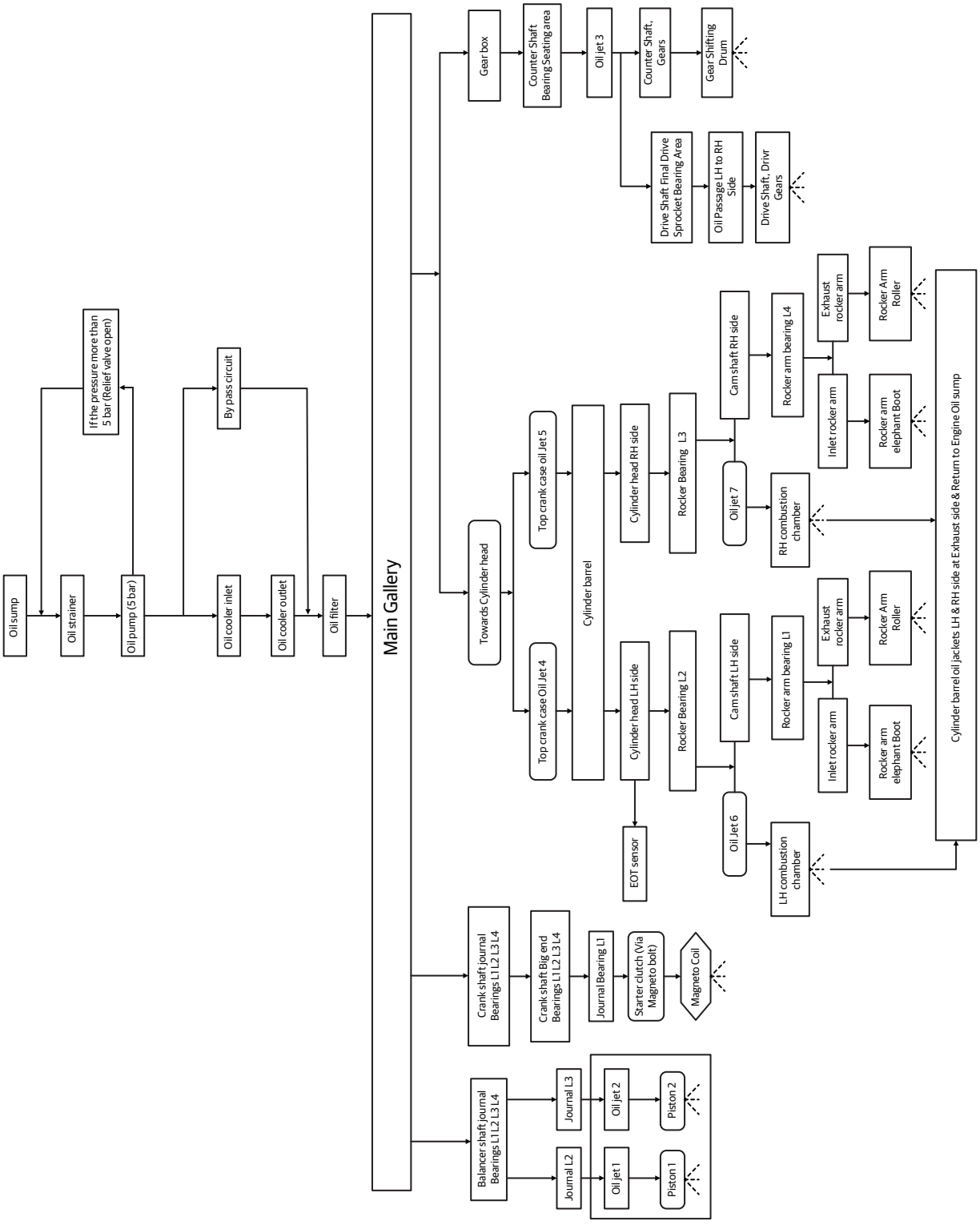

Oil Pan - Main Oil Gallery

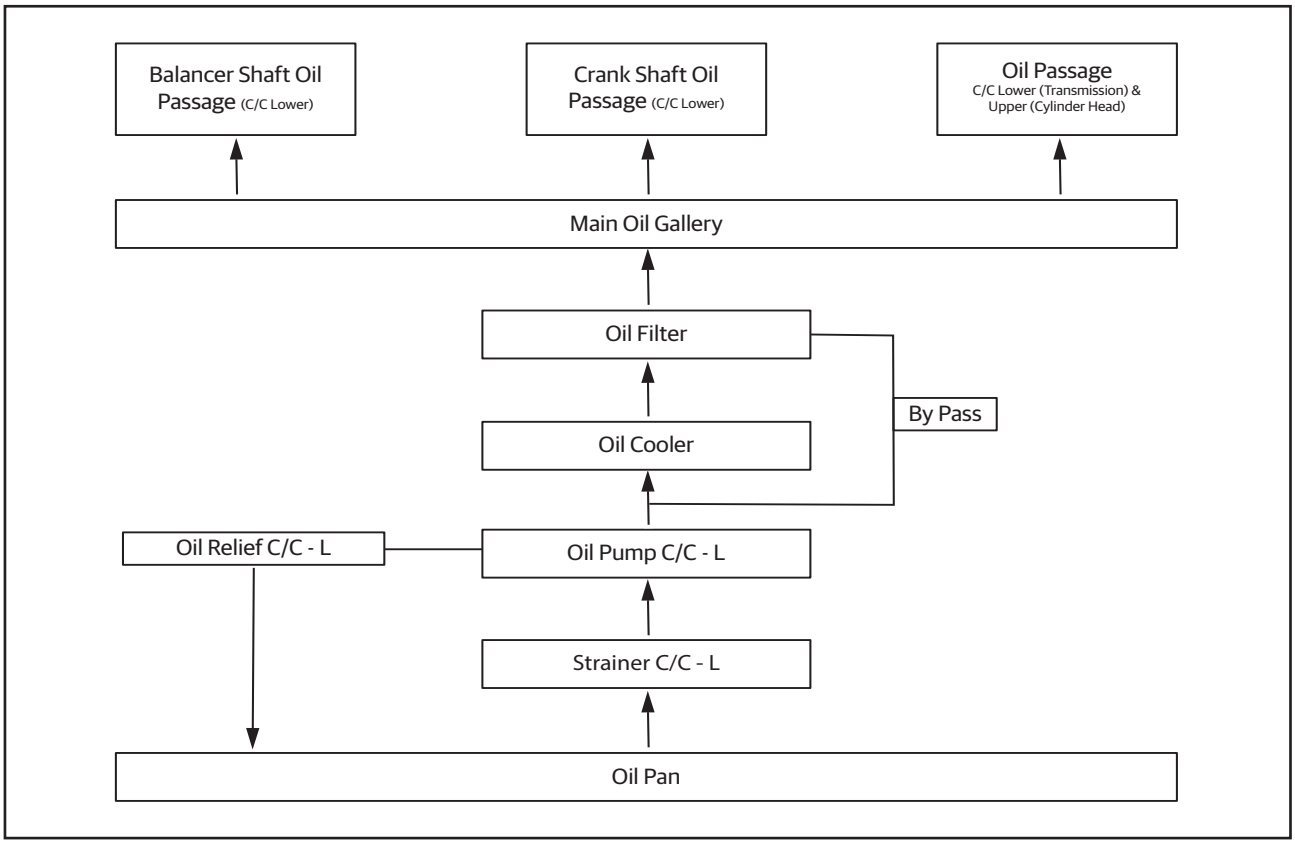

Balancer Oil Passage

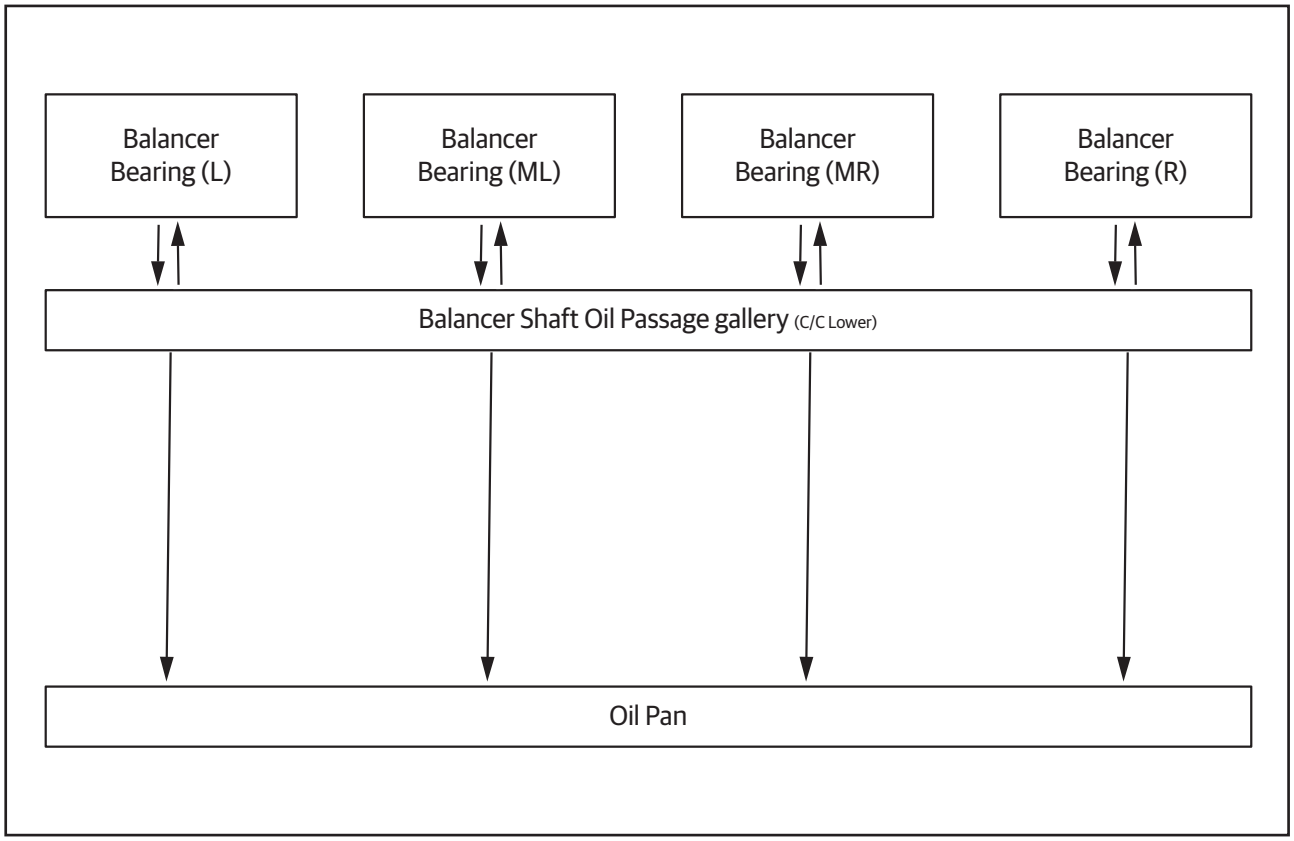

Crankshaft Oil Passage

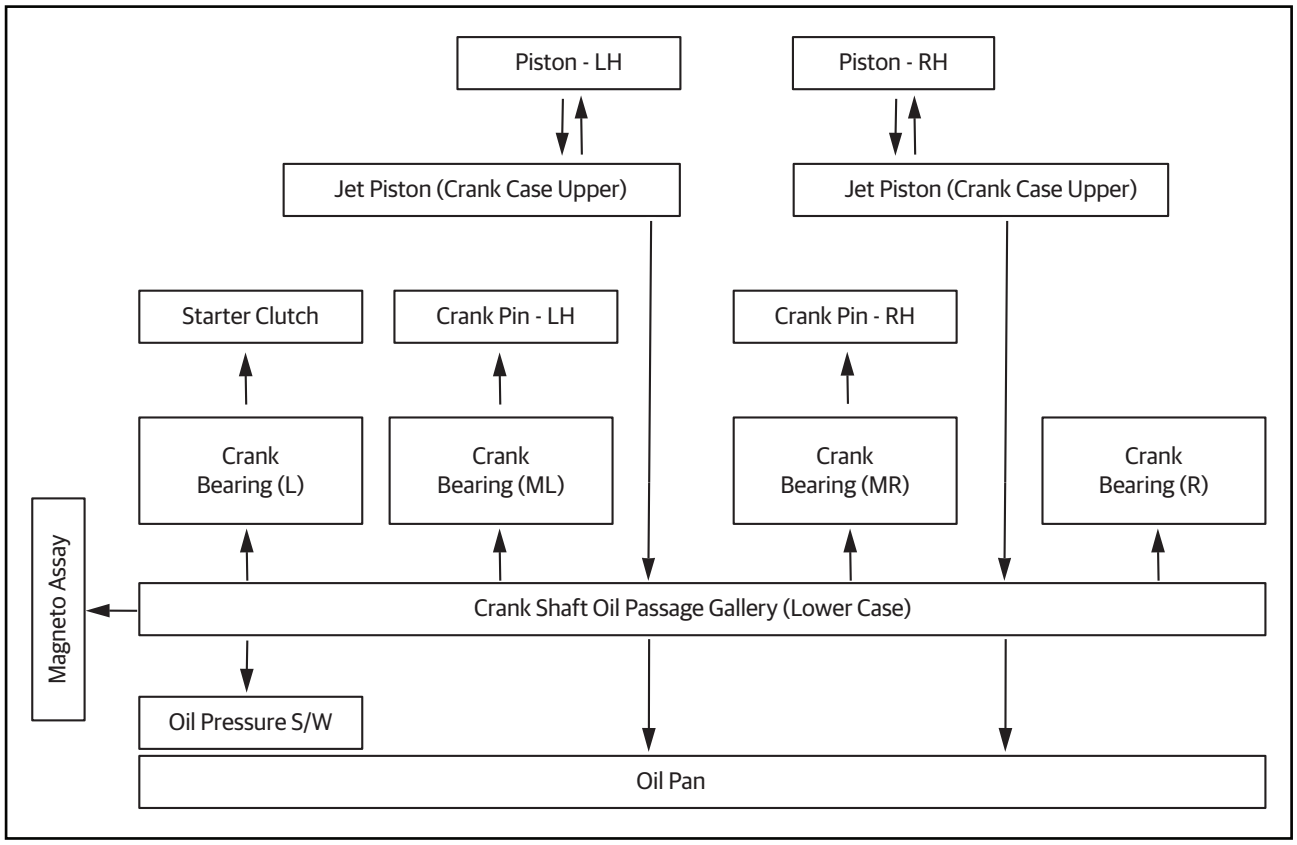

Crankshaft Comp & Connecting rod Piston Assy

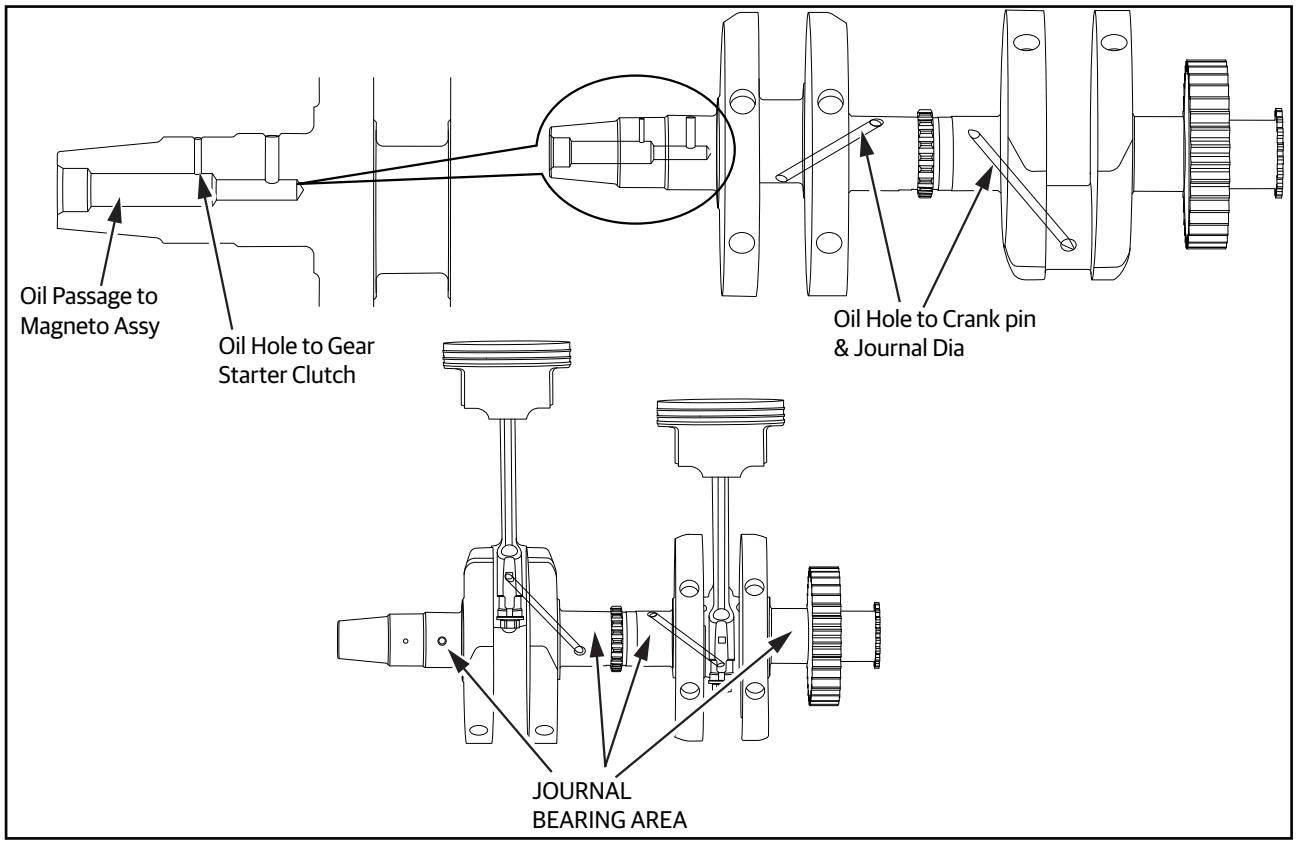

Oil Passage Crankcase Lower To Upper Cylinder

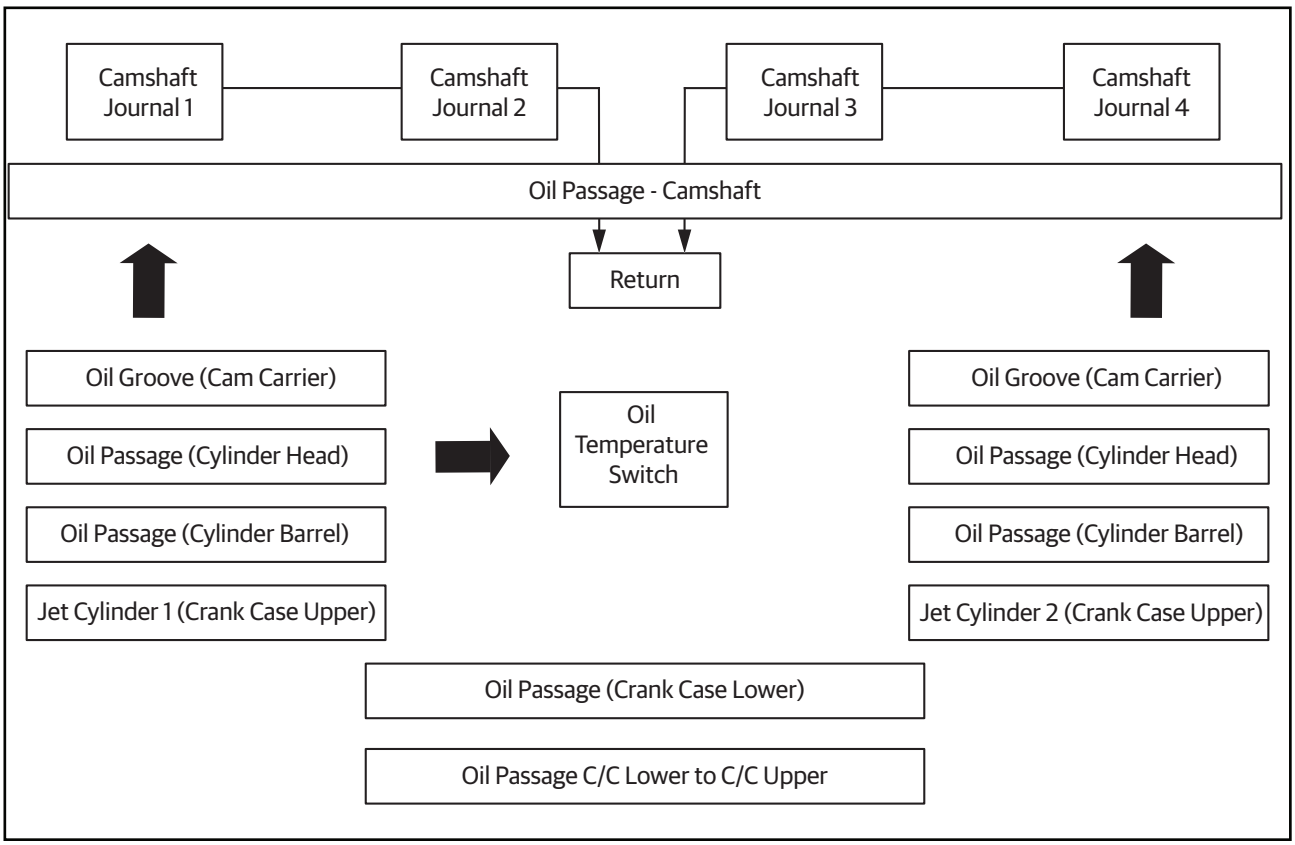

Oil Passage Crankcase Lower Transmission

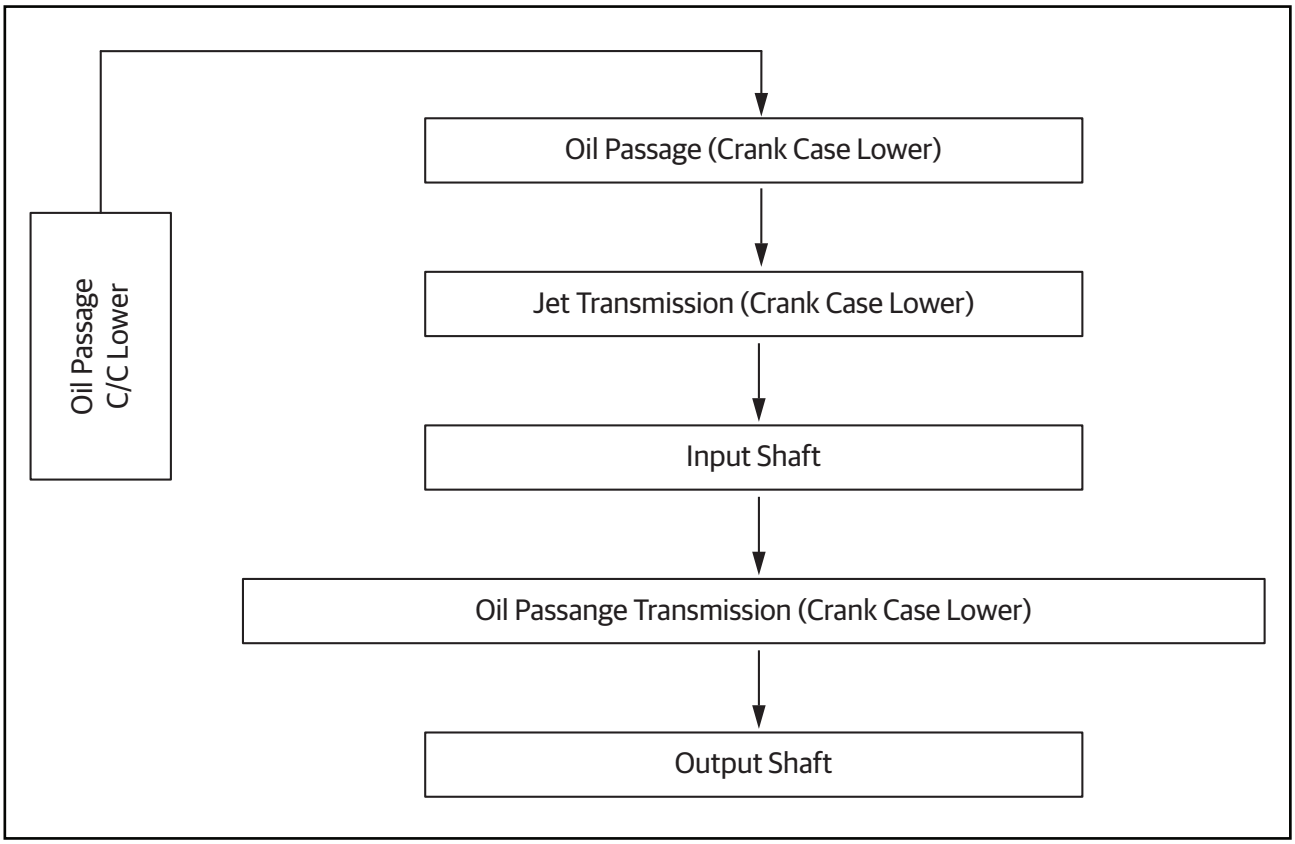

Oil Passage Cam, Rocker And Valve

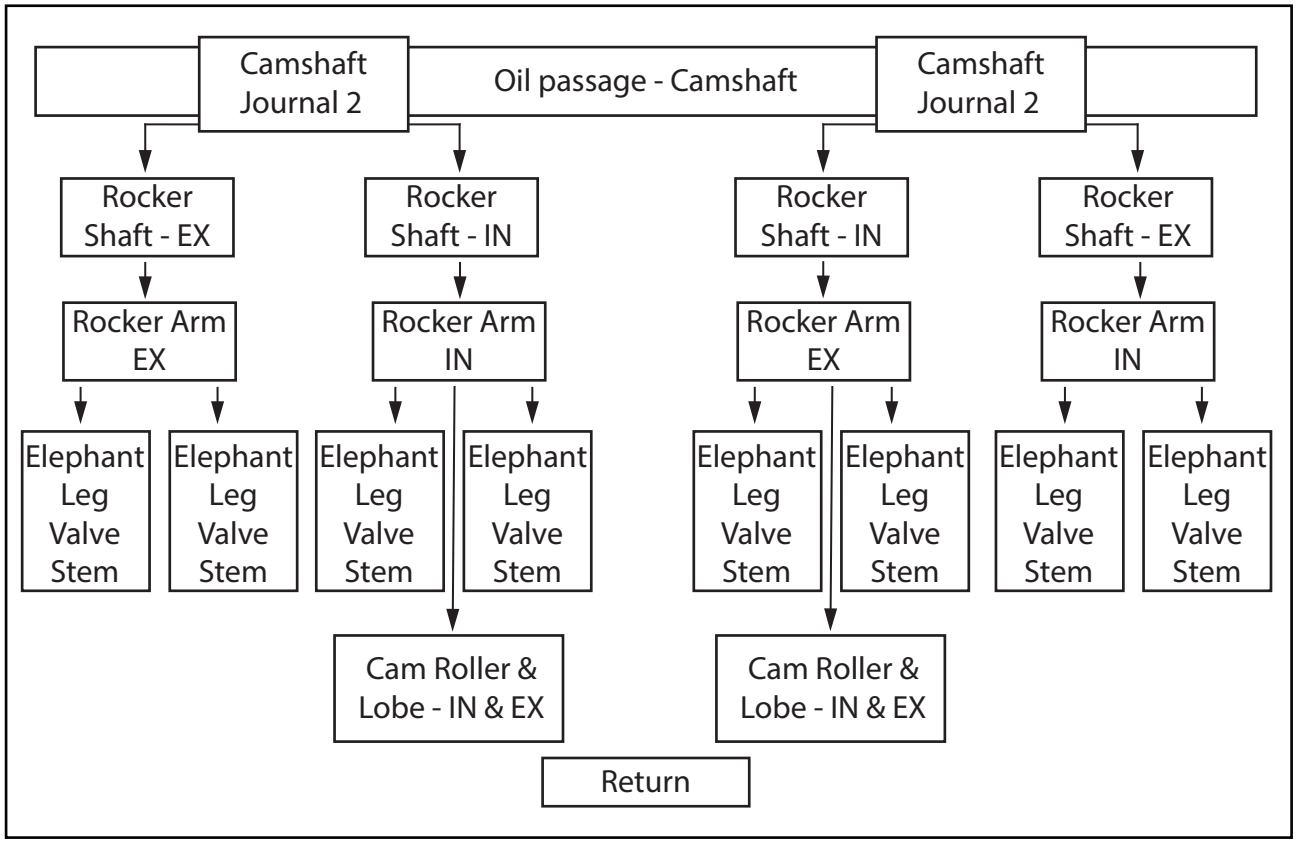

PERIODIC MAINTENANCE SCHEDULE (PMS)

APPLICABLE MARKETS: EUROPE,

UK AND NORTH AMERICA

3. Periodical Maintenance Schedule (PMS)

The maintenance schedule detailed here will help you to maintain your Interceptor Bear 650 motorcycle meticulously to get along trouble free service. The schedule provided herein is based upon an average riding conditions and indicates the km at which regular inspections, adjustments, replacements and lubrications are to be carried out. The frequency of the maintenance must be shortened depending upon the severity of the driving condition or if the motorcycle is used in a very dust environment. Contact the nearest Royal Enfield Authorised Service Centre for expert advice and to carry out the required maintenance.

Sl. No.	Description	PERIODICAL MAINTENANCE (Whichever is earlier)																
		Euro V						USA										
	km (x 1000)	0.5	7.5	15	22.5	30	37.5	0.5	5	10	15	20	25	30	35	40	45	
	Miles (x 1000)	0.3	4.7	9.3	14	18.6	23	0.3	3	6	9	12	15	18	21	24	27	
	Months	1.5	12	24	36	48	60	1.5	6	12	18	24	30	36	42	48	54	
1	Engine oil (#)	R	R	R	R	R	R	R		R		R		R		R		R
		Check level at every 1000 km or earlier and top up as required																
2	Engine oil filter element (#)	R	R	R	R	R	R	R		R		R		R		R		R
3	Inlet and Exhaust valve clearance(**)		I	I	I	I	I			I		I		I		I		I
4	Spark plug	I	I	R	I	R	I	I	I	I	I	R	I	I	I	R	I	I
5	HT lead	I	I	I	I	I	I	I	I	I	I	I	I	I	I	I	I	I
6	Rubber hose, Air filter to throttle body	I	I	I	I	I	I	I	I	I	I	I	I	I	I	I	I	I
7	Rubber hose, Inlet manifold/Adapter	I	I	I	I	I	I	I	I	I	I	I	I	I	I	I	I	I
8	Evaporative Emission Equipment rubber hoses	I	I	I	I	I	I	I	I	I	I	I	I	I	I	I	I	I
9	Fuel filter - External			R		R						R				R		
10	Air filter element	C	R	R	R	R	R	C	C	R	C	R	C	R	C	R	C	R
		Clean/replace more frequently if operated in dusty condition																
11	Vent Pipe under air filter box	I	I	I	I	I	I	I	I	I	I	I	I	I	I	I	I	I
12	Accelerator and Throttle pulley cables free play	A	A	A	A	A	A	A	A	A	A	A	A	A	A	A	A	A
13	Clutch Cable / lever free play	Adjust every 1000 kms or earlier as required																
14	Hand levers pivot point	Lubricate every 1000 kms or earlier as required																
15	Brake pads - Front and Rear	I	I	I	I	I	I	I	I	I	I	I	I	I	I	I	I	I

Sl. No.	Description	PERIODICAL MAINTENANCE (Whichever is earlier)																
		Euro V						USA										
	km (x 1000)	0.5	7.5	15	22.5	30	37.5	0.5	5	10	15	20	25	30	35	40	45	
	Miles (x 1000)	0.3	4.7	9.3	14	18.6	23	0.3	3	6	9	12	15	18	21	24	27	
	Months	1.5	12	24	36	48	60	1.5	6	12	18	24	30	36	42	48	54	
16	Disc Brake fluid level - Front and Rear	I	I	R	I	R	I	I	I	I	I	R	I	I	I	R	I	I
17	Rear brake pedal and Gear change pedal pivot	L	L	L	L	L	L	L	L	L	L	L	L	L	L	L	L	L
18	Brake hose and Banjo Bolt - Front and Rear	I	I	I	I	I	I	I	I	I	I	I	I	I	I	I	I	I
19	Headstock bearings	I	I	I	I	I	I	I	I	I	I	I	I	I	I	I	I	I
20	Rear Wheel Drive Chain	Lubricate and Adjust every 1000 kms / Clean, Lubricate and Adjust every service or earlier as required																
21	Rear Wheel Cush rubbers			I		I					I				I			
22	Spokes tightness / Wheel rim run out Front and Rear (It is applicable for spokes wheel model)	I	I	I	I	I	I	I	I	I	I	I	I	I	I	I	I	I
23	Battery terminals (apply petroleum jelly)	I	I	I	I	I	I	I	I	I	I	I	I	I	I	I	I	I
24	Earth wire eyelet tightness		I	I	I	I	I			I		I		I		I		I
25	Tyre wear pattern Front and Rear	I	I	I	I	I	I	I	I	I	I	I	I	I	I	I	I	I
26	Pivot - Side Stand	L	L	L	L	L	L	L	L	L	L	L	L	L	L	L	L	L
27	Rider and Pillion Foot rest pivot	L	L	L	L	L	L	L	L	L	L	L	L	L	L	L	L	L
28	All mounting fasteners in vehicle for tightness**	I	I	I	I	I	I	I	I	I	I	I	I	I	I	I	I	I

NOTE

EURO V

- *For maintenance after 37,500 km, please repeat the same frequency specified above, in consultation with a Royal Enfield Authorised Dealer / Service Centre.*

USA

- *For maintenance after 50,000 km, please repeat the same frequency specified above, in consultation with a Royal Enfield Authorised Dealer / Service Centre.*

- *A : Adjust C : Clean I : Inspect (Clean, Adjust, Lubricate or replace if necessary) L : Lubricate R : Replace*
- *(#) - After first service, engine oil and engine oil filter replacement is a mandatory at every 12 months even the vehicle has not covered the specified kilometre.*
- *(**) - If any fastener found loose tighten to the specified torque.*

PERIODIC MAINTENANCE SCHEDULE (PMS)

APPLICABLE MARKETS: OTHER THAN EUROPE,
UK AND NORTH AMERICA

4. Periodical Maintenance Schedule (PMS)

The maintenance schedule detailed here will help you to maintain your Interceptor Bear 650 motorcycle meticulously to get along trouble free service. The schedule provided herein is based upon an average riding conditions and indicates the km at which regular inspections, adjustments, replacements and lubrications are to be carried out. The frequency of the maintenance must be shortened depending upon the severity of the driving condition or if the motorcycle is used in a very dust environment. Contact the nearest Royal Enfield Authorised Service Centre for expert advice and to carry out the required maintenance.

Sl. No.	Description	Periodic Maintenance (Whichever is earlier)										
	km (x 1,000)	**0.5**	**5**	**10**	**15**	**20**	**25**	**30**	**35**	**40**	**45**	**50**
	miles (x 1,000)	**0.3**	**3**	**6**	**9**	**12**	**15**	**18**	**21**	**24**	**27**	**30**
	Months	**1.5**	**6**	**12**	**18**	**24**	**30**	**36**	**42**	**48**	**54**	**60**
1	Engine oil (#)	R		R		R		R		R		R
		Check level at every 1000 km or earlier and top up as required										
2	Engine oil filter element (#)	R		R		R		R		R		R
3	Inlet and Exhaust valve clearance(**)			I		I		I		I		I
4	Spark plug	I	I	I	I	R	I	I	I	R	I	I
5	HT lead	I	I	I	I	I	I	I	I	I	I	I
6	Rubber hose, Air filter to throttle body	I	I	I	I	I	I	I	I	I	I	I
7	Rubber hose, Inlet manifold/ Adapter	I	I	I	I	I	I	I	I	I	I	I
8	Evaporative Emission Equipment rubber hoses	I	I	I	I	I	I	I	I	I	I	I
9	Fuel filter External					R				R		
10	Air filter element	C	C	R	C	R	C	R	C	R	C	R
		Clean/replace more frequently if operated in dusty condition										
11	Vent Pipe under air filter box	I	I	I	I	I	I	I	I	I	I	I
12	Accelerator and Throttle pulley cables free play	A	A	A	A	A	A	A	A	A	A	A
13	Clutch Cable / lever free play	Adjust every 1000 kms or earlier as required										
14	Hand levers pivot point	Lubricate every 1000 kms or earlier as required										
15	Brake pads - Front and Rear	I	I	I	I	I	I	I	I	I	I	I
16	Disc Brake fluid level - Front and Rear	I	I	I	I	R	I	I	I	R	I	I
17	Rear brake pedal and Gear change pedal pivot	L	L	L	L	L	L	L	L	L	L	L
18	Brake hose and Banjo Bolt - Front and Rear	I	I	I	I	I	I	I	I	I	I	I

Sl. No.	Description	Periodic Maintenance (Whichever is earlier)										
	km (x 1000)	0.5	5	10	15	20	25	30	35	40	45	50
	Miles (x 1000)	0.3	3	6	9	12	15	18	21	24	27	30
	Months	1.5	6	12	18	24	30	36	42	48	54	60
19	Headstock bearings	I	I	I	I	I	I	I	I	I	I	I
20	Rear Wheel Drive Chain	Lubricate and Adjust every 1000 kms / Clean, Lubricate and Adjust every service or earlier as required										
21	Rear Wheel Cush rubbers				I				I			
22	Spokes tightness / Wheel rim run out Front and Rear (It is applicable for spokes wheel model)	I	I	I	I	I	I	I	I	I	I	I
23	Battery terminals (apply petroleum jelly)	I	I	I	I	I	I	I	I	I	I	I
24	Earth wire eyelet tightness			I		I		I		I		I
25	Tyre wear pattern Front and Rear	I	I	I	I	I	I	I	I	I	I	I
26	Pivot-side stand	L	L	L	L	L	L	L	L	L	L	L
27	Rider and Pillion Foot rest pivot	L	L	L	L	L	L	L	L	L	L	L
28	All mounting fasteners in vehicle for tightness**	I	I	I	I	I	I	I	I	I	I	I

A : Adjust C : Clean I : Inspect (Clean, Adjust, Lubricate or replace if necessary) L : Lubricate R : Replace
(#) - After first service, engine oil and engine oil filter replacement is a mandatory at every 12 months even the vehicle has not covered the specified kilometre.
(**) - If any fastener found loose tighten to the specified torque.

NOTE

- *For Maintenance after 50,000 kms, Please repeat the same frequency specified above, in consultation with a Royal Enfield Authorized Dealer/Service Center.*

EMS ADAPTATION PROCEDURE

The following procedure to be followed when if any change in the EMS sensors or fuel type

Step 1 - Check for Engine Oil Temperature (EOT) at start is less than **40˚C**.

Step 2 - Allow the engine to idle and leave it undisturbed till the Engine Oil Temperature reaches 115˚C.(Time required for the EOT to reach **115˚C** will be 30 minutes approximately)

Step 3 - Once Engine Oil Temperature reaches **115˚C**, turn "**OFF**" the ignition key and **DO NOT** turn it back ON for the next 30 seconds.

GENERAL AND SPECIAL TOOLS

CONTENTS **PAGE**

4. General and Special Tools 40

4.1 General Tools..... 40

4.2 Measurement Tools.....43

4.3 Special Tools.....45

4.3.1. Engine 45

4.3.2. Vehicle 48

4. General and Special Tools

4.1 General Tools

Sl. No.	Size	Part Description	Illustration
1	100 - 225mm	Screw Driver Flathead	
2	100 - 225mm	Screw Driver Phillips	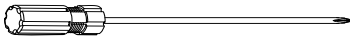
3	3mm,T20,T25	Torx Socket	
4	-	Chisel Flat	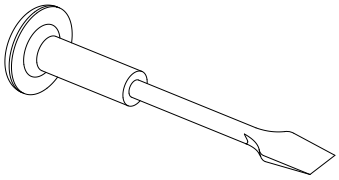
5	-	Chisel Pointed	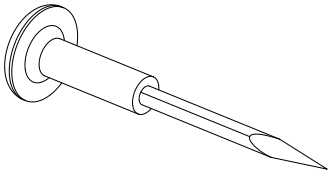
6	8 to 27mm	Spanner (Double End/Open End)	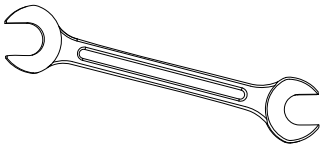
7	8 to 27mm	Spanner (Ring)	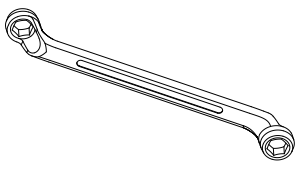
8	-	Hammer	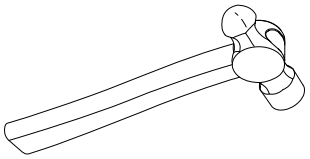

Sl. No.	Size	Part Description	Illustration
9	-	Plastic Hammer	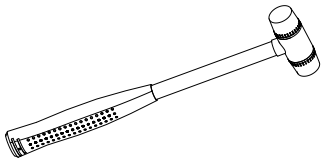
10	-	Mallet	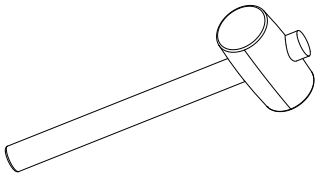
11	-	Tommy Bar	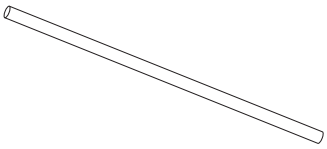
12	3 - 14mm	Allen Key	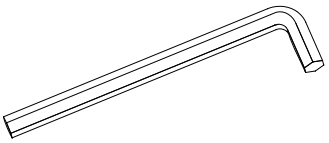
13	3 - 14mm	Allen Socket	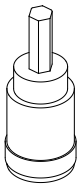
14	4 to 30mm	Hex Socket	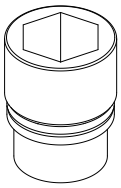
15	13mm	Bi-hexagonal	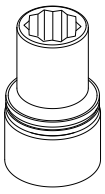
16	5" & 10"	Extension	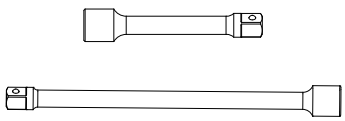
17	-	Ratchet	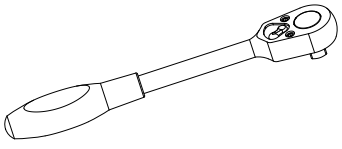

Sl. No.	Size	Part Description	Illustration
18	0 - 20N-m 10 - 50N - m & 22 - 100N - m	Torque Wrench	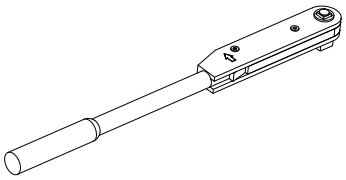
19	-	Nose Plier	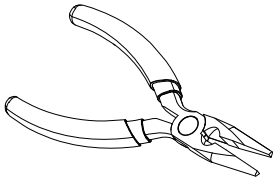
20	-	Circlip Plier (Internal - External)	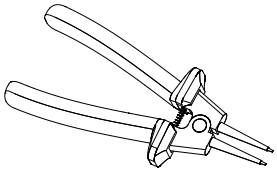
21	-	Adjustable Plier	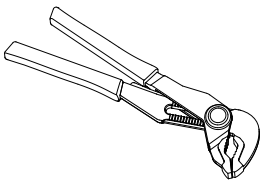
22	-	Scissor Jack	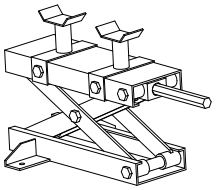
23	-	V-block	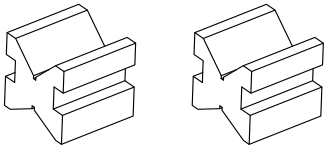
24	10 N-m - 200 N-m	Digital Torque Wrench	
25	-	14 mm Front Spindle Adapter	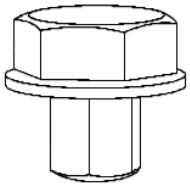
26	-	Punch	

Sl. No.	Size	Part Description	Illustration
27	-	Clamp Removal and install tool	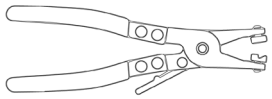
28	-	Magnetic stick	

4.2 Measurement Tools

1	-	Vernier Caliper	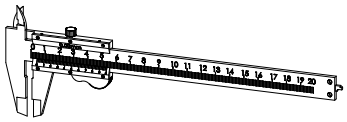
2	0 - 25mm, 25 - 50mm, 50 - 75mm, 75 - 100mm	Micrometer	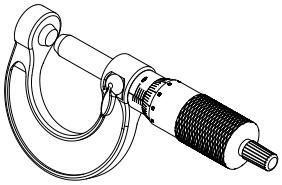
3	-	Bore Gauge	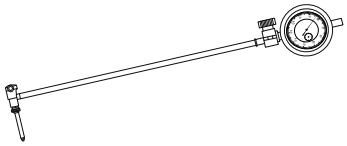
4	-	Dial Gauge with Magnetic Stand	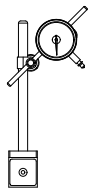
5	-	Tyre Depth Gauge	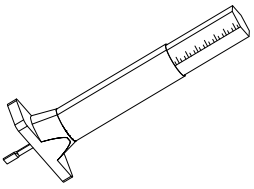
6	-	Steel Ruler	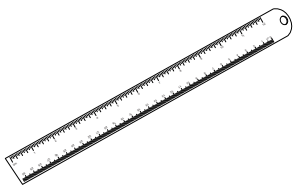

Sl. No.	Size	Part Description	Illustration
7	-	Feeler gauge	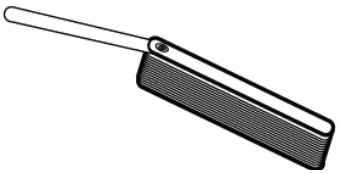
8	-	Thick straight edge	
9	-	Inside micrometer	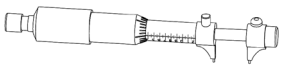

SPECIAL TOOLS

4.3 Special Tools

4.3.1. Engine

Sl. No.	Part Number	Part Description	Illustration
1	ST-30274-A	Magneto Puller Assembly	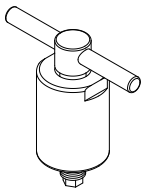
2	ST-27533-2	Crank Gears Locking Tool	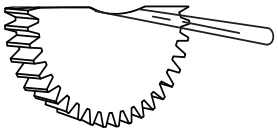
3	ST-30266-A	Clutch Holder	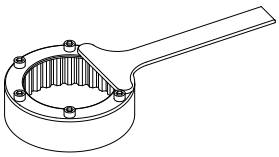
4	ST-30296-A	Piston Ring Compressor	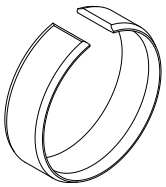
5	ST-30294-A	Oil Filter Wrench	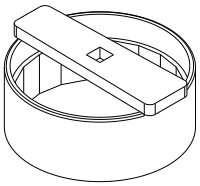
6	ST-27562-1	Angular Torque Wrench	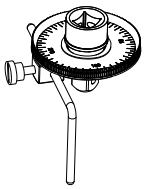
7	ST-30264-A	Clutch Activating Shaft Oil Seal Installer	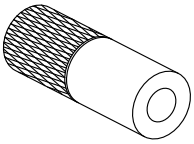
8	ST-30262-A	Clutch Activating Lever Top Bearing Installer	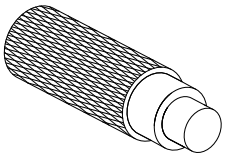

Sl. No.	Part Number	Part Description	Illustration
9	ST-30265-A	Clutch Activating Shaft Top Bearing Puller	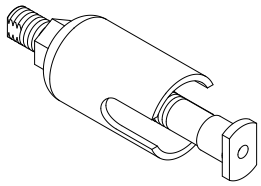
10	ST-30261-A	Clutch Activating Lever Bottom Bearing Installer	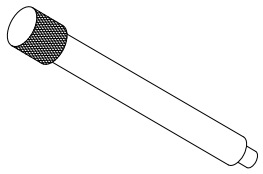
11	ST-30263-A	Clutch Activating Shaft Bottom Bearing Puller	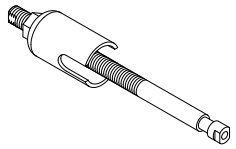
12	ST-30270-A	Gear Shifter Drum NRB Installer	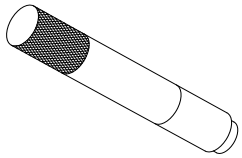
13	ST-30293-A	Oil Filter Union Wrench	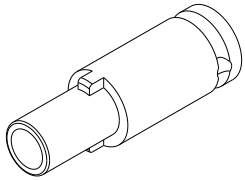
14	ST-27534-2	FD Sprocket Holder	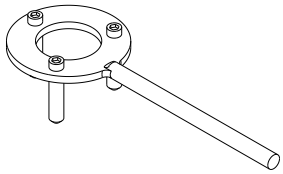
15	ST-27528-2	Valve Spring Compressor	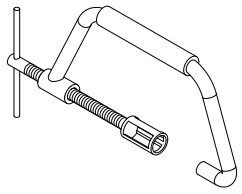
16	ST-30295-A	Oil Pressure Gauge	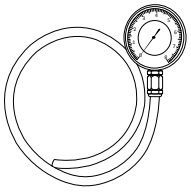
17	ST-30260-A	CAM TDC Aligning Plate (OLD)	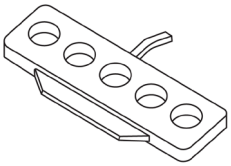

Sl. No.	Part Number	Part Description	Illustration
18	ST-30937-A	CAM TDC Aligning Plate (NEW)	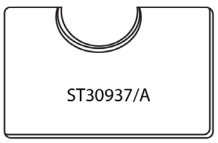

4.3.2. Vehicle

Sl. No.	Part Number	Part Description	Illustration
1	ST-31884-A	USD Fork Nut Remover And Installer	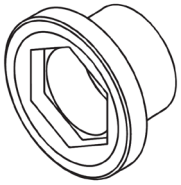
2	ST-31885-A	USD Dust Seal And Oil Seal Installer	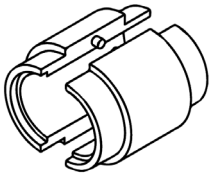
3	ST-31886-A	USD Stopper Ring Removal Jig	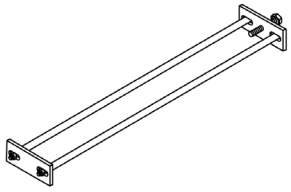
4	ST-31887-A	USD Stopper Ring Remover	
5	ST-31888-A	USD Piston Comp. Remover	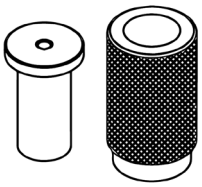
6	ST-31889-A	T-STEM Taper Roller Bearing Remover	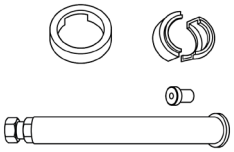
7	ST-31890-A	Head Stock Ball Race Installer Adapter	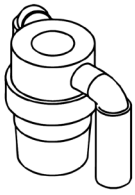

8	ST-31891-A	Swing Arm Dust And NRB Installer	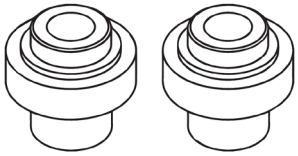
9	ST-31892-A	Head Stock Ball Race Remover	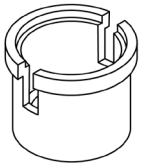
10	ST-31893-A	T STEM Taper Roller Bearing Installer	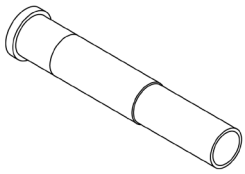
11	ST-31894-A	Common Screw Rod For Head Stock Ball Race Installer	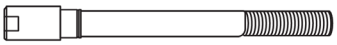
12	ST-31895-A	Swing Arm NRB Bearing Remover Tool	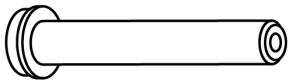
13	ST-30267-A	Frame Adjuster OD 14.8/ ID 10.8 mm-Engine	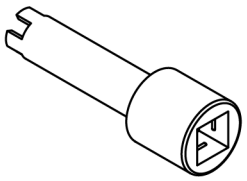
14	ST-30268-A	Frame Adjuster OD 16.7/ ID 13 mm-Engine	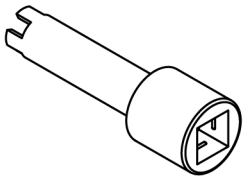
15	ST-30272-A	Headstock Bearing Puller-Assembly	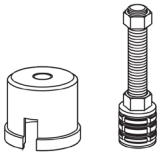
16	ST-32304-A	Centre Stand Fixture	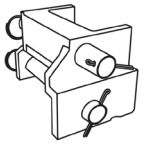

Sl. No.	Part Number	Part Description	Illustration
17	ST-32306-A	T Stem Taper Roller Bearing Remover	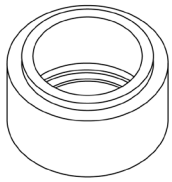
18	ST-30269-A	Frame Adjuster OD 21.5/ID18 mm - Swingarm	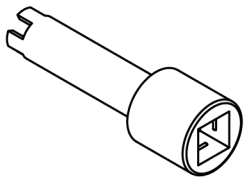
Head Stock Ball Race Installer tool full assembled view			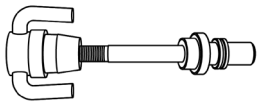

ENGINE

CONTENTS PAGE

5.1. COMPONENTS REMOVAL FROM ENGINE 48

5.2. COMPONENTS ASSEMBLY ONTO ENGINE 78

5.3. ENGINE REMOVAL FROM FRAME 123

5.4. ENGINE ASSEMBLY TO FRAME 154

5.5. ENGINE DISMANTLING..... 188

5.6. ENGINE INSPECTION 235

5.7. CRANKSHAFT JOURNAL BEARING SELECTION 248

5.8. ENGINE ASSEMBLY..... 256

5.9. ENGINE TROUBLESHOOTING 320

COMPONENTS THAT CAN BE DISMANTLED FROM ENGINE WITHOUT REMOVING FROM FRAME

CONTENTS PAGE

5. ENGINE 6

5.1 Components Removal from Engine 6

5.1.1. Drain Plug 6

5.1.2. Oil Filter 7

5.1.3. Starter Motor 7

5.1.4. Breather Hose Connections 8

5.1.5. Breather Box 8

5.1.6. Gear Shift Linkage 9

5.1.7. Throttle Body Covers on LH and RH 9

5.1.8. Throttle Cable 9

5.1.9. Injector, TPS, MAPS, ISC Connections 10

5.1.10. Air Filter Hoses to Throttle Body 10

5.1.11. Throttle Body 11

5.1.12. Inlet Manifold Rubber Flanges 11

5.1.13. Spark Plug Suppressor Caps on LH and RH 11

5.1.14. Spark Plugs 12

5.1.15. Clutch Cable on Clutch Cover 12

5.1.16. Clutch Actuating Lever Assembly 12

5.1.17. Clutch Cover 13

5.1.18. Clutch Actuating Shaft 14

5.1.19. Oil Level Window 14

5.1.20. Clutch Plates 15

5.1.21. Oil Pump 17

5.1.22. Gear Shifter Shaft 18

5.1.23. Stator and GPS Wiring Connectors 19

CONTENTS **PAGE**

5.1.24. FD Sprocket Cover 20

5.1.25. Gear Position Sensor (GPS) 20

5.1.26. FD Sprocket 21

5.1.27. Cylinder Head Cover 22

5.1.28. Crankshaft Plug On Magneto Cover 23

5.1.29. Rocker Carrier LH from Cylinder Head 23

5.1.30. Rocker Carrier RH from Cylinder Head 24

5.1.31. Auto Chain Tensioner 25

5.1.32. Camshaft Sub Assembly 25

5.1.33. Magneto Cover 27

5.1.34. Stator Assembly with CPS 28

5.1.35. Magneto Rotor Bolt 29

5.1.36. Starter Clutch from Magneto Rotor 30

5.1.37. Cylinder Head 31

5.1.38. Components from Cylinder Head 31

5.1.39. Floating Chain Pad 33

5.1.40. Cylinder Barrel 33

5.1.41. Pistons 33

5.1.42. Oil Pressure Switch 34

5.1.43. Oil Pan 34

5.1.44. Oil Strainer 34

5.1.45. Oil Bypass 35

5. ENGINE

5.1 Components Removal from Engine

⚠ WARNING

The engine and exhaust system get extremely hot during normal operation and direct contact with skin can cause serious burns. Make sure engine is in normal temperature (OR) cooled before starting operation.

NOTE

- *Ensure the motorcycle is upright on a firm and flat surface.*
- *Start the engine and allow the engine and oil to warm up for a few minutes and then turn it OFF to facilitate easy draining of oil.*

5.1.1. Drain Plug

- Loosen and remove oil filler cap **(a)** from the crankcase top on the RH side.
- Use an adjustable plier with soft jaws to unscrew filler cap if necessary.

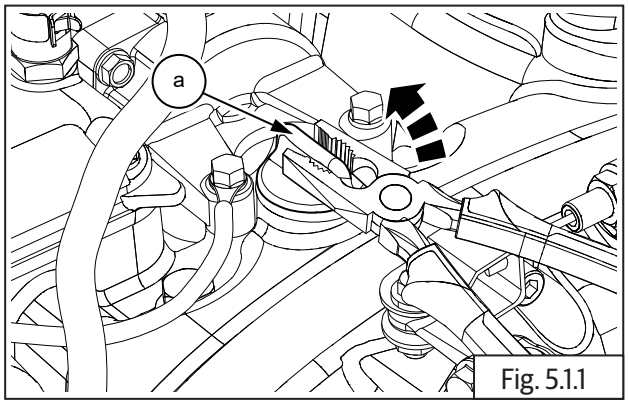

Fig. 5.1.1

	Adjustable plier with soft jaws

- Place a tray **(a)** under the engine, loosen and remove magnetic drain plug **(b)** along with washer **(c)** from the front end of the oil sump.
- Allow the engine oil to drain out completely from the engine.

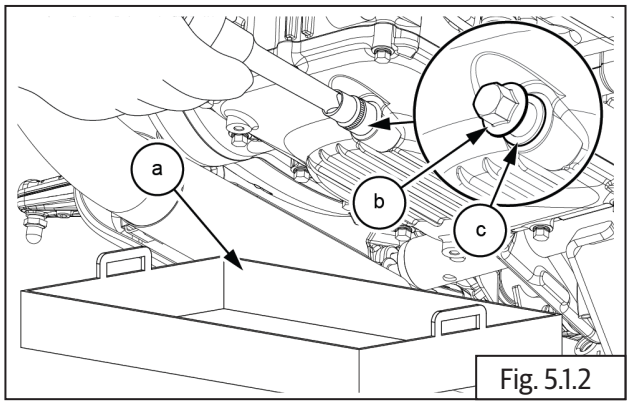

Fig. 5.1.2

	13 mm Socket with Ratchet

⚠ WARNING

DO NOT spill oil. Collect used oil in a separate container and dispose it through authorized disposal agencies in your locality. Avoid skin OR body contact with the oil. Promptly wash affected area with soap and water.

NOTE

- *Ensure the engine oil is drained completely.*
- *After draining the oil suitably cover the oil filler cap hole to prevent debris and/or small components falling into the crankcase.*

5.1.2. Oil Filter

- Place a tray under the engine oil filter.
- Loosen and remove oil filter **(a)** located on front bottom of engine **(b)** using special tool.

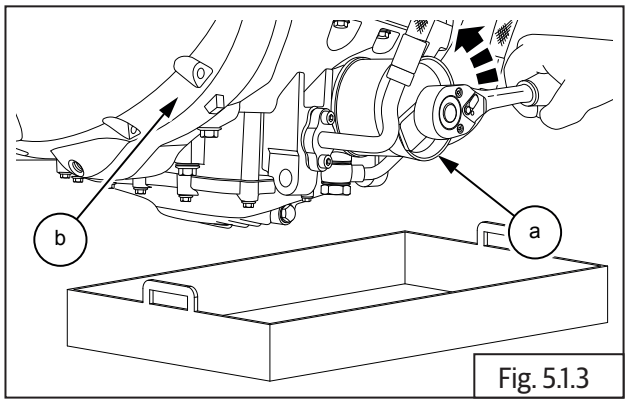

Fig. 5.1.3

SPL 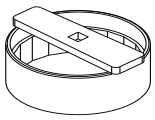	Part No: ST-30294-A
	Part Name: Oil filter wrench with Ratchet

5.1.3. Starter Motor

⚠ CAUTION

Ensure battery cables are disconnected.

Ensure that the ignition and kill switch are in OFF position.

- Lift the rubber cover slowly, loosen and remove Hex nut **(M6) (a)** from starter motor **(b)** and disconnect positive (+) terminal.

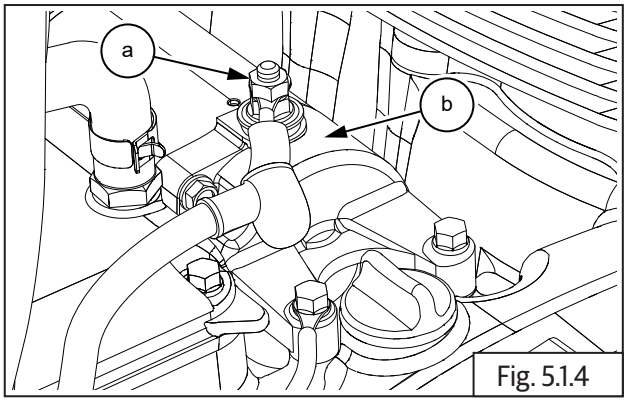

Fig. 5.1.4

	10 mm Double end spanner

- Loosen and remove 2 Nos. Hex flange head mounting bolts **(M6) (a)** holding starter motor **(b)** to crankcase **(c)**.
- Remove negative (-ve) cable from the mounting bolt.

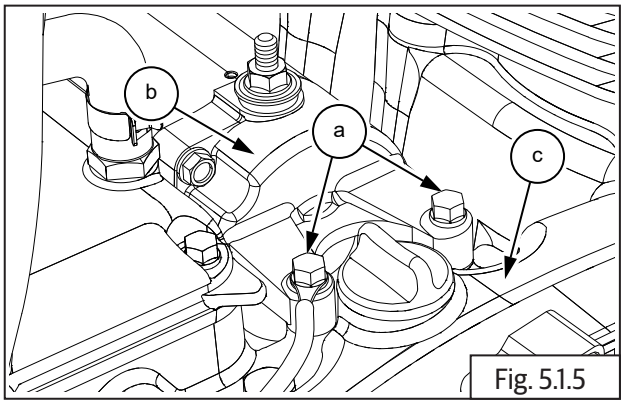

Fig. 5.1.5

	8 mm Socket with Ratchet

- Gently pull out and lift starter motor **(a)** from engine.

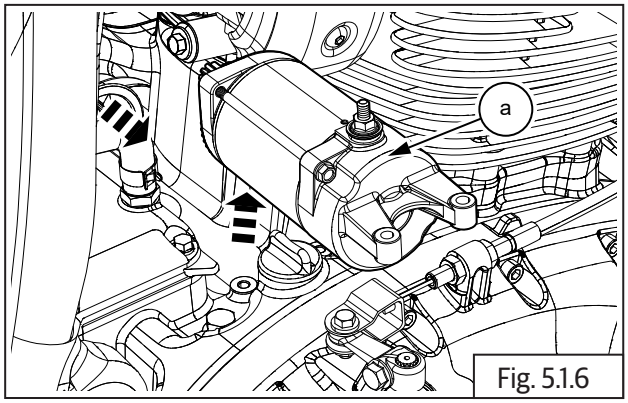

Fig. 5.1.6

NOTE
• *Do not tap on the starter motor while removing it. Tapping may damage the internal components.*

5.1.4. Breather Hose Connections

- Release the clamp **(a)** to disconnect breather hose **(b)** from air filter box **(c)**.

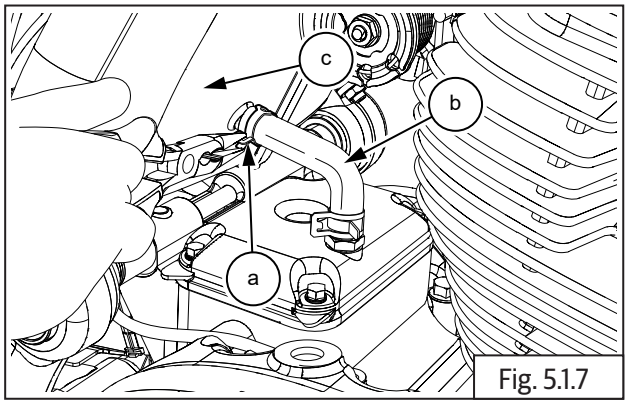

Fig. 5.1.7

	Nose plier

- Release the clamp **(a)** to disconnect breather hose **(b)** from breather box **(c)**.

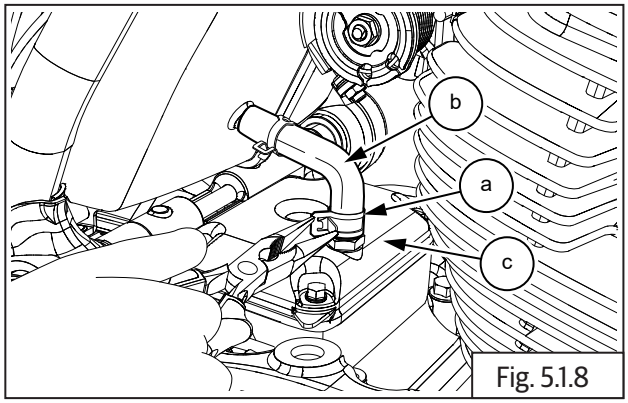

Fig. 5.1.8

	Nose plier

- Remove breather hose **(a)**.

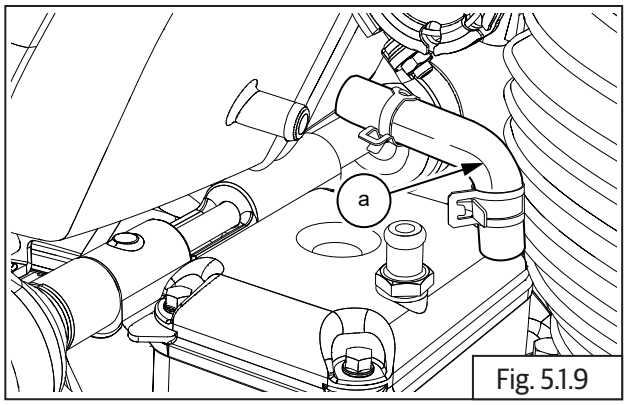

Fig. 5.1.9

5.1.5. Breather Box

- Loosen and remove the 5 Nos. Hex flange head bolts **(M6) (a)**.

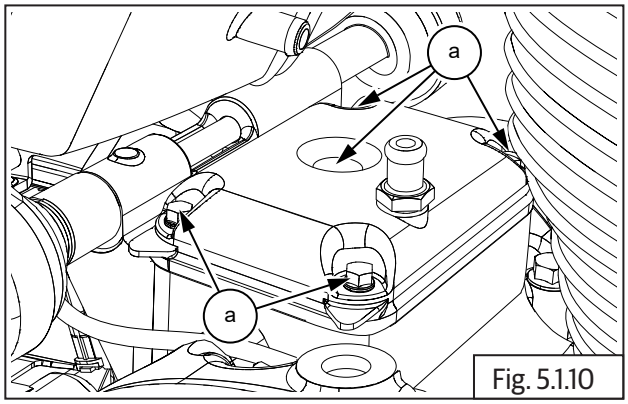

Fig. 5.1.10

	10 mm Socket with Ratchet

- Gently remove breather box cover **(a)** along with gasket **(b)**.

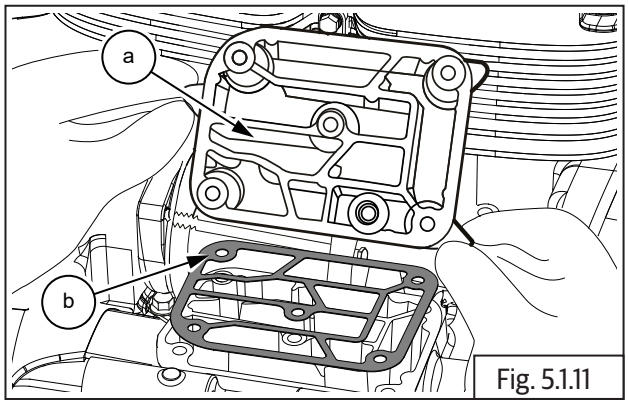

Fig. 5.1.11

5.1.6. Gear Shift Linkage

- Loosen Hex flange bolt **(M6) (a)** to remove gear shift lever **(b)** from gear shaft.

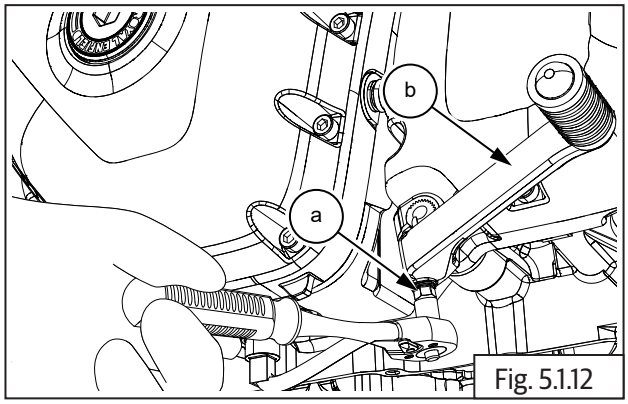

Fig. 5.1.12

	10 mm Socket with Ratchet

5.1.7. Throttle Body Covers on LH and RH

- Loosen and remove 2 Nos. Hex socket button head screws **(M5) (a)** on the throttle body cover **(b)** RH.
- Repeat the above process to remove cover LH.

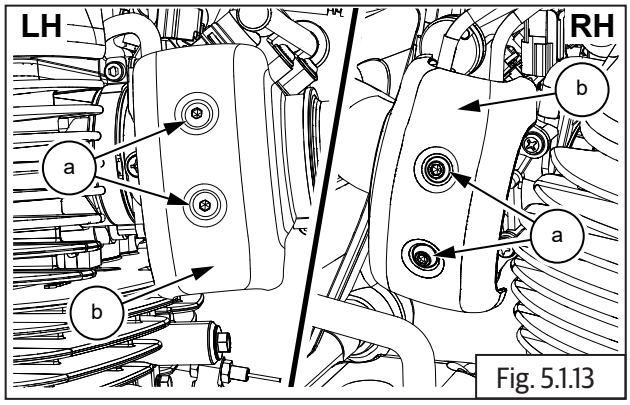

Fig. 5.1.13

	4 mm Allen Socket with Ratchet

5.1.8. Throttle Cable

- Disconnect throttle cables from throttle body.

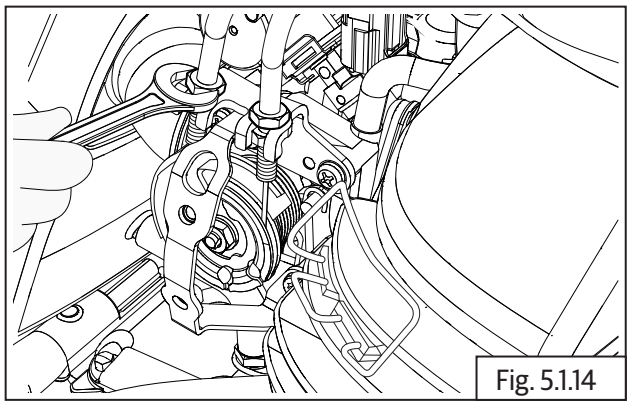
Fig. 5.1.14

5.1.9. Injector, TPS, MAPS, ISC Connections

Injector, Throttle Position Sensor (TPS), Manifold Absolute Pressure (MAP) Sensor and Idle Speed Controller (ISC) Connections

- Ensure ignition and stop switch are in OFF position.
- Disconnect throttle position sensor connector **(a)** from LH throttle body **(b)**.

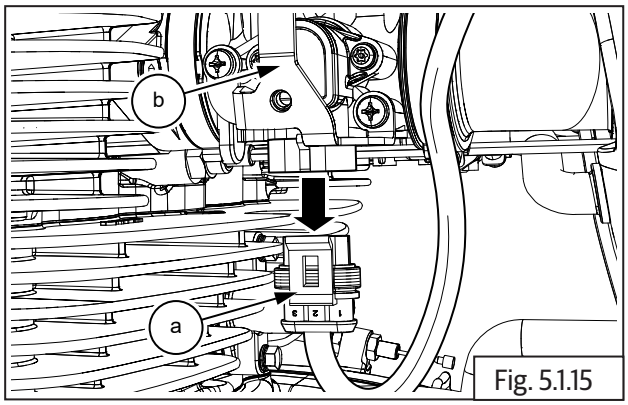

Fig. 5.1.15

- Gently press connector lock to disconnect fuel injector connectors **(a)** from LH and RH of throttle body **(b)**.

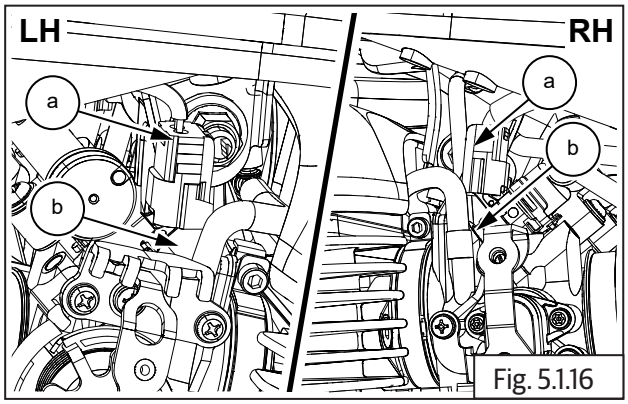

Fig. 5.1.16

- Disconnect idle speed control sensor (ISC) connector **(a)** from throttle body **(b)**.

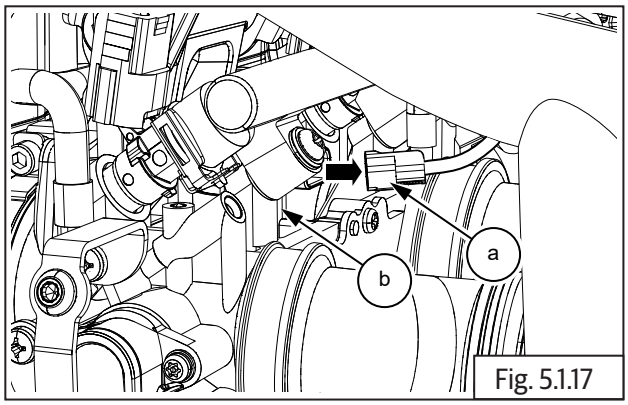

Fig. 5.1.17

5.1.10. Air Filter Hoses to Throttle Body

- Loosen both LH and RH worm clip screws **(M5) (a)** and separate the hose from air filter housing **(b)** to throttle body **(c)**.

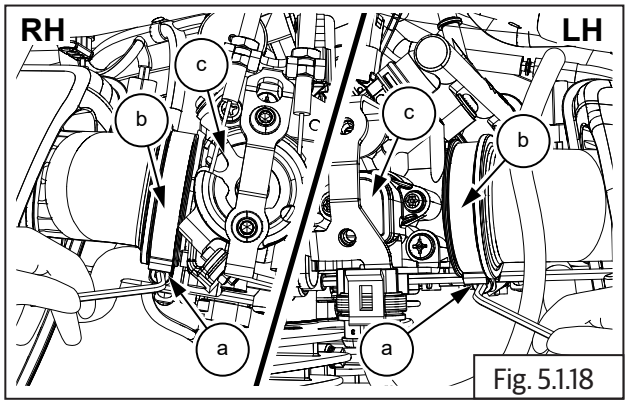

Fig. 5.1.18

	4 mm Allen Socket with Ratchet

5.1.11. Throttle Body

- Ensure TPS, MAP and ISC wiring connectors are disconnected.
- Ensure the air filter housing is disconnected.
- Ensure the throttle cables are disconnected.
- Disconnect hoses **(a)** from canister purge valve.

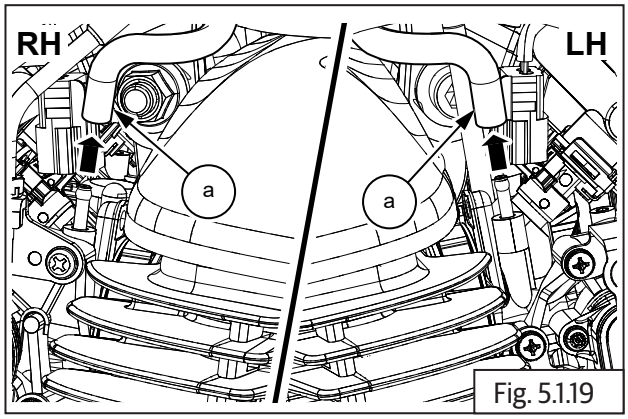

Fig. 5.1.19

- Loosen LH and RH worm clip screws **(M5) (a)** to disconnect throttle body from inlet manifolds.

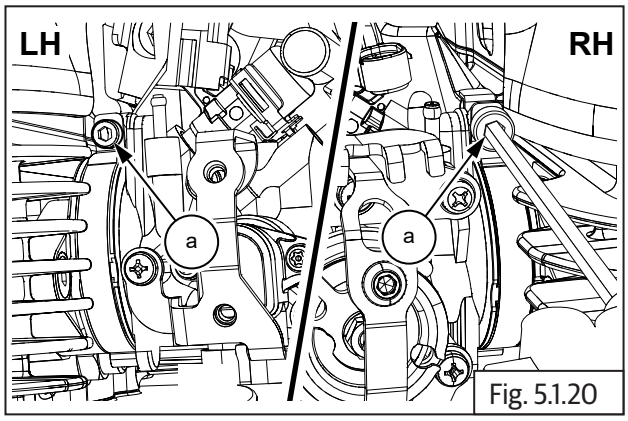

Fig. 5.1.20

	4 mm Allen Socket with Ratchet

5.1.12. Inlet Manifold Rubber Flanges

- Loosen and remove 4 Nos. Countersunk socket head bolts **(M5) (a)** located on inlet manifold of engine.

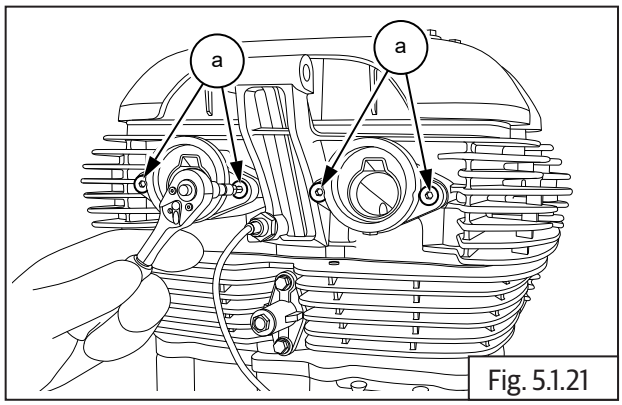

Fig. 5.1.21

	4 mm Allen socket with Ratchet

- Remove 2 Nos. inlet manifold rubber flange **(a)** from engine.

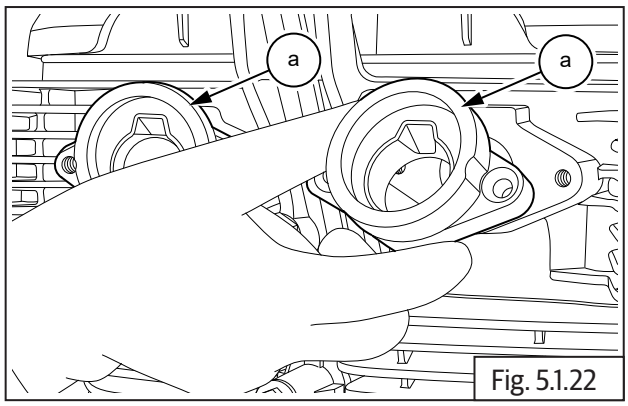

Fig. 5.1.22

5.1.13. Spark Plug Suppressor Caps on LH and RH

- Gently pull out the spark plug suppressor caps from the spark plugs LH & RH.

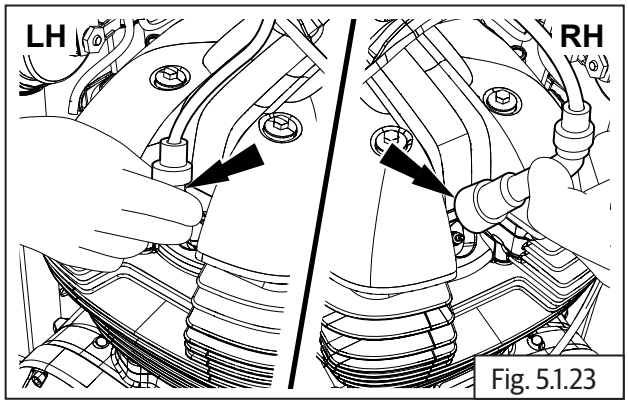

Fig. 5.1.23

5.1.14. Spark Plugs

⚠ CAUTION

Ensure that the ignition and kill switch are in OFF position.

Before removing the spark plugs, blow away any dirt accumulated in the spark plug area with compressed air to prevent it from falling into cylinder head.

- Loosen and remove spark plug **(a)** from RH cylinder head.

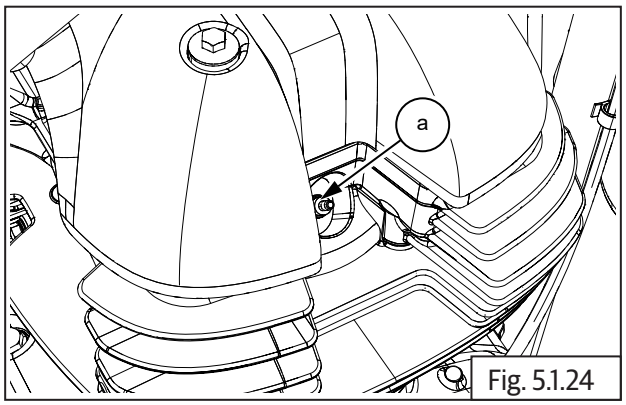

Fig. 5.1.24

	16 mm Socket with Ratchet

- Repeat the procedure to remove LH spark plug.

5.1.15. Clutch Cable on Clutch Cover

- Disconnect clutch cable assembly **(a)** from clutch cover **(b)**. Refer clutch cable dismantling procedure, refer Clutch Cable chapter (XXX).

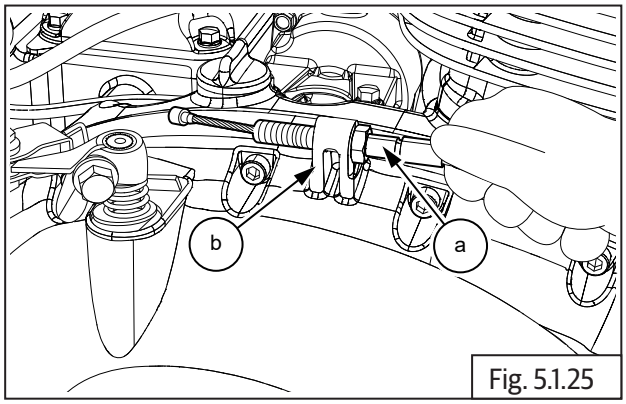

Fig. 5.1.25

5.1.16. Clutch Actuating Lever Assembly

- Loosen and remove Hex head bolt **(M6) (a)** from clutch actuating lever assembly **(b)**.

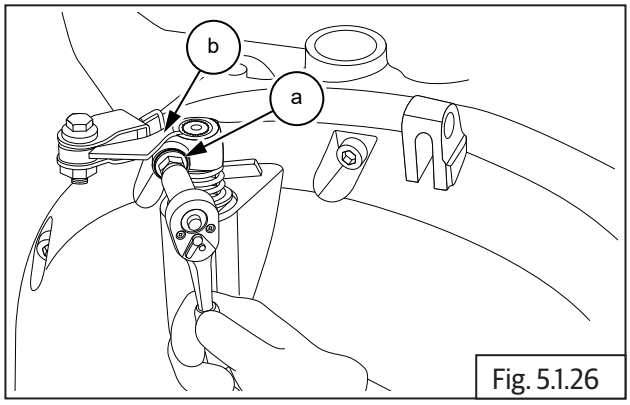

Fig. 5.1.26

	10 mm Socket with Ratchet

- Rotate clutch actuating lever **(a)** in clockwise direction to release tension in spring **(b)**.

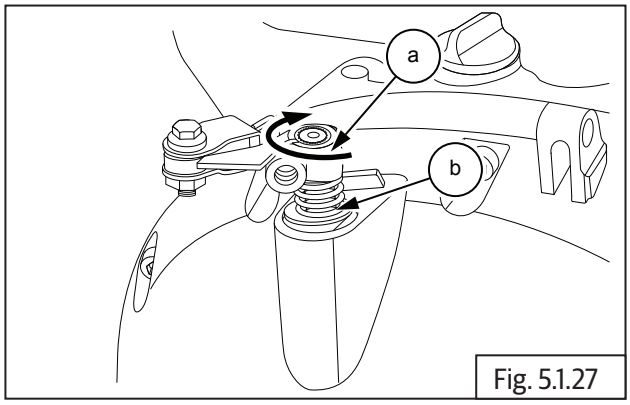

Fig. 5.1.27

- Remove clutch actuating lever **(a)** from clutch shaft **(b)** on cover.

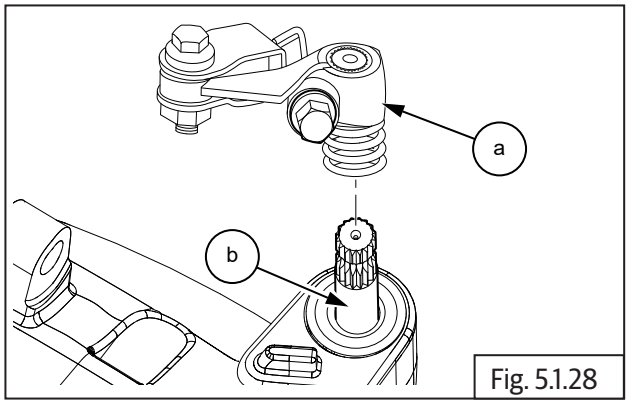

Fig. 5.1.28

	Wedge

NOTE
• *Use a suitable wedge to slightly expand the slot in the clutch actuating arm and gently lift from the shaft.*

5.1.17. Clutch Cover

- Loosen and remove 14 Nos. Hex socket screws **(M6) (a)** in a crisscross pattern to remove clutch cover **(b)** from motorcycle RH.

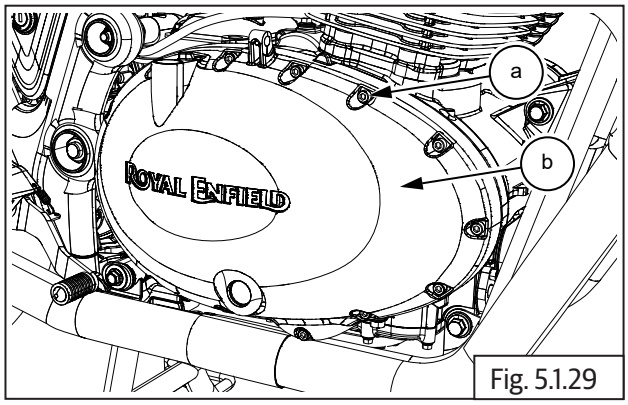

Fig. 5.1.29

	5 mm Allen socket with Ratchet

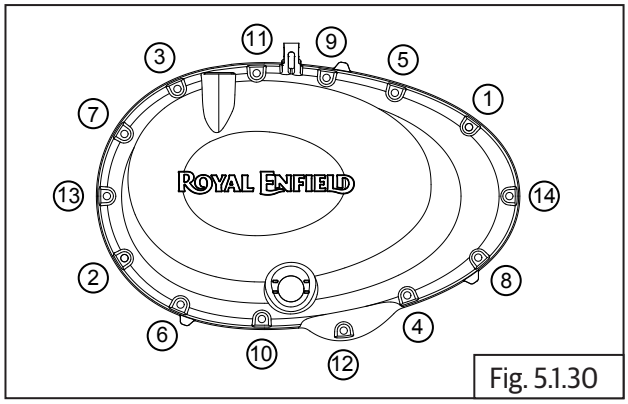

Fig. 5.1.30

- If the cover is jammed in the engine, gently tap on the tabs **(a)** provided on the cover using a plastic/ rubber mallet.

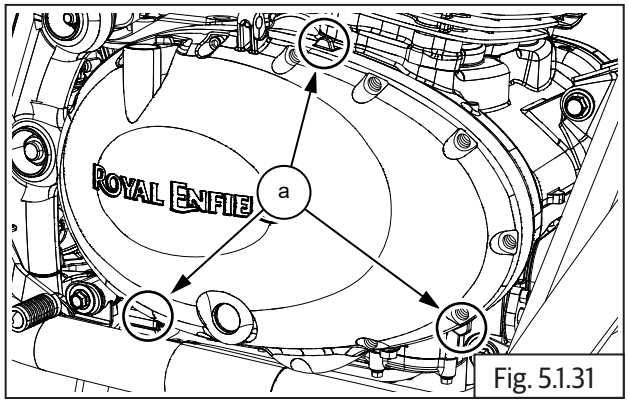

Fig. 5.1.31

	Plastic/Rubber mallet

- Remove gasket **(a)** and dowel pins **(b)** from clutch cover/engine.

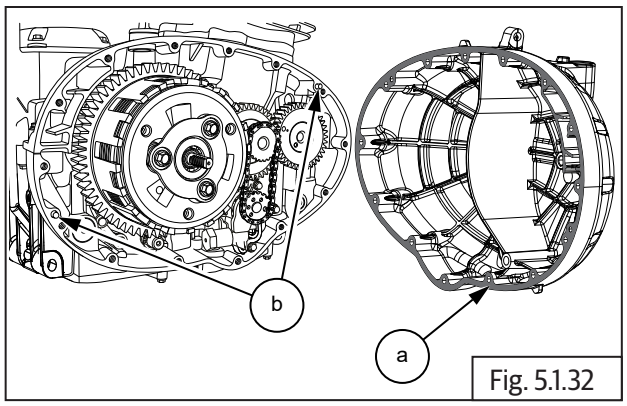

Fig. 5.1.32

⚠ CAUTION
Do not use a sharp tool to scrap the gasket material from the joint faces. **If required scrap only with a soft and blunt tool.**

5.1.18. Clutch Actuating Shaft

- Gently remove the E clip **(a)** and washer **(b)** from the bottom of the clutch actuating shaft inside clutch cover.

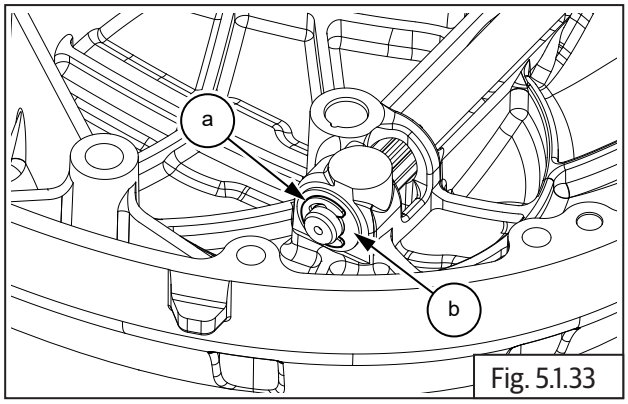

Fig. 5.1.33

	Nose plier

- Remove oil seal **(a)** along with washer **(b)** from outer clutch case.

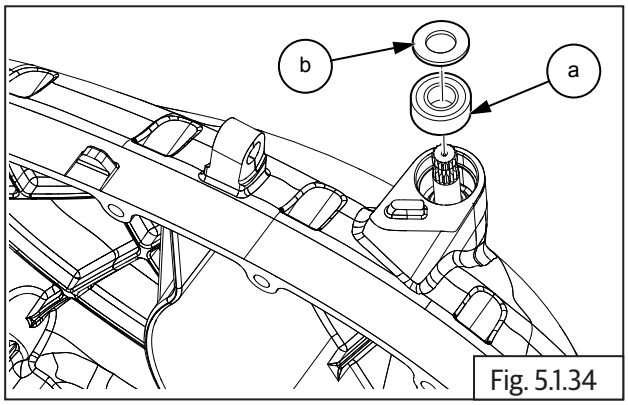

Fig. 5.1.34

- Gently pull out clutch actuating shaft **(a)** from clutch cover **(b)**.

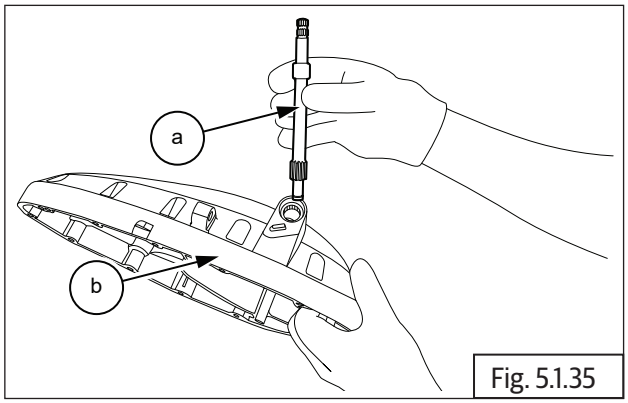

Fig. 5.1.35

- Remove needle roller bearings **(a)** from clutch cover with special tool.

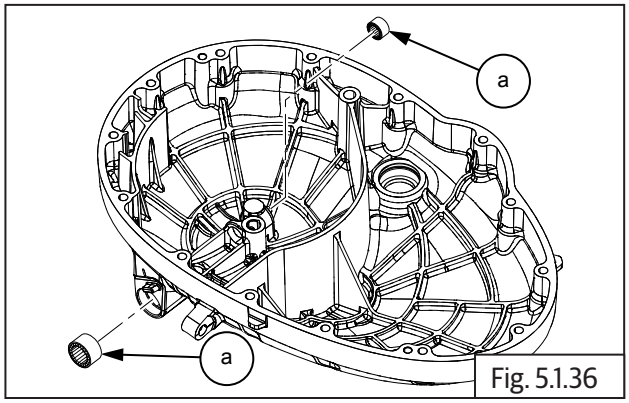

Fig. 5.1.36

SPL 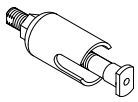	Part No: ST-30265-A
	Part Name: Clutch Actuating Shaft Top Bearing Puller

SPL 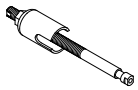	Part No: ST-30263-A
	Part Name: Clutch Actuating Shaft Bottom Bearing Puller

5.1.19. Oil Level Window

- Remove the circlip **(a)** on the oil level window inside clutch cover.

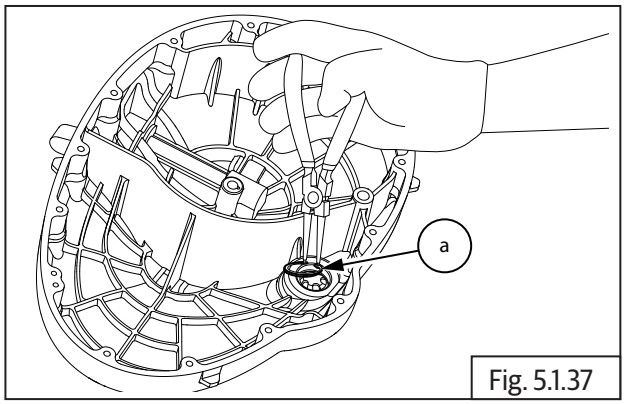

Fig. 5.1.37

	Circlip plier

- Gently press oil window **(a)** from outer side to remove from clutch cover.

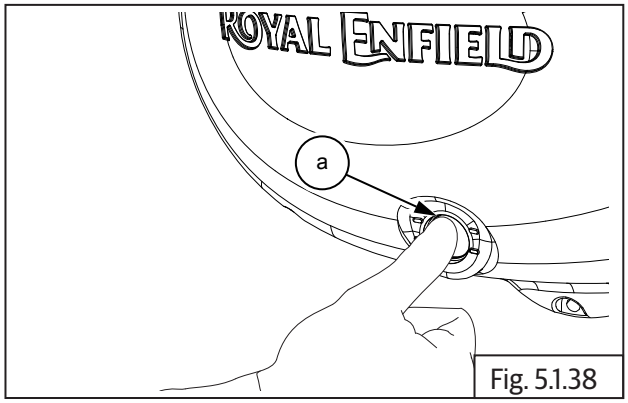

Fig. 5.1.38

5.1.20. Clutch Plates

⚠ CAUTION

Bolts are under spring tension. Loosen bolts progressively and slowly until spring tension is completely released.

- Loosen 3 Nos. Hex flange head bolts **(M6) (a)** on the pressure plate evenly and slowly until tension is released completely.

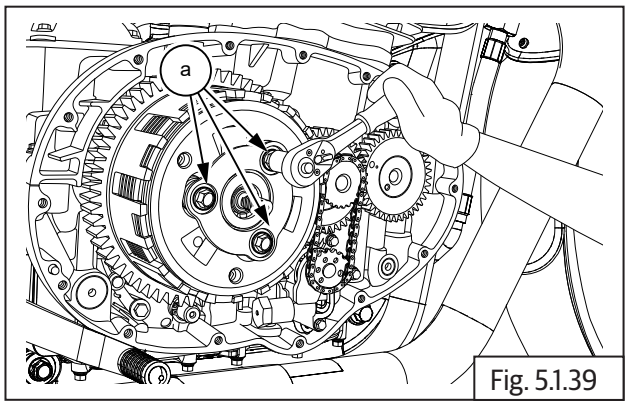

Fig. 5.1.39

	10 mm Socket with Ratchet

- Hold pressure plate **(a)** and remove the bolts **(b)**.
- Remove pressure plate and spring **(c)** from clutch hub.

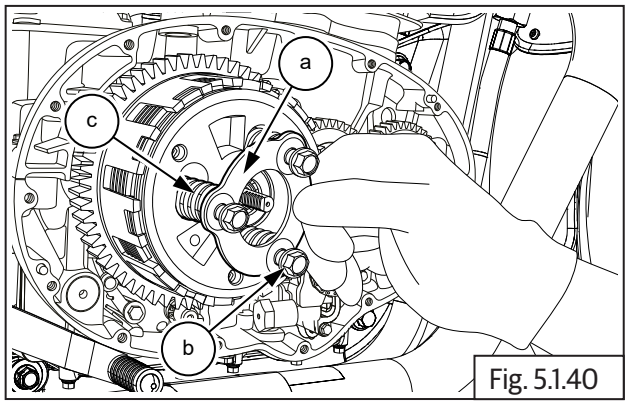

Fig. 5.1.40

- Remove clutch hub **(b)** along with 2 friction plates, 1 steel plate and pull rod **(a)** from the clutch bell.

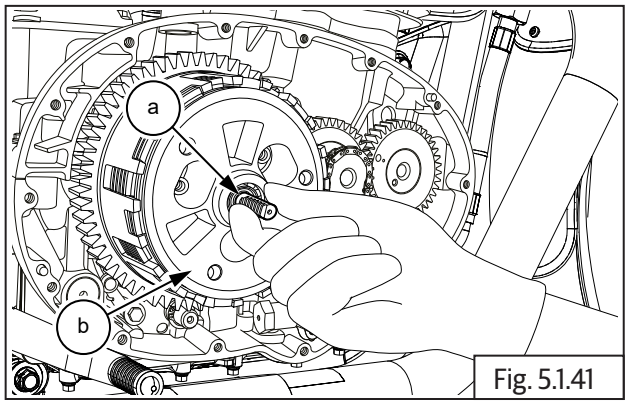

Fig. 5.1.41

- Remove the pull rod from the inner side of clutch bell.
- Remove 1st friction plate **(a)**, steel plate **(b)** and 2nd friction plate **(c)** from clutch hub **(d)**.

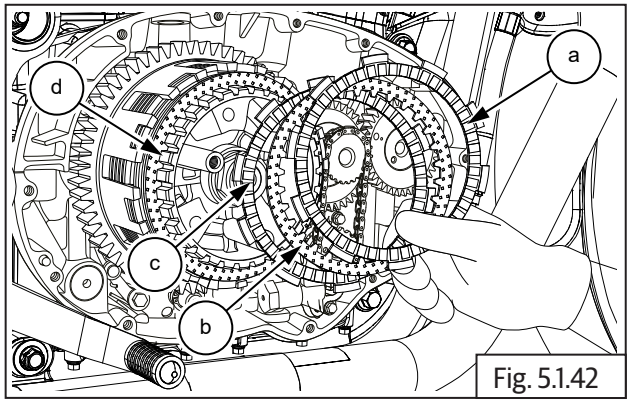

Fig. 5.1.42

- Locate special tool **(a)** on clutch center **(b)** and ensure it is seated fully on the splines.
- Hold the clutch center firmly and remove Hex "U" nut **(M17) (b)** by rotating clockwise.

⚠ CAUTION
Hex "U" nut is a left hand thread. Wrong rotation may damage the threads.

- Remove Hex U nut and washer from countershaft.

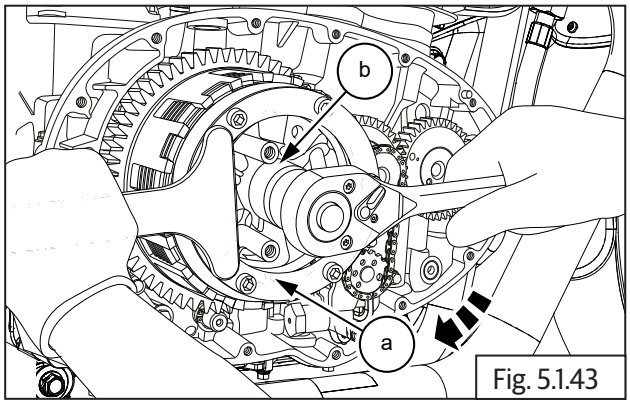

Fig. 5.1.43

SPL 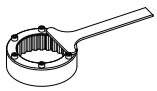	Part No: ST-30266-A
	Part Name: Clutch holder

	24 mm Socket with Ratchet

- Remove special tool and pull out clutch bell assembly **(a)** from the counter shaft along with the remaining 6 plates **(b)** (3 each friction and steel plates) from the clutch housing.

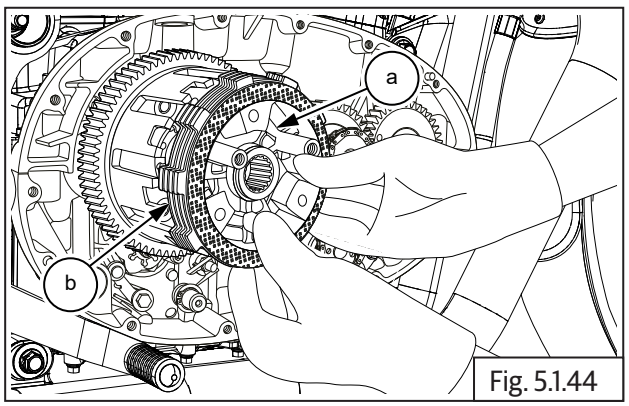

Fig. 5.1.44

NOTE
• *If the plates are to be reused, suitably mark the plates so that they can be reassembled in the same sequence as it was before dismantling.*

- Remove thrust washer **(a)** from counter shaft.

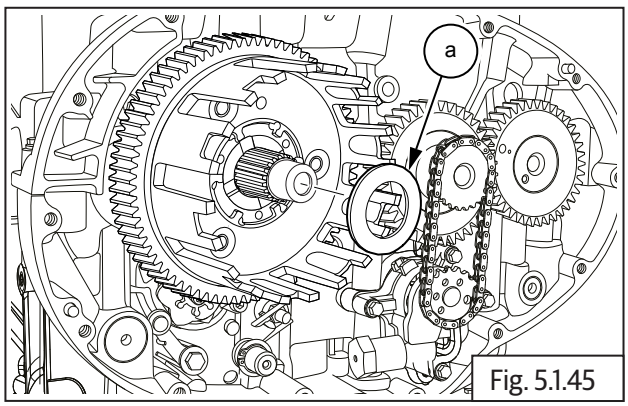

Fig. 5.1.45

- Remove clutch housing **(a)** from counter shaft.

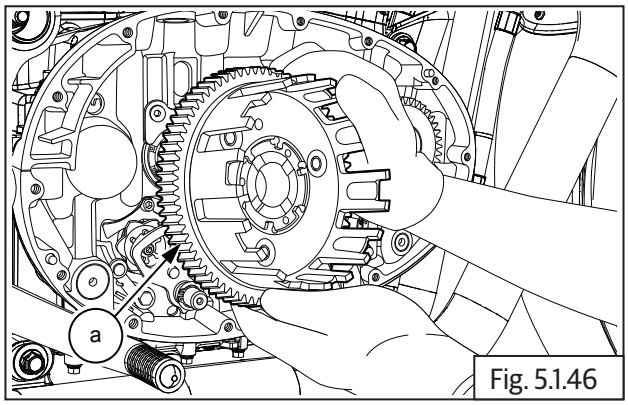

Fig. 5.1.46

- Remove the needle bearing **(a)**.

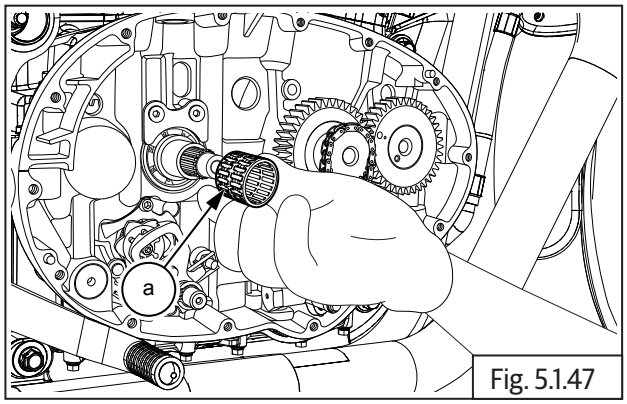

Fig. 5.1.47

- Remove collar bush **(a)** from counter shaft.

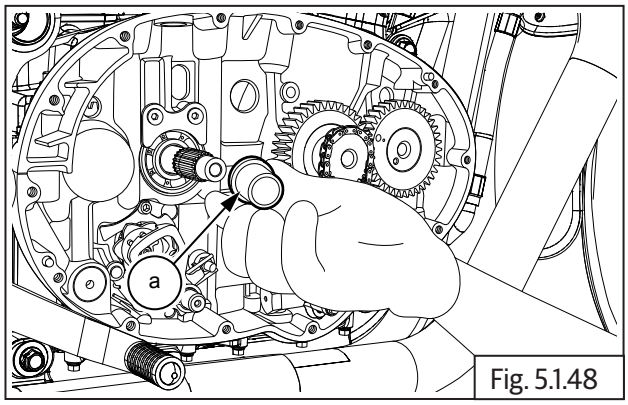

Fig. 5.1.48

5.1.21. Oil Pump

- Loosen and remove Hex flange bolt **(M6) (a)** on oil pump sprocket.

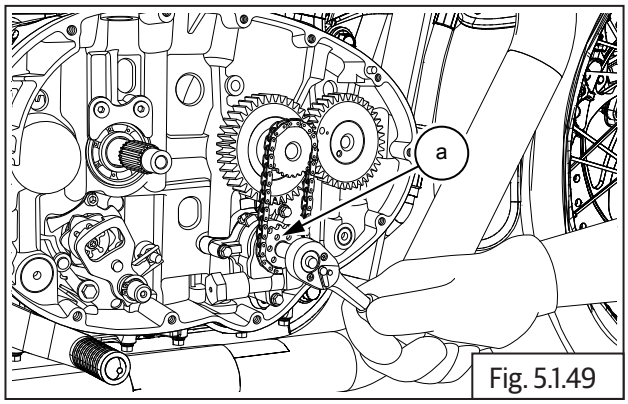

Fig. 5.1.49

	8 mm Socket with Ratchet

- Gently pull out the sprocket **(a)** from oil pump shaft.
- Release and remove chain **(b)** from the teeth on crankshaft sprocket **(c)**.

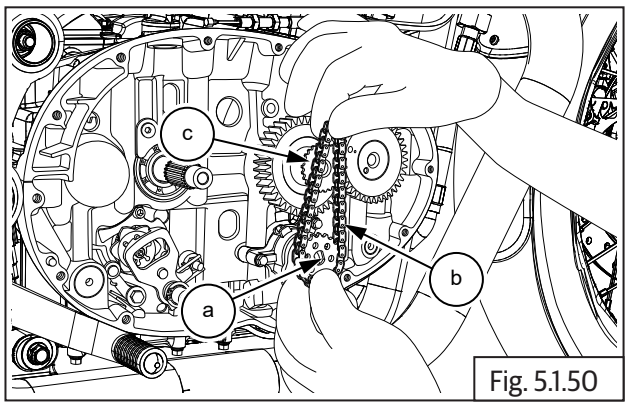

Fig. 5.1.50

- Loosen and remove 4 Nos. Hex flange head bolts **(M6) (a)** to separate oil pump from crankcase.

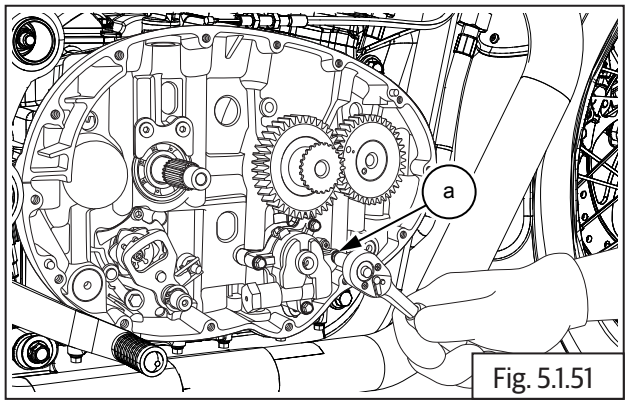

Fig. 5.1.51

	8 mm Socket with Ratchet

- Remove the oil pump **(a)**.

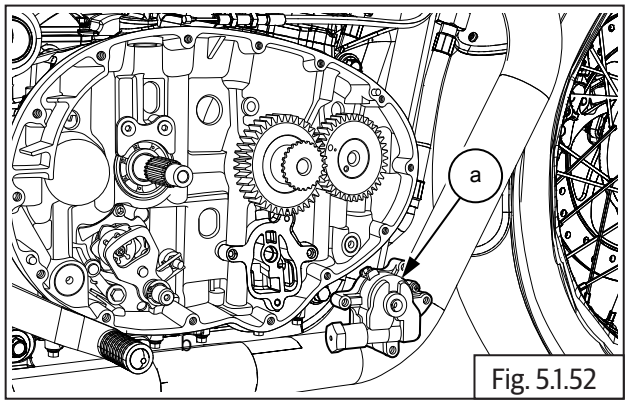

Fig. 5.1.52

NOTE
• *The oil pump does not have any serviceable parts, hence as to be replaced only as a complete assembly.*

5.1.22. Gear Shifter Shaft

- Remove the circlip **(a)** from shifter shaft **(b)** on engine LH side.

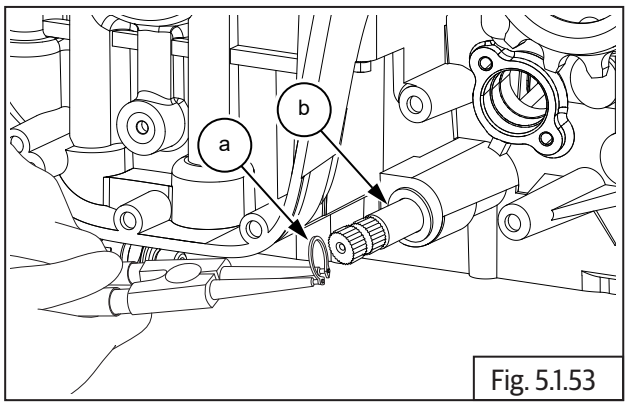

Fig. 5.1.53

	Circlip plier

- Remove the washer **(a)** from shifter shaft.

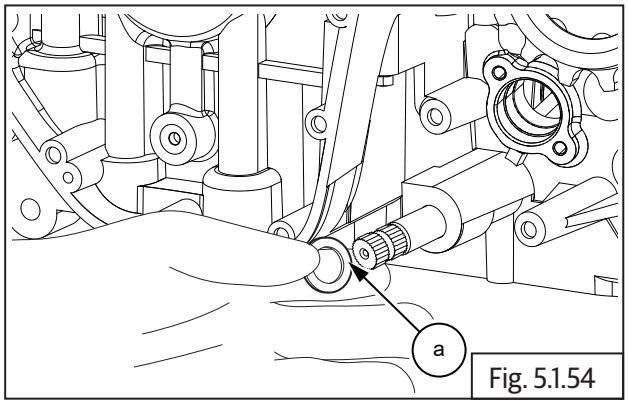

Fig. 5.1.54

- Gently pull out shifter shaft assembly **(a)** from engine RH side.

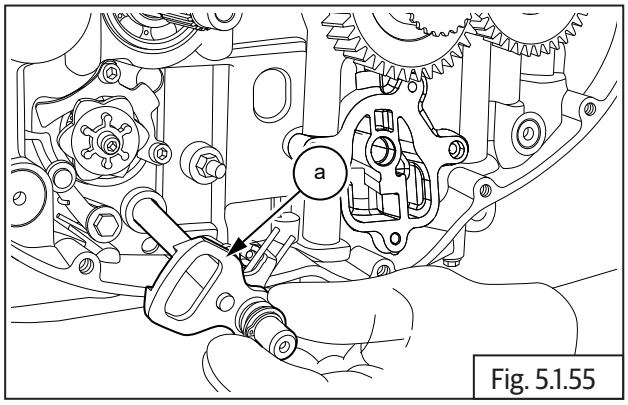

Fig. 5.1.55

- Remove circlip **(a)** from shorter end of shifter shaft **(b)**.

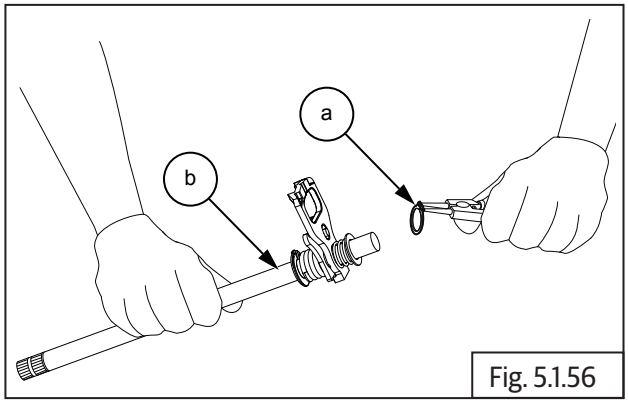

Fig. 5.1.56

	Circlip plier

- Remove washer **(a)** from shorter end of shifter shaft **(b)**.

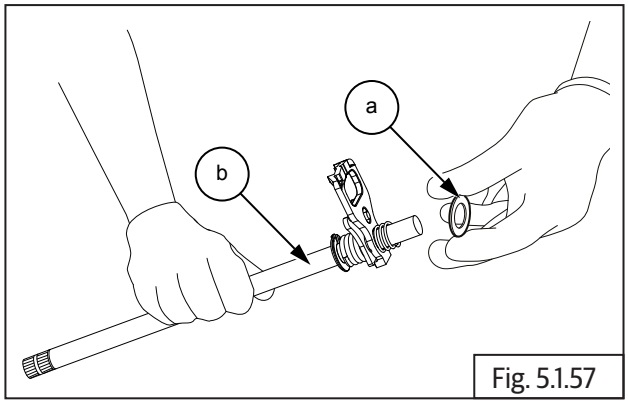

Fig. 5.1.57

- Remove spring **(a)** from shifter shaft **(b)**.

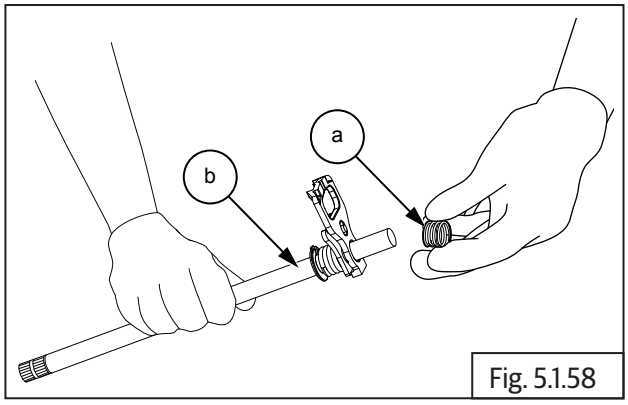

Fig. 5.1.58

- Remove plate **(a)** from shorter end of shifter shaft **(b)**.

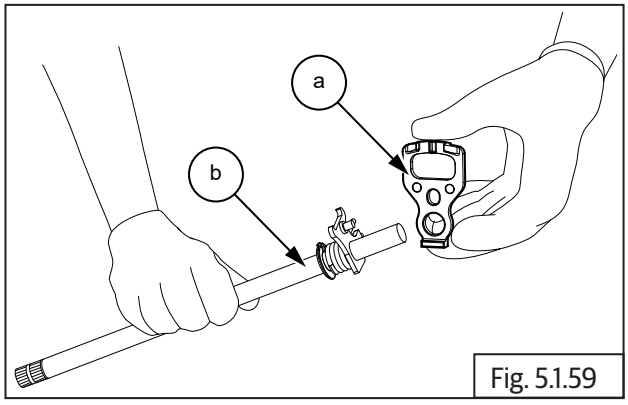

Fig. 5.1.59

- Remove circlip **(a)** from longer end of shifter shaft **(b)**.

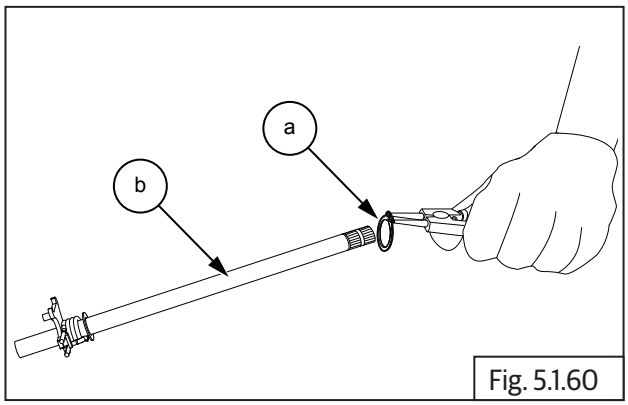

Fig. 5.1.60

	Circlip plier

- Remove washer **(a)** from longer end of shifter shaft **(b)**.

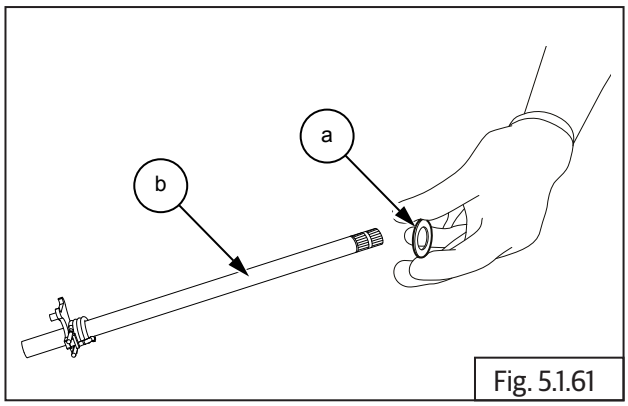

Fig. 5.1.61

- Expand spring lugs and pull out spring **(a)** from longer end of shifter shaft **(b)**.

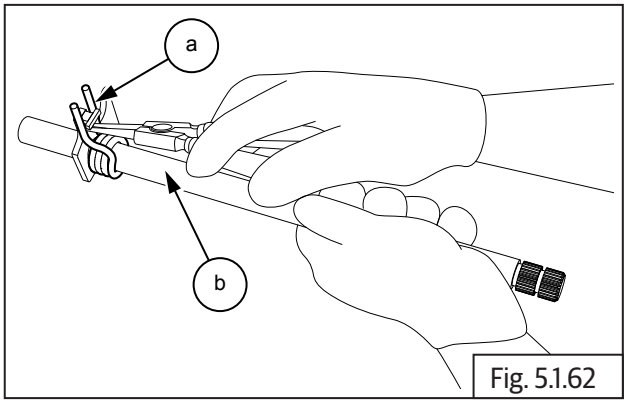

Fig. 5.1.62

	Circlip plier

5.1.23. Stator and GPS Wiring Connectors

NOTE
• *Ensure 2 Nos. black wiring connectors* located on *rear side of engine are disconnected.*

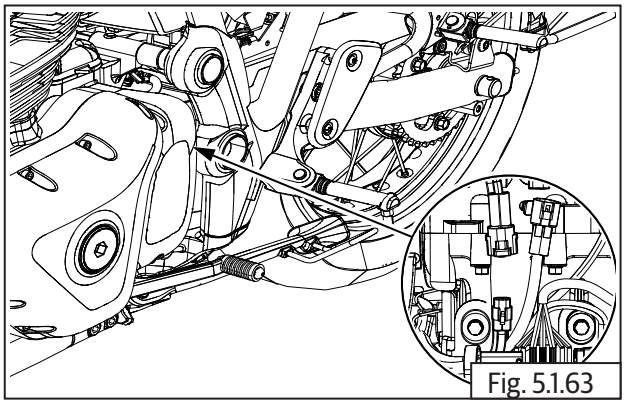
Fig. 5.1.63

5.1.24. FD Sprocket Cover

- Loosen and remove 3 Nos. Hex socket head screws **(M6) (a)** from FD sprocket cover **(b)** on the LH side of engine, in the order shown (1, 2 & 3).

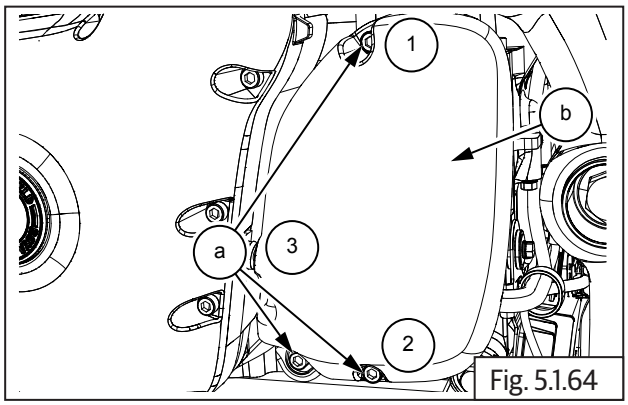

Fig. 5.1.64

	5 mm Allen socket with Ratchet

- Gently pull out FD sprocket cover **(a)**.

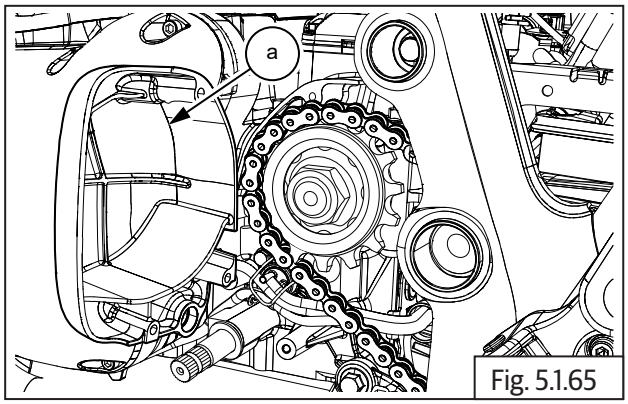

Fig. 5.1.65

5.1.25. Gear Position Sensor (GPS)

- Loosen and remove 2 Nos. Hex flange head bolts **(M6) (a)** to disconnect gear position sensor holder.

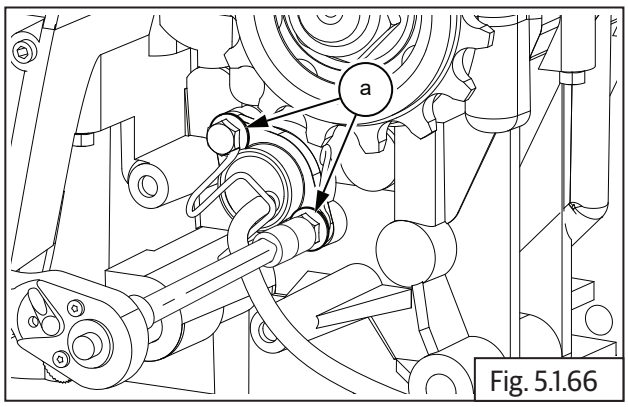

Fig. 5.1.66

	10 mm Socket with Ratchet

- Remove cable holder **(a)**.

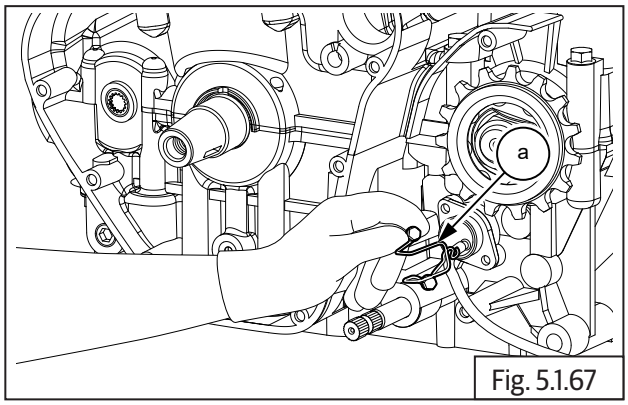

Fig. 5.1.67

- Gently remove the gear position sensor **(a)** along with the gasket.

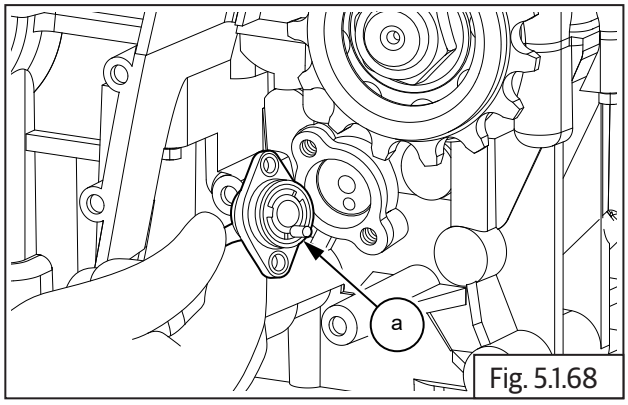

Fig. 5.1.68

5.1.26. FD Sprocket

- Loosen rear wheel and chain adjusters nuts (LH & RH) to increase chain slackness.
- Gently remove chain **(a)** from FD sprocket **(b)**.

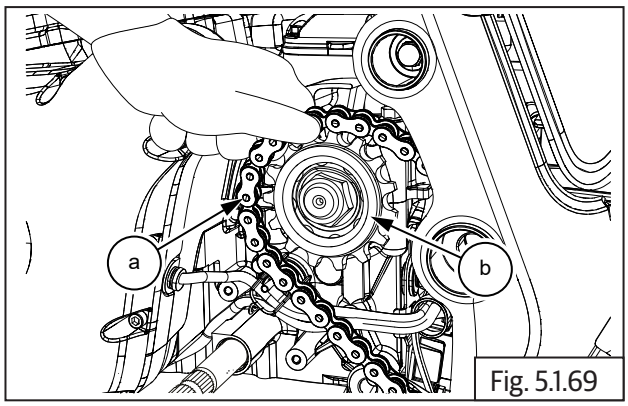

Fig. 5.1.69

- Straighten lock tab washer **(a)** located over FD sprocket **(b)**.

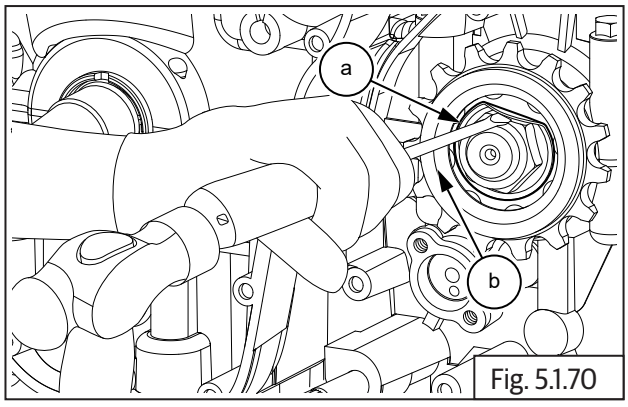

Fig. 5.1.70

	Chisel and Hammer

- Locate special tool over FD sprocket **(a)** and loosen hex "U" nut **(M20) (b)**.

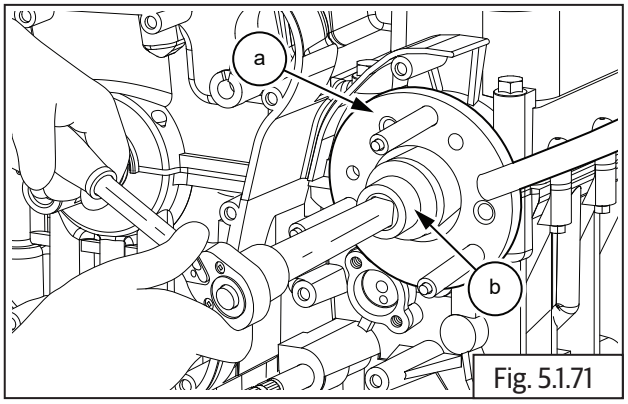

Fig. 5.1.71

SPL	Part No: ST-27534-2
	Part Name: FD sprocket holder

	30 mm Socket with Ratchet

- Remove lock tab washer **(a)** from shaft.

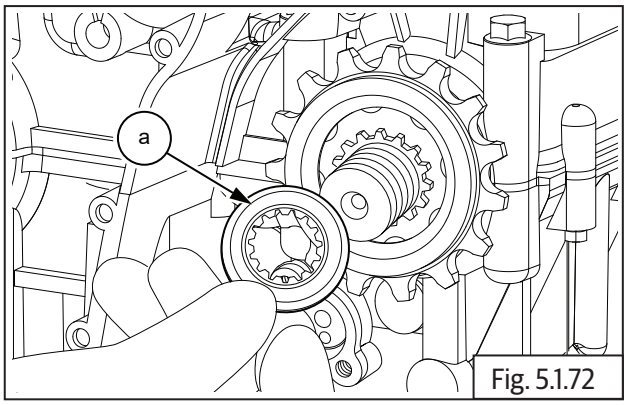

Fig. 5.1.72

- Remove FD sprocket **(a)** from drive shaft **(b)**.

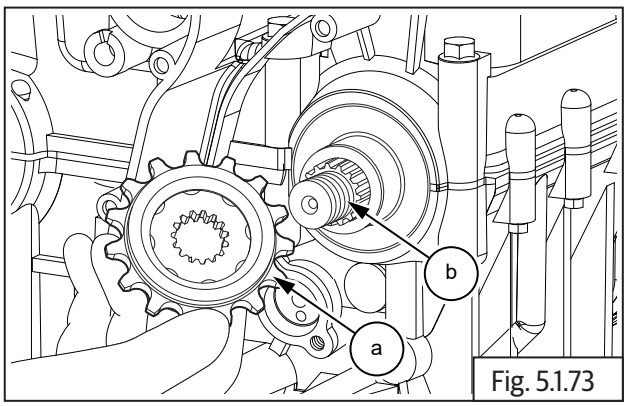

Fig. 5.1.73

- Gently remove spacer **(a)** from drive shaft.

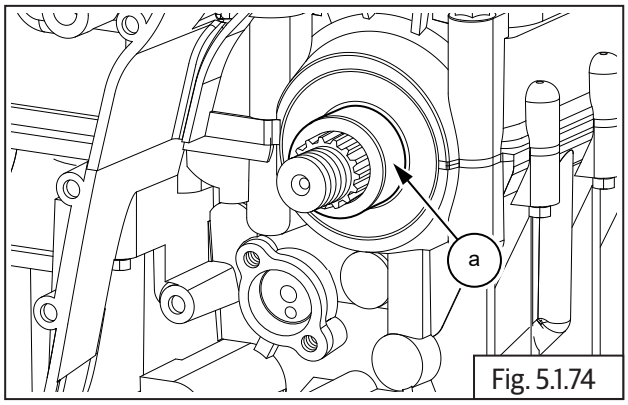

Fig. 5.1.74

- Remove oil seal **(a)** from drive shaft.

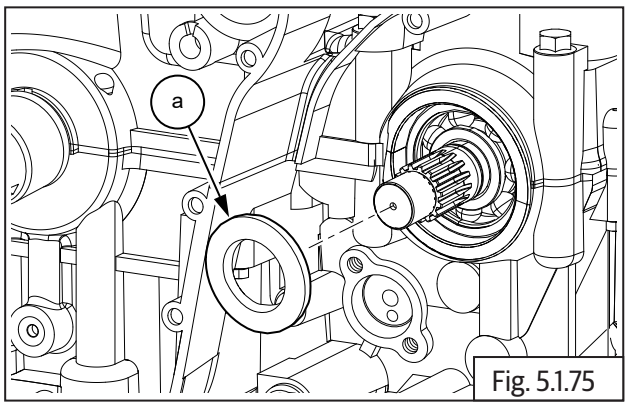

Fig. 5.1.75

5.1.27. Cylinder Head Cover

- Remove the following parts:
  - Side panels LH and RH.
  - Rider seat assembly.
  - Fuel tank assembly. Ensure the fuel is drained completely.
- Loosen ABS modulator bracket and support it suitably above the frame.
- Remove Horn assembly .
- Loosen ignition coil from frame and support suitably.

⚠ WARNING

Gasoline is extremely flammable and highly explosive. Please handle with care. Improper handling can lead to fatal accident OR serious injury. Always drain/fill fuel only in a well ventilated area.

Ensure there is no scope for flames OR sparks near by while draining/filling fuel.

- Loosen and remove 4 Nos. Hex flange head bolts **(M6) (a)** in crisscross pattern along with the rubber seals and washers.

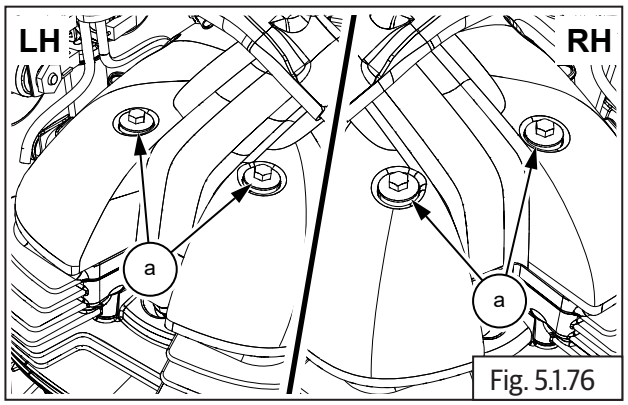

Fig. 5.1.76

	8 mm Socket with Ratchet

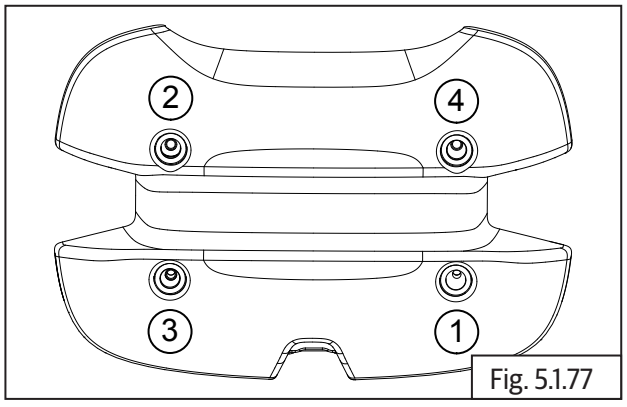

Fig. 5.1.77

- Gently remove rocker cover **(a)** from cylinder head **(b).**

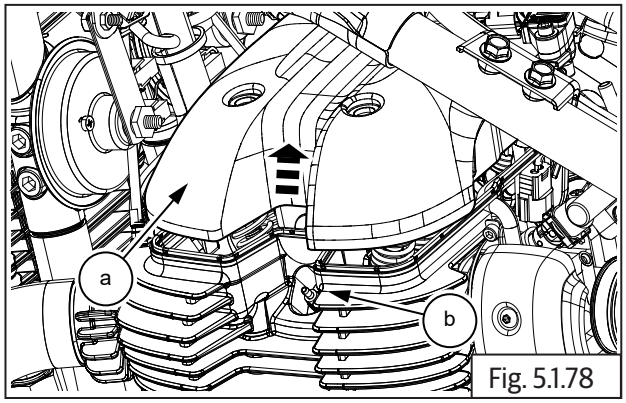

Fig. 5.1.78

- Remove rubber gasket **(a)** from rocker cover **(b)**.

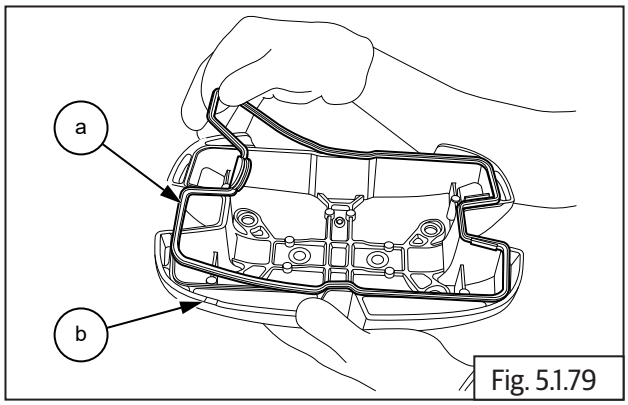

Fig. 5.1.79

5.1.28. Crankshaft Plug On Magneto Cover

- Remove crankshaft hole plug **(M34) (a)** from center of magneto cover **(b)**.

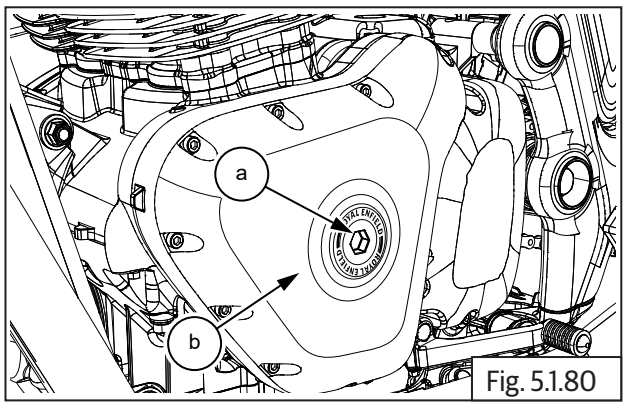

Fig. 5.1.80

	14 mm Allen Socket with Ratchet

- Remove O-ring **(a)** from crankshaft hole plug **(b)**.

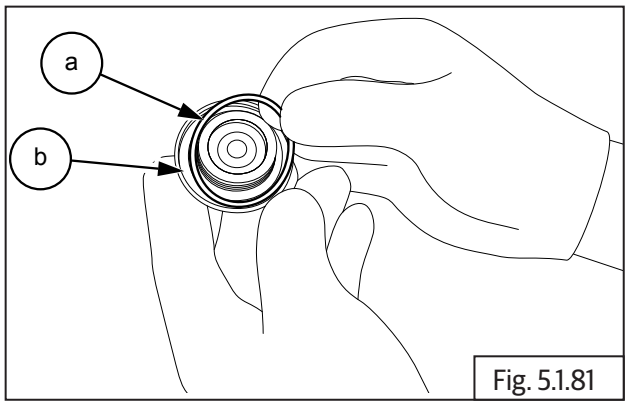

Fig. 5.1.81

5.1.29. Rocker Carrier LH from Cylinder Head

- Slowly rotate the magneto rotor until the reference mark "L" on the camshaft aligns with the cylinder head on the left-hand side.

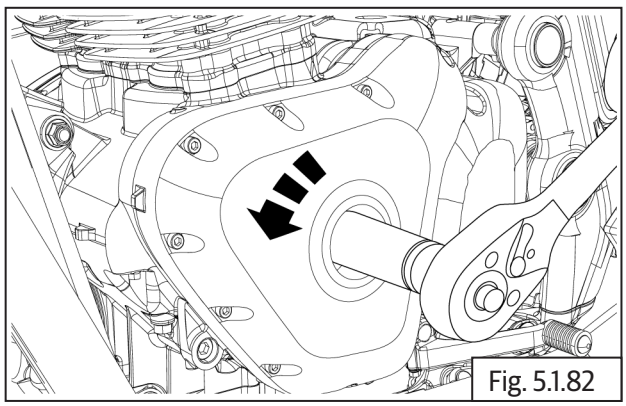
Fig. 5.1.82

	17 mm Socket with Ratchet

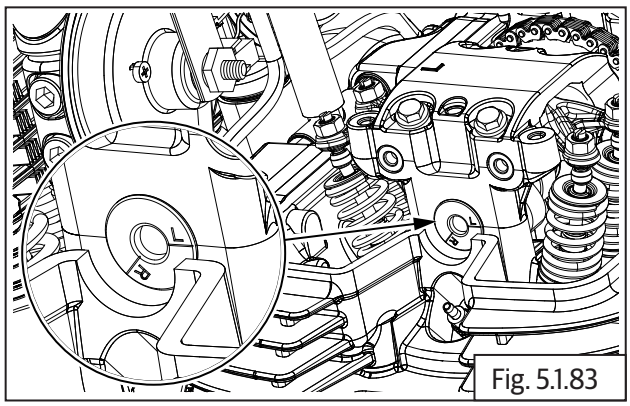

Fig. 5.1.83

- Loosen and remove 4 Nos. Hex flange head bolts **(M6) (a)** from rocker carrier LH.

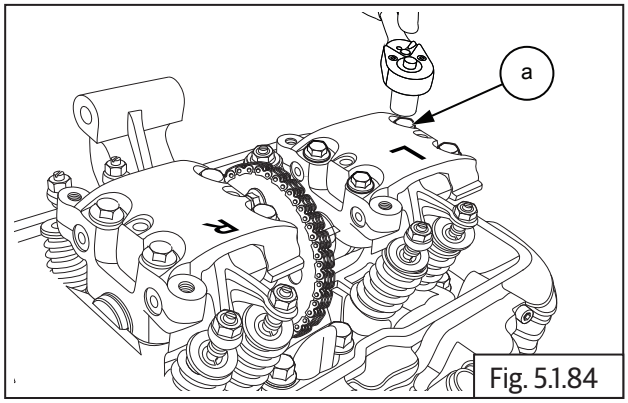

Fig. 5.1.84

	10 mm Socket with Ratchet

- Gently remove the rocker carrier LH **(a)** along with rocker arms from cylinder head.

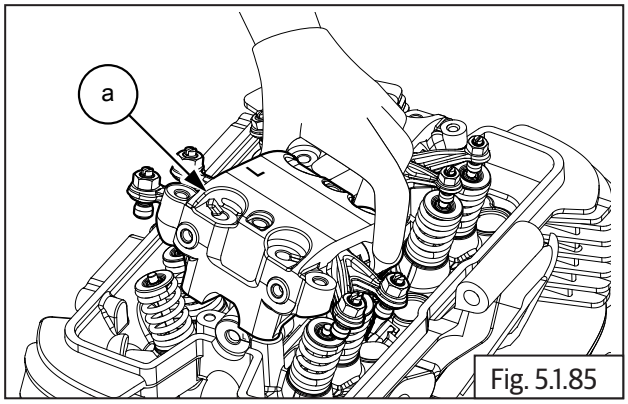

Fig. 5.1.85

- Thread in a suitable Hex flange bolt **(M6) (a)** into the rocker shaft and gently pull out the rocker shaft from rocker carrier LH **(b)**.
- Remove the rocker arms from carrier LH.

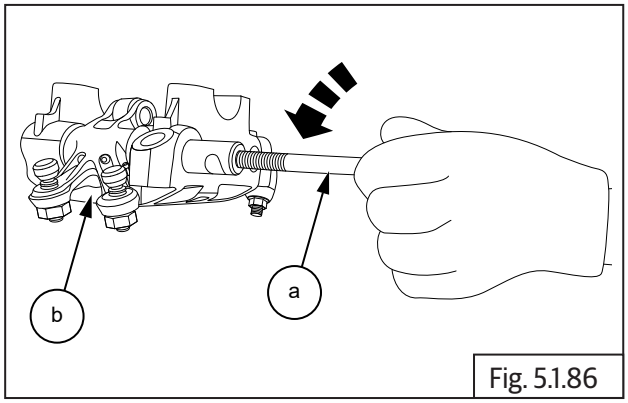

Fig. 5.1.86

5.1.30. Rocker Carrier RH from Cylinder Head

- Rotate magneto rotor **(a)** slowly and ensure reference mark "R" in camshaft **(a)** is aligned with cylinder head on the LH side.

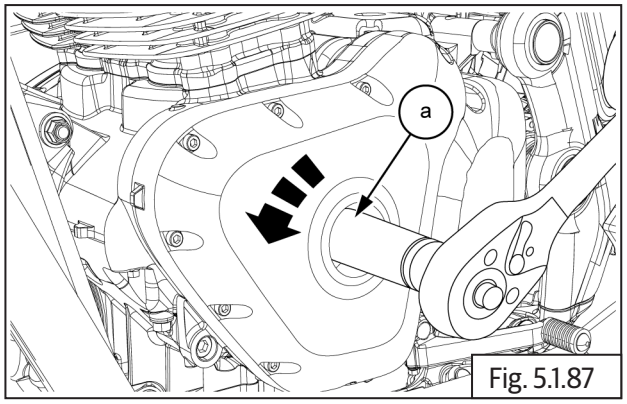

Fig. 5.1.87

	17 mm Socket with Ratchet

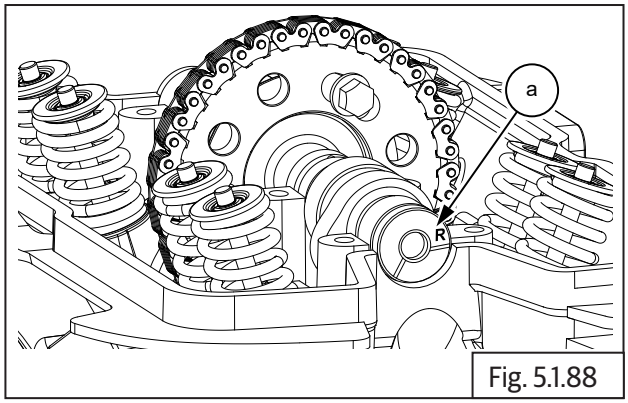

Fig. 5.1.88

- Loosen and remove 4 Nos. Hex head bolts **(M6) (a)** from rocker carrier RH and remove carrier along with rocker arms from cylinder head.

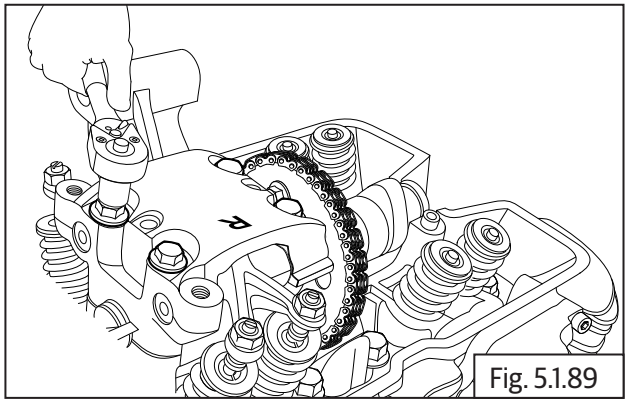

Fig. 5.1.89

	10 mm Socket with Ratchet

- Thread in a suitable Hex flange bolt **(M6) (a)** into the rocker shaft and gently pull out the rocker shaft from rocker carrier RH **(b)**.
- Remove the rocker arms from carrier RH.

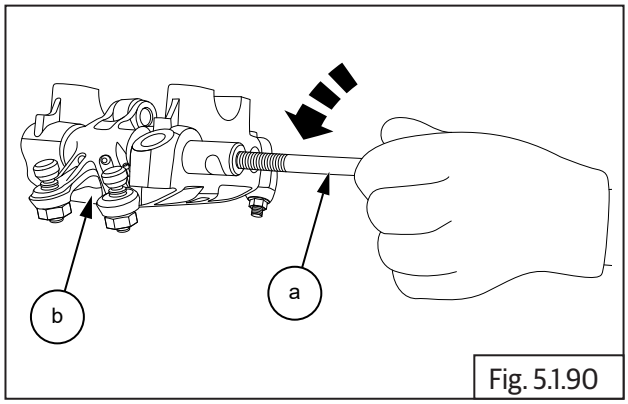

Fig. 5.1.90

5.1.31. Auto Chain Tensioner

- Loosen and remove Hex flange head bolt **(M6) (a)** from the auto chain tensioner.

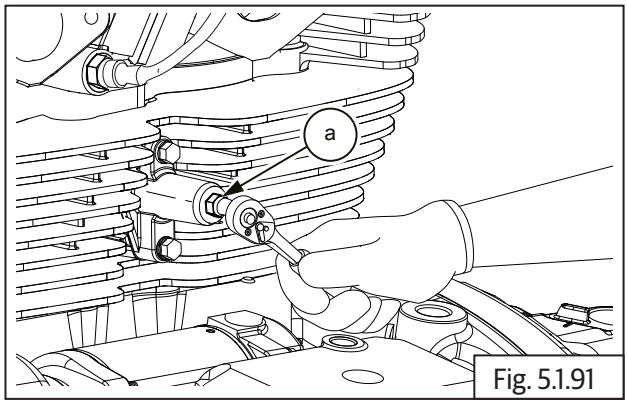

Fig. 5.1.91

	10 mm Socket with Ratchet

- Loosen and remove 2 Nos. Hex flange head bolts **(M6) (a)** to remove auto chain tensioner from cylinder barrel **(b)**.

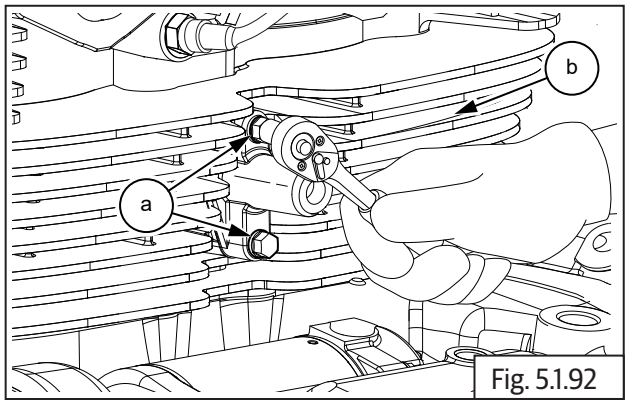

Fig. 5.1.92

	10 mm Socket with Ratchet

- Remove auto timing chain tensioner **(a)** from cylinder barrel along with gasket.

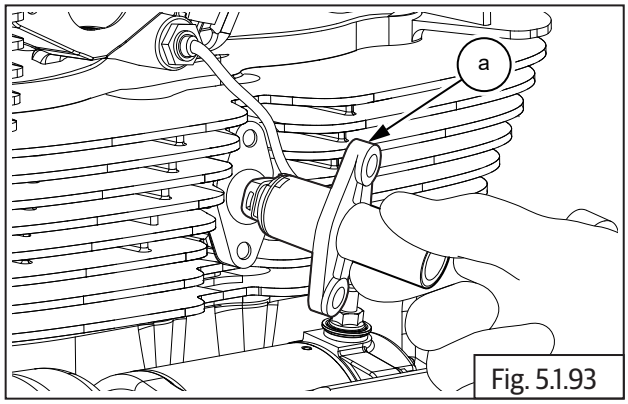

Fig. 5.1.93

5.1.32. Camshaft Sub Assembly

- Rotate magneto rotor **(a)** till one of Hex head bolts on cam chain sprocket appears at top most position.

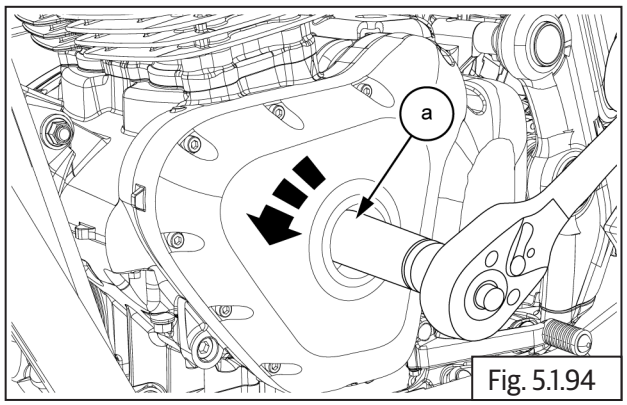

Fig. 5.1.94

	17 mm Socket with Ratchet

- Loosen and remove 1st Hex flange head bolt **(M8) (a)** from cam sprocket.

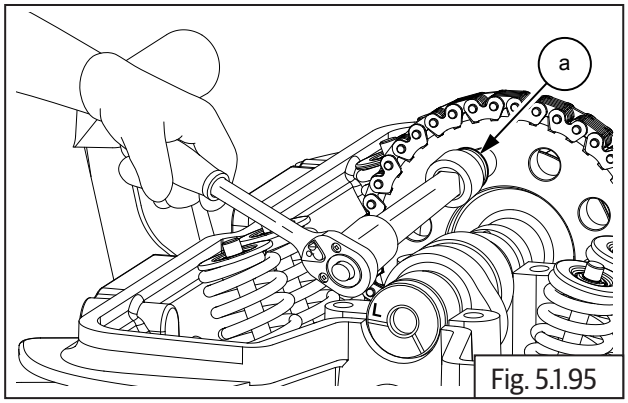

Fig. 5.1.95

	12 mm Socket with Ratchet

- Rotate magneto rotor **(a)** slowly till other bolt is visible at top most position.

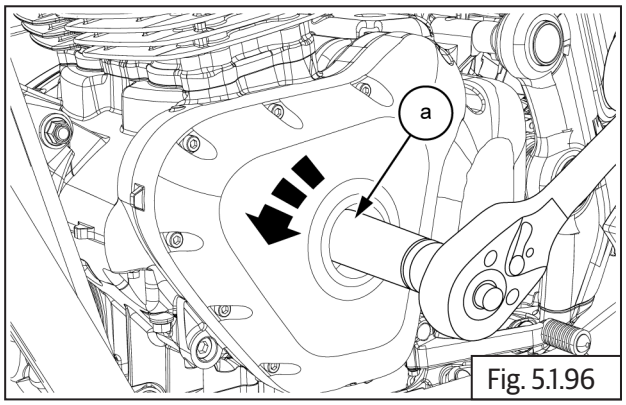

Fig. 5.1.96

	17 mm Socket with Ratchet

- Loosen and remove 2nd Hex head bolt **(M8) (a)** from cam sprocket.

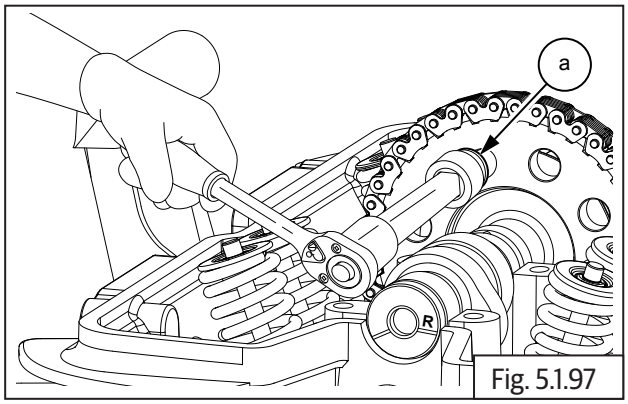

Fig. 5.1.97

	12 mm Socket with Ratchet

- Remove "C" washer **(a)** from groove in cylinder head LH to release cam shaft.

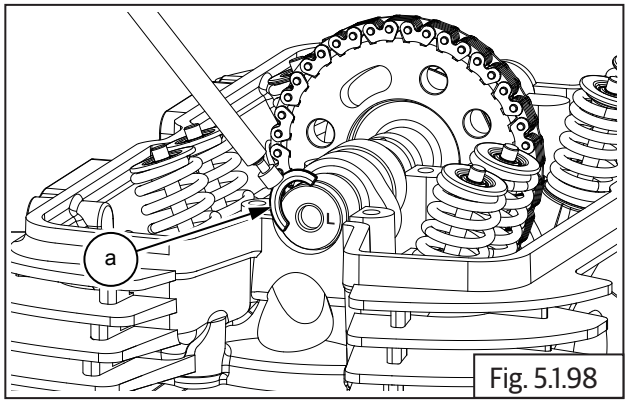

Fig. 5.1.98

	Magnetic stick

- Gently release the cam chain **(a)** from the cam sprocket **(b)**.

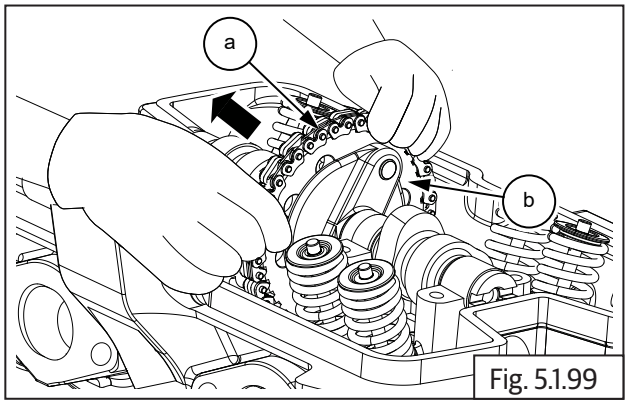

Fig. 5.1.99

- Gently lift camshaft with sprocket **(b)** and remove from cylinder head.
- Support cam chain **(a)** suitably while removing camshaft, to prevent it from falling into crankcase.

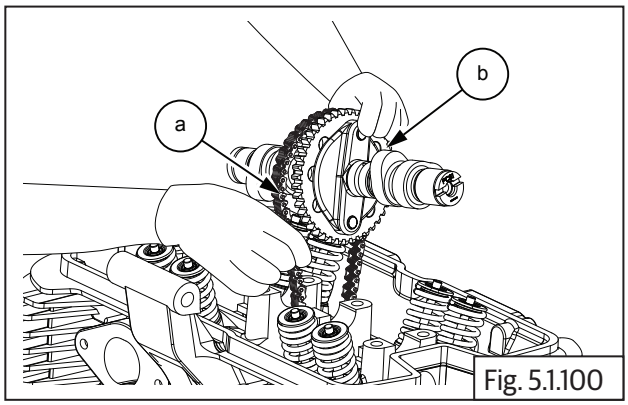

Fig. 5.1.100

- Remove sprocket **(a)** from camshaft.

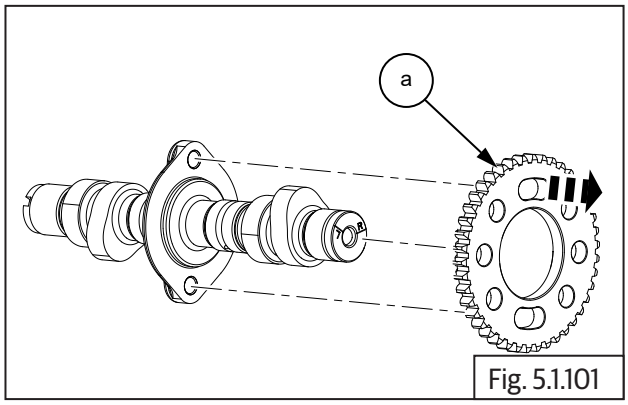

Fig. 5.1.101

5.1.33. Magneto Cover

- Loosen and remove 12 Nos. Hex socket head bolts **(M6) (a)** in crisscross pattern to remove magneto cover **(b)** from crankcase on LH side.

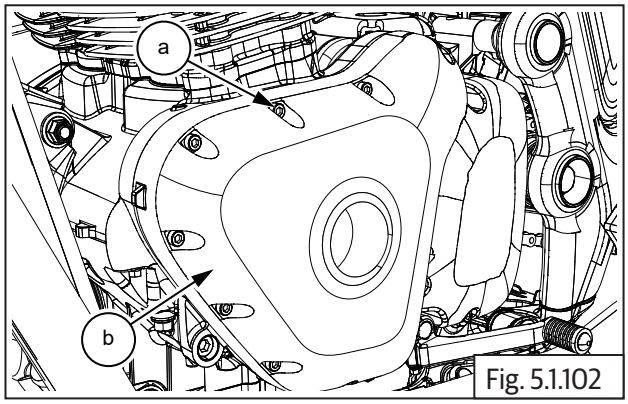

Fig. 5.1.102

	5 mm Allen socket with Ratchet

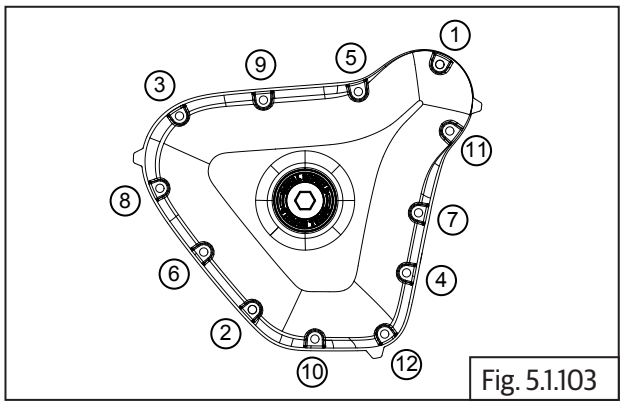

Fig. 5.1.103

- The magneto cover may be hard to remove from crankcase, due to the magnetic force from the magneto acting on the stator coil.
- Gently tap on the tabs **(a)** with a plastic / rubber mallet, on the inside edges of the magneto cover, to remove.

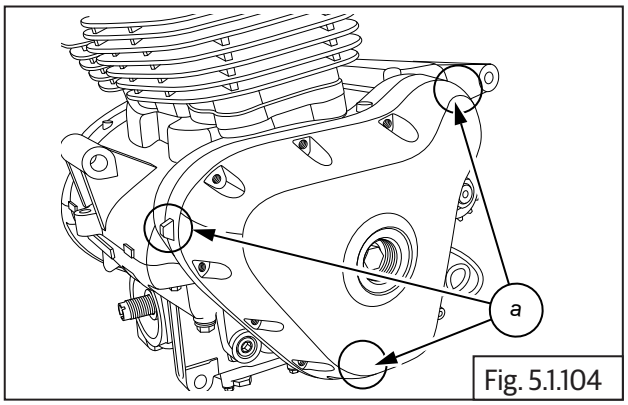

Fig. 5.1.104

	Plastic/Rubber mallet

- Remove the 2 Nos. dowel pins **(a)** and **(b)** from the crankcases/magneto cover.

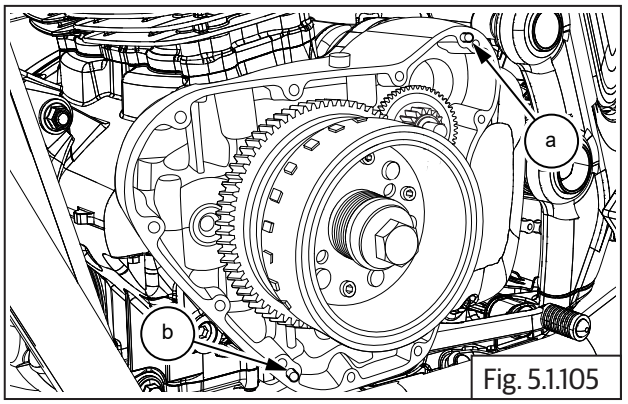

Fig. 5.1.105

- Remove gasket **(a)**.

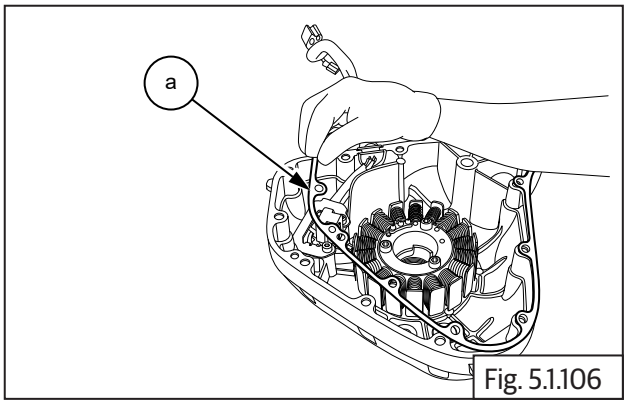

Fig. 5.1.106

⚠ CAUTION

Do not use a sharp tool to scrap the gasket material from the joint faces.

If required scrap only with a soft and blunt tool.

5.1.34. Stator Assembly with CPS

Stator Assembly with Crank Position Sensor

- Loosen and remove 3 Nos. Hex socket head screws **(M6) (a)** holding the stator assembly **(b)**.

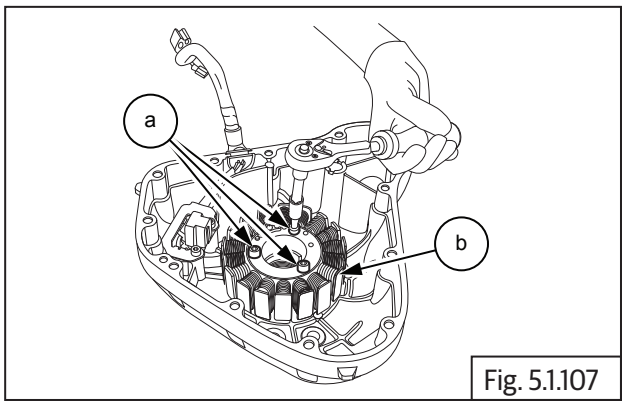

Fig. 5.1.107

	5 mm Allen socket with Ratchet

- Loosen and remove 2 Nos. Hex socket head screws **(M5) (a)** on guide plate **(b)** holding crank position sensor to magneto cover.

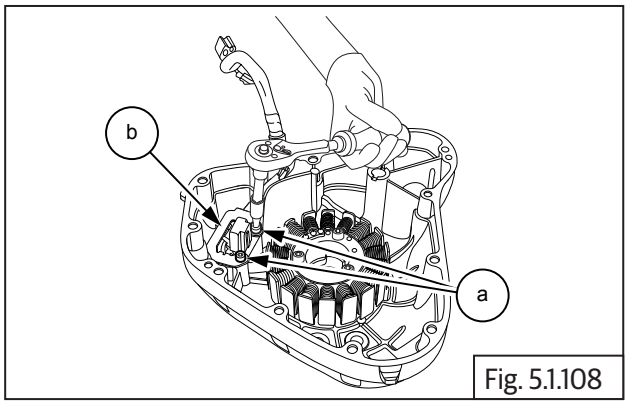

Fig. 5.1.108

	5 mm Allen socket with Ratchet

- Remove guide plate **(a)** from magneto cover sub assembly.

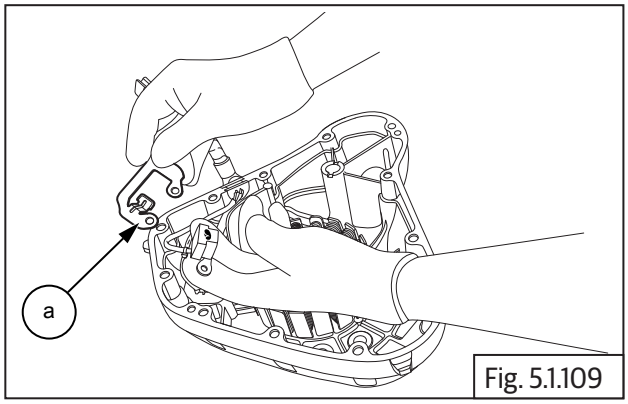

Fig. 5.1.109

- Gently release wiring grommet **(a)** from magneto cover.
- Gently remove stator assembly **(b)** from magneto cover.

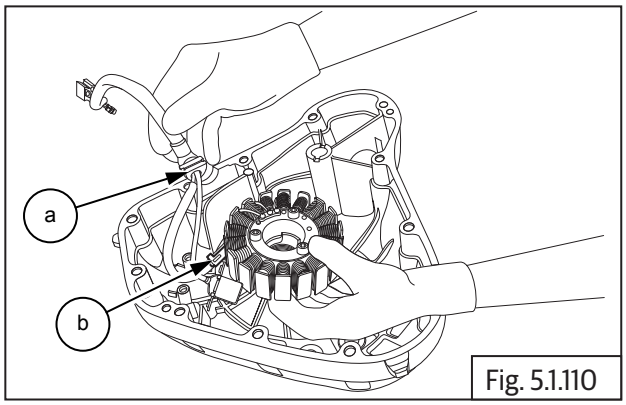

Fig. 5.1.110

5.1.35. Magneto Rotor Bolt

- In order to loosen magneto rotor bolt, it will be necessary to remove clutch cover.
- Ensure LH piston is at TDC on compression stroke.
- Insert special tool **(a)** in crankcase RH to lock the crankshaft and prevent rotation.

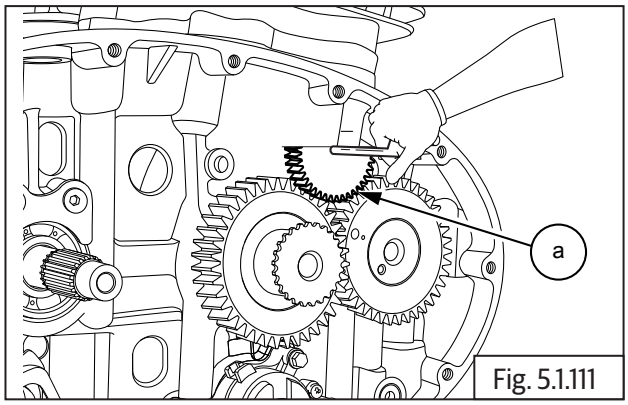

Fig. 5.1.111

SPL 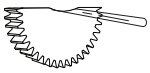	Part No: ST-27533-2 Part Name: Crank Gears Locking Tooll

- Loosen and remove Hex flange head bolt **(M12) (a)**.

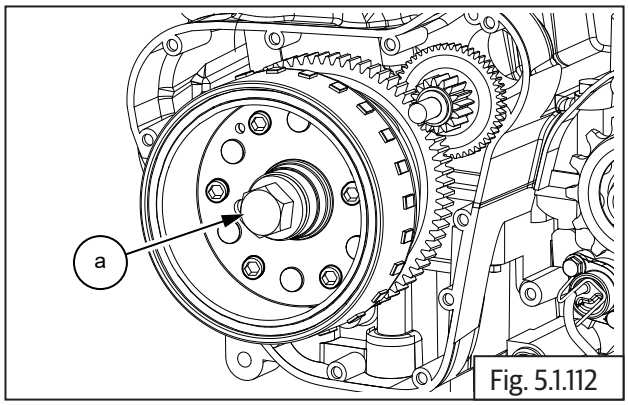

Fig. 5.1.112

	17 mm Socket with Ratchet

- Ensure center bolt of magneto rotor puller is loosened sufficiently.
- Assemble puller **(b)** on magneto rotor **(a)** and thread it in fully.
- Tighten center bolt onto puller till magneto rotor gets released from crankshaft.

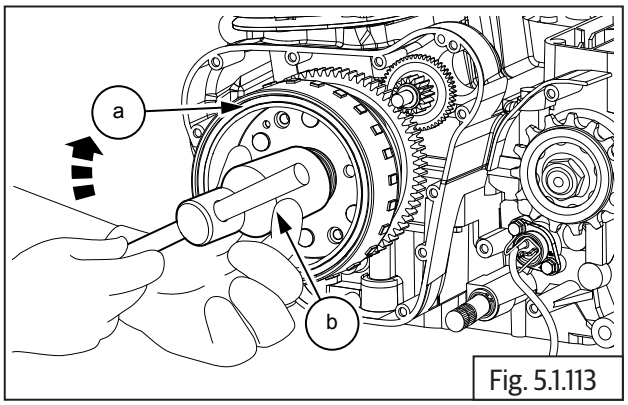

Fig. 5.1.113

SPL 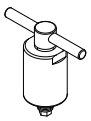	Part No: ST-30274-A Part Name: Magneto Puller Assembly

- Gently pull out magneto rotor assembly **(a)** with starter clutch.

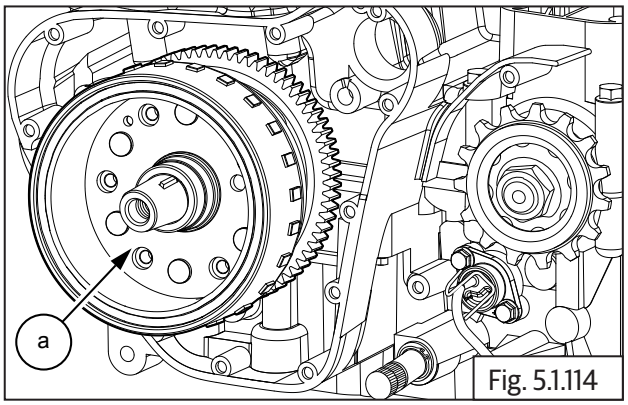

Fig. 5.1.114

- Remove woodruff key **(a)** from crankshaft.

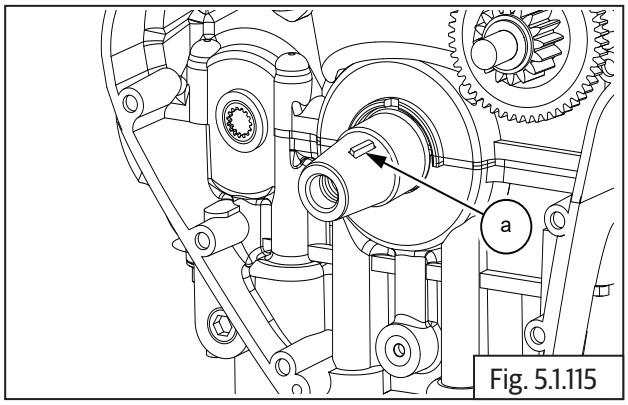

Fig. 5.1.115

5.1.36. Starter Clutch from Magneto Rotor

- Slightly loosen 6 Nos. Hex socket head screws **(M6) (a)** from inside magneto rotor. **DO NOT LOOSEN AND REMOVE FULLY**.

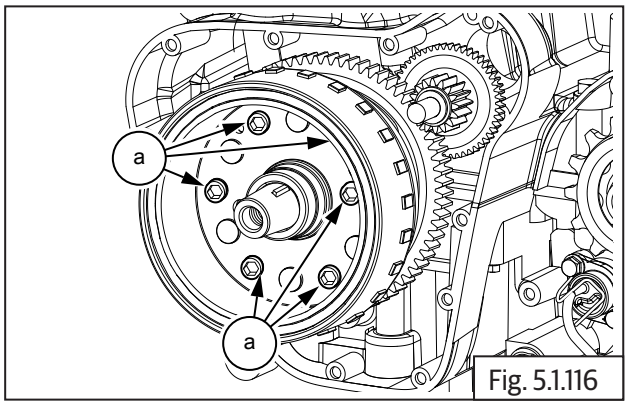

Fig. 5.1.116

	5 mm Allen socket with Ratchet

- Remove magneto rotor assembly **(a)** from carnk shaft, hold the rotor firmly, rotate gear starter clutch **(b)** anti-clockwise and pull out simultaneously to separate rotor from the gear.

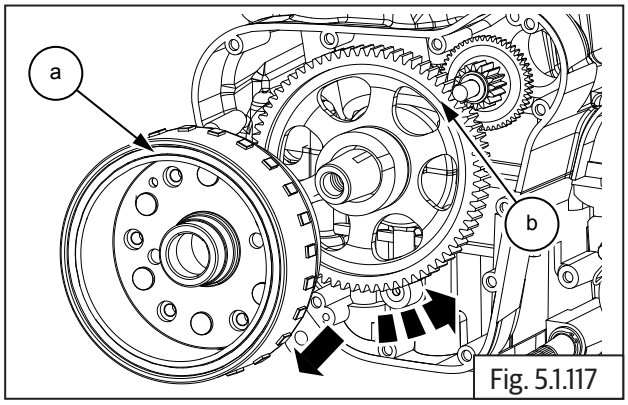

Fig. 5.1.117

- Remove starter idle gear **(a)**.

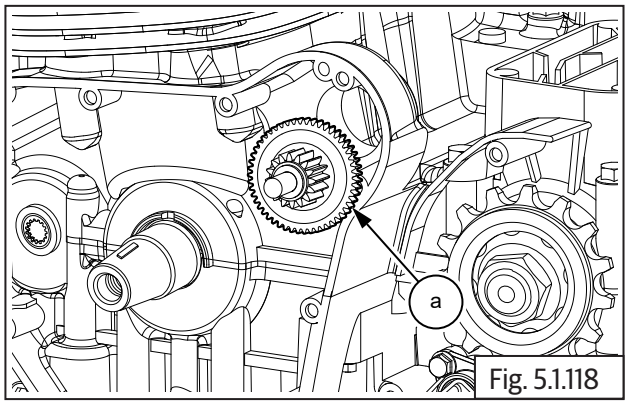

Fig. 5.1.118

- Loosen and remove 6 Nos. Hex socket head screws **(M6) (a)** from inside magneto rotor **(b)** and separate one way clutch with outer ring **(c)**.
- Remove one way clutch from outer ring.

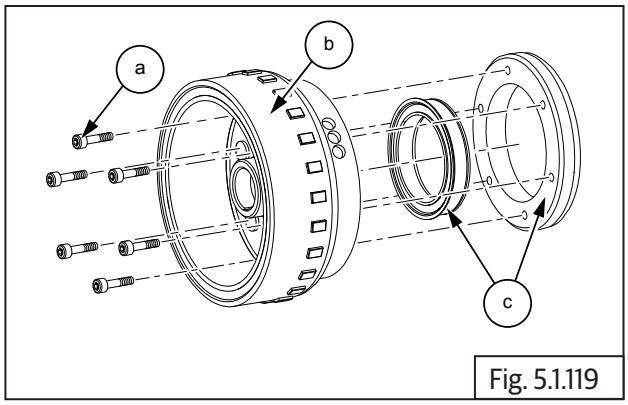

Fig. 5.1.119

	5 mm Allen socket with Ratchet

5.1.37. Cylinder Head

- Remove exhaust pipe and silencers LH and RH.
- Loosen and remove 8 Nos. Hex head long bolts **(M10) (a)** in crisscross pattern on cylinder head.

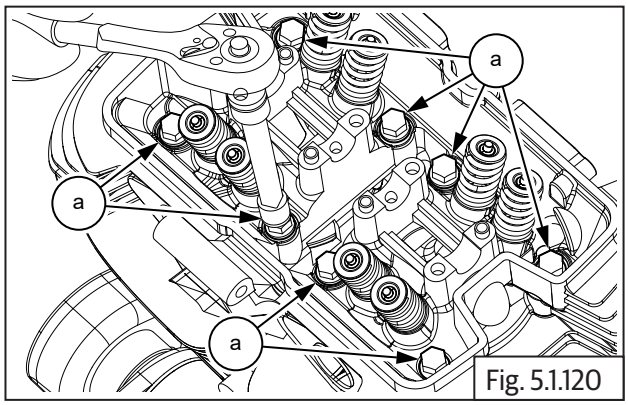

Fig. 5.1.120

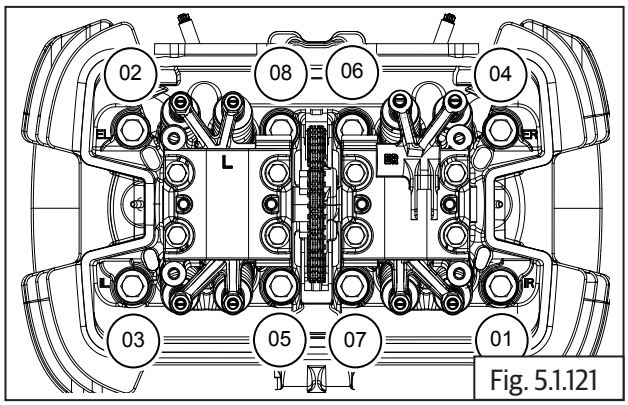

Fig. 5.1.121

	14 mm Socket with Ratchet

- Support cam chain suitably and gently remove cylinder head **(a)** from cylinder barrel **(b)**.

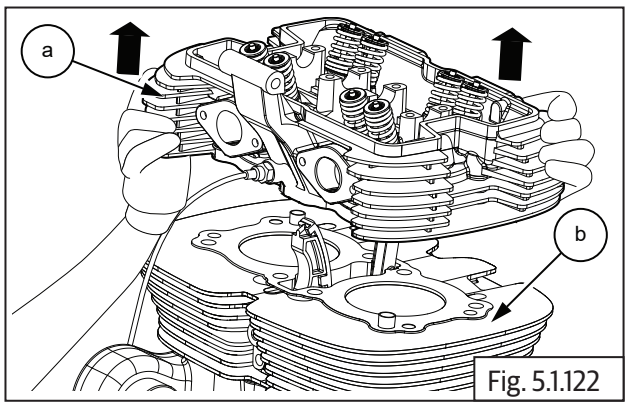

Fig. 5.1.122

- Remove the cylinder head gasket **(a)** from cylinder barrel **(b)**.

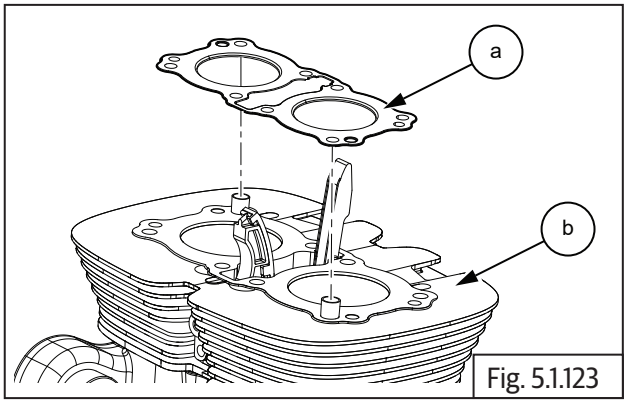

Fig. 5.1.123

5.1.38. Components from Cylinder Head

Valves and Springs

- Compress valve spring with special tool **(a).**

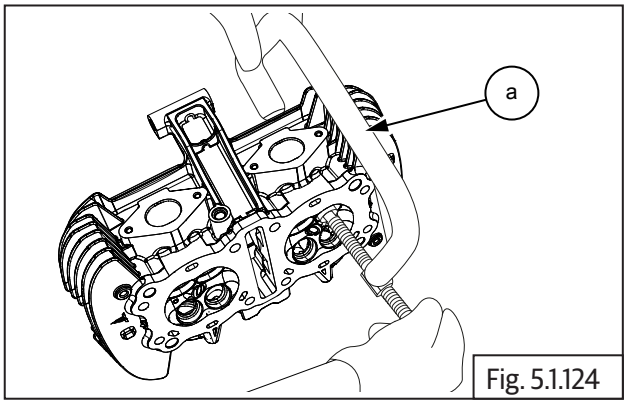

Fig. 5.1.124

SPL	Part No: ST-27528-2
	Part Name: Valve spring compressor

- Remove the cotters **(a)** on valve stem at the top.

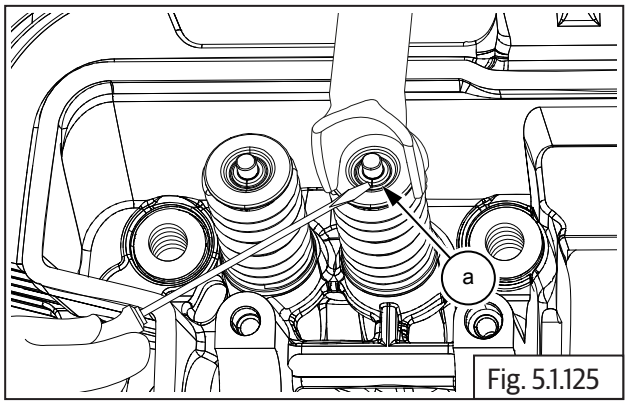

Fig. 5.1.125

SPL 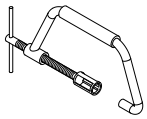	Part No: ST-27528-2
	Part Name: Valve spring compressor

- Gently loosen the screw on valve spring compressor, till the valve spring tension is completely released and remove the special tool.

⚠ CAUTION

Valve spring will be under high tension when compressed.

Release valve spring compressor tool slowly and with care.

- Remove the retainer, valve spring **(a)** form the top of the valve spring **(b)**.

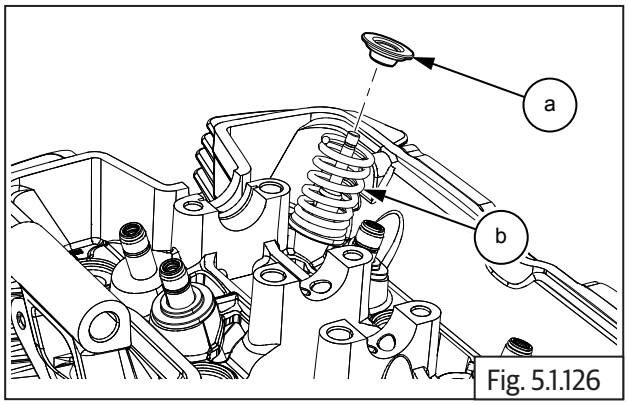

Fig. 5.1.126

- Remove valve spring **(a)** from valve stem **(b)** & valve seat **(c)**.

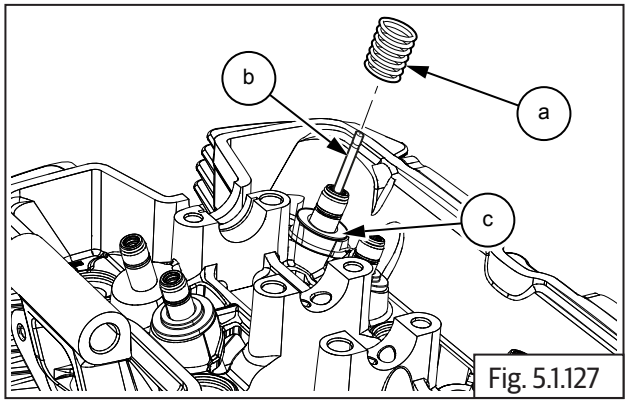

Fig. 5.1.127

- Remove valve **(a)** from cylinder head **(b)** by pulling it out from the cylinder head inside.

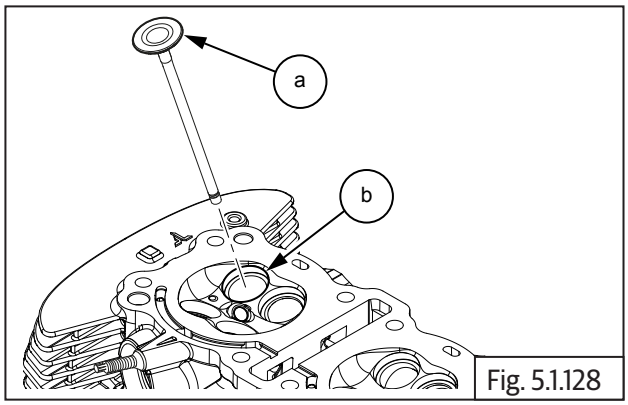

Fig. 5.1.128

- Remove valve stem seal **(a)** from valve guide **(b)**.

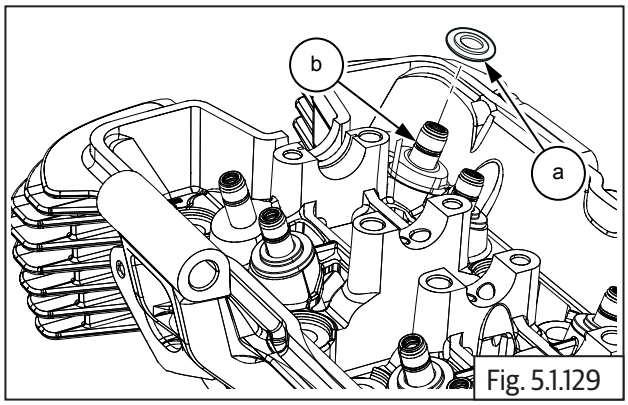

Fig. 5.1.129

- Follow the same procedure to remove the other

valves from the cylinder head.

5.1.39. Floating Chain Pad

- Remove the floating chain pad **(a)** from front end of the cylinder barrel.

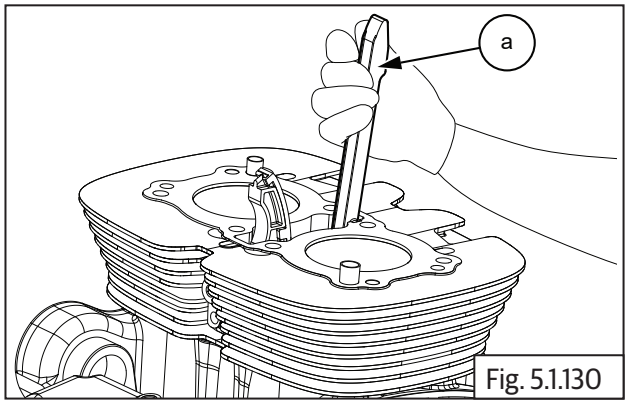

Fig. 5.1.130

5.1.40. Cylinder Barrel

- Support cam chain suitably.
- Gently remove cylinder barrel **(a)** from crankcase **(b)**.

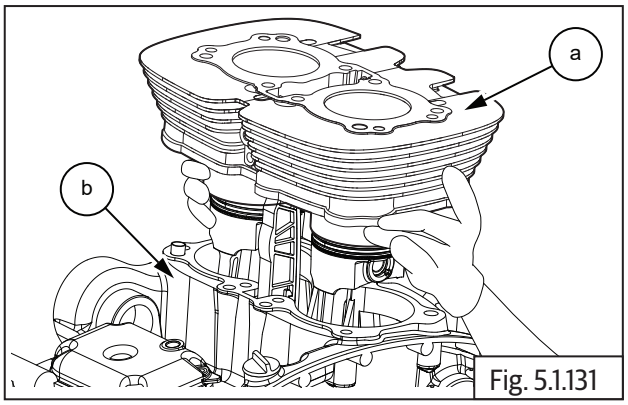

Fig. 5.1.131

5.1.41. Pistons

- Remove the circlip **(a)** from outer side of piston RH.

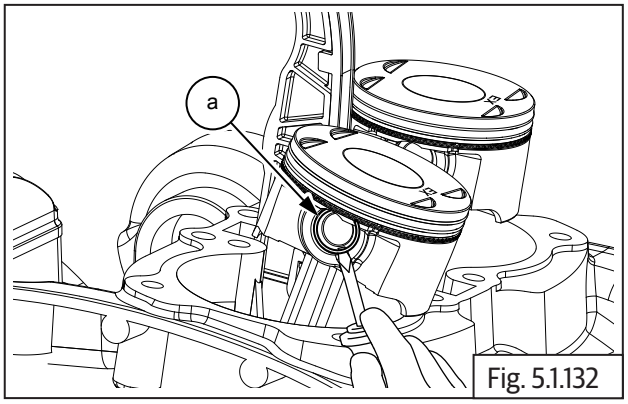

Fig. 5.1.132

	Screw driver

- Gently push out gudgeon pin **(a)** from inner side of piston RH and ensure it has completely come out of the connecting rod, to release piston RH from the connecting rod.

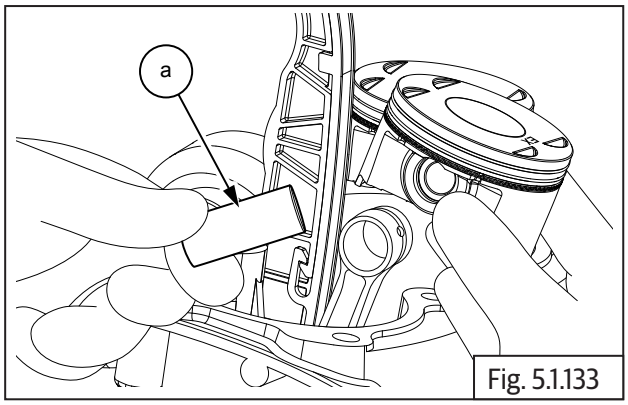

Fig. 5.1.133

- Repeat above procedure for removing piston LH.

5.1.42. Oil Pressure Switch

- Ensure engine oil is drained completely.
- Loosen and remove pressure switch **(a)** along with washers **(b)** from bottom of the crankcase RH.

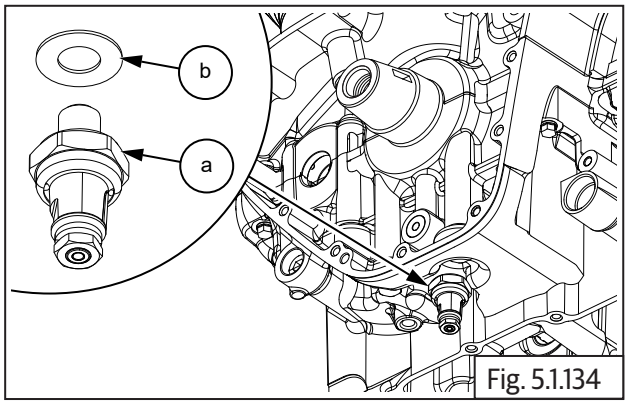

Fig. 5.1.134

	21 mm Socket with Ratchet

5.1.43. Oil Pan

- Loosen and remove the 13 Nos. Hex bolts **(M6) (a)** in crisscross pattern from sump.

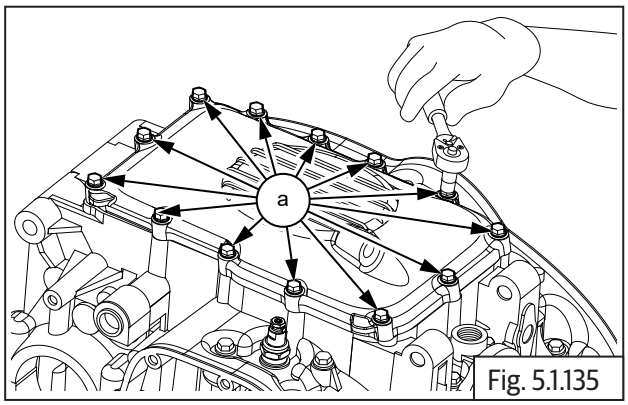

Fig. 5.1.135

	10 mm Socket with Ratchet

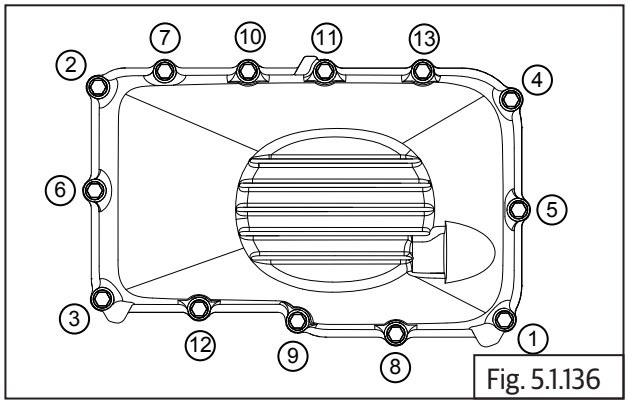

Fig. 5.1.136

- Remove sump cover **(a)** along with gasket **(b)** from bottom crankcase.

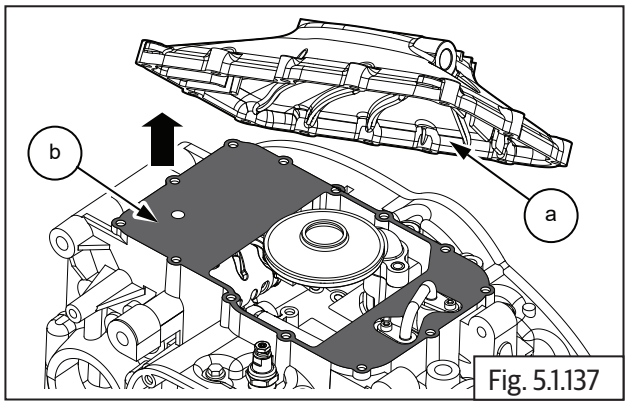

Fig. 5.1.137

5.1.44. Oil Strainer

- Loosen and remove 2 Nos. Hex flange head bolts **(M6) (a)** to remove oil strainer **(b)** along with O-ring **(c)**.

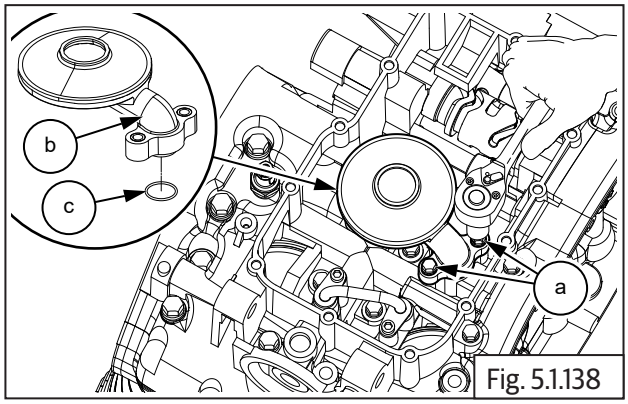

Fig. 5.1.138

	10 mm Socket with Ratchet

⚠ CAUTION
DO NOT reuse O-ring. Always use new O-ring during installation

5.1.45. Oil Bypass

- Loosen and remove Hex socket head cap screw **(M6) (a)** to remove bypass **(b)** from crankcase.
- Remove the O - rings with the bypass pipe.

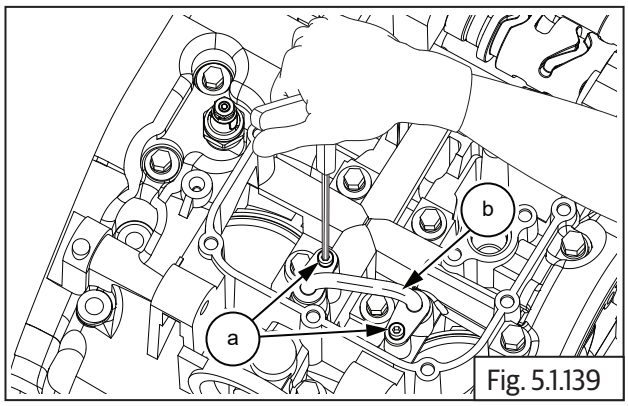

Fig. 5.1.139

	5 mm Allen Socket with Ratchet

COMPONENTS THAT CAN BE ASSEMBLED ON ENGINE WITHOUT REMOVING FROM FRAME

CONTENTS **PAGE**

5.2 Components Assembly on Engine 82

5.2.1. Oil Bypass 82
5.2.2. Oil Strainer 82
5.2.3. Oil Pan 82
5.2.4. Oil Pressure Switch 83
5.2.5. Drain Plug 83
5.2.6. Oil Filter 84
5.2.7. Piston Rings on Piston 84
5.2.8. Pistons on Connecting Rods 85
5.2.9. Cylinder Barrel Dowels on Crankcase 86
5.2.10. Cylinder Barrel Gasket on Crankcase 86
5.2.11. Piston LH in Cylinder Barrel 86
5.2.12. Piston RH in Cylinder Barrel 87
5.2.13. Cylinder Head Gasket on Cylinder Barrel 88
5.2.14. Floating Chain Pad 88
5.2.15. Components in Cylinder Head 89
5.2.16. Cylinder Head on Cylinder Barrel 90
5.2.17. Starter Clutch to Magneto Rotor 92
5.2.18. Woodruff Key on Crankshaft 92
5.2.19. Magneto Rotor on Crankshaft 92
5.2.20. Camshaft Sub Assembly 93
5.2.21. Timing Chain Tensioner 96
5.2.22. Rocker Arms in Carriers LH and RH 97
5.2.23. Rocker Carrier on Cylinder Head LH 97
5.2.24. Rocker Carrier on Cylinder Head RH 98
5.2.25. Tappet Clearance Adjustment 99
5.2.26. Cover Cylinder Head 100
5.2.29. Inlet Manifold Rubber Flanges LH & RH 102
5.2.30. Throttle Body 103
5.2.31. Air Filter Hoses On Throttle Body 103
5.2.32. Throttle Cables 104
5.2.33. Injector, TPS, MAPS, ISC Connections 104

CONTENTS PAGE

5.2.34. Throttle Body Covers on LH and RH 104
5.2.35. Spark Plugs 105
5.2.36. Spark Plug Suppressor Caps 105
5.2.37. Star Index 106
5.2.38. Star Index Stopper 106
5.2.39. Shifter Selector Shaft 108
5.2.40. Oil Pump 110
5.2.41. Clutch Assembly 110
5.2.42. Oil Level Window on Clutch Cover 114
5.2.43. Clutch Actuating Lever Assembly 114
5.2.44. Clutch Cover 115
5.2.45. Arm Clutch Actuating Lever 116
5.2.46. Clutch Cable on Clutch cover 116
5.2.47. FD Sprocket 117
5.2.48. Rear Chain to FD Sprocket 118
5.2.49. Gear Position Sensor (GPS) 118
5.2.50. Magneto Cover Sub Assembly 119
5.2.51. Magneto Cover on Crankcase 120
5.2.52. Magneto / Gear position switch wiring couplers 121
5.2.53. FD Sprocket Cover 121
5.2.54. Gear Shift Linkage 121
5.2.55. Starter Motor 122
5.2.56. Starter Motor Connections 122
5.2.57. Breather Box 122
5.2.58. Breather Hose Connections 123
5.2.59. Engine Oil Filling 123

5.2 Components Assembly on Engine

5.2.1. Oil Bypass

- Install O-rings **(a)** on both ends of the bypass pipe.
- Install oil bypass pipe **(b)** into lower crankcase oil gallery.

NOTE
• *Replace O - Rings whenever the Bypass Pipe is removed.* **DO NOT** *reuse.*

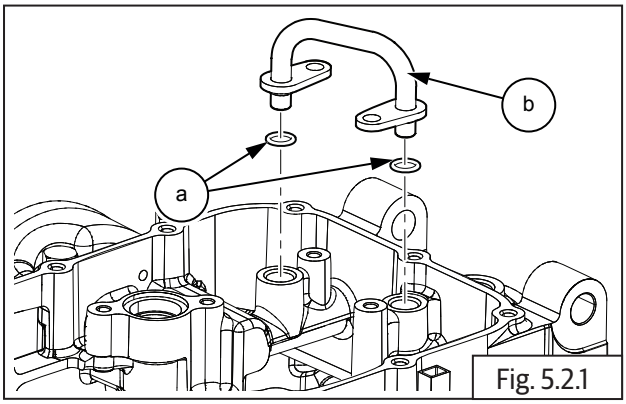

Fig. 5.2.1

- Tighten 2 Nos. Hex socket head screw **(M6) (a)** to specified torque.

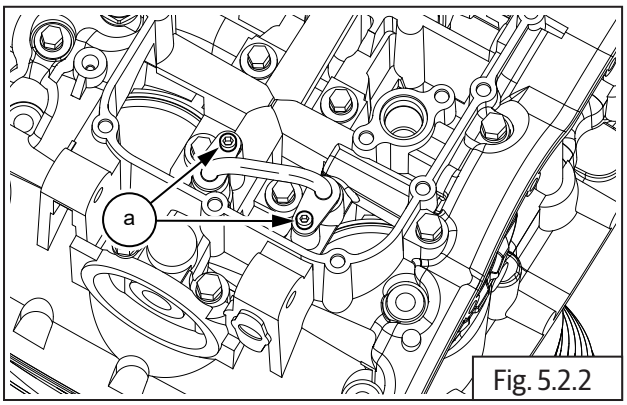

Fig. 5.2.2

	5 mm Allen socket with Ratchet
Torque	10-12 N-m/1.0-1.2 kgf-m

5.2.2. Oil Strainer

- Ensure O-ring is located on stainer.
- Install oil strainer **(a)** into lower crankcase oil gallery and tighten with 2 Nos. Hex flange head bolts **(M6) (b)** to specified torque.

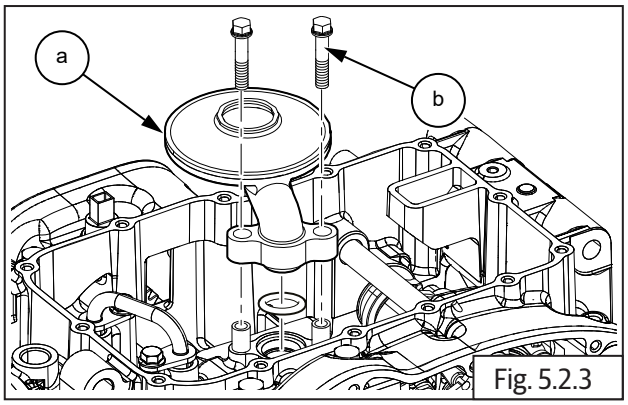

Fig. 5.2.3

	10 mm Socket with Ratchet
Torque	10-12 N-m/1.0-1.2 kgf-m

5.2.3. Oil Pan

- Locate oil pan gasket **(a)** on crankcase and assemble oil pan **(b)**.

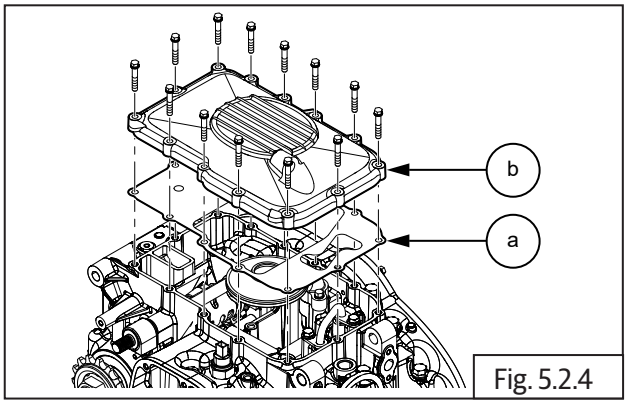

Fig. 5.2.4

- Assemble and tighten 13 Nos. Hex flange head bolts **(M6) (a)** in crisscross pattern to specified torque.

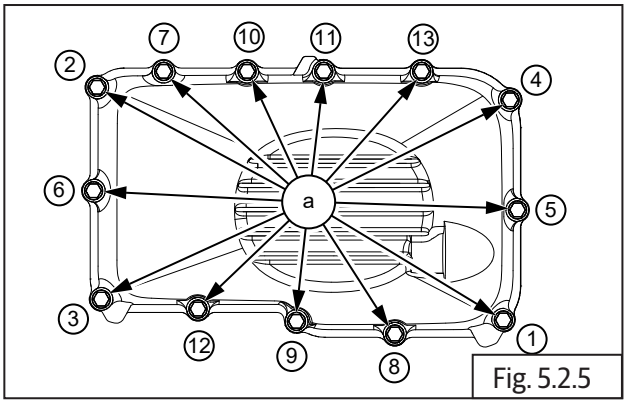

Fig. 5.2.5

	10 mm Socket with Ratchet
Torque	10-12 N-m/1.0-1.2 kgf-m

5.2.4. Oil Pressure Switch

- Assemble oil pressure switch **(a)** along with washer **(b)** on crankcase.

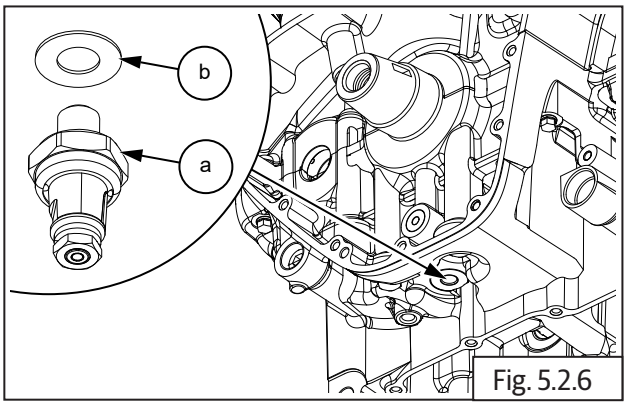

Fig. 5.2.6

- Tighten oil pressure switch **(a)** to specified torque.

	21 mm Socket with Torque wrench
Torque	8-10 N-m/0.8-1.0 kgf-m

NOTE
• *Apply Loctite 542 on the threads of Oil Pressure Switch before installing*
• *Replace washer whenever the oil pressure switch is removed.* **DO NOT** *reuse.*

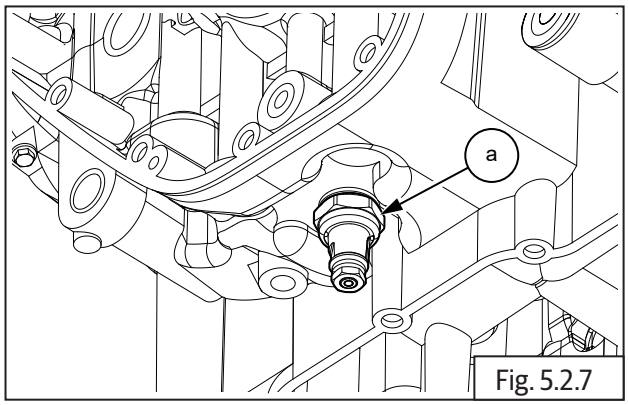

Fig. 5.2.7

	21 mm Socket with Torque wrench
Torque	10-12 N-m/1.0-1.2 kgf-m

5.2.5. Drain Plug

- Assemble magnetic drain plug **(a)** with new washer **(b)** on the front end of the oil sump at the bottom of the engine.

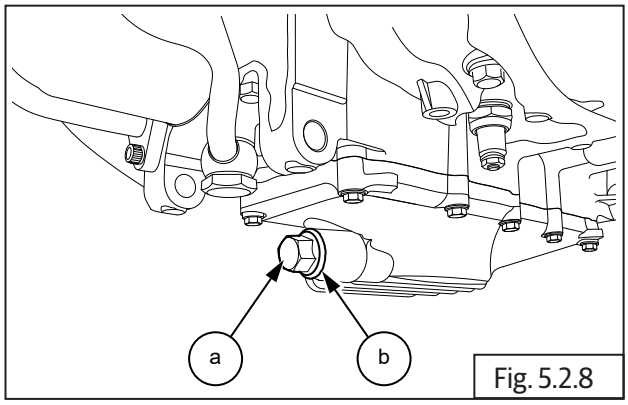

Fig. 5.2.8

- Tighten drain plug **(a)** to specified torque.

NOTE
• *Apply Loctite 542 on the threads of Drain Plug before installing*

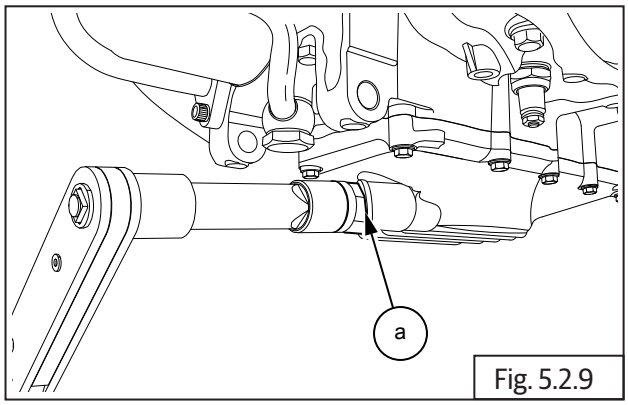

Fig. 5.2.9

	13 mm Socket with Torque wrench
Torque	33-37 N-m/3.3-3.7 kgf-m

5.2.6. Oil Filter

- Ensure O-ring **(a)** is seated properly over oil filter **(b)** .
- Apply thin layer of fresh engine oil over O-ring.
- Assemble the oil filter union **(c)** using special tool **(d)**.

NOTE
• *Ensure the slot in oil filter is outside while assembling.*

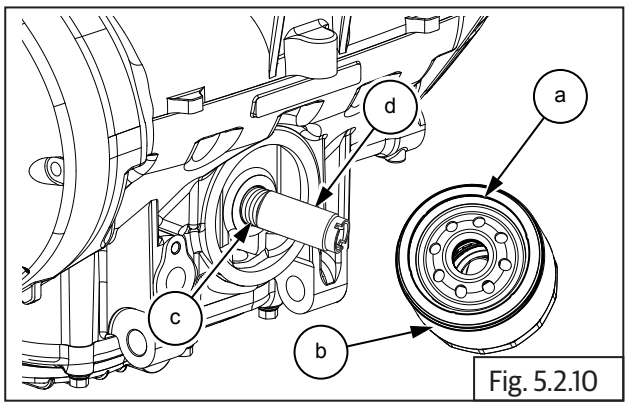

Fig. 5.2.10

SPL 	Part No: ST-30293-A Part Name: Oil Filter Union Wrench

- Locate oil filter on the threaded stud in the front of the engine.
- Tighten oil filter **(a)** using special tool **(b)** to specified torque.

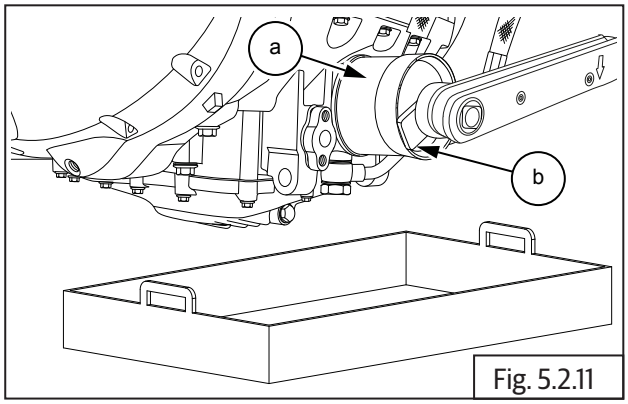

Fig. 5.2.11

SPL 	Part No: ST-30294-A Part Name: Oil Filter wrench with Torque wrench
Torque	15-20 N-m/1.5-2.0 kgf-m (or) 360° Rotation

5.2.7. Piston Rings on Piston

NOTE
• *Rings should be assembled with proper orientation (top marking should be always towards 1st ring end gap should be 45° before "EX" mark on piston crown).*
• *Middle 2nd ring end gap should be 180° from 1st ring end gap.*
• *Oil ring 3rd top rail end gap should be 180° from 2nd ring end gap (45° before "EX" on piston crown).*
• *Oil ring spacer end gap should be 45° before 3rd ring top rail end gap (90° before "EX" on piston crown).*
• *Oil ring (3rd) bottom rail end gap should be 180° from 3rd ring top rail end gap.*
• *One of the circlip should be assembled on the inner side of piston.*

Piston Rings

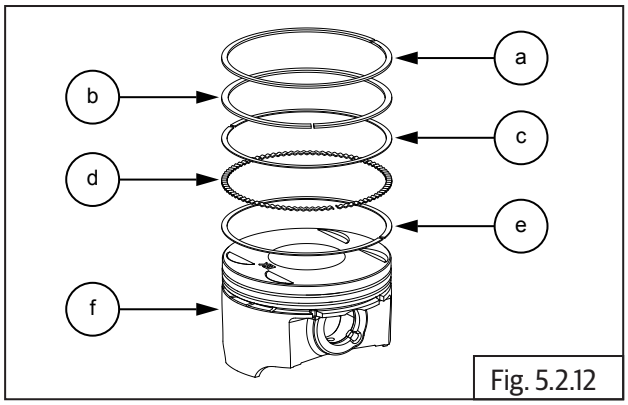

Fig. 5.2.12

a	Top ring
b	Second ring
c	Oil ring top rail
d	Oil ring spacer
e	Oil ring bottom rail
f	Piston

Orientation Pattern

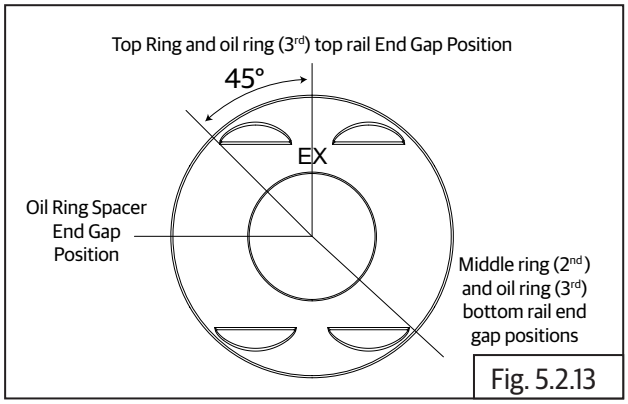

Fig. 5.2.13

- Top ring (1st) and oil ring (3rd) top rail end gap positions.

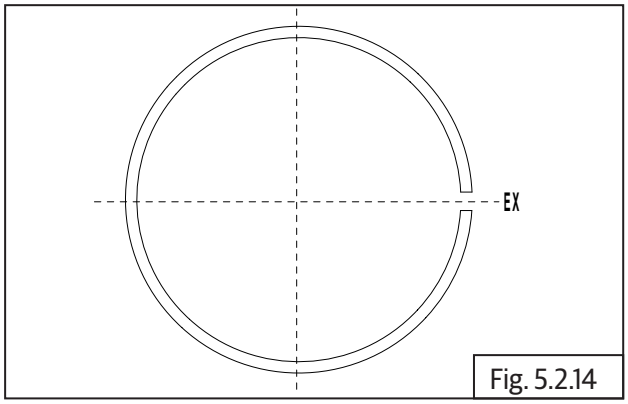

Fig. 5.2.14

- Middle (2nd) ring and oil ring (3rd) bottom rail end gap positions.

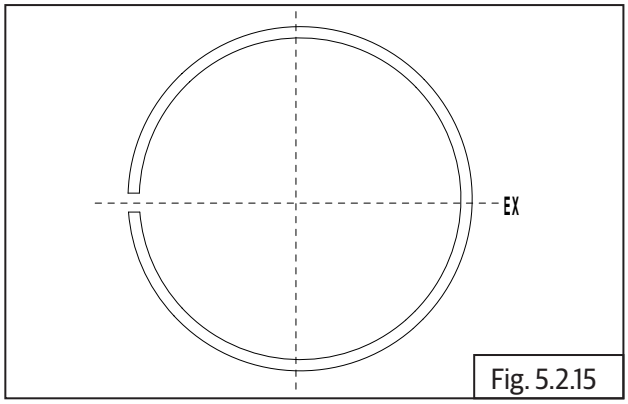

Fig. 5.2.15

- Oil ring spacer end gap position.

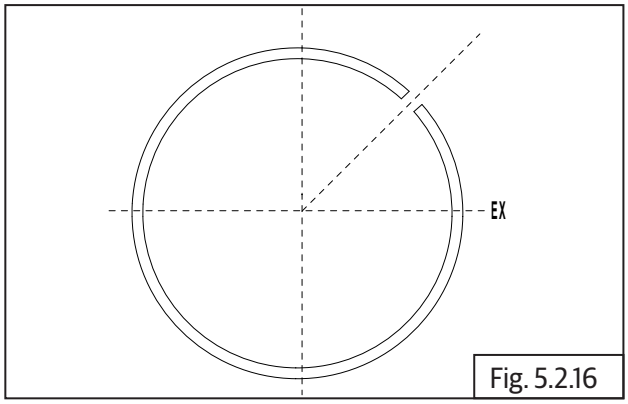

Fig. 5.2.16

5.2.8. Pistons on Connecting Rods

- Ensure circlip is assembled on the inner side of the piston LH.
- Ensure piston rings are assembled correctly on the piston.
- Locate piston LH on the connecting rod LH with the marking "EX" on the piston crown is towards the front.

- Ensure gudgeon pin mounting holes on piston and connecting rod are aligned and insert gudgeon pin **(a)** into piston from the outside, till it stops against the circlip on the inner side of the piston.

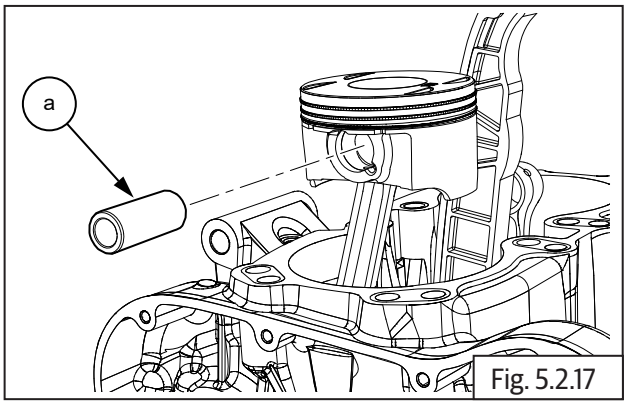

Fig. 5.2.17

- Locate the other circlip **(a)** in the groove in piston and ensure it is correctly and properly seated inside the groove.

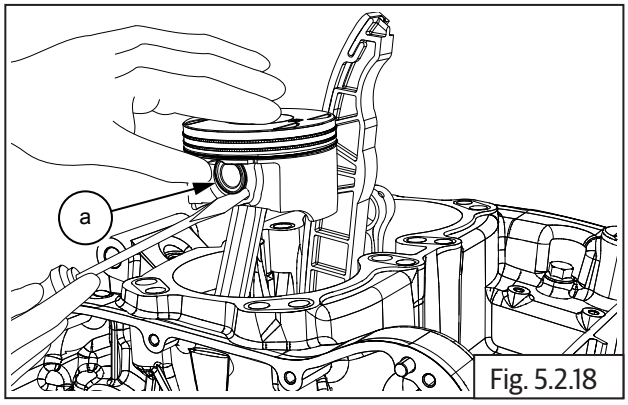

Fig. 5.2.18

	Small pointed chisel

- Repeat above procedure to assemble piston RH on the connecting rod RH.

5.2.9. Cylinder Barrel Dowels on Crankcase

- Install 2 Nos. dowel pins and on upper crankcase.

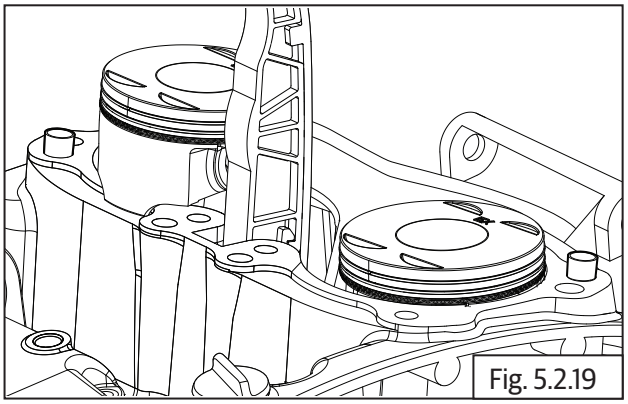
Fig. 5.2.19

5.2.10. Cylinder Barrel Gasket on Crankcase

- Ensure the gasket seating area in crankcase is clean.
- Ensure cam chain is routed through a new cylinder base gasket **(a)** and locate the gasket on crankcase **(b)**.
- Ensure proper seating of the gasket on the dowels on the crankcase.

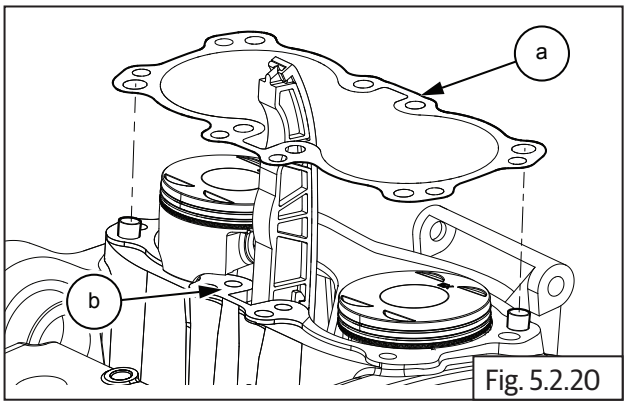

Fig. 5.2.20

5.2.11. Piston LH in Cylinder Barrel

- Ensure piston LH is at its top most position by rotating crankshaft clockwise. Locate piston ring compressor on piston LH.
- Compress piston rings with special tool **(a)**.

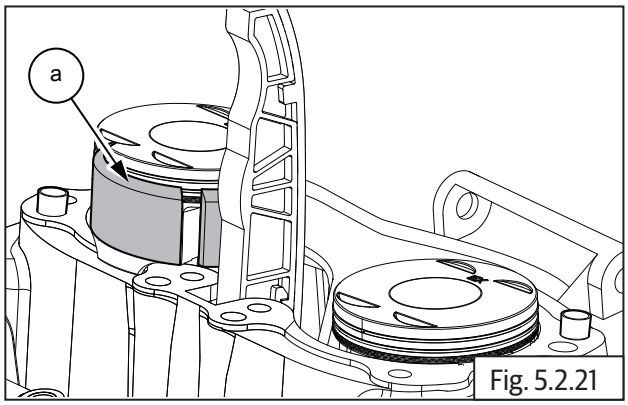

Fig. 5.2.21

SPL 	Part No: ST-30296-A Part Name: Piston ring compressor

- Position and hold cylinder barrel above crankcase, route cam chain through cylinder barrel bottom and ensure it is supported firmly and suitably at the top.
- Ensure cylinder barrel LH is well lubricated, LH piston is held firmly and straight.
- Gently lower cylinder barrel **(a)** over the piston ring compressor tool on piston LH, till the piston is halfway into the cylinder barrel.

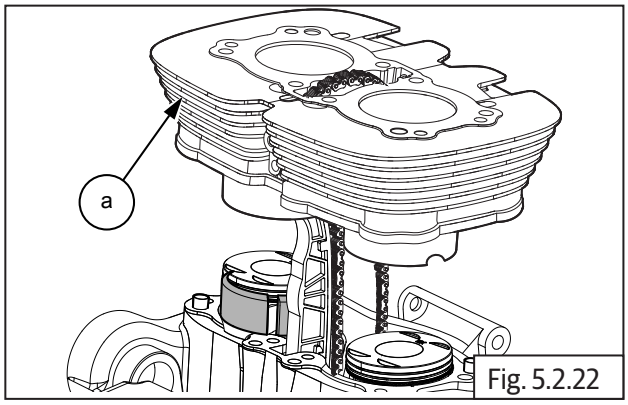

Fig. 5.2.22

- Hold cylinder barrel firmly in suspended position and remove the piston ring compressor special tool **(a)** from piston LH.

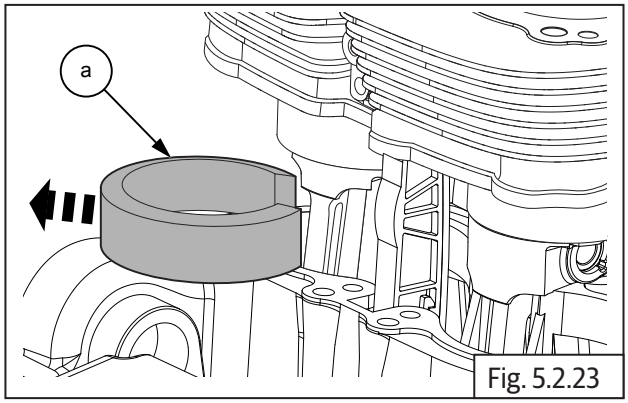

Fig. 5.2.23

SPL 	Part No: ST-30296-A Part Name: Piston ring compressor

5.2.12. Piston RH in Cylinder Barrel

- Ensure cylinder barrel RH is well lubricated, RH piston is at its top most position, held firmly and straight.
- Locate piston ring compressor tool **(a)** over piston RH.

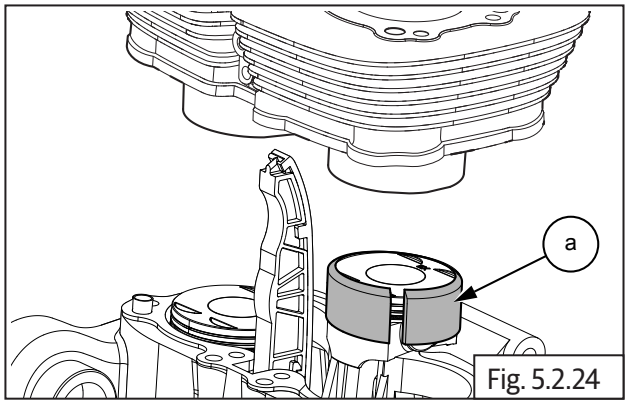

Fig. 5.2.24

SPL 	Part No: ST-30296-A Part Name: Piston ring compressor

- Gently lower cylinder barrel **(a)** till piston RH is halfway into the cylinder barrel.

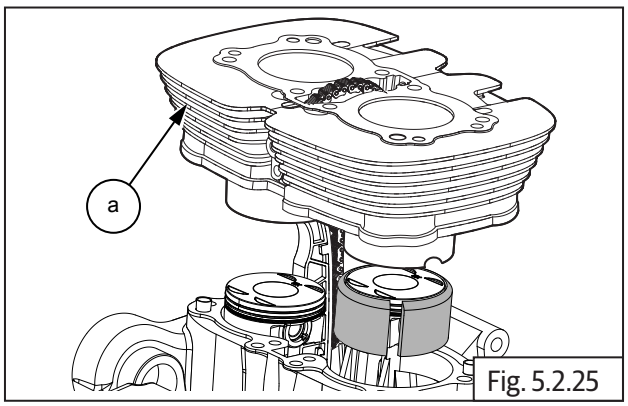

Fig. 5.2.25

- Hold cylinder barrel firmly in suspended position and remove the piston ring compressor special tool **(a)** from piston RH.

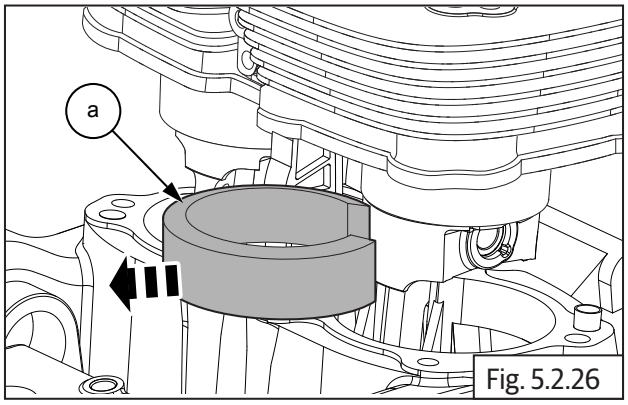

Fig. 5.2.26

SPL 	Part No: ST-30296-A
	Part Name: Piston ring compressor

- Gently lower cylinder barrel further, till it is firmly seated on the crankcase.
- Locate 2 Nos. dowel pins **(a)** on cylinder barrel and ensure they are seated properly.

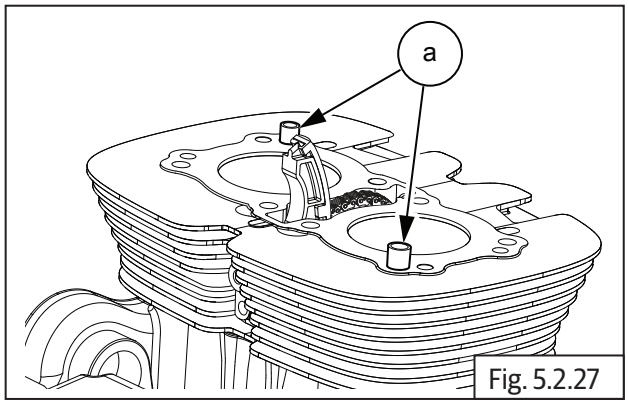

Fig. 5.2.27

5.2.13. Cylinder Head Gasket on Cylinder Barrel

- Ensure the gasket seating surface on cylinder barrel is clean.
- Ensure cam chain is routed through a new cylinder head gasket.
- Locate head gasket **(a)** on cylinder barrel and ensure it is properly seated on the dowel pins and cylinder barrel.

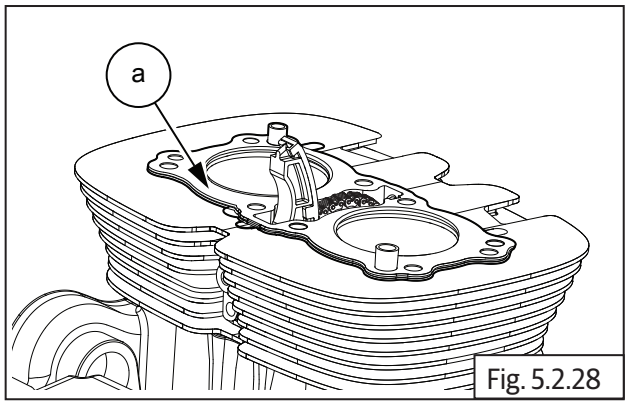

Fig. 5.2.28

5.2.14. Floating Chain Pad

- Hold timing chain **(a)** suitably and insert chain pad **(b)** into cylinder barrel with the rubber track facing inside.

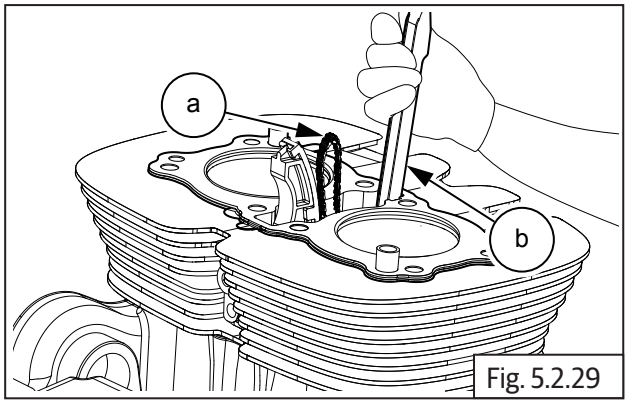

Fig. 5.2.29

⚠ CAUTION

Ensure floating chain pad seating correctly in the crankcase and free radial movement.

5.2.15. Components in Cylinder Head

Valves and Springs

- Install 8 valve stem seals **(b)** on the 8 valve guides **(a)**.

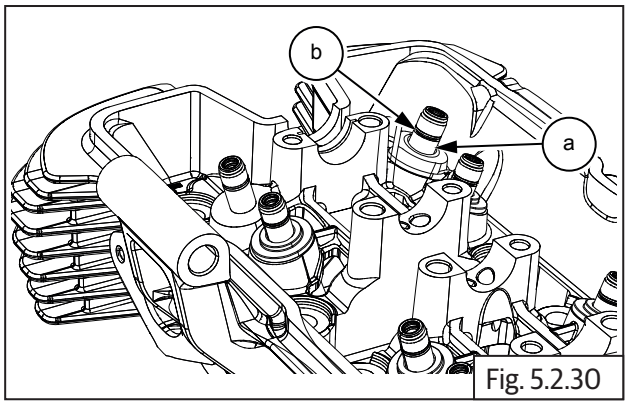

Fig. 5.2.30

- Lubricate and insert the valves **(a)** into the valve guides inside cylinder head **(b)**.

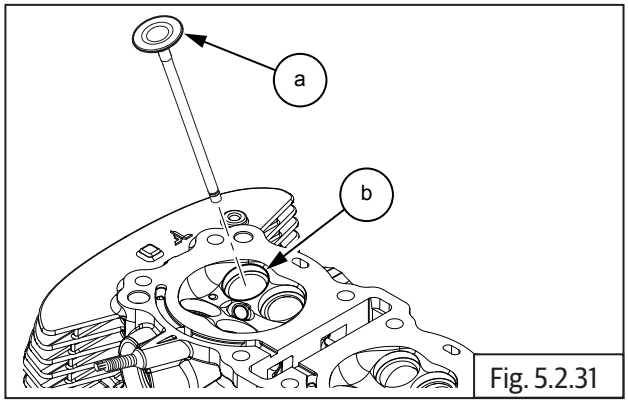

Fig. 5.2.31

- Support the valve inside cylinder head and assemble valve spring seat **(c).** Place the spring **(a)** over valve stem **(b)** in the outer area of the cylinder head.

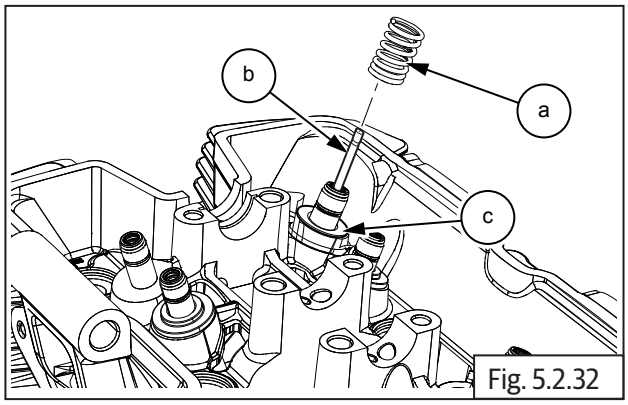

Fig. 5.2.32

- Insert Retainer, Valve Spring - 4v **(a)** above valve spring **(b)**.

⚠ CAUTION

Ensure the marked position in spring (a) is facing downwards while assembling.

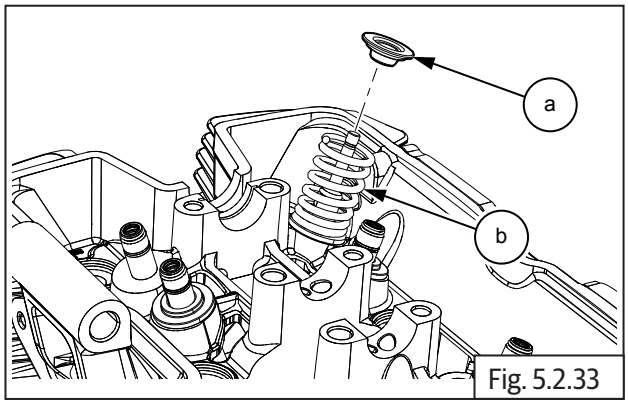

Fig. 5.2.33

- Locate valve spring compressor special tool on the valve such that the threaded screw end of the tool is seated centrally on the valve inside the cylinder head and the other end is seated on the valve spring retainer on the outer side of the cylinder head.
- Compress valve spring with special tool **(a)** by "hand tightening" the threaded screw of the special tool gently, till it locks against the valve**.**

⚠ CAUTION

DO NOT overtighten the special tool as it will damage both the valve seating surface and the special tool.

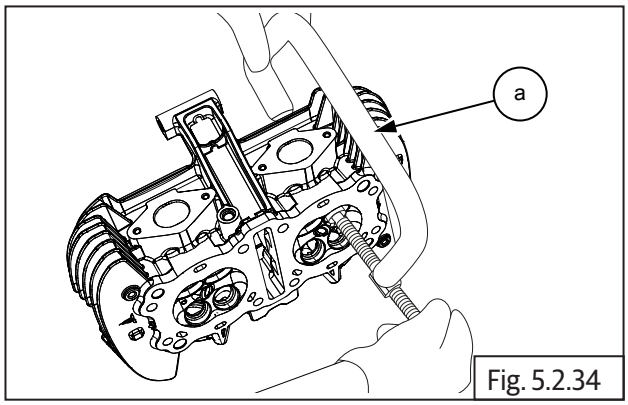

Fig. 5.2.34

SPL 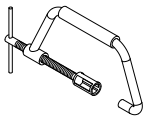	Part No: ST-27528-2
	Part Name: Valve spring compressor

- Locate two split cotters **(a)** on the retainer with their tapered end facing inside and the flat edges seated against the valve stem top portion.

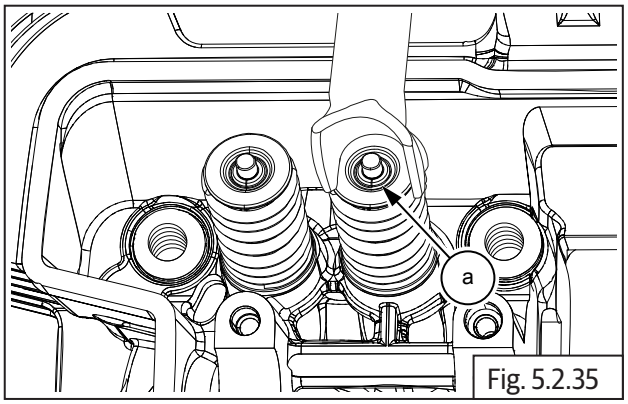

Fig. 5.2.35

SPL 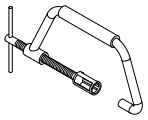	Part No: ST-27528-2
	Part Name: Valve spring compressor

- Gently and slowly release valve spring compressor tool by unscrewing the threaded shaft, duly ensuring the valve cotters are locked in place on the valve stem and the tapered surfaces of the cotters are inside the valve spring retainer.

- Remove valve spring compressor special tool **(a)** from the valve.

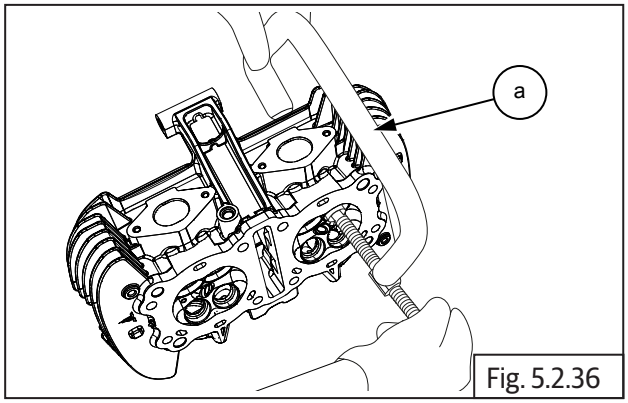

Fig. 5.2.36

- Repeat the above process to install the other seven valves, springs, retainers and cotters on the cylinder head.

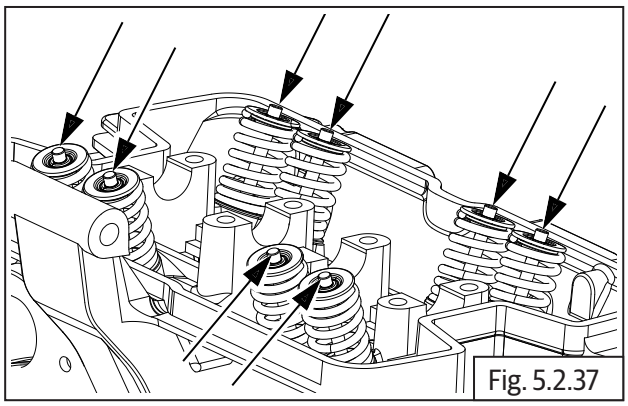
Fig. 5.2.37

5.2.16. Cylinder Head on Cylinder Barrel

Cylinder Head Assembly on Cylinder Barrel

- Position cylinder head over the barrel such that the exhaust ports are facing towards the front and inlet ports are towards the rear of the engine.
- Ensure the 2 dowels **(a)** and cylinder head gasket are located on the cylinder barrel.
- Ensure the cam chain pads are positioned correctly and route the cam chain from the lower side of the cylinder head to the top.
- Support cam chain suitably to prevent it from falling into cylinder head.

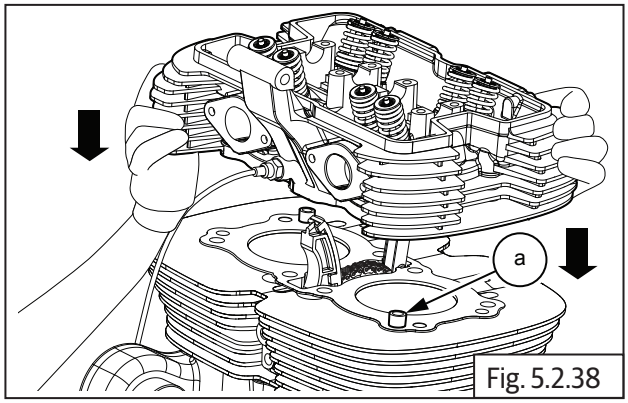

Fig. 5.2.38

⚠ CAUTION

Cylinders bolts and washers should be used one time only. DO NOT reuse.

- Locate new 8 Nos. Hex flange head bolts **(M10) (a)** along with washers on the cylinder head.

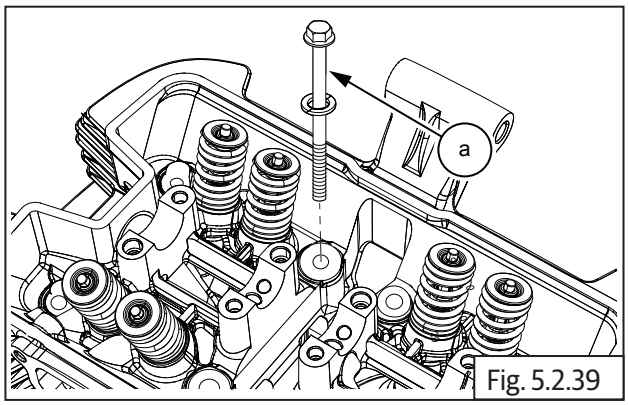

Fig. 5.2.39

	12 mm Socket with Ratchet

- Tighten the cylinder head bolts in a crisscross pattern to the initial 1st torque values FIRST and then to the 2nd torque values as specified below.

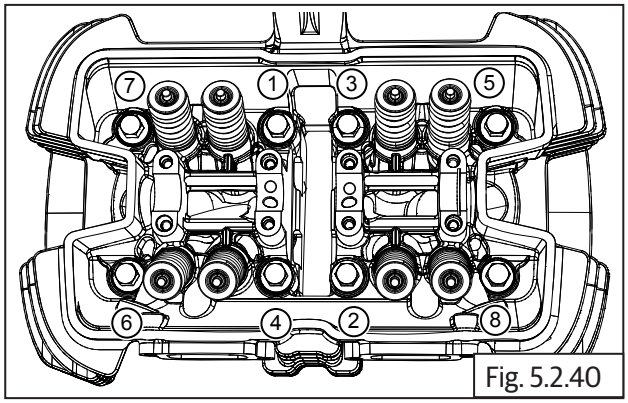

Fig. 5.2.40

- Finally tighten each of the cylinder head bolts using an angular torque wrench, to the specified angular torque value given below and in the same crisscross pattern detailed above.

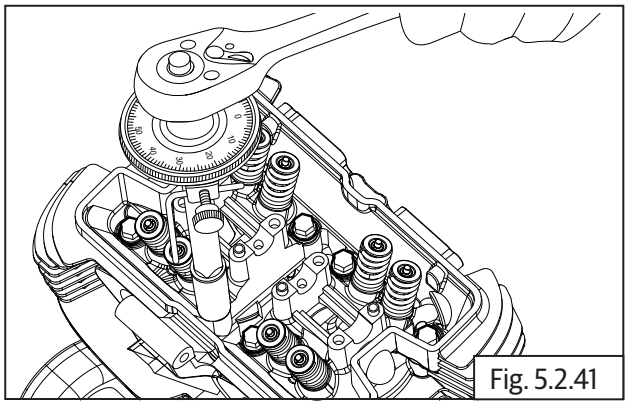
Fig. 5.2.41

	14 mm Socket with Angle wrench
1st Torque	15 N-m/1.5 kgf-m
2nd Torque	35 N-m/3.5 kgf-m
Angular Torque	150° (deg)

⚠ CAUTION

Torque and angle should be as specified. Do not over-torque as it will damage the bolts.

5.2.17. Starter Clutch to Magneto Rotor

- Lubricate one-way clutch **(d)** and assemble into outer ring **(c)** with the collar seating in the groove in the outer ring.
- Position outer ring on magneto rotor such that the collar of the starter clutch is facing magneto rotor.
- Ensure mounting holes are aligned, insert 6 Nos. Hex socket head screws **(M6) (a)** into magneto rotor **(b)** and tighten outer ring **(c)** to rotor to specified torque.

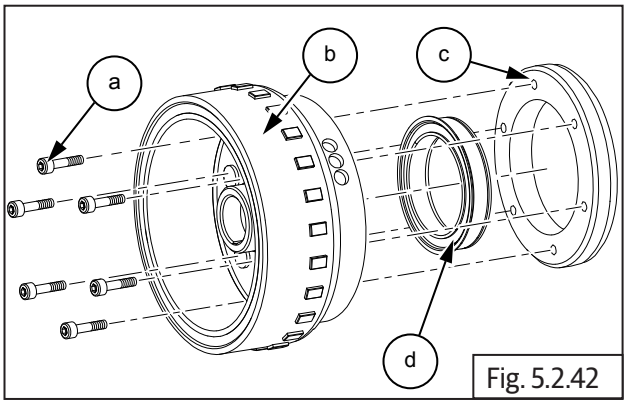

Fig. 5.2.42

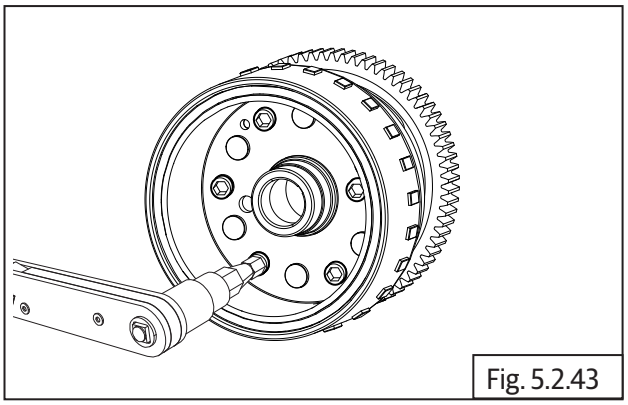
Fig. 5.2.43

	5 mm Allen socket with Torque wrench
Torque	10-12 N-m/1.0-1.2 kgf-m

NOTE
• *Apply Loctite 243 on the threads of Magneto Rotor bolts* **(a)** *before installing*

5.2.18. Woodruff Key on Crankshaft

- Assemble woodruff key **(a)** on crankshaft and ensure it is facing upwards by rotating crankshaft.

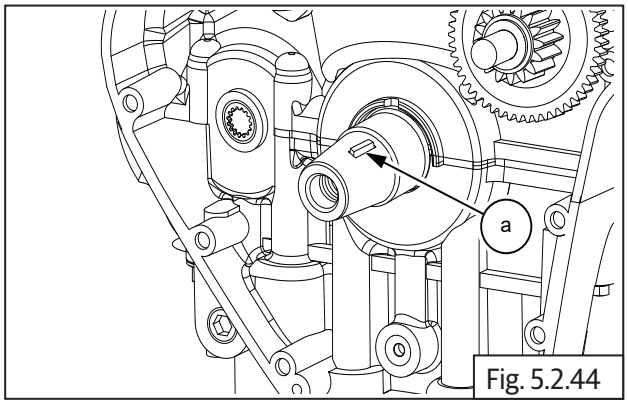

Fig. 5.2.44

5.2.19. Magneto Rotor on Crankshaft

- Position gear starter clutch with the collar facing outside.
- Insert gear starter clutch **(a)** into magneto rotor **(b)** and rotate anti-clockwise to lock the gear starter clutch into magneto rotor.

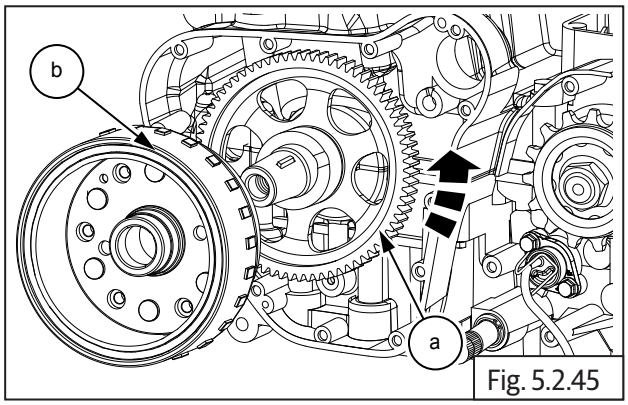

Fig. 5.2.45

- Locate magneto rotor **(a)** on crankshaft duly ensuring the slot in the rotor is positioned correctly on woodruff key.

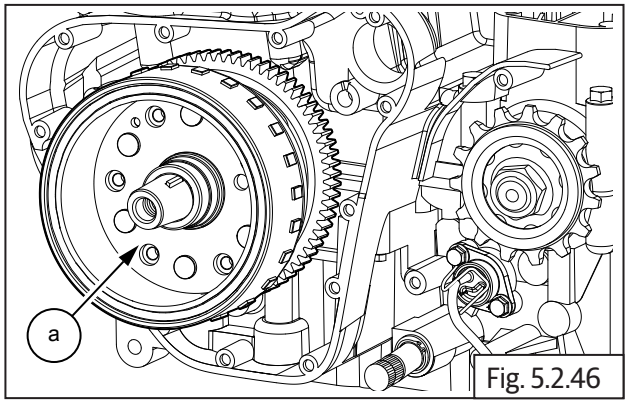

Fig. 5.2.46

- Position idle gear **(a)** against crankcase with smaller gear facing outside and insert idle gear spindle into boss in crankcase.

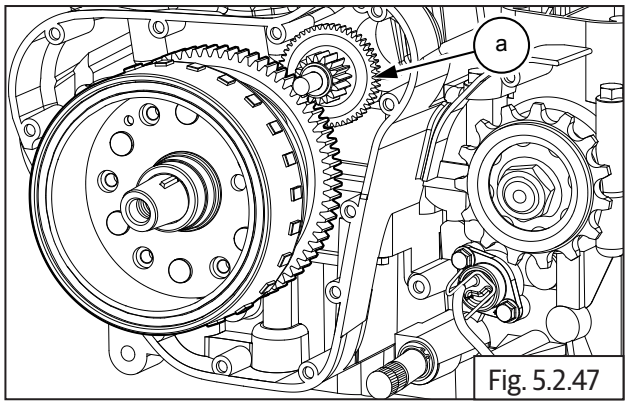

Fig. 5.2.47

- Locate and assemble Hex flange bolt **(M12) (a)** with washer on magneto rotor and tighten bolt just sufficiently.

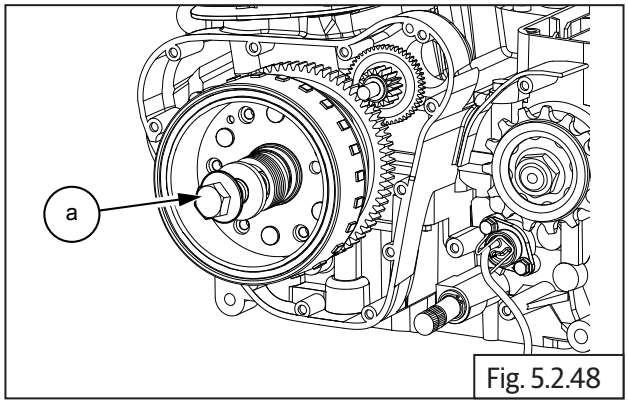

Fig. 5.2.48

- In order to tighten magneto rotor bolt, place special tool **(a)** in crankcase RH between the gears to lock the crankshaft and prevent rotation.
- Ensure LH piston is at TDC on compression stroke, before locating special tool inside crankcase RH.

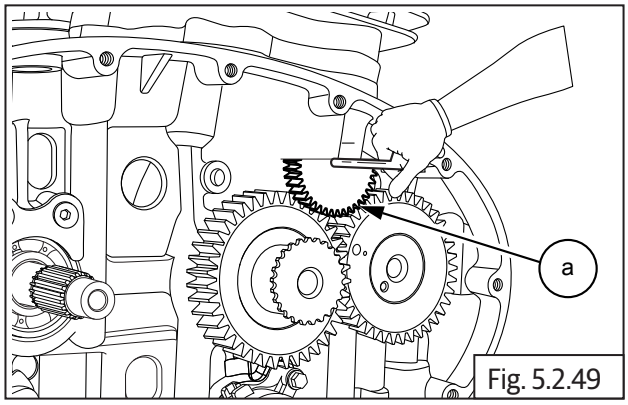

Fig. 5.2.49

SPL 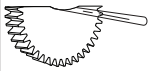	Part No: ST-27533-2 Part Name: Crank Gears Locking Tool
Torque	153-157 N-m/15.3-15.7 kgf-m

	17 mm Socket with Ratchet and Torque wrench

- Remove special tool from crankcase RH side after tightening magneto rotor bolt.

5.2.20. Camshaft Sub Assembly

- Hold the timing chain in stretched condition and gently rotate crankshaft clockwise to bring LH piston to TDC.

NOTE
• *Insert special tool in crankcase RH to lock the crankshaft from rotating.*

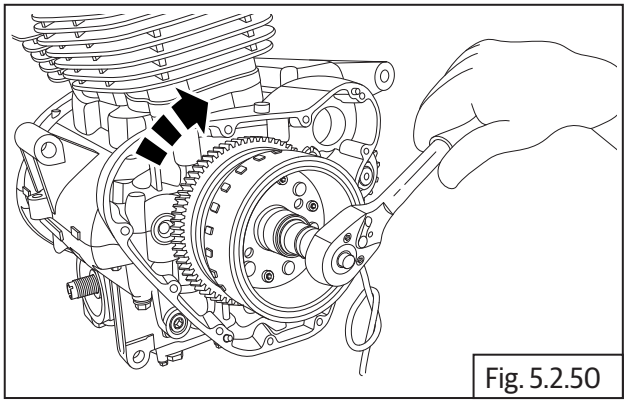
Fig. 5.2.50

	17 mm Socket with Ratchet

⚠ **CAUTION**
DO NOT rotate crankshaft anti-clockwise.

- Hold sprocket in position with one of the slotted holes facing on top.

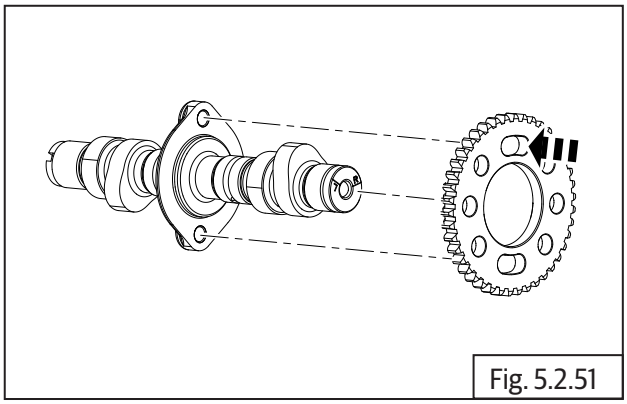
Fig. 5.2.51

- Assemble cam chain **(a)** on sprocket and locate camshaft **(b)** into sprocket from the RH side.
- Locate and install C washer **(c)** on the cylinder head.

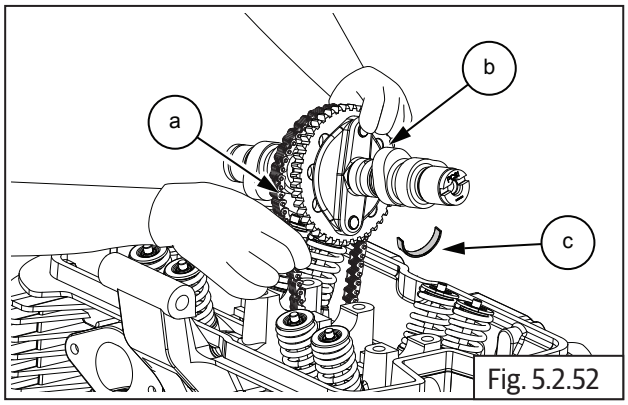

Fig. 5.2.52

- Ensure reference mark "L" in the camshaft is aligned to the cylinder head on LH side.

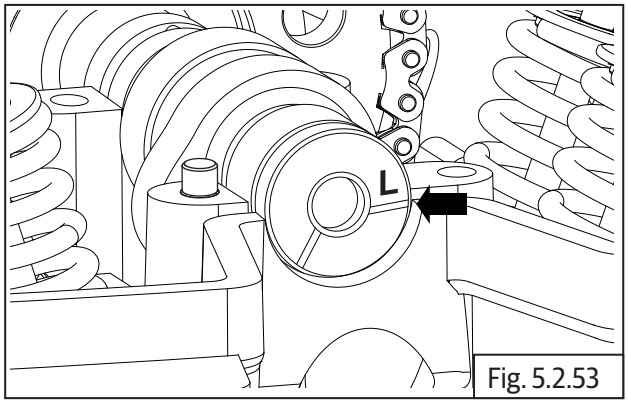

Fig. 5.2.53

- Locate timing chain sprocket on camshaft with its mounting slot centralized to the threads in the camshaft.
- Locate and tighten Hex head bolt **(M8) (a)** sufficiently on timing chain sprocket. **DO NOT TIGHTEN FULLY.**

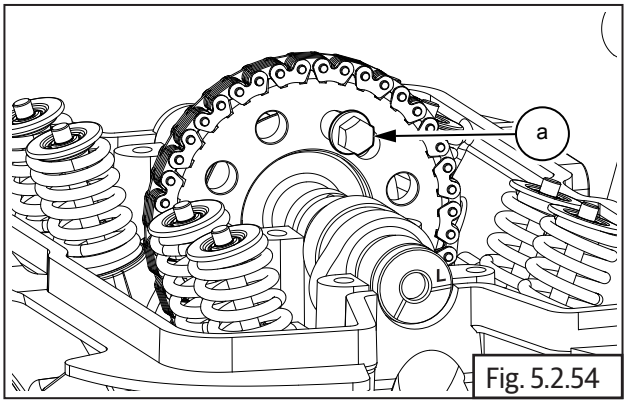

Fig. 5.2.54

- Remove the special tool from the camshaft on RH side.
- Rotate magneto **(a)** till another slotted hole on cam chain sprocket is at top most position. Ensure reference mark "R" aligned to the cylinder head.

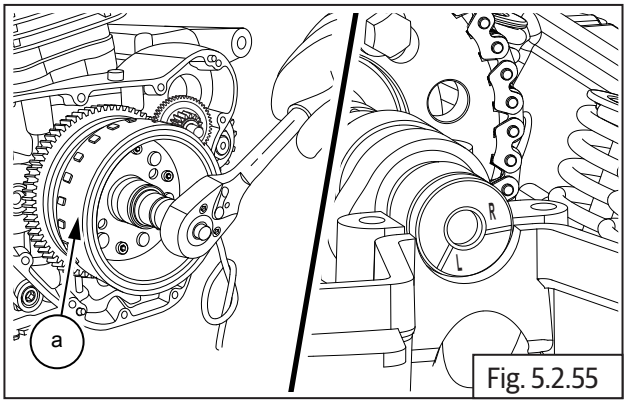

Fig. 5.2.55

	17 mm Socket with Ratchet

- Locate the other Hex head bolt **(M8) (a)** in the slotted hole on timing chain sprocket and tighten to specified torque.

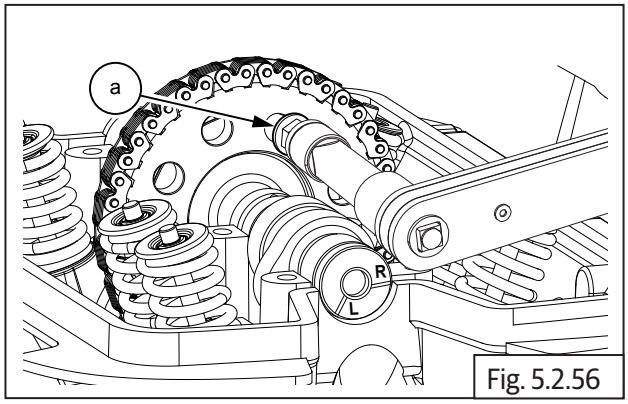

Fig. 5.2.56

	12 mm Socket with Torque wrench
Torque	33-35 N-m/3.3-3.5 kgf-m

- Remove the special tool from cylinder head on RH side.
- Rotate the magneto **(a)** slowly till the first bolt is visible at top most position on cam chain sprocket.

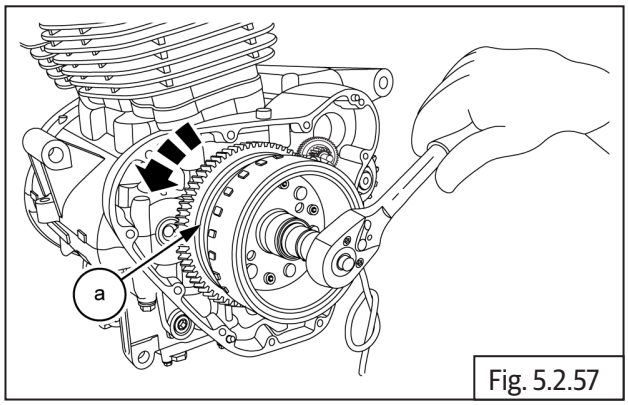

Fig. 5.2.57

	17 mm Socket with Ratchet

- Ensure reference mark "L" in the camshaft is aligned to the cylinder head on LH side.

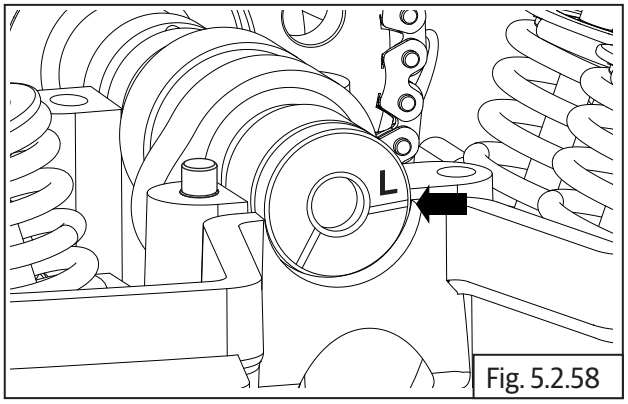

Fig. 5.2.58

- Tighten Hex head bolt **(M8) (a)** to specified torqueLocate and fit "C" washer **(a)** on camshaft.

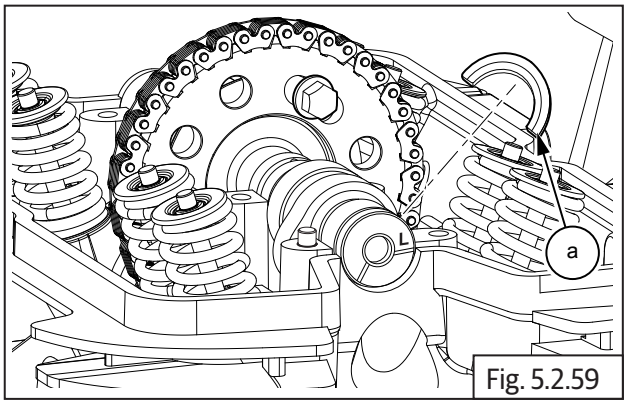

Fig. 5.2.59

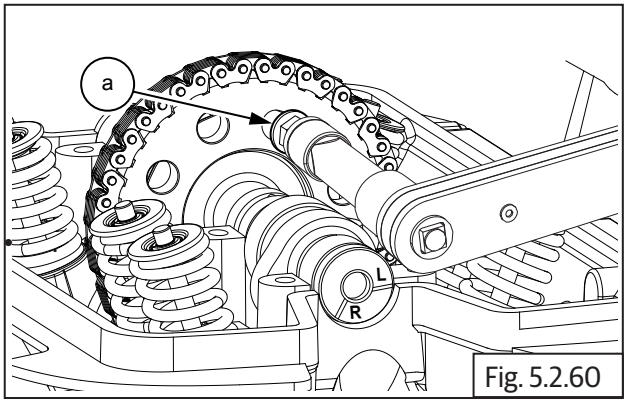

Fig. 5.2.60

	12 mm Socket with Torque wrench
Torque	33-35 N-m/3.3-3.5 kgf-m

5.2.21. Timing Chain Tensioner

- Ensure center bolt is removed from timing chain tensioner.

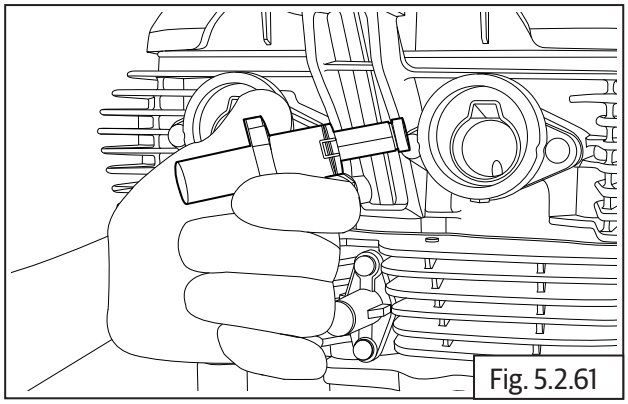

Fig. 5.2.61

- Assemble new gasket on chain tensioner housing **(a)**. Ensure the foot is fully retracted into chain tensioner and locate chain tensioner adjuster in cylinder barrel such that the longer side of the foot is facing towards cylinder barrel RH.

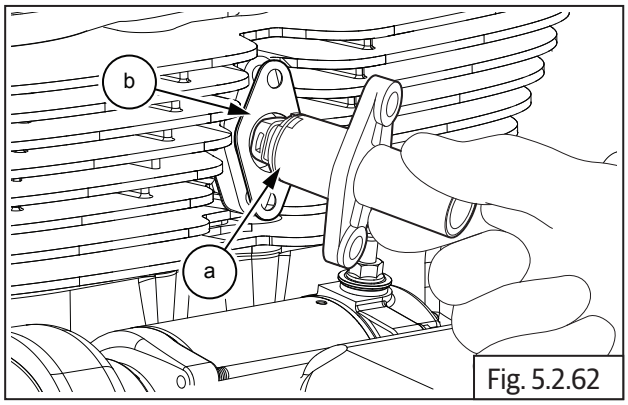

Fig. 5.2.62

- Place gasket **(b)** on the tensioner
- Assemble 2 Nos. Hex flange head bolt **(M6) (a)** on chain tensioner adjuster and tighten to specified torque.

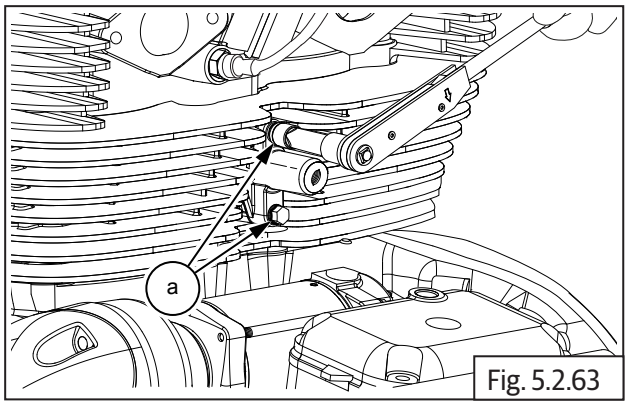

Fig. 5.2.63

	10 mm Socket with Torque wrench
Torque	10-12 N-m/1.0-1.2 kgf-m

- Locate screw driver into chain tensioner adjuster **(a)** and tighten tensioner screw till it comes to a stop. **DO NOT OVER TIGHTEN.**

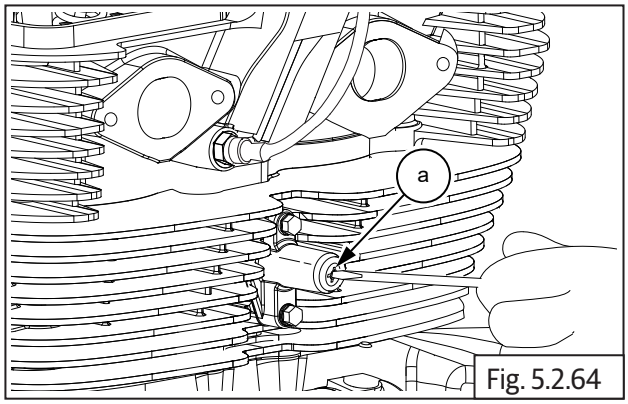

Fig. 5.2.64

	Screw driver

- Locate new O-ring **(b)** and, assemble Hex flange head bolt **(M6) (a)** on chain tensioner adjuster and tighten fully to specified torque.

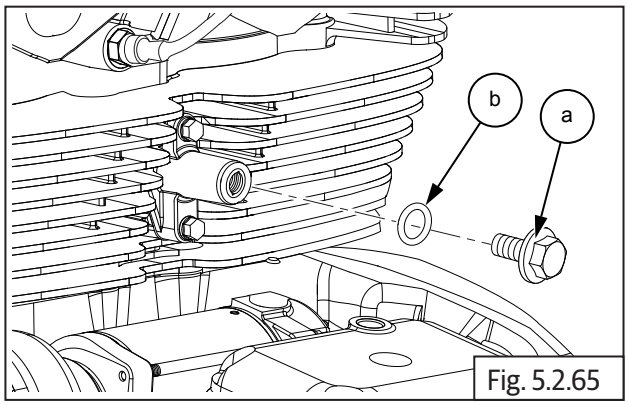

Fig. 5.2.65

	10 mm Socket with Ratchet and Torque wrench
Torque	4-5 N-m/0.4-0.5 kgf-m

5.2.22. Rocker Arms in Carriers LH and RH

Exhaust Rocker Arm in Carrier "L"

- Place the carrier **(a)** on a work table with the mark "L" facing upwards.
- Locate rocker arm **(b)** with the marking "EL" into carrier "L" duly ensuring the following.
  - The roller of the rocker arm is inserted from the side marked "L".
  - The tappet adjustment screws are facing upwards.
  - Ensure the holes are aligned and insert spindle with its small chamfer side in the carrier.
  - Ensure cut away in spindle is correctly aligned to the carrier mounting hole.
  - Align and insert the spindle **(c)** into rocker carrier and rocker arm.
  - Ensure spring **(d)** and washer **(e)** seated properly.
  - **Intake Rocker Arm in Carrier "L"**
- Locate rocker arm with the marking "IL" into carrier "L" duly ensuring the following.
  - The roller of the rocker arm is inserted from the OPPOSITE side marked "L".
  - The tappet adjustment screws are facing upwards.
  - Ensure the holes are aligned and insert spindle with its small chamfer side in the carrier.
  - Ensure cut away in spindle is correctly aligned to the carrier mounting hole.
  - Align and insert the spindle **(c)** into rocker carrier and rocker arm.
  - Ensure spring **(d)** and washer **(e)** seated properly.
- Repeat the above process to assemble rocker arm "ER" and "IR" into carrier "R".

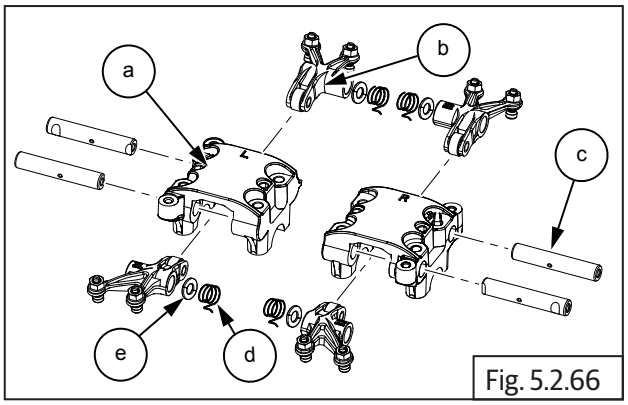

Fig. 5.2.66

5.2.23. Rocker Carrier on Cylinder Head LH

NOTE
• *Ensure "L" mark on camshaft is aligned to cylinder head.*

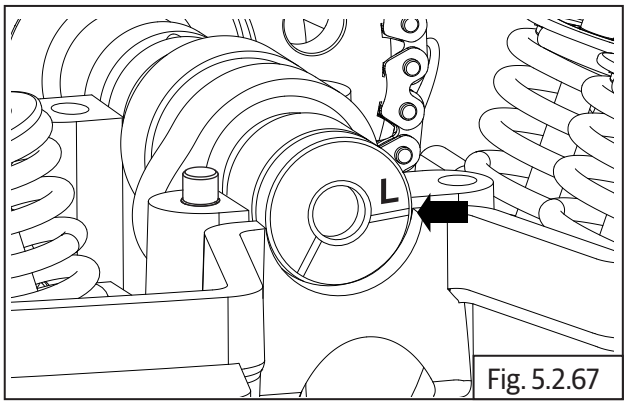

Fig. 5.2.67

- Insert special tool **(a)** in crankcase RH to lock the crankshaft and prevent rotation.

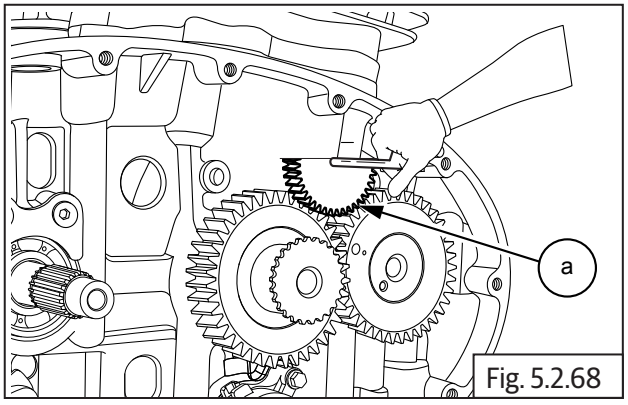

Fig. 5.2.68

SPL 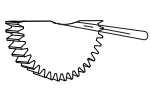	Part No: ST-27533-2 Part Name: Crank Gears Locking Tool

- Ensure the tappet adjuster locknuts and adjusters are fully loosened on the intake and exhaust rocker arms.
- Assemble rocker carrier LH **(a)** on cylinder head LH such that tappet adjusters are above the inlet and exhaust valves.
- Assemble 4 Nos. Hex flange head bolts **(M6) (b)** on rocker carrier and tighten in a crisscross pattern to specified torque.

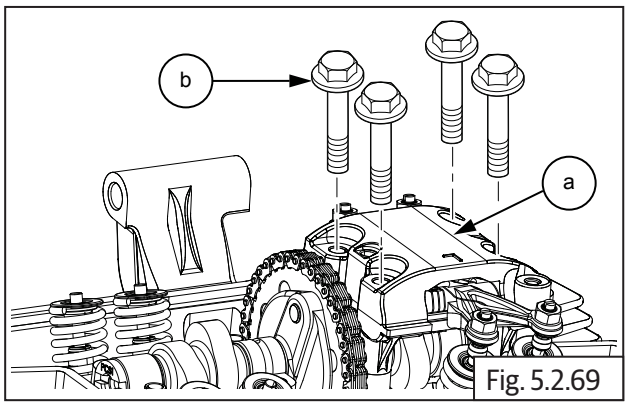

Fig. 5.2.69

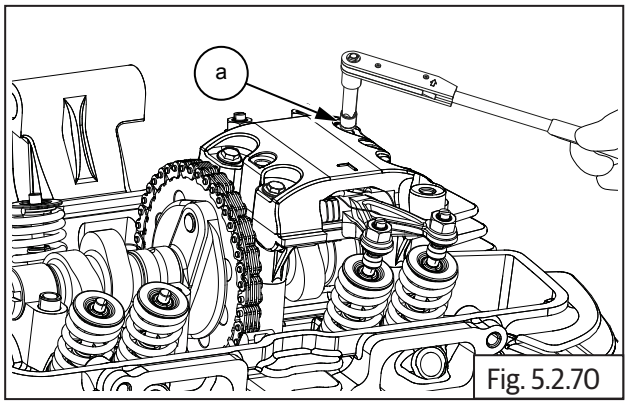

Fig. 5.2.70

	10 mm Socket with Torque wrench
Torque	10-12 N-m/10-1.2 kg-m

- Remove magneto and clutch locking tool from crankcase RH side.

5.2.24. Rocker Carrier on Cylinder Head RH

- Rotate magneto **(a)** clockwise and ensure reference mark "R" is aligned with cylinder head.

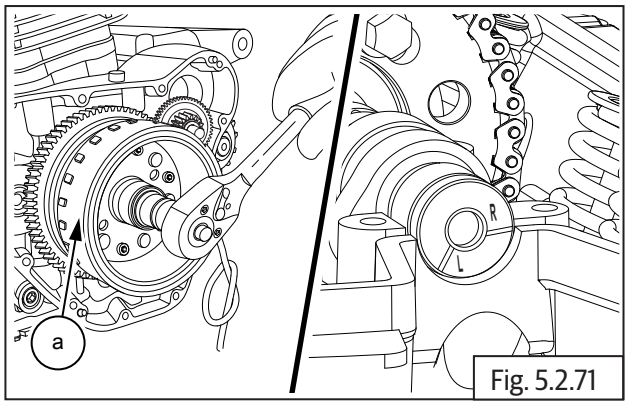

Fig. 5.2.71

	17 mm Socket with Ratchet

- Ensure the tappet adjuster locknuts and adjusters are fully loosened on the intake and exhaust rocker arms.
- Assemble rocker carrier RH **(a)** on cylinder head RH such that the tappet adjusters are above the inlet and exhaust valves.
- Assemble 4 Nos. Hex flange head bolts **(M6) (b)** on rocker carrier **(a)** and tighten in a crisscross pattern to specified torque.

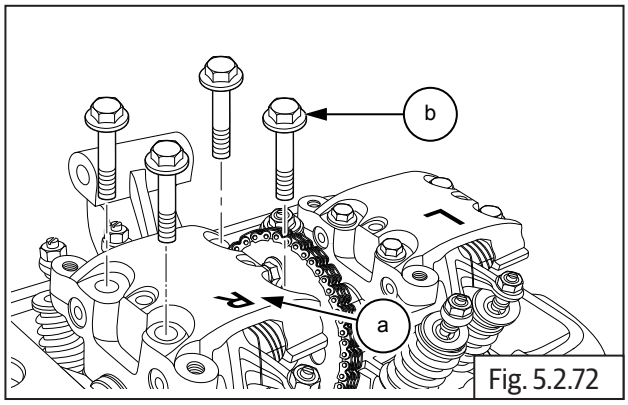

Fig. 5.2.72

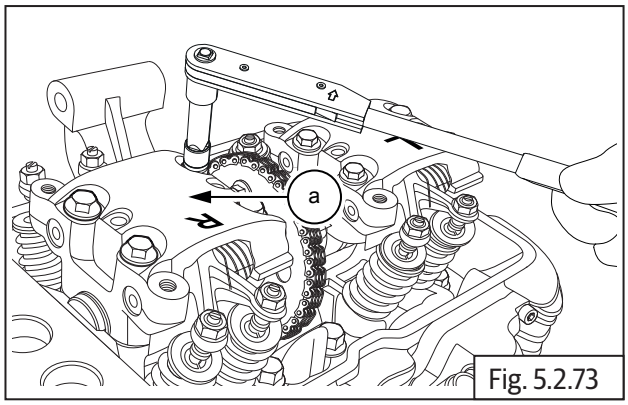

Fig. 5.2.73

	10 mm Socket with Torque wrench
Torque	10-12 N-m/10-1.2 kgf-m

5.2.25. Tappet Clearance Adjustment

Tappet Clearance Cylinder Head LH

- Ensure "L" mark on camshaft **(a)** is aligned to cylinder head.

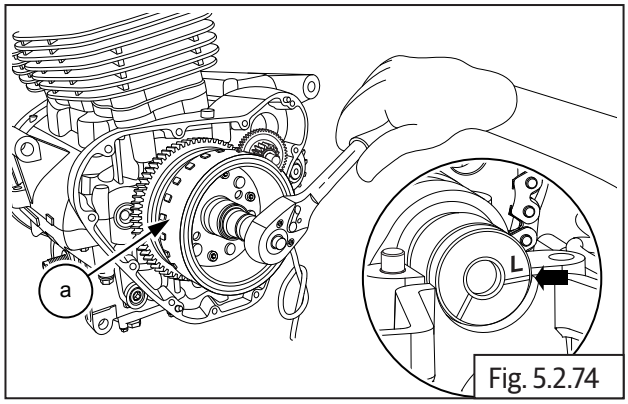

Fig. 5.2.74

- Loosen tappet adjuster screw locknut **(a)** with tappet adjusting tool and ensure locknut is sufficiently loose.

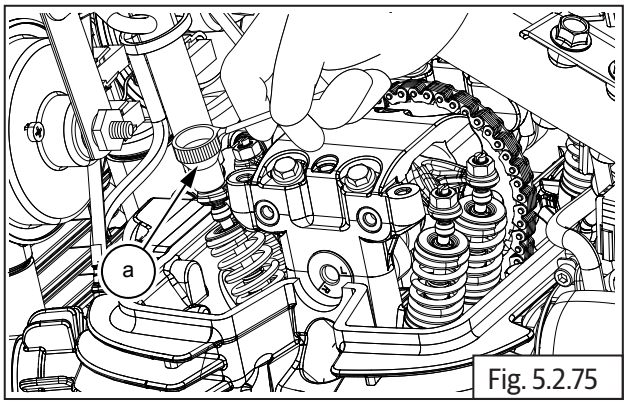

Fig. 5.2.75

- Insert a screwdriver into the tappet adjusting tool **(b)** and ensure it is seated correctly on the adjuster screw **(a)**.

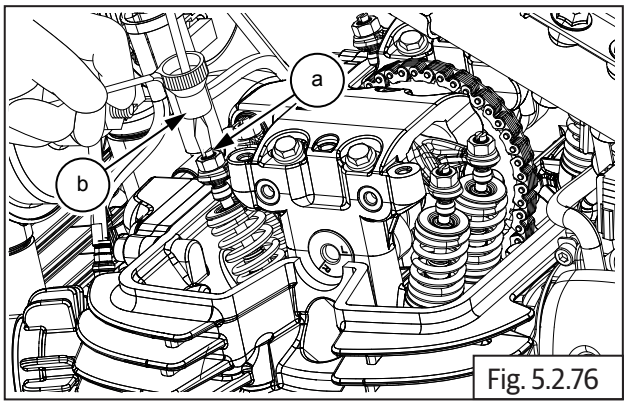

Fig. 5.2.76

- Locate feeler strip **(a)** between adjuster screw and valve stem as per thickness mentioned below.

For intake	0.08 mm
For exhaust	0.18 mm

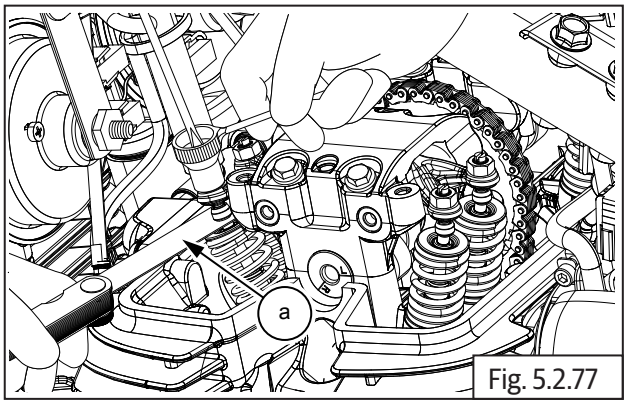

Fig. 5.2.77

- Gently pull out feeler strip **(a)** and check if it comes out freely OR with resistance.

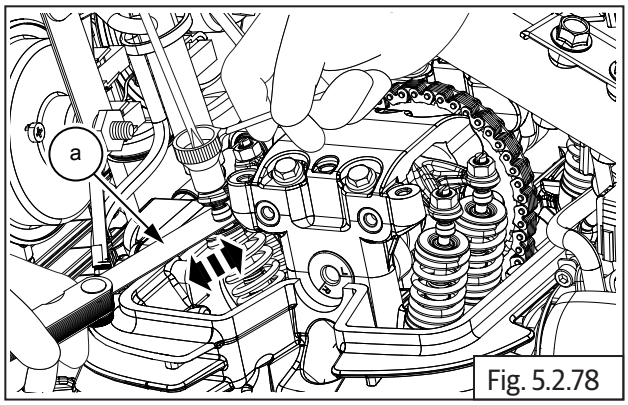

Fig. 5.2.78

- In case feeler strip comes out freely the adjuster screw has to be tightened.
- In case feeler strip movement is hard, the adjuster screw must be loosened.
- Tighten/loosen adjuster screw using screw driver, while simultaneously checking correct and smooth movement of feeler strip.
- Ensure tappet adjusting tool **(a)** does not rotate while adjusting the screw.

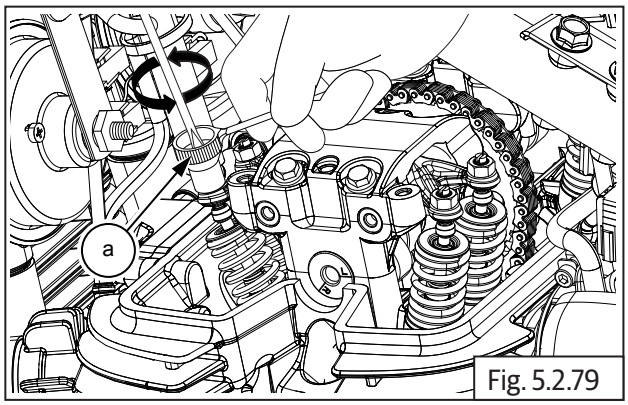

Fig. 5.2.79

- After setting correct gap, remove feeler strip, hold screw driver firmly such that the setting **DOES NOT** gets disturbed and gently lock the lock nut against rocker arm using special tool **(a)**.

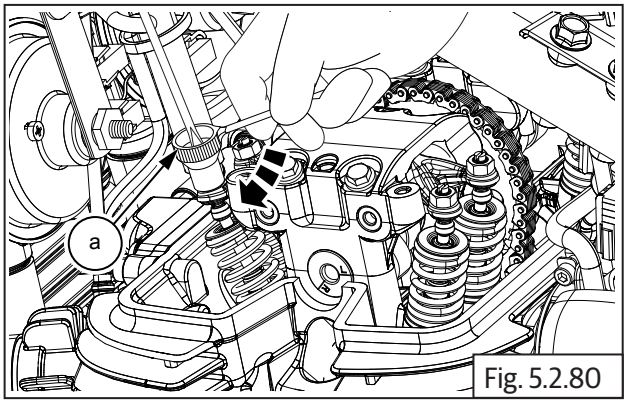

Fig. 5.2.80

- Repeat above steps to adjust the other tappet in cylinder head LH.

	10 mm Socket and Torque wrench
Torque	8-10 N-m/0.8-1 kgf-m

NOTE

- *Reconfirm correctness of tappet clearances before final locking of lock nuts.*

⚠ CAUTION

Do not adjust tappets with less OR no clearance as it will result in poor compression, valve burn-out and wear-out of tappet adjuster foot.

Do not adjust tappet with high clearance as will result in noise and insufficient opening of the valves.

- Remove screw driver and both special tools after adjustment is complete.

Tappet Clearance Cylinder Head RH

- Ensure "R" mark on camshaft **(a)** is aligned to cylinder head.

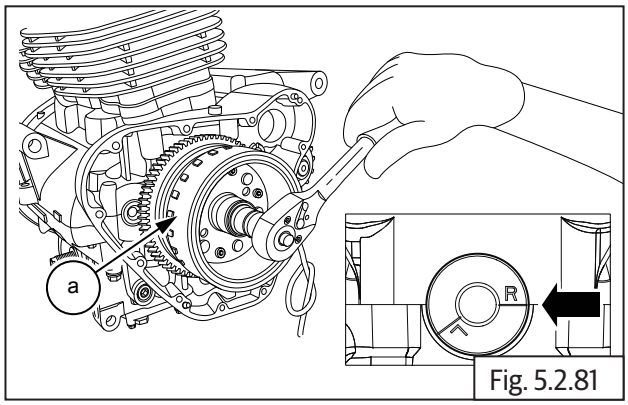

Fig. 5.2.81

- Adjust the tappets clearances as mentioned in tappets adjustment LH.

5.2.26. Cover Cylinder Head

NOTE
• *Ensure the cover-cylinder head seating surface and gasket seating groove are clean.*
• *Ensure sealant is applied in head gasket groove before assembly.*

- Locate new rubber gasket in the groove in cylinder head cover and ensure it is properly and evenly seated.

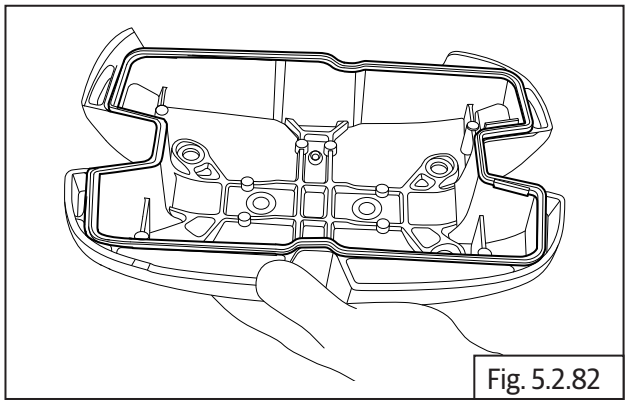
Fig. 5.2.82

- Locate cylinder head cover **(a)** on cylinder head with its narrow slot facing towards the front of the engine.

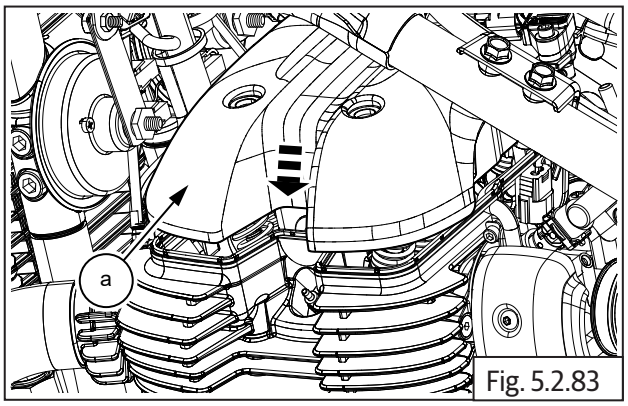

Fig. 5.2.83

- Assemble new seal washers **(a)** on the 4 Nos. Hex flange head bolts **(M6) (b)**.
- Locate the bolts on cylinder head cover **(c)** and tighten bolts to cylinder head evenly to specified torque.

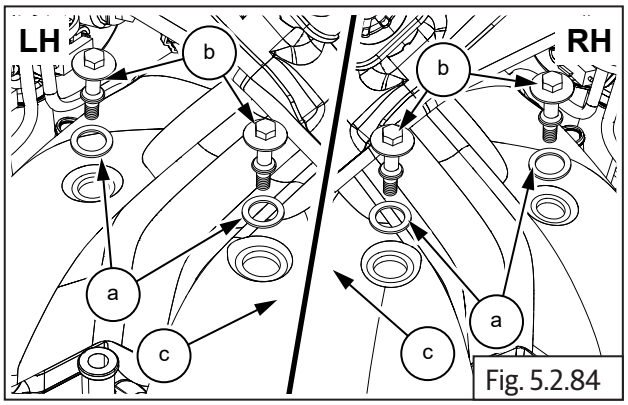

Fig. 5.2.84

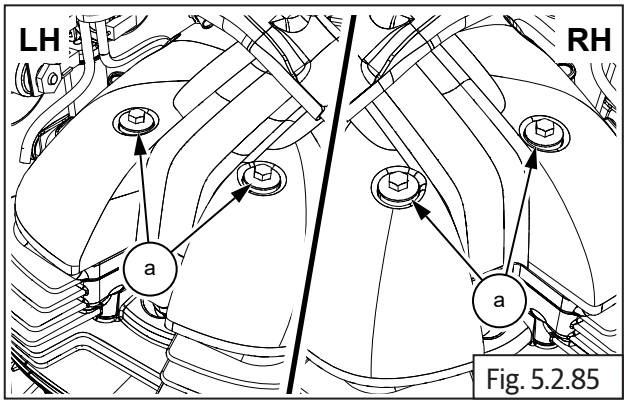

Fig. 5.2.85

	8 mm Socket with Torque wrench
Torque	10-12 N-m/1.0-1.2 kgf-m

5.2.27. Inlet Manifold Rubber Flanges LH & RH

- Locate the 2 Nos. inlet manifold rubber flanges **(a)** on the cylinder heads, duly ensuring the "cut away" in the manifolds are matching with the "cut away" in the cylinder head.

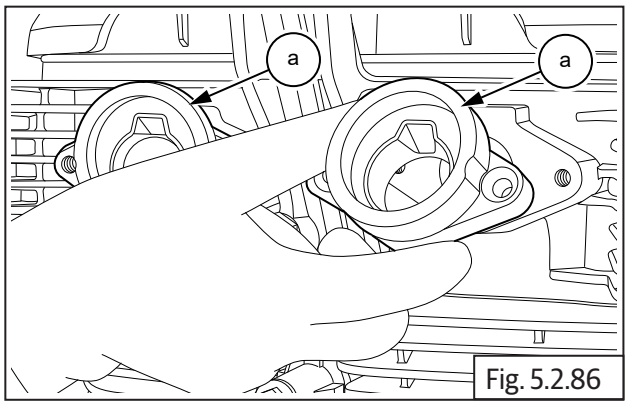

Fig. 5.2.86

- Locate and tighten 2 each countersunk socket head bolts **(M5) (a)** on the inlet manifold rubber flanges LH & RH.

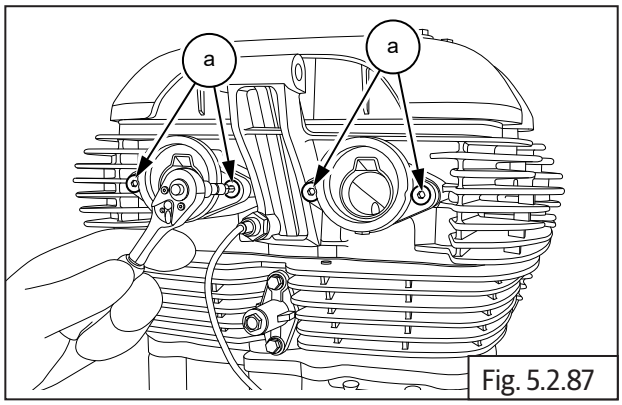

Fig. 5.2.87

	4 mm Allen socket and Torque wrench
Torque	2-3 N-m/0.2-0.3 kgf-m

5.2.28. Throttle Body

- Ensure clips **(a)** are in position on inlet manifolds LH and RH and loosened sufficiently.
- Locate throttle body **(b)** on the inlet manifold **(c)** and ensure it is properly seated on both LH and RH inlet manifolds fully.

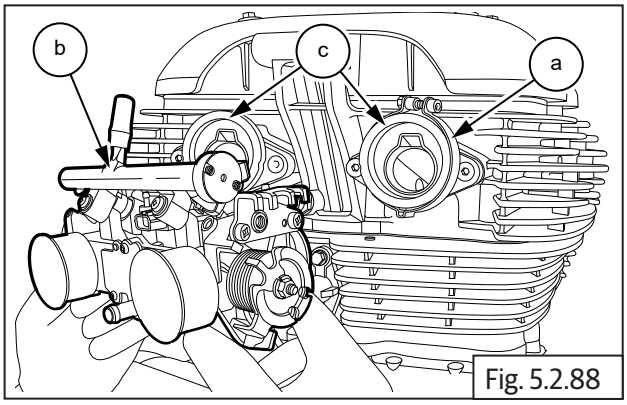

Fig. 5.2.88

- Tighten both clips screws **(M6) (a)** sufficiently over inlet manifolds LH & RH.

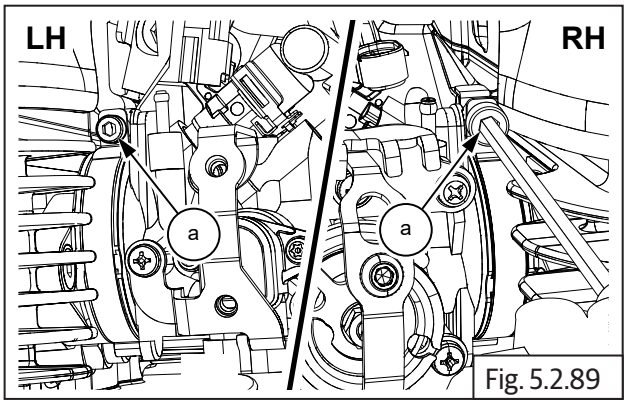

Fig. 5.2.89

	5 mm Allen socket with Ratchet

5.2.29. Air Filter Hoses On Throttle Body

- Ensure clips **(a)** are in position on air filter hoses and loosened sufficiently.
- Locate air filter hoses **(b)** on throttle body **(c)** and ensure they are properly seated on the throttle body.

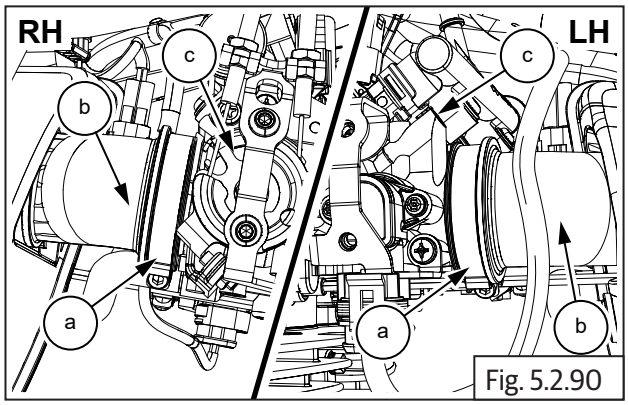

Fig. 5.2.90

- Tighten both clips screws **(M6) (a)** sufficiently over the air filter hoses.

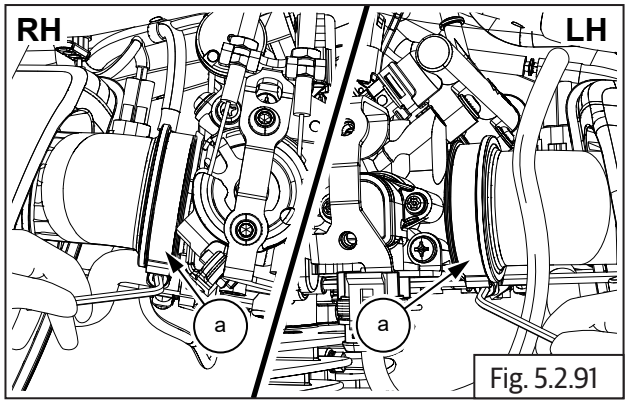

Fig. 5.2.91

	5 mm Allen socket with Ratchet

5.2.30. Throttle Cables

- Assemble throttle cables on throttle body..

5.2.31. Injector, TPS, MAPS, ISC Connections

Injector, Throttle Position Sensor (TPS), Manifold Absolute Pressure Sensor (MAP) and Idle Speed Controller (ISC) Connections

- Connect the LH and RH injector connectors **(a)** located on throttle body **(b)**.

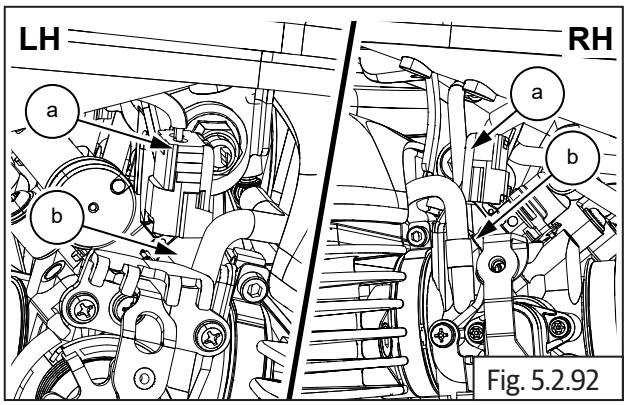

Fig. 5.2.92

- Connect TPS connector **(a)** to sensor **(b)** at bottom of throttle body.

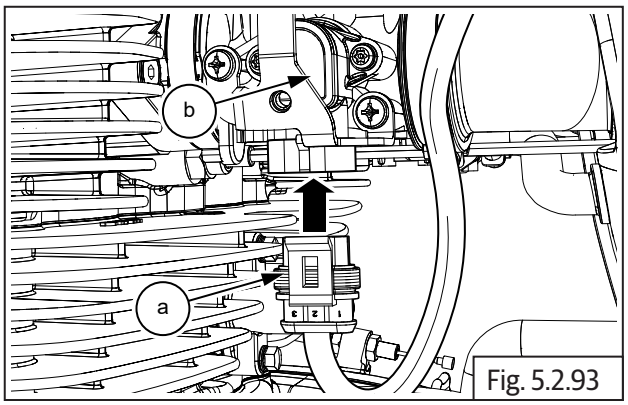

Fig. 5.2.93

- Connect idle speed sensor connector **(a)** on throttle body **(b)**.

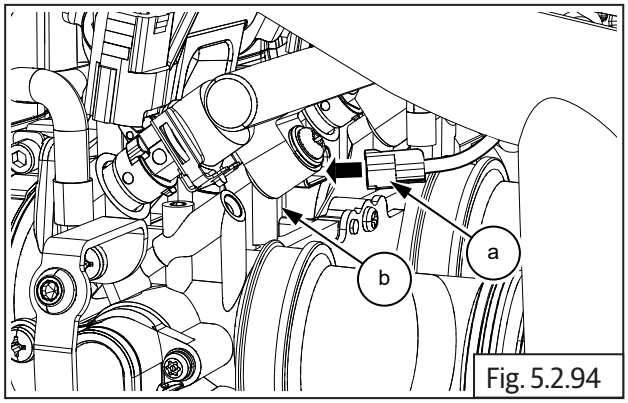

Fig. 5.2.94

- Connect purge valve hoses **(a)** to the inlet pipes on the top of the throttle body.

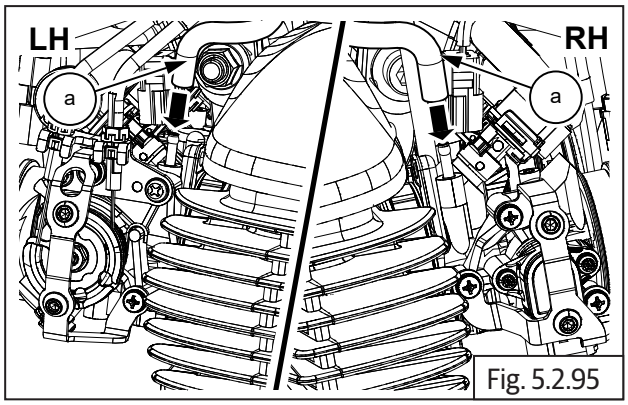

Fig. 5.2.95

5.2.32. Throttle Body Covers on LH and RH

- Locate throttle body covers **(b)** on both LH and RH of throttle body.
- Insert and tighten 2 Nos. Hex Allen bolts **(M5) (a)** into LH throttle body cover **(b)**.
- Insert and tighten 2 Nos. Hex Allen bolts **(M5) (a)** into RH throttle body cover **(b)**.

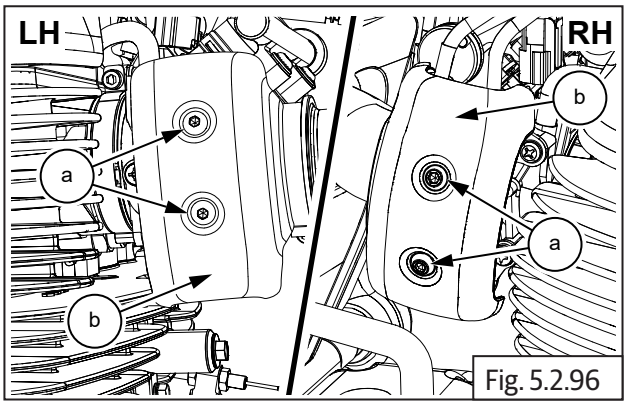

Fig. 5.2.96

	4 mm Allen Key

- Position ABS modulator with bracket on frame and tighten with bolts.
- Assemble the following parts:
  - Horn and electrical connections.
  - Connect HT cable.
  - Fuel tank.
  - Side panels LH.
  - Rider seat assembly.
  - Assemble RH side panel.

5.2.33. Spark Plugs

- Locate and tighten spark plug **(a)** to RH cylinder head.

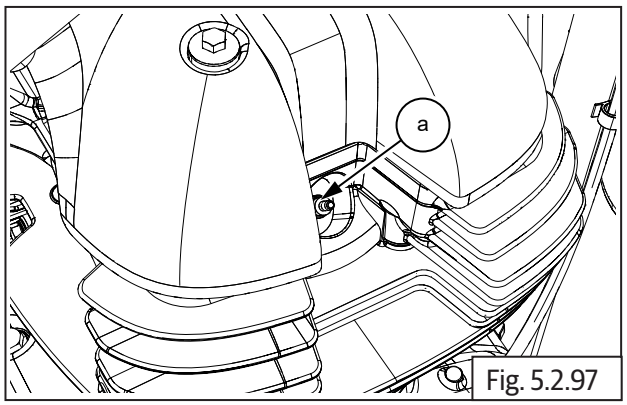

Fig. 5.2.97

	16 mm Socket with Ratchet

- Repeat the procedure to assemble LH spark plug.

NOTE
• *Apply Loctite Anti - Seize LB 804 on the threads of the Spark Plug before installation*

5.2.34. Spark Plug Suppressor Caps

Spark Plug Suppressor Caps on LH and RH Cylinder Heads

- Locate spark plug suppressor cap **(a)** on spark plug in LH cylinder head **(b)**.

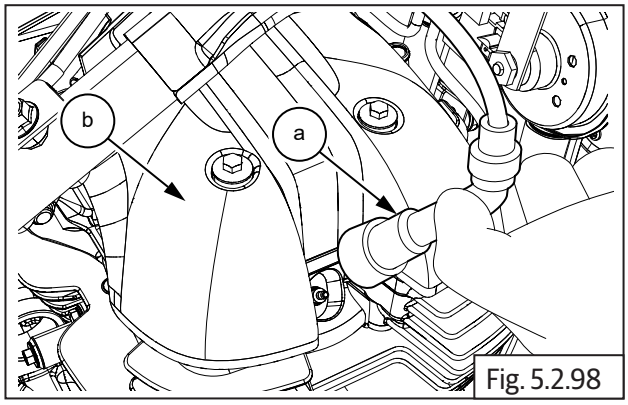

Fig. 5.2.98

- Locate spark plug suppressor cap **(a)** on spark plug in RH cylinder head **(b)**.

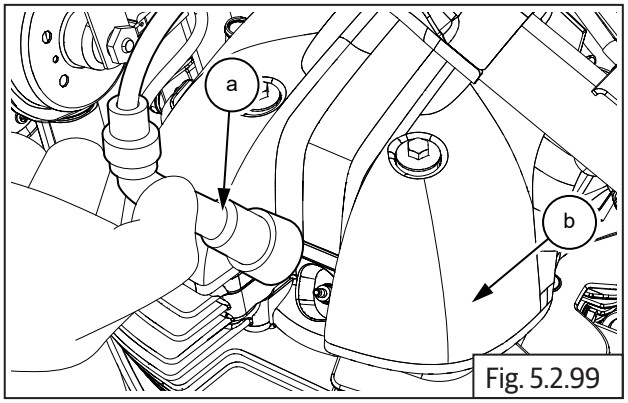

Fig. 5.2.99

5.2.35. Star Index

- Locate and tighten 2 Nos. Hex head bolts **(M6) (a)** on selector fork shaft stopper plate.

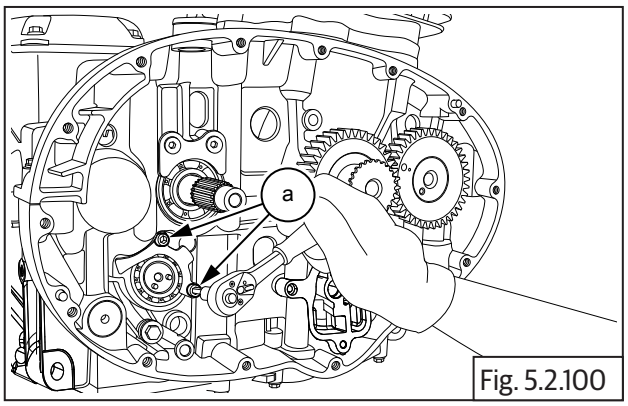

Fig. 5.2.100

	5 mm Allen socket with Torque wrench
Torque	12 N-m/1.2 kgf-m

- Locate and tighten Hex socket head stepped bolt **(M6) (a)** on gear shift cam drum.

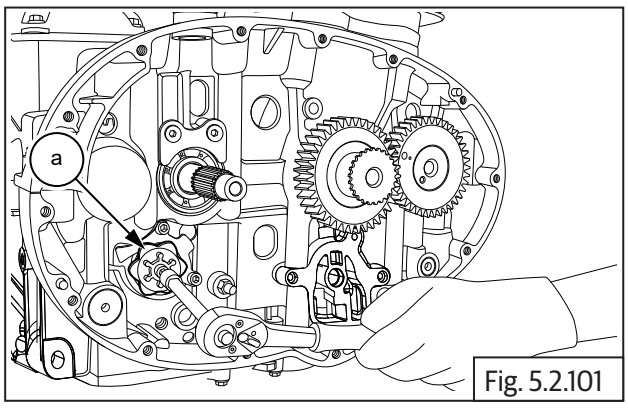

Fig. 5.2.101

	5 mm Allen socket with Ratchet

5.2.36. Star Index Stopper

- Locate spring and stopper plate support **(a)** on RH lower crankcase and assemble Hex head flange bolt.

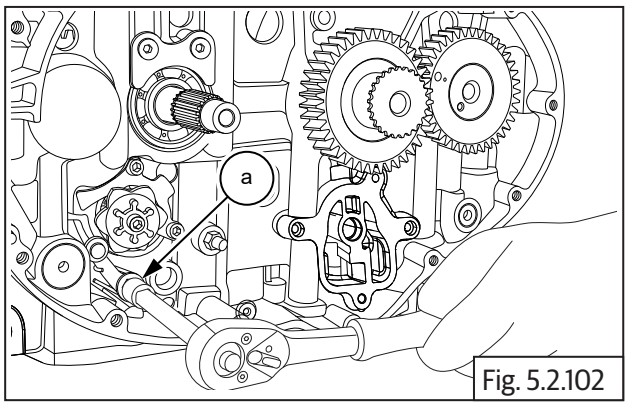

Fig. 5.2.102

	10 mm Socket with Torque wrench
Torque	12 N-m/1.2 kgf-m

NOTE
• *Handle stopper plate tension spring carefully else it may damage supporting components.*

5.2.37. Shifter Selector Shaft Assembly

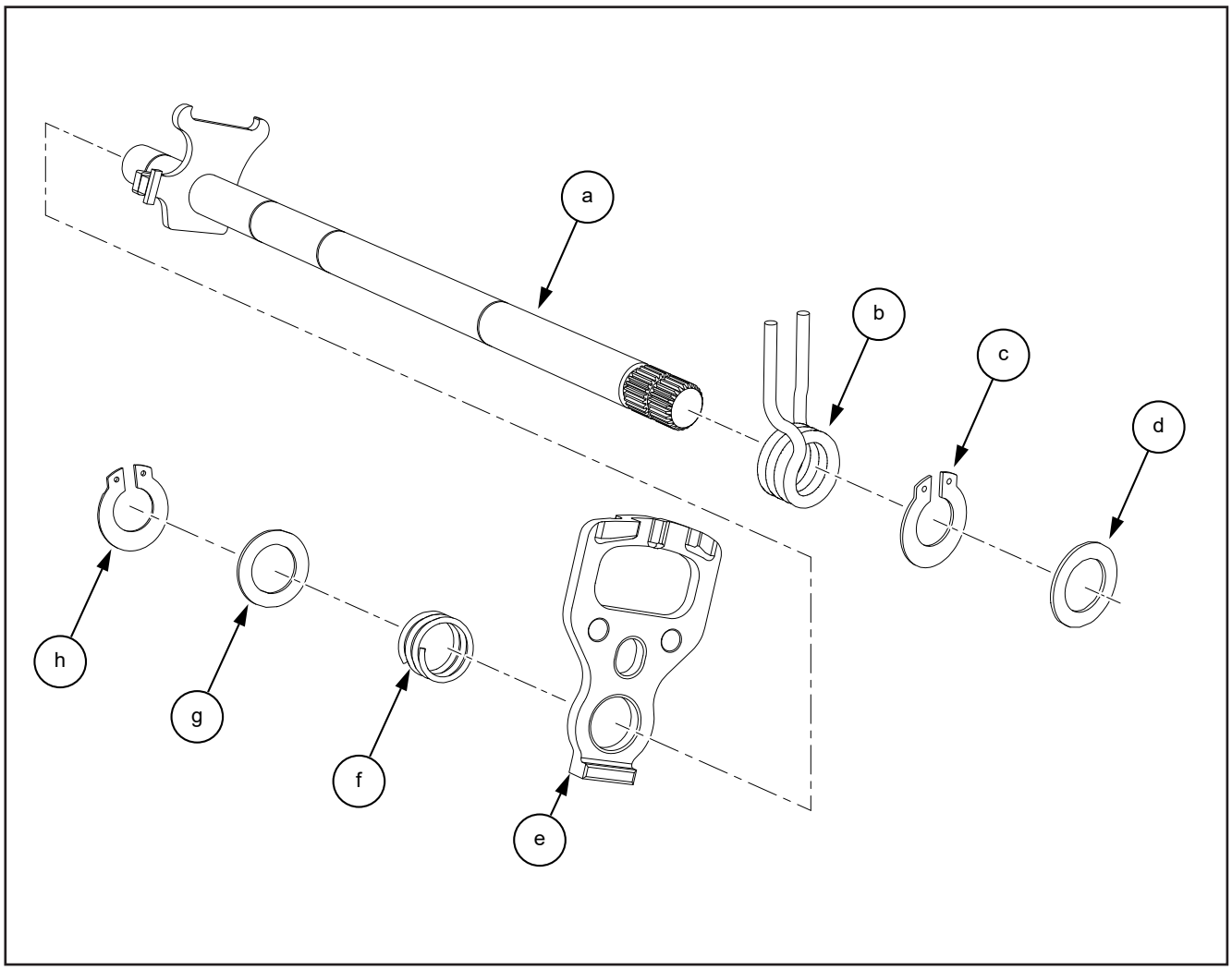

Item No.	Description	Quantity
a	Shifter shaft	1
b	Spring	1
c	Circlip	1
d	Washer	1
e	Outer plate	1
f	Spring	1
g	Washer	1
h	Circlip	1

- Assemble the circlip **(a)** to the shifter shaft **(b)**.

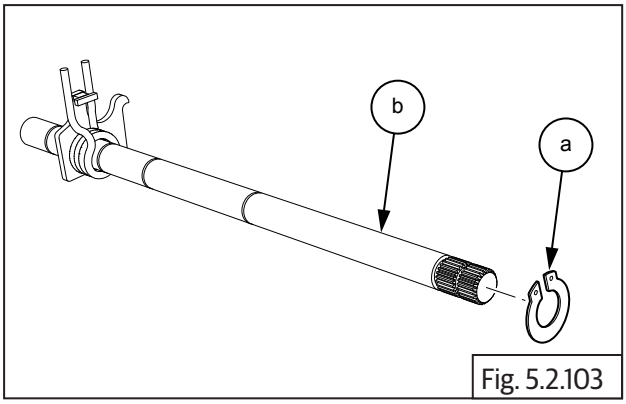

Fig. 5.2.103

	Circlip plier

- Assemble 1st inner washer **(a)** from the longer end of shifter shaft **(b)**.

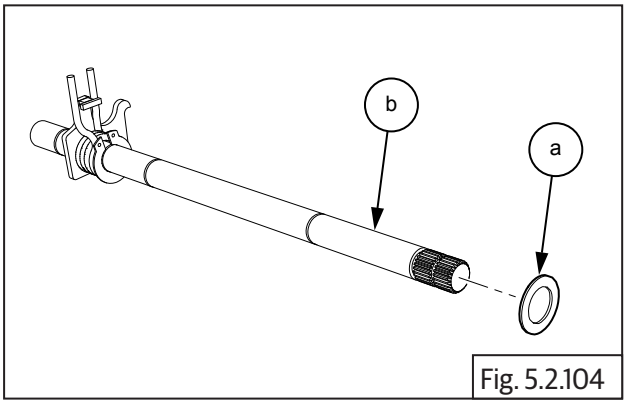

Fig. 5.2.104

- Assemble outer plate **(a)** from smaller end of shifter shaft with its projection facing towards the longer end of the shaft.
- Ensure the peg on the shifter shaft is located correctly in the hole on the outer plate **(a)**.

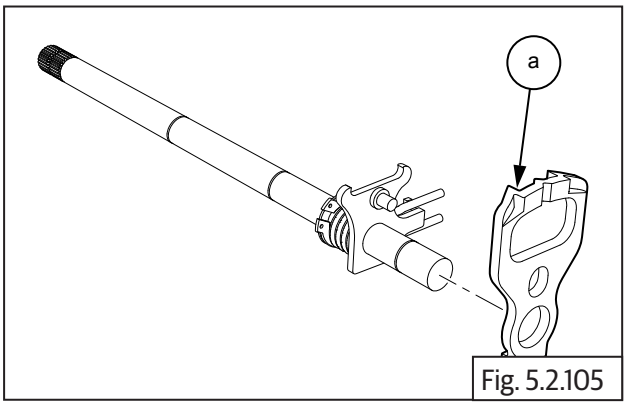

Fig. 5.2.105

- Assemble outer spring **(a)** from smaller end of shifter shaft.

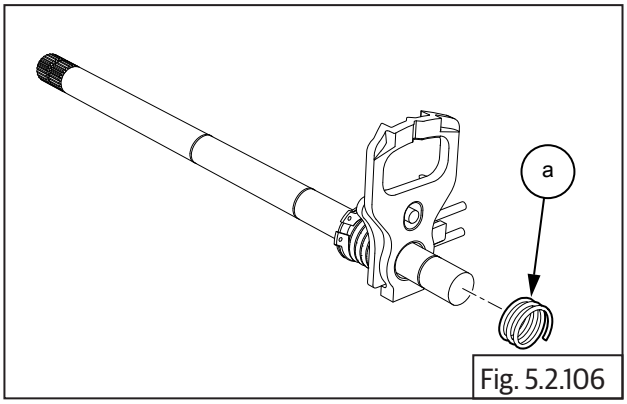

Fig. 5.2.106

- Assemble outer washer **(a)** from the smaller end of shifter shaft.

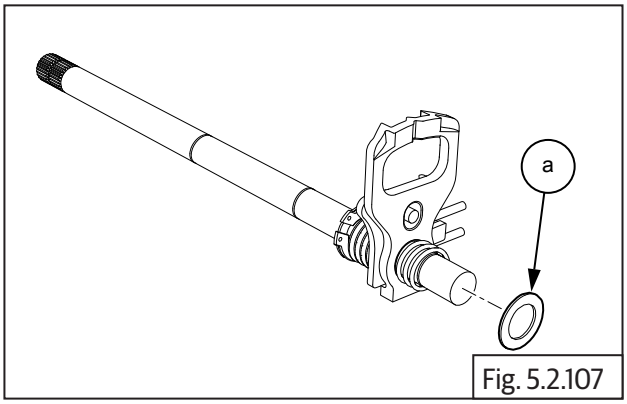

Fig. 5.2.107

- Assemble outer circlip **(a)** from smaller end of shifter shaft.

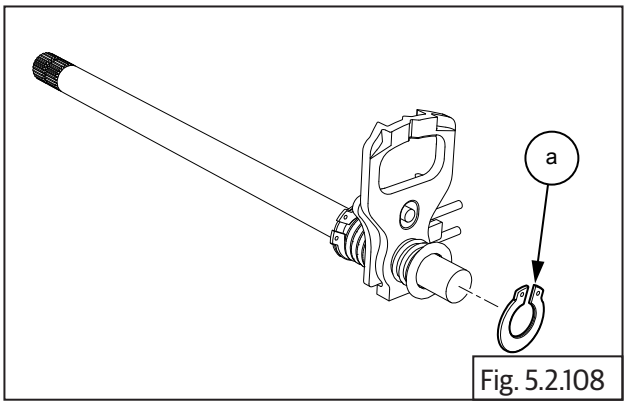

Fig. 5.2.108

	Circlip plier

- Insert longer end of the shifter shaft **(a)** into the hole in the lower crankcase from the RH side.
- Ensure the shifter plate is correctly seated over the star index.

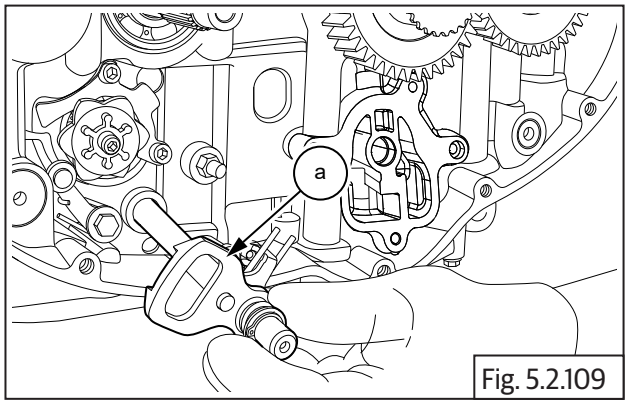

Fig. 5.2.109

- Assemble washer **(a)** on the shifter shaft on the LH side.

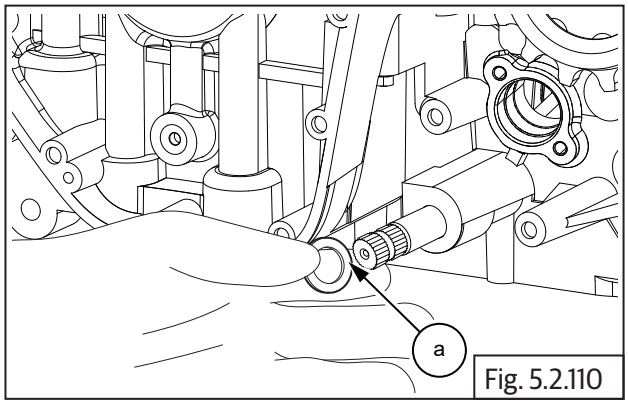

Fig. 5.2.110

- Assemble circlip **(a)** on the shifter shaft at the LH side and ensure it is correctly seated and locked in the groove on the shifter shaft.

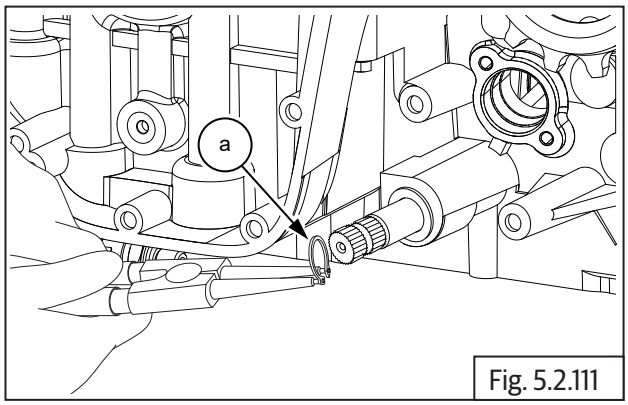

Fig. 5.2.111

	Circlip plier

5.2.38. Oil Pump

- Locate oil pump mounting point below crankshaft gear in RH crankcase.
- Assemble 4 Nos. Hex flange head bolts **(M6) (a)** on oil pump **(b)** and tighten bolts to specified torque.

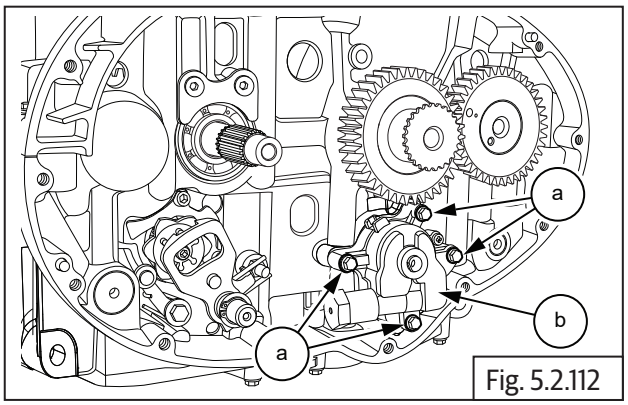

Fig. 5.2.112

	10 mm Socket with Ratchet
Torque	10-12 N-m/1.0-1.2 kgf-m

- Locate and fit oil pump drive chain **(a)** on crankshaft gear **(b)** and sprocket on oil pump.
- Pump Sprocket OUT and Pump Chain Coloured Link to be facing outside when assembling.

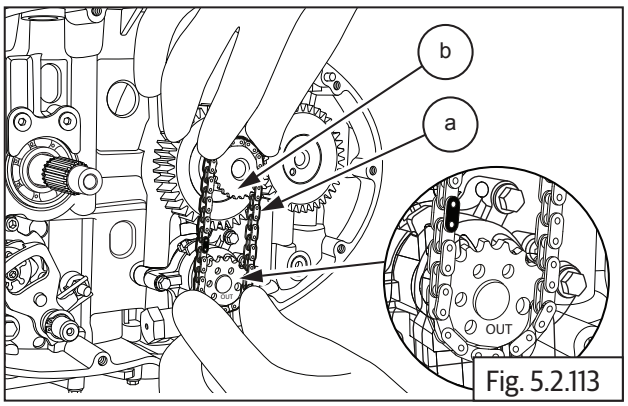

Fig. 5.2.113

- Locate Hex flange head bolt **(M6) (a)** on oil pump. **DO NOT TIGHTEN FULLY**.

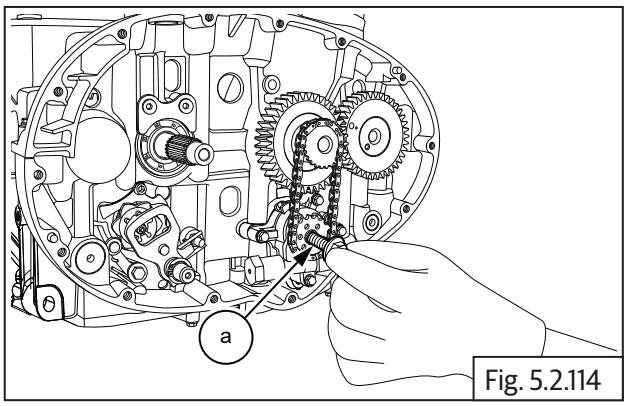

Fig. 5.2.114

- Tighten the bolt to specified torque.

NOTE
• *Lock the crank shaft by using special tool to prevent rotation while tightening bolt.*

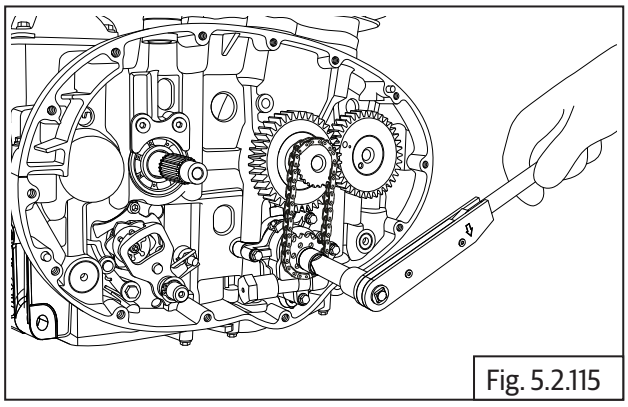

Fig. 5.2.115

	10 mm Socket with Torque wrench
Torque	10-12 N-m/1.0-1.2 kgf-m

5.2.39. Clutch Assembly

- Ensure collar on bush **(a)** is facing inward and assemble it on countershaft **(b)**. Ensure it is seated properly.

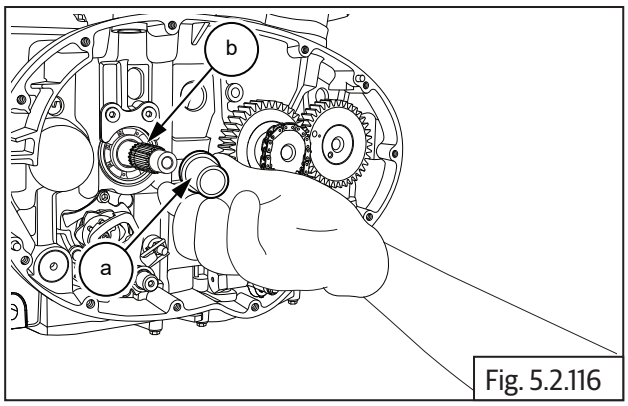

Fig. 5.2.116

- Assemble needle bearing **(a)** on countershaft **(b)**.

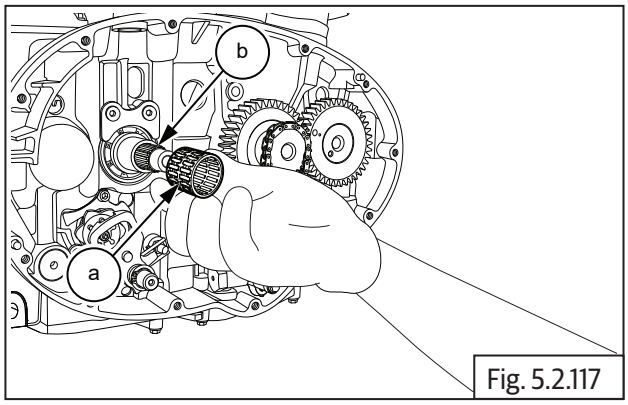

Fig. 5.2.117

- Locate clutch housing **(a)** on counter shaft, with its lugs **(b)** facing outside.
- Ensure the clutch housing gear is correctly meshed with the gear on crankshaft.

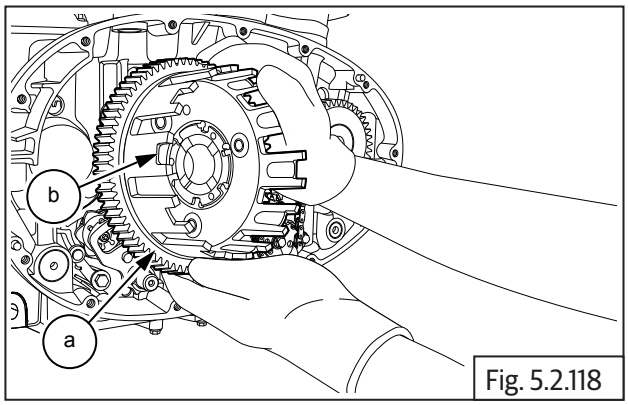

Fig. 5.2.118

- Assemble thrust washer **(a)** on countershaft.

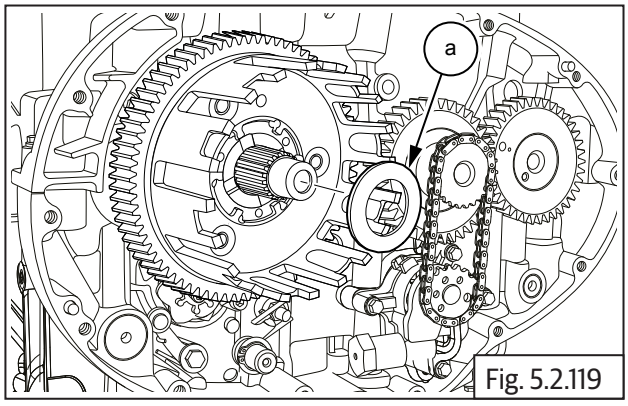

Fig. 5.2.119

- Locate bell assembly **(a)** on the splines on counter shaft **(b)**.

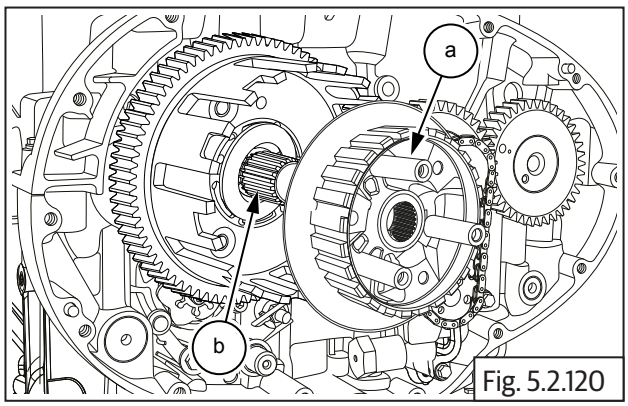

Fig. 5.2.120

- Locate the anti-judder steel washer-plain, in the groove in the clutch bell.
- Assemble Belleville washer over judder washer in the clutch bell. ENSURE THE "HUMP" OF THE BELLEVILLE WASHER IS FACING INSIDE AND SEATED AGAINST THE JUDDER WASHER.
- Assemble 1st friction plate with larger ID (less friction area) ensuring the splines of the plate are correctly positioned and located on the clutch housing.
- Assemble 1st steel plate ensuring the splines on the plate are correctly positioned and located on the clutch bell.
- Assemble 2nd friction plate on the clutch housing and ensure it is seated against the 1st steel plate.
- Assemble 2nd steel plate on clutch bell.
- Assemble 3rd friction plate on clutch housing.

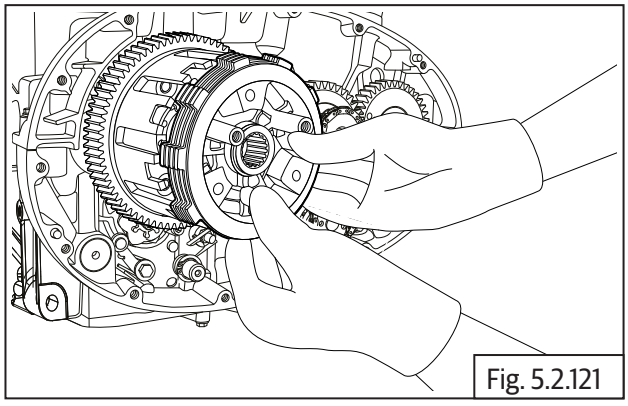
Fig. 5.2.121

- Assemble washer **(a)** on countershaft.

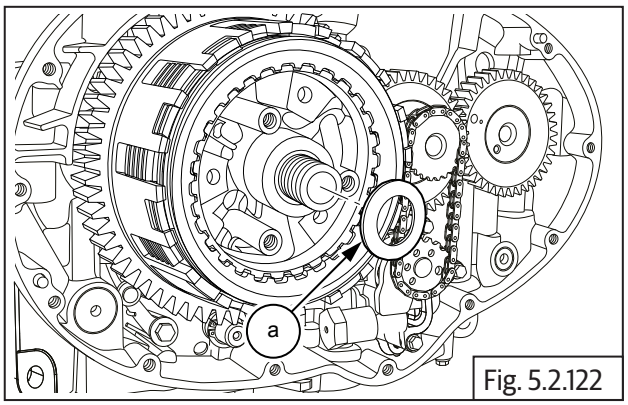

Fig. 5.2.122

- Locate the Hex "U" nut **(M17) (a)**.

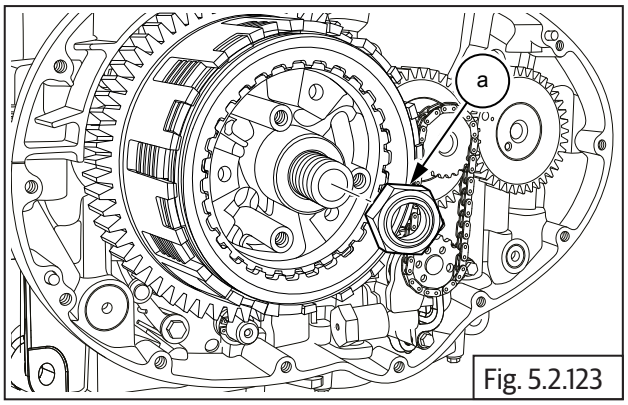

Fig. 5.2.123

⚠ CAUTION

Hex U nut is left hand thread. Turn anticlockwise to tighten nut on shaft.

- Locate and hold special tool on clutch assembly and tighten clutch hub nut to specified torque.

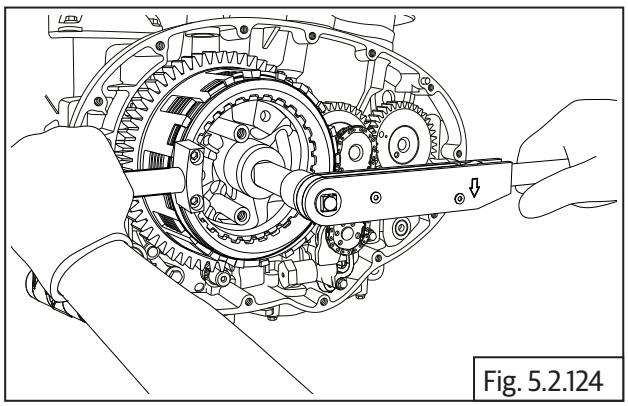

Fig. 5.2.124

SPL 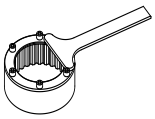	Part No: ST-27558-1
	Part Name: Clutch plate holder with Torque wrench
Torque	110-130 N-m/11.0-13.0 kgf-m

- Remove special tool and further assemble the following
  - 3rd steel plate on clutch bell.
  - 4th Friction plate on clutch housing.
  - 4th steel plate on clutch bell.
  - 5th Friction plate on clutch housing.
  - 5th steel plate on clutch bell.

- Locate 6th friction plate **(a)** with larger ID (less friction area) on clutch hub **(b)** and ensure it is seated properly against the inner face of the clutch hub.

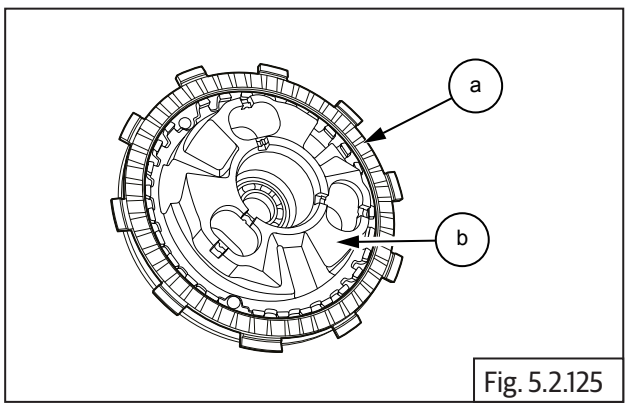

Fig. 5.2.125

- Locate 6th steel plate **(a)** on the splines in clutch hub **(b)** and ensure it is properly seated against the 6th friction plate.

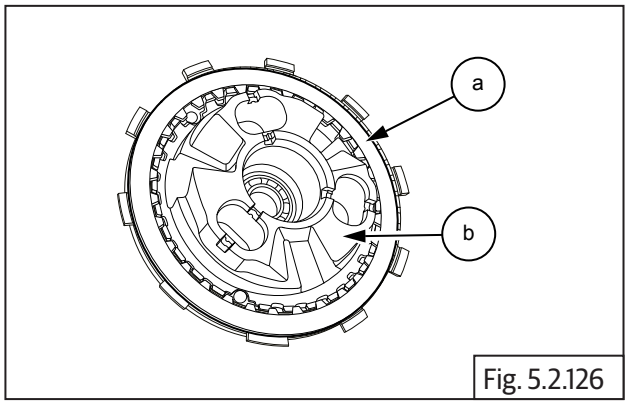

Fig. 5.2.126

- Locate 7th friction plate **(a)** with larger ID (less friction area) on clutch hub **(b)** such that its lugs are offset and between 2 lugs of the 6th friction plate.

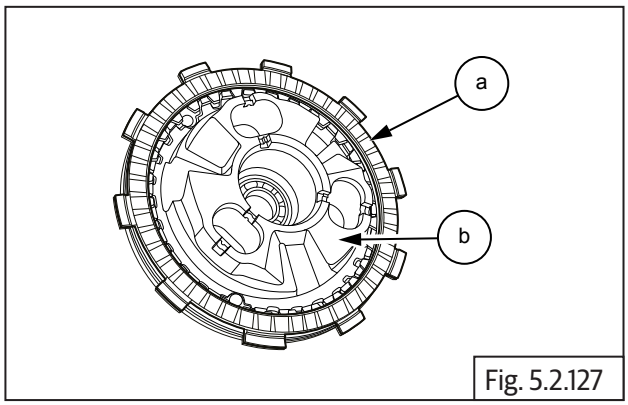

Fig. 5.2.127

- Locate clutch hub **(a)** into clutch bell duly ensuring the following
- Insert pull rod **(b)** into clutch housing from the inside, such that the serrations on the pull rod are facing outside.
- Ensure pull rod is fully and properly seated against the bearing on the inside.

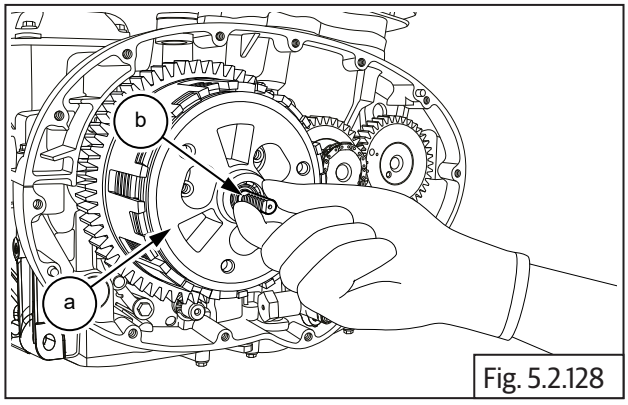

Fig. 5.2.128

- The outer lugs of 7th friction plate are correctly located in the INNER slots of the clutch housing.
- The outer lugs of 6th friction plate are correctly located in the OUTER slots of the clutch housing.
- The 3 lugs of the clutch hub are correctly positioned between the 3 slots in the clutch bell (Gently rotate clutch hub back and forth, to match the slots of the clutch bell).
- The three mounting studs of the clutch bell are central to the slots in the clutch hub.
- Insert 3 Nos. compression springs **(a)** in hub.

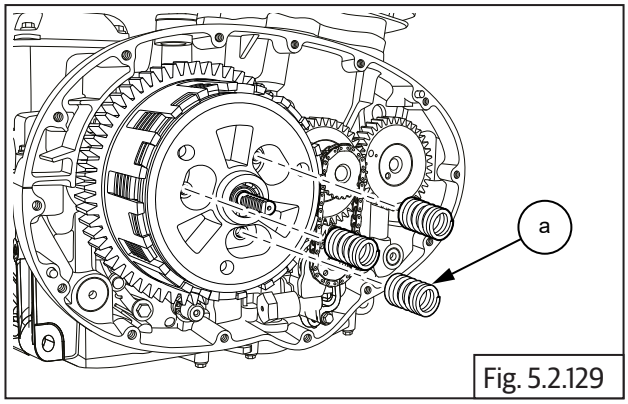

Fig. 5.2.129

- Locate pressure plate **(a)** on clutch hub with the words **"OUT"** and **"FR"** facing outside.
- Assemble 3 Nos. Hex bolts **(M6) (b)** and tighten pressure to clutch hub, sequentially to specified torque.

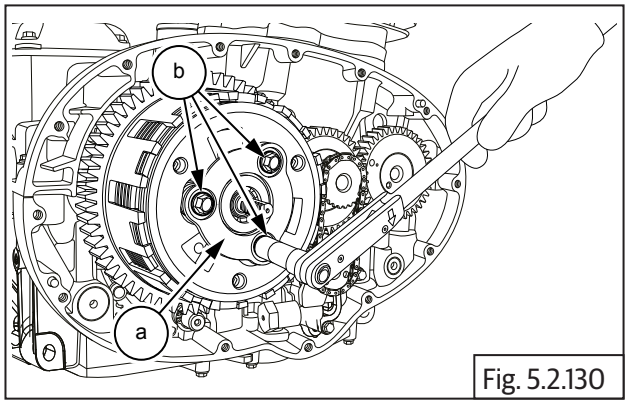

Fig. 5.2.130

	10 mm Socket with Torque wrench
Torque	10-12 N-m/1.0-1.2 kgf-m

5.2.40. Oil Level Window on Clutch Cover

- Locate new oil window **(a)** on clutch cover with the window facing towards clutch cover outer and gently press till it is seated fully inside.

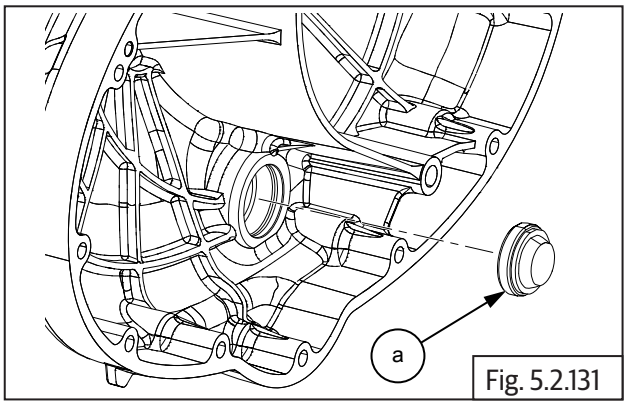

Fig. 5.2.131

NOTE
• *Apply Loctite 243 around the Oil Level Inspection window before installing in the clutch case.*

- Assemble circlip **(a)** in the groove in clutch cover and ensure it is correctly locked in the clutch cover.

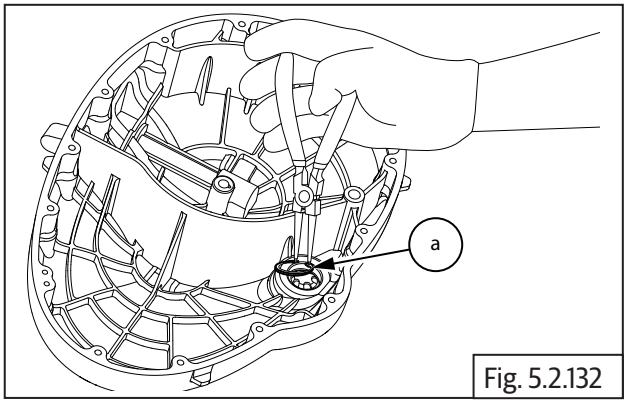

Fig. 5.2.132

	Circlip plier

5.2.41. Clutch Actuating Lever Assembly

- Ensure needle bearings **(a)** are assembled in the clutch cover.

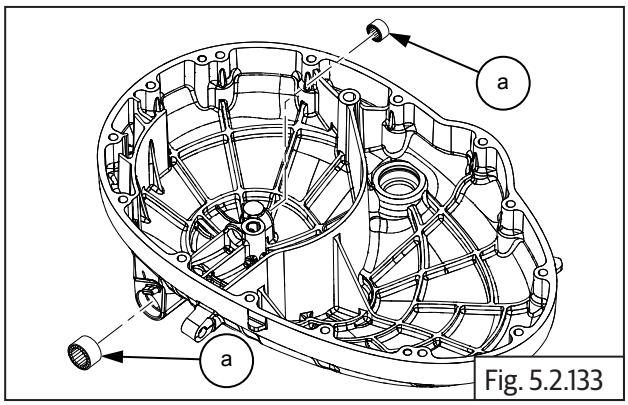

Fig. 5.2.133

SPL 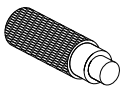	Part No: ST-30262-A Part Name: Clutch act lever top BRG Inst

SPL 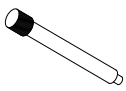	Part No: ST-30261-A Part Name: Clutch act lever btm BRG Inst

- Insert clutch actuating shaft **(a)** into clutch cover **(b)** with the gear facing inside and the splines facing outside.

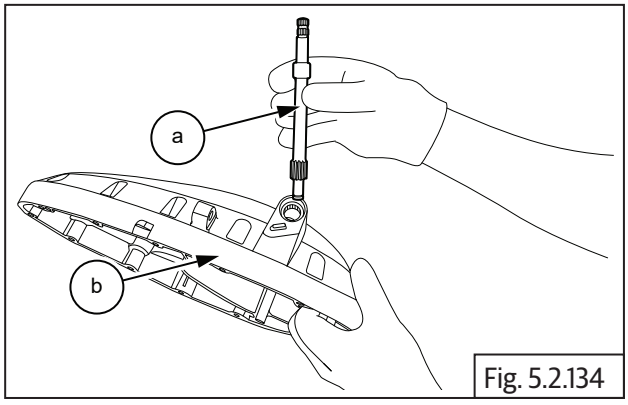

Fig. 5.2.134

- Assemble washer **(b)** on the shaft bottom inside the clutch cover.
- Assemble E-clip **(a)** in the slot in shaft bottom inside clutch cover.

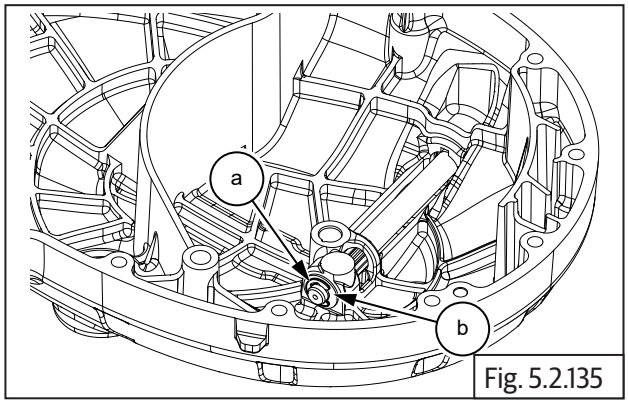

Fig. 5.2.135

	Nose plier

- Assemble oil seal **(a)** in clutch cover at the top with the lips facing down.
- Assemble washer **(b)** above oil seal.

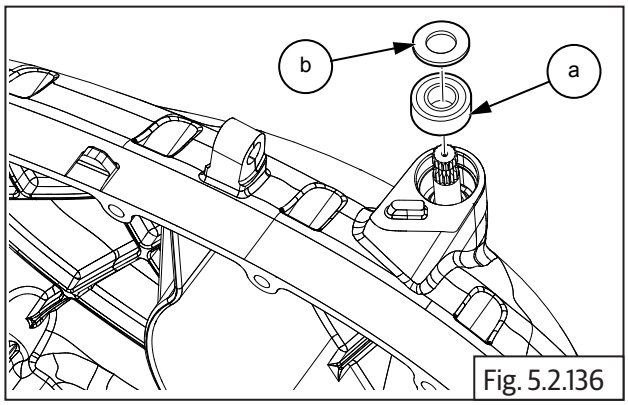

Fig. 5.2.136

5.2.42. Clutch Cover

- Ensure the dowel pins **(a)** are seated properly on the upper and lower crankcases on RH side.

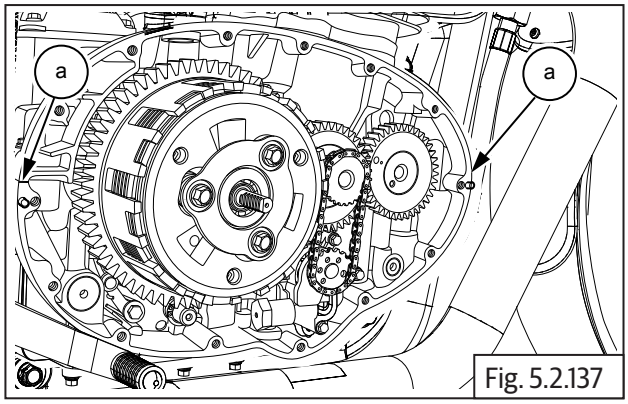

Fig. 5.2.137

NOTE
• *Apply Loctite 5910 over the dowel pins* **(a)**

- Install gasket **(a)** on the crankcase if necessary smear engine oil and ensure it is properly seated on dowels. **Do not use any sealant OR adhesive**.

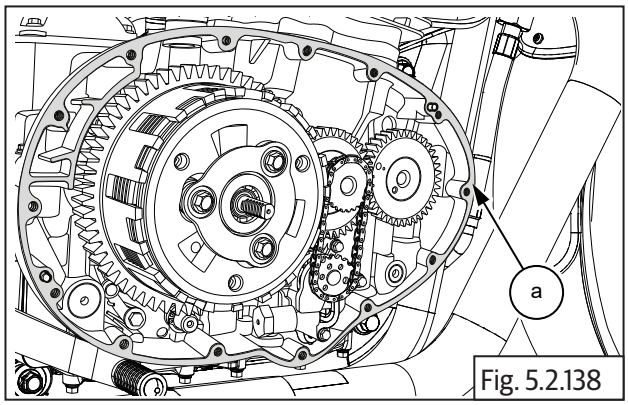

Fig. 5.2.138

- Ensure racks on the clutch pull rod is facing towards the rear of the engine.
- Hold the clutch cover **(a)** in position, rotate the clutch actuating shaft to ensure it is engaged correctly with the pull rod and gently tap cover inside, till it seats fully on the dowels and crankcase.

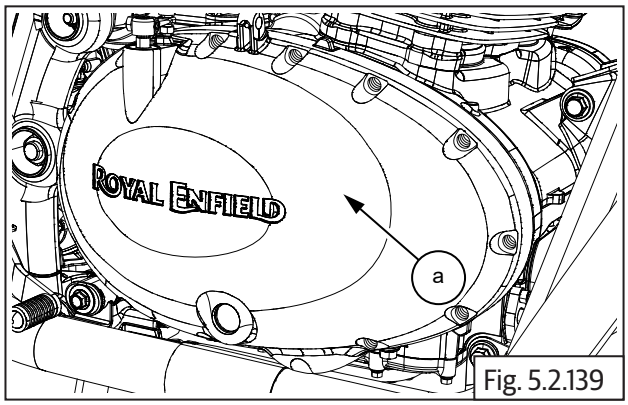

Fig. 5.2.139

- Locate 14 Nos. Hex socket bolts **(M6) (a)** on clutch cover and tighten them in crisscross pattern.

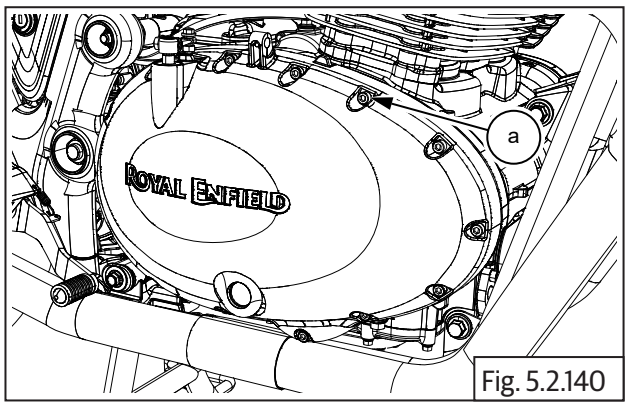

Fig. 5.2.140

- Rotate clutch shaft **(b)** clockwise till it stops.
- Ensure pinch bolt is sufficiently loose, position actuating lever on shaft at 11 'O' clock position and ensure the inner side of the lever is aligned to the reference mark **(a)** on the clutch cover.

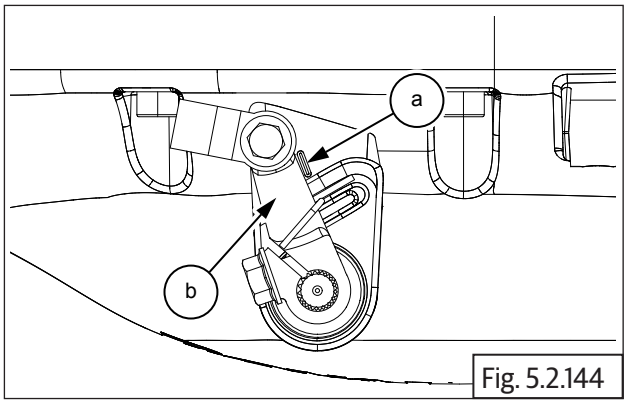

Fig. 5.2.144

- Tighten pinch bolt sufficiently such that the lever is firmly clamped on the shaft.
- Position the upper leg of the spring against the inside of the lever and check for proper spring action.

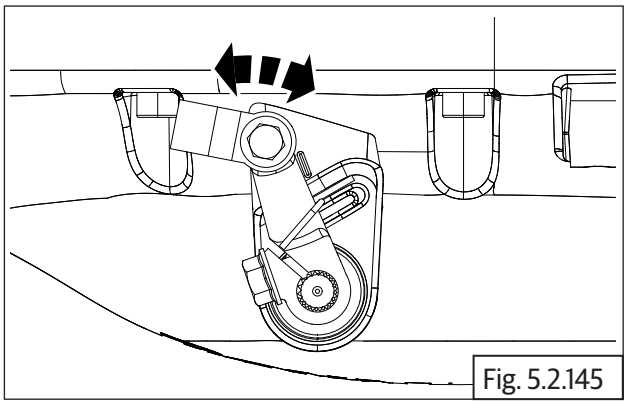
Fig. 5.2.145

5.2.44. Clutch Cable on Clutch cover

- Assemble clutch cable assembly **(a)** on clutch lever **(b)**. Refer clutch cable assembly procedure. (Refer-------)

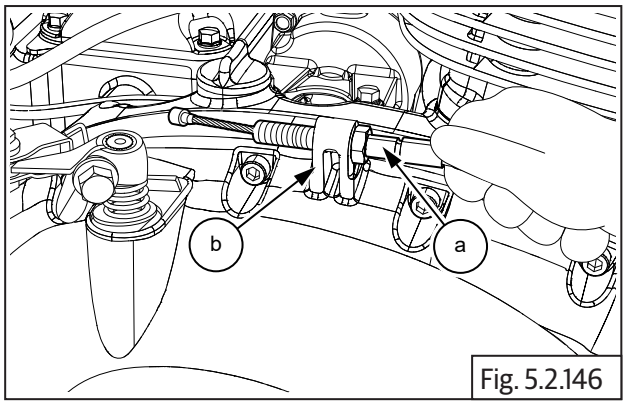

Fig. 5.2.146

5.2.45. FD Sprocket

- Assemble spacer **(a)** on drive shaft **(b)** on the LH side.

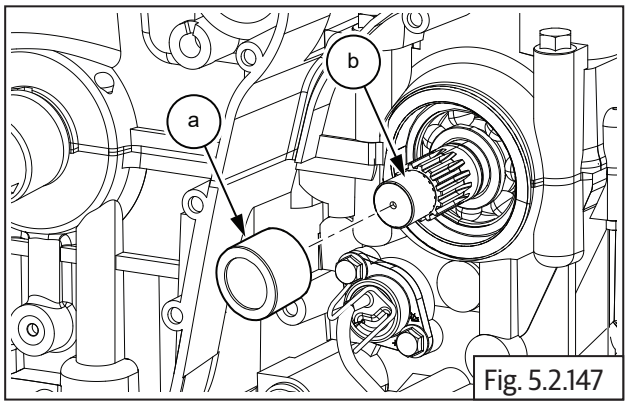

Fig. 5.2.147

- Locate oil seal **(a)** on the crankcase on LH side with its open end facing inwards and tap it in gently till the outer surface of the oil seal is flush with the crankcase**(b)**.

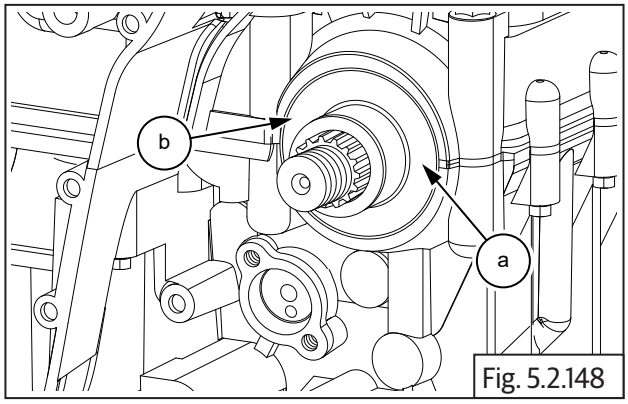

Fig. 5.2.148

- Assemble FD sprocket **(a)** on drive shaft **(b)**.

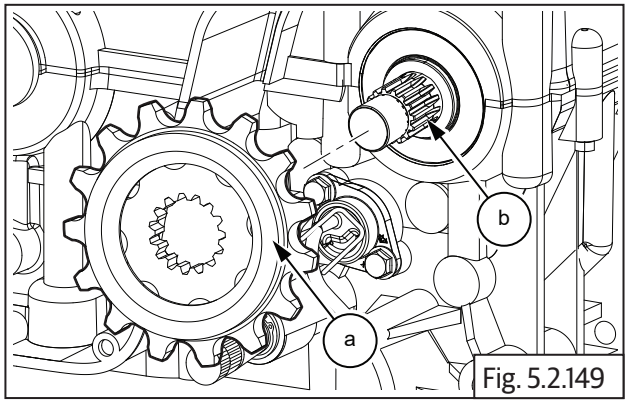

Fig. 5.2.149

- Install new tab washer **(a)** on drive shaft **(b)**.

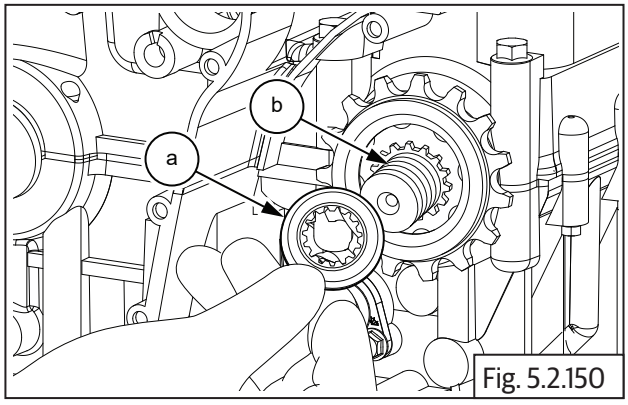

Fig. 5.2.150

- Assemble FD Sprocket "U" nut **(M20) (a)** on drive shaft.

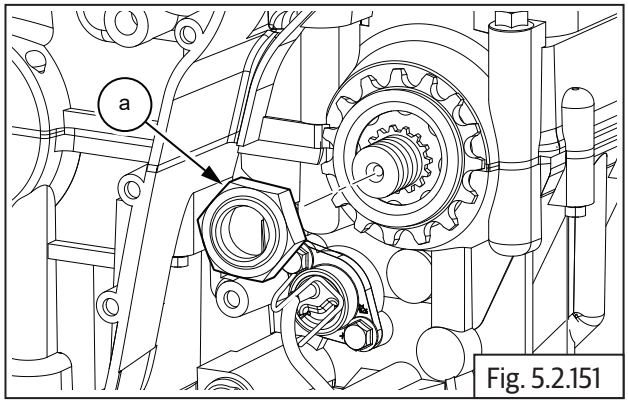

Fig. 5.2.151

- Locate special tool **(a)** over FD sprocket and tighten nut to specified torque.

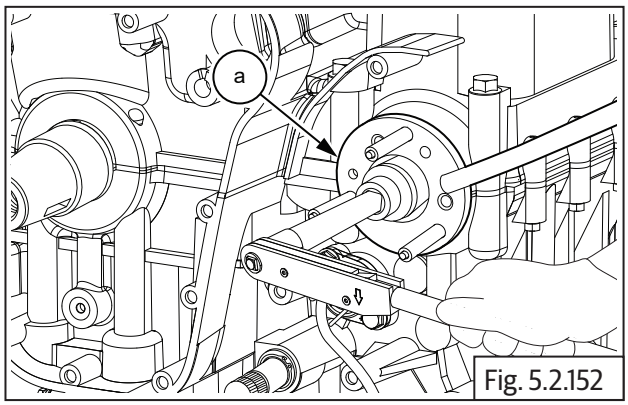

Fig. 5.2.152

SPL 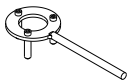	Part No: ST-27534-2 Part Name: FD Sprocket holder

	30 mm Socket with Torque wrench
Torque	130-160 N-m/13.0-16.0 kgf-m

- Gently bend the tab washer **(a)** outer, to seat against a flat surface of the hex nut **(b)** with a flat chisel to prevent the nut from loosening during use.

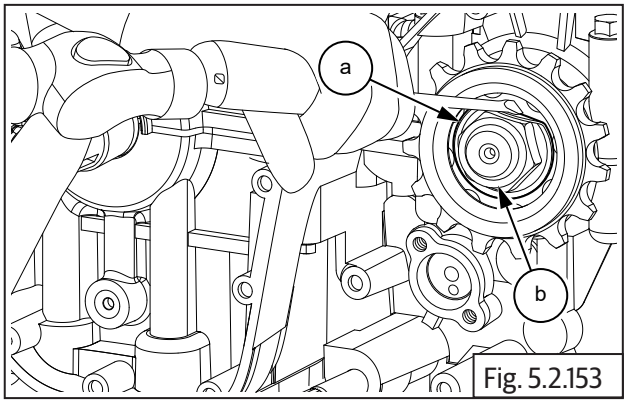

Fig. 5.2.153

	Chisel and Hammer

5.2.46. Rear Chain to FD Sprocket

- Locate drive chain **(a)** over the FD sprocket teeth **(b)**.

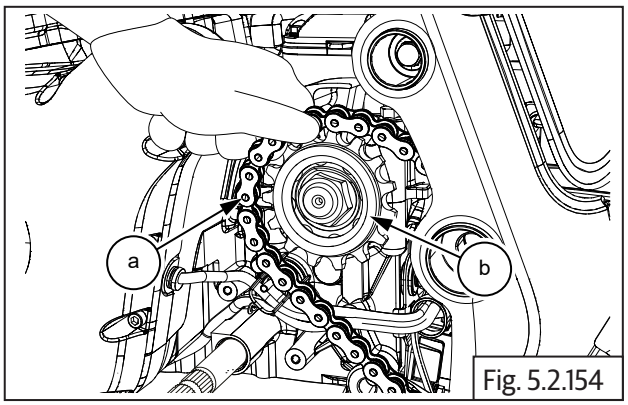

Fig. 5.2.154

- Ensure rear chain is properly seated on the rear wheel sprocket.
- Adjust rear chain tension as specified.

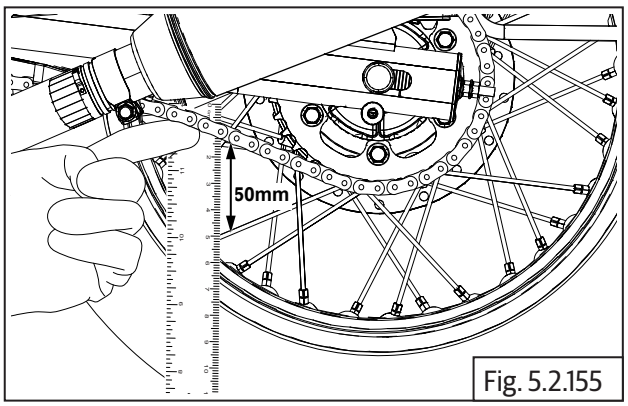

Fig. 5.2.155

5.2.47. Gear Position Sensor (GPS)

- Assemble the gasket **(c)** the Gear Position Sensor.
- Assemble gear position sensor on the LH side of lower crankcase duly ensuring the lug **(a)** in the GPS is located into the hole **(b)** in gear selector drum.

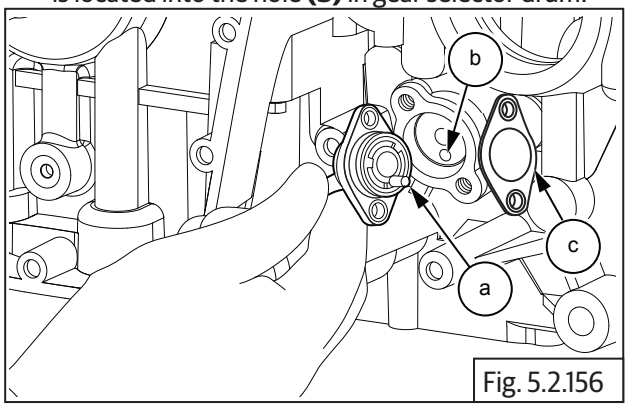

Fig. 5.2.156

NOTE
• *Replace Gasket whenever removed.*

- Position cable holder **(a)** over the GPS.

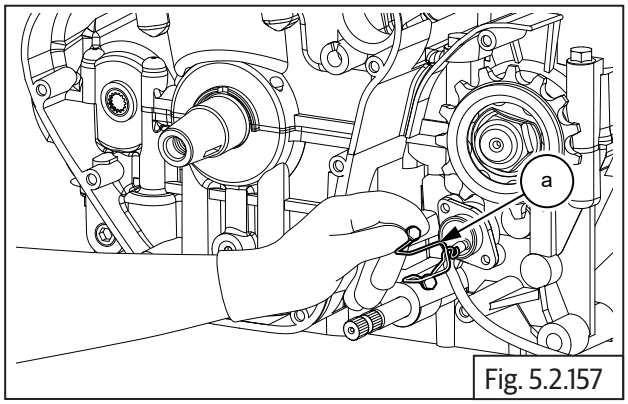

Fig. 5.2.157

- Assemble 2 nos Hex flange head bolts **(M6) (a)** on the cable holder and tighten cable holder and GPS to the crankcase on the LH side to specified torque.

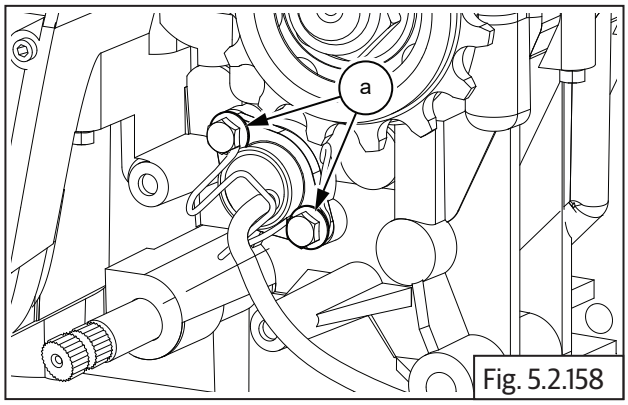

Fig. 5.2.158

	10 mm Socket with Torque wrench
Torque	10-12 N-m/1.0-1.2 kgf-m

5.2.48. Magneto Cover Sub Assembly

Stator coil with CPS in magneto cover

- Position stator coil **(a)** inside magneto cover such that
  - The crank position sensor (CPS) is seated at its mounting location.
  - Magneto wires and grommet **(c)** are aligned to the slot on the top of the cover.
  - The stator mounting holes are aligned to the mounting holes in magneto cover.
- Locate 3 Nos. Hex socket head bolts **(M6) (b)** in the stator coil mounting holes and tighten evenly to specified torque.

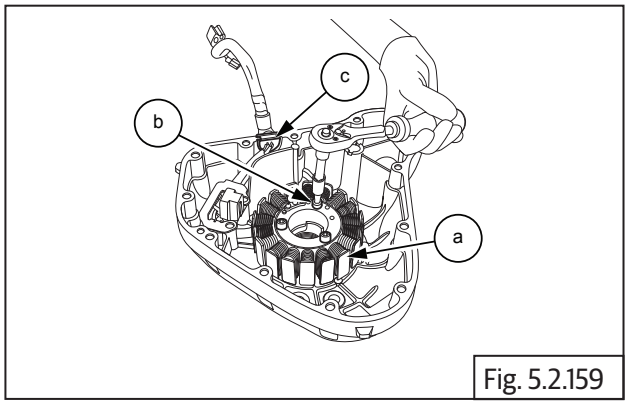

Fig. 5.2.159

	5 mm Allen socket with Ratchet and Torque wrench
Torque	10-12 N-m/1.0-1.2 kgf-m

NOTE
• *Apply Loctite 5910 on the gromet assemby* ***(c)*** *before installation*

- Locate guide plate **(b)** over the CPS **(a)**, ensure the mounting holes of the guide plate, CPS are aligned to the mounting holes in magneto cover.
- Locate 2 Nos. Hex socket head screws **(M5) (c)** on the guide plate and tighten evenly to specified torque.

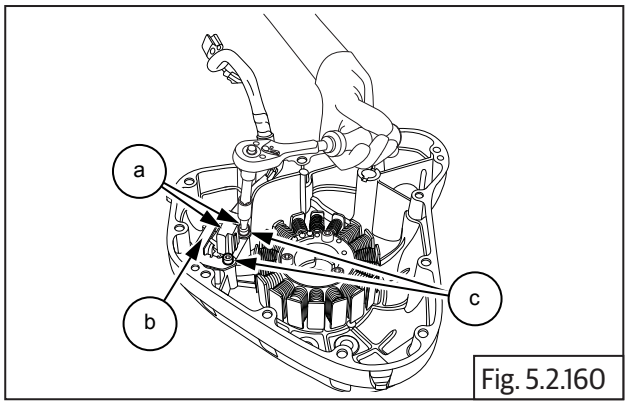

Fig. 5.2.160

	4 mm Allen socket with Ratchet and Torque wrench
Torque	10-12 N-m/1.0-1.2 kgf-m

5.2.49. Magneto Cover on Crankcase

- Locate dowel pins **(a)** into crankcase.

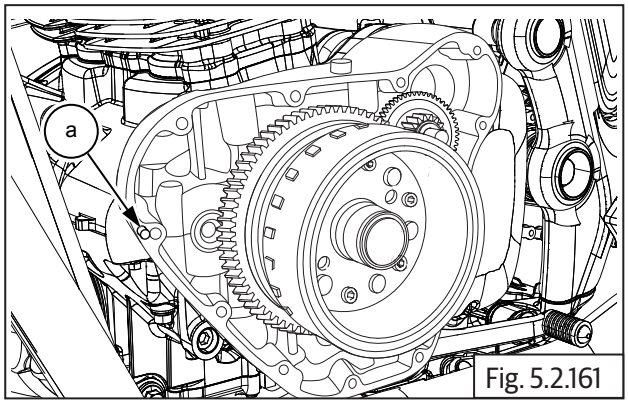

Fig. 5.2.161

- Install Gasket **(b)**.

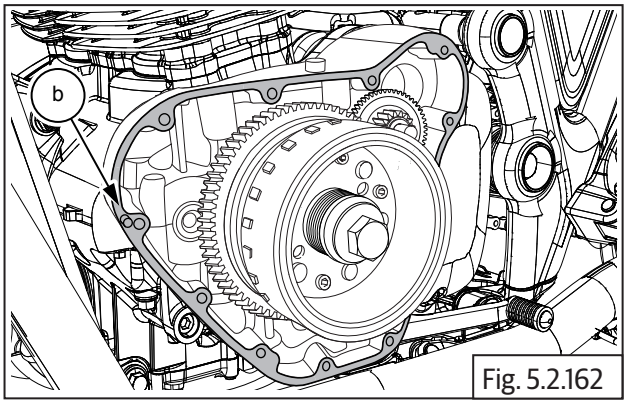

Fig. 5.2.162

NOTE
• *Apply Loctite 5910 in the marked location* **(b)**.

- Locate magneto cover on the crankcase on LH side and ensure it is properly and fully seated.

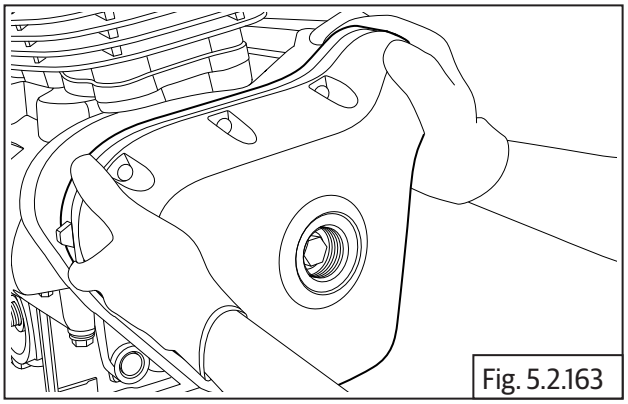
Fig. 5.2.163

⚠ CAUTION
Magnetic forces from the rotor may cause the cover to seat misaligned against crankcase. **Please ensure proper seating of the cover on the crankcase.**

- Locate 12 Nos. Hex socket bolts **(M6)** on magneto cover LH cover and tighten in a crisscross pattern evenly and to specified torque.

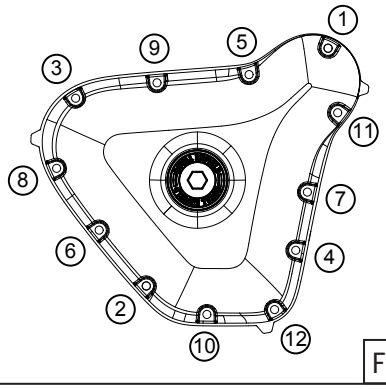

Fig. 5.2.164

- Locate O-ring **(a)** on crankshaft hole plug **(b)**.

NOTE
• *Replace the O ring with a new one whenever removed.* **DO NOT** *reuse.*

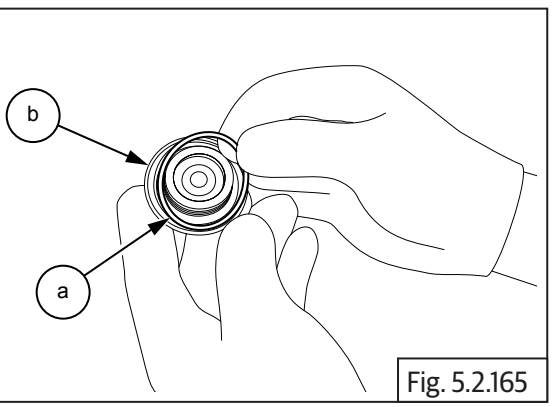

Fig. 5.2.165

- Locate crankshaft hole plug **(M34) (a)** on center of magneto cover and tighten to specified torque.

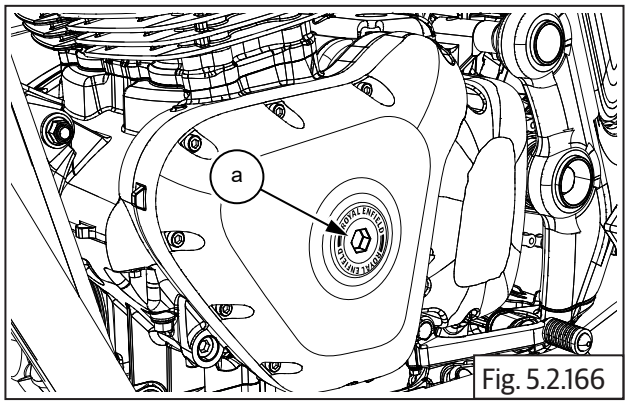

Fig. 5.2.166

	14 mm Allen socket with Ratchet and Torque wrench
Torque	20-22 N-m/2.0-2.2 kgf-m

5.2.50. Magneto / Gear position switch wiring couplers

- Connect the magneto and gear position switch wiring couplers **(a)** to the wiring harness on the rear side of crankcase **(b)**.

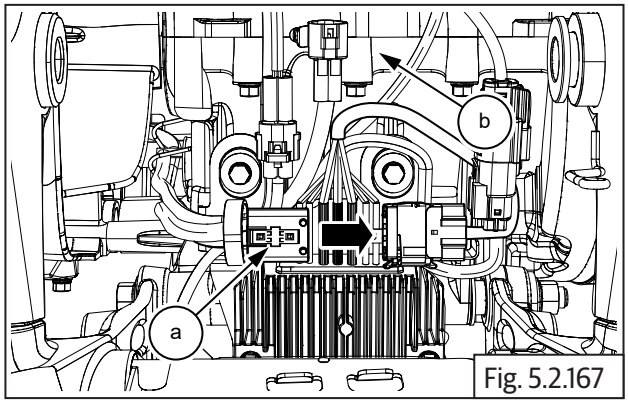

Fig. 5.2.167

5.2.51. FD Sprocket Cover

- Assemble FD sprocket cover **(b)** on crankcase LH.
- Locate 3 Nos. Hex socket head bolts **(M6) (a)** on FD sprocket cover and tighten in a crisscross pattern to specified torque.

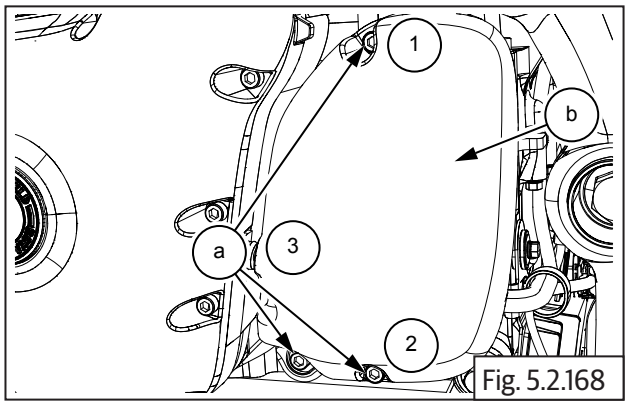

Fig. 5.2.168

	5 mm Allen Socket with Ratchet and Torque wrench
Torque	10-12 N-m/1.0-1.2 kgf-m

5.2.52. Gear Shift Linkage

- Assemble gear shift lever **(a)** on shaft such that the pedal is parallel to LH foot rest.
- Locate flange Hex bolt **(M6) (b)** on gear shift lever and tighten to specified torque.

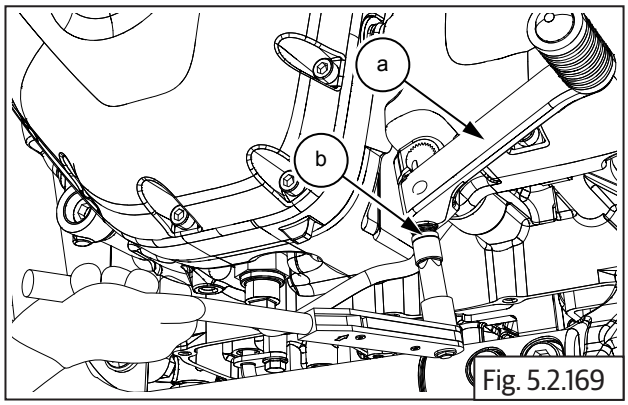

Fig. 5.2.169

	10 mm socket with Torque Wrench
Torque	10-12 N-m/1.0-1.2 kgf-m

5.2.53. Starter Motor

NOTE

- *Do not tap on the starter motor. It may damage the internal parts.*
- *Inspect the starter drive shaft teeth for any wear-out OR damages.*
- *Replace the O Ring when removed. Do not reuse.*
- *Apply Loctite Silicon Lube in O Ring before Installation*
- *Apply Loctite 243 manually on the threads of the starter motor bolts before installation.*

- Locate starter motor **(a)** into the housing **(b)** on upper crankcase LH.

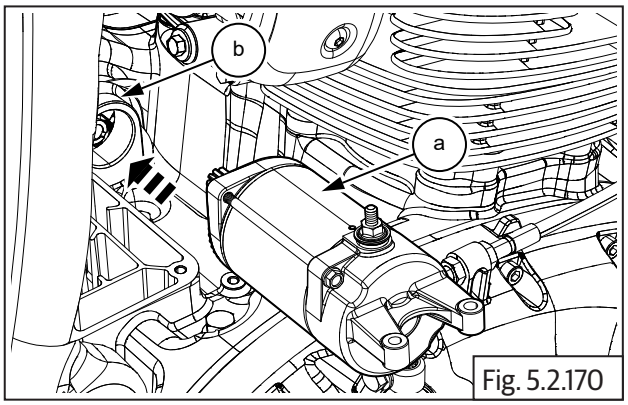

Fig. 5.2.170

- Position negative (-ve) cable **(a)** eyelet over starter motor rear mounting hole and locate 1 No. Hex head flange bolt **(M6) (b) sufficiently.**

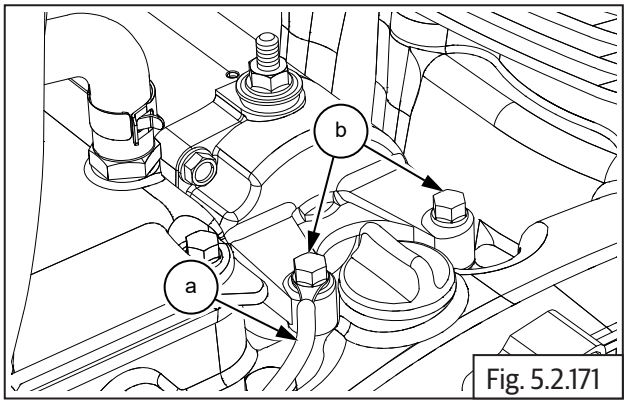

Fig. 5.2.171

- Locate 1 No. Hex head flange bolt **(M5) (a)** on the forward mounting hole on starter motor.
- Tighten both bolts to specified torque.

	8 mm Socket with Ratchet and Torque wrench
Torque	10 N-m/1 kgf-m

5.2.54. Starter Motor Connections

- Connect starter motor positive (+ve) cable **(a)** to starter motor terminal and tighten with Hex nut **(M6) (b)** firmly such that the terminal is not loose. **DO NOT OVERTIGHTEN.**
- Slide protective cap over terminal on starter motor **(c)**.

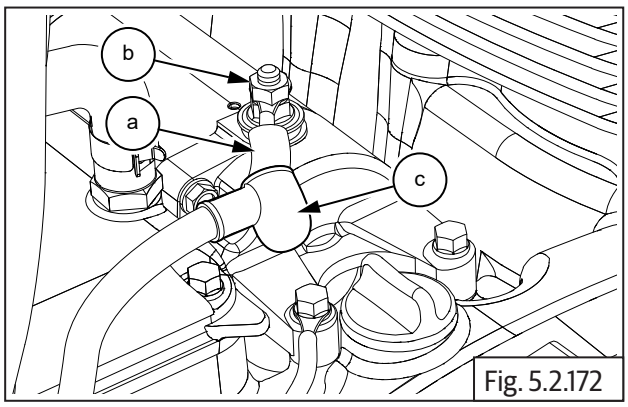

Fig. 5.2.172

	10 mm Double end spanner

5.2.55. Breather Box

- Locate new gasket **(a)** on breather box cover **(b)** and assemble breather box cover on engine.

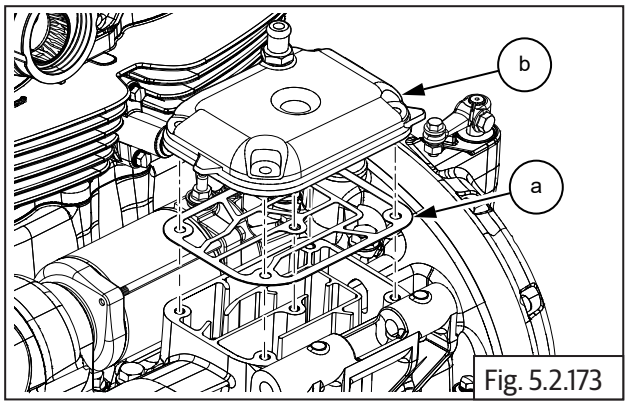

Fig. 5.2.173

- Install and tighten 5 Nos. Hex-head flange bolts **(M6) (a)** to specified torque.

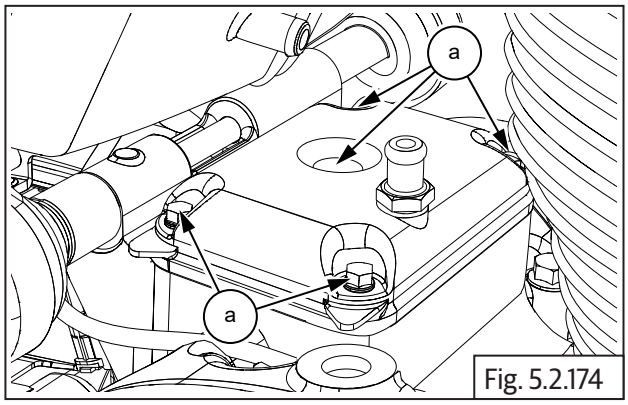

Fig. 5.2.174

	10 mm Socket with Ratchet and Torque wrench
Torque	10-12 N-m/1.0-1.2 kgf-m

5.2.56. Breather Hose Connections

- Insert the shorter end of hose **(b)** on the tube in breather box **(c)**.
- Position the clip **(a)** on hose correctly.

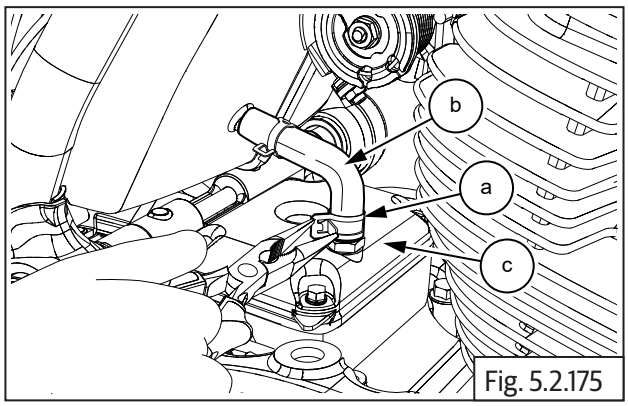

Fig. 5.2.175

	Nose plier

- Locate the other end of hose **(b)** on the tube in air filter box **(c)** and position the clip **(a)** over the breather hose correctly.

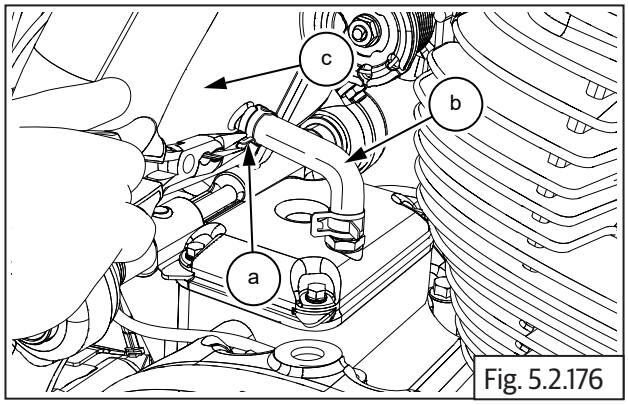

Fig. 5.2.176

	Nose plier

5.2.57. Engine Oil Filling

NOTE
• *Fill engine oil to the recommended level.*

⚠ CAUTION
Do not over fill engine oil has it will lead to oil coming into breather box, possible smoke through exhaust AND/OR oil leaks from joint faces. **Do not under fill engine oil as it will cause excessive heat, increased engine noise, starvation of lubrication AND/OR engine seizure.**

- Fill recommended engine oil till the level is between the "Max and Min" marks on the oil level window on clutch cover.

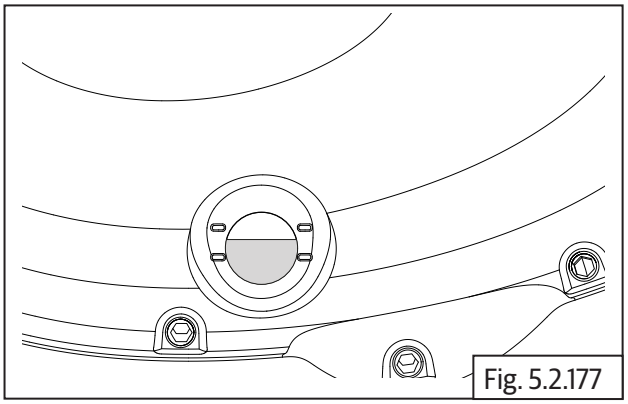
Fig. 5.2.177

Dry Fill	3.9 Liters / 1.03 Imperial gallon
Grade	"10W-50 TO API SL (OR HIGHER) JASO MA2, SUCH AS ELF MOTO4 TECH 10W 50 (FULLY SYNTHETIC)"

- Assemble oil filler cap **(a)** on the filler hole on the crankcase top on RH side and tighten just sufficiently.
- Use an adjustable plier with soft jaws. **DO NOT OVERTIGHTEN.**

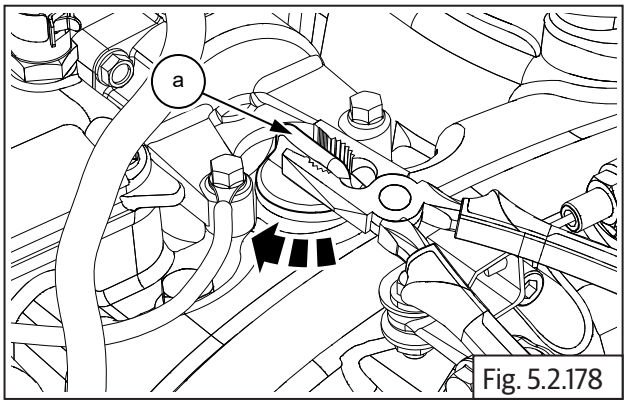

Fig. 5.2.178

	Adjustable plier with Soft jaws

ENGINE REMOVAL FROM FRAME

CONTENTS **PAGE**

Components Dismantling Sequence To Remove Engine From Frame - Flow Chart.....130

5.3 Engine Removal from Main Frame 136

5.3.1Engine Oil.....136

5.3.2Oil Cooler Inlet and Outlet Pipes.....136

5.3.3 Oil Cooler Mountings on Frame.....137

5.3.4 Oil Filter.....138

5.3.5 Side Panel RH.....138

5.3.6 Seat Assembly.....138

5.3.7 Side Panel LH.....139

5.3.8 Battery Connections.....139

5.3.9 Clutch Cable.....139

5.3.10 Fuel Pump Connector and Fuel Level Sensor.....141

5.3.11 Fuel Hose (Fuel Pump to Injector).....141

5.3.12 EVAP Connections on Fuel Tank.....141

5.3.13 Drain Hose.....141

5.3.14 Throttle Body Covers on LH and RH.....142

5.3.15 Throttle Cable.....142

5.3.16 Injector, TPS, MAPS, ISC Connections.....142

5.3.17 Air Filter Housing to Throttle Body.....143

5.3.18 Throttle Body.....143

5.3.19 Engine Steady Bracket.....144

5.3.20 Engine Cylinder Head Steady Bracket.....144

5.3.21 Hego/Oxygen Sensor Connectors.....144

5.3.22 Silencer.....145

5.3.23 CAT Box.....146

CONTENTS **PAGE**

5.3.24 Exhaust Pipe 147

5.3.25 Magneto/Gear Position/Side Stand 148

5.3.26 Starter Motor Connection..... 149

5.3.27 Spark Plug Suppressor Caps on LH 150

5.3.28 Breather Hose Connection 150

5.3.29 Gear Shift Linkage..... 151

5.3.30 FD Sprocket Cover..... 151

5.3.31 Rear Wheel (Increasing chain slack) 152

5.3.32 Remove Rear Chain from FD Sprocket.....152

5.3.33 Gear Position Indicator Sensor.....152

5.3.34 Cradle Frame Top Mountings.....153

5.3.35 Cradle Frame Bottom Mountings.....153

5.3.36 Rear Top Engine Mountings.....154

5.3.37 Engine from Main Frame 156

5.3.38 Mounting Studs of Engine to Cradle Frame 156

Components Dismantling Sequence To Remove Engine From Frame - Flow Chart

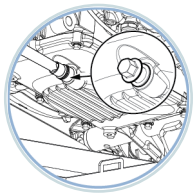

Drain engine oil

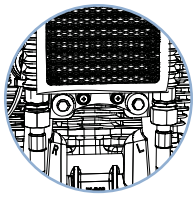

Oil cooler inlet and outlet pipes from engine

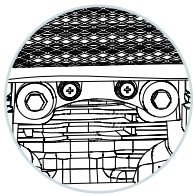

Oil cooler mountings from frame

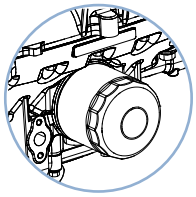

Oil filter

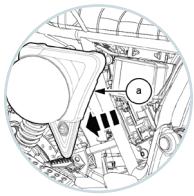

Side panel RH

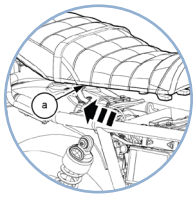

Seat assembly

C

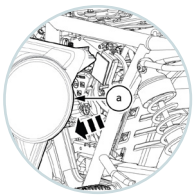

Seat panel LH

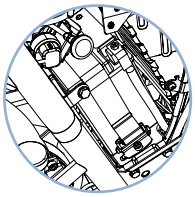

Battery connections

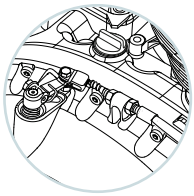

Clutch cable

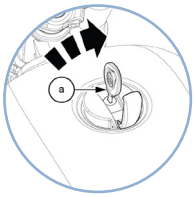

Fuel tank

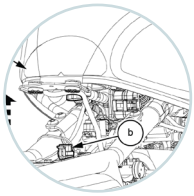

Fuel pump coupler and fuel level sensor coupler

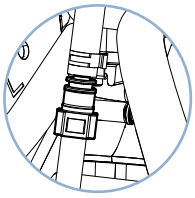

Fuel hose

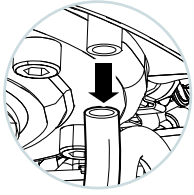

EVAP connection to tank

C

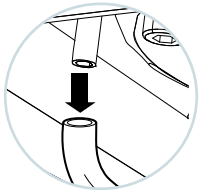

Drain hose

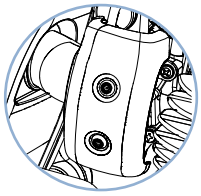

Throttle body covers LH and RH

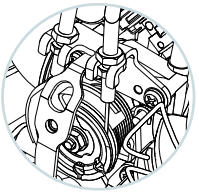

Throttle cable

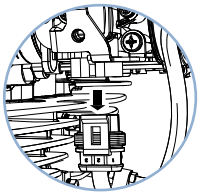

Throttle position sensor and injector coupler RH and LH

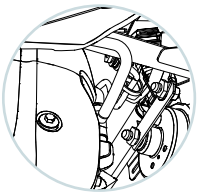

Reed valve connection

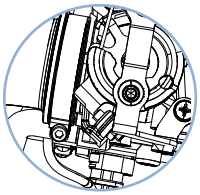

Air filter housing to throttle body connection

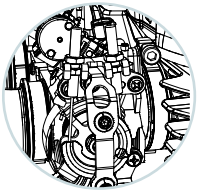

Throttle body

C

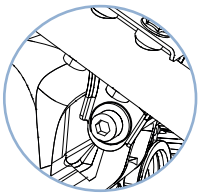

Engine steady bracket



Hego/Oxygen sensor connector

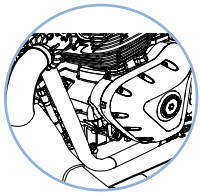

Exhaust pipe and silencer LH and RH

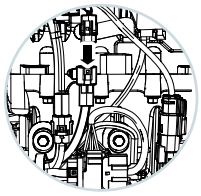

Magneto/Gear position/Side stand switch couplers connections

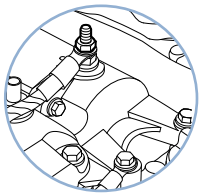

Starter motor connection

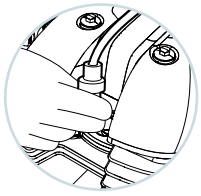

Spark plug suppressor caps on LH

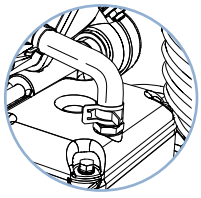

Breather hose connection from breather box to air filter box

C

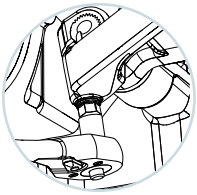

Gear shift linkage

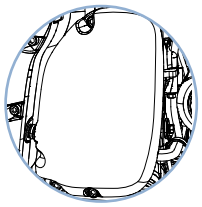

FD sprocket cover

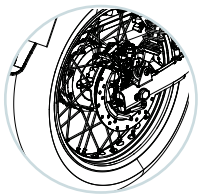

Rear wheel



Remove rear wheel chain from FD sprocket



Gear position sensor

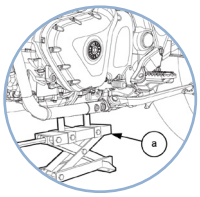

Cradle frame top mountings from main frame

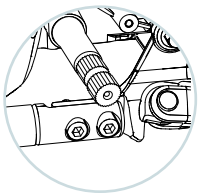

Cradle frame bottom mountings from main frame

C

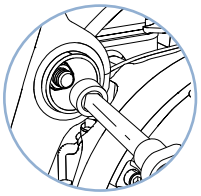

Rear top engine mounting from main frame



Lower bottom support

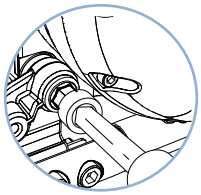

Engine along with cradle frame from main frame

5.3 Engine Removal from Main Frame

⚠ WARNING

The engine and exhaust system get extremely hot during normal operation and direct contact with skin can cause serious burns. Make sure engine is in normal temperature (OR) cooled before starting operation.

5.3.1. Engine Oil

NOTE

- *Ensure the motorcycle is placed on a firm flat surface, resting it on the center stand/ramp.*

- Before starting the dismantling process, start the engine and let the engine warm up for a few minutes and then turn it OFF.
- Remove engine oil filler cap **(a)**.

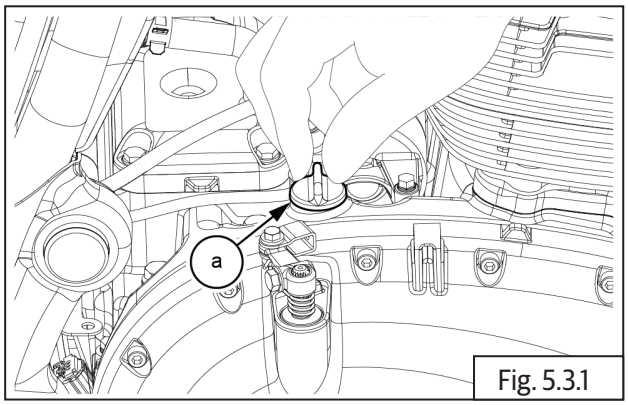

Fig. 5.3.1

- Place a tray **(a)** under engine oil magnetic drain plug **(b)**. Remove it along with washer **(c)** to drain oil completely from engine.

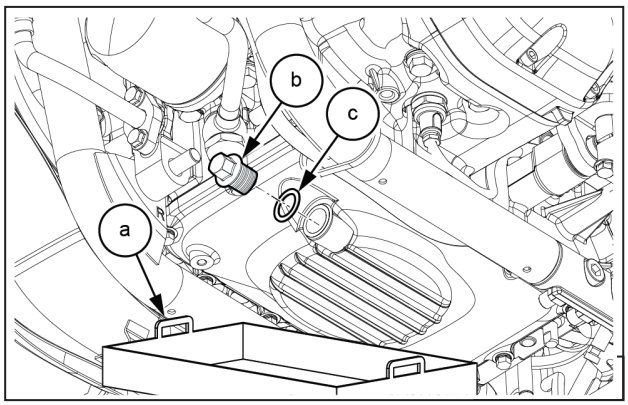

	13 mm Socket with Ratchet

5.3.2. Oil Cooler Inlet and Outlet Pipes

Oil cooler inlet and outlet pipes from engine

NOTE

- *Ensure the oil is fully drained and keep a container underneath the engine to avoid oil spilling on floor.*

- Support the top adapter **(M16) (a)** suitably and loosen the bottom Hex nut **(M18) (b)** located on oil cooler hose **(c)**.

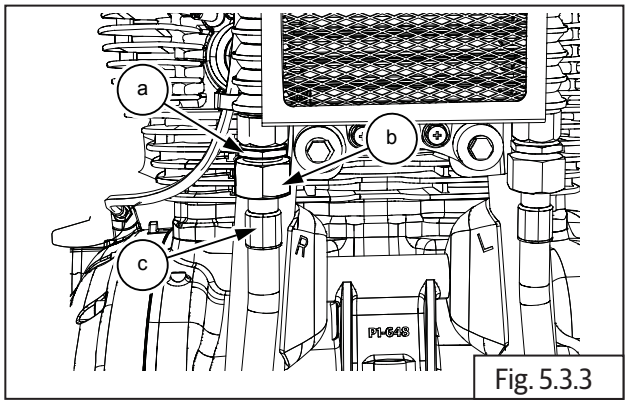

Fig. 5.3.3

	24 mm and 27 mm Double end spanner

- Loosen and remove 2 Nos. Hex socket screws **(M6) (a)** to disconnect oil cooler inlet pipe from engine.

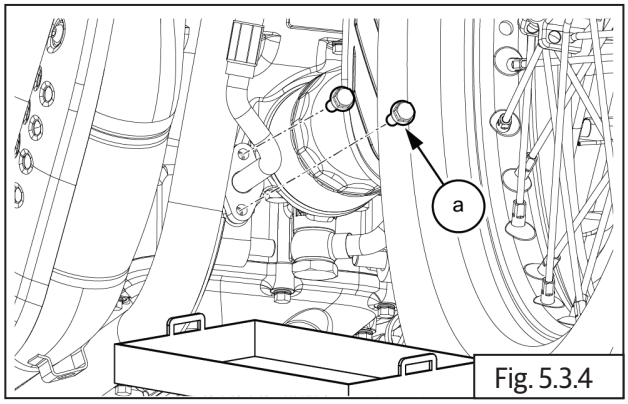

Fig. 5.3.4

	5 mm Allen Socket with Ratchet

- Loosen and remove bolt **(b)** along with washer union crankcase **(M16) (a)** located below front bottom of engine.

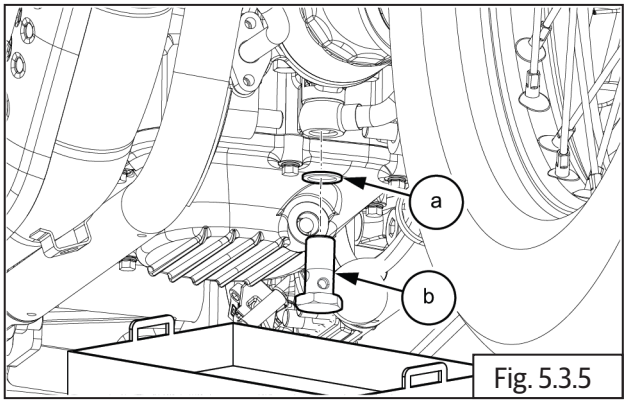

Fig. 5.3.5

	24 mm Socket with Ratchet

- Disconnect 2 Nos. inlet pipe lines one by one.

NOTE
• *Cover the pipe ends and cooler ends suitably to avoid dust entry.*

5.3.3. Oil Cooler Mountings on Frame

- Loosen and remove 2 Nos. Hex flange head bolts **(M6) (a)** along with washer **(b)** and rubber **(c)** from oil cooler.

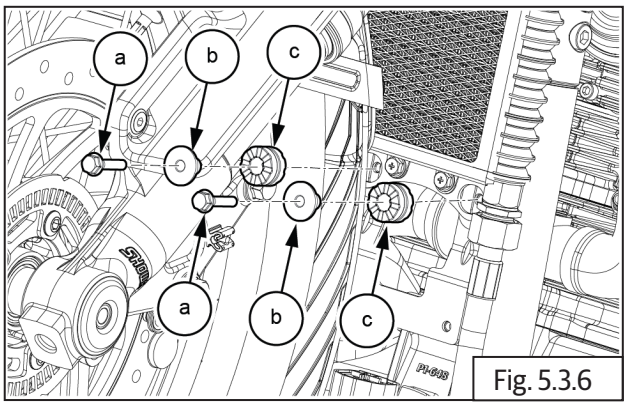

Fig. 5.3.6

	10 mm Socket with Ratchet

- Remove top bolt
- Loosen and remove 2Nos bolt **(a)** from oil cooler frame.

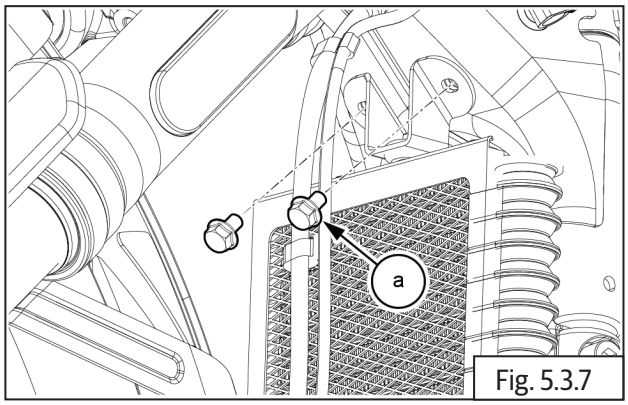

Fig. 5.3.7

	10 mm Socket with Ratchet

NOTE
• *Ensure to cover the cooler pipe ends suitably to avoid exposure to dust.*

⚠ CAUTION
Do not damage cooler fins. Carefully handle the cooler and place it in a safe location.

5.3.4. Oil Filter

- Place a tray under engine oil filter **(a)**.
- Loosen and remove using special tool **(b)** from the front bottom of engine **(c)**.

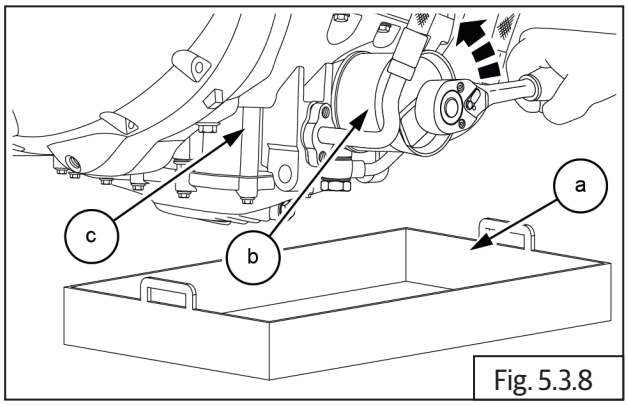

Fig. 5.3.8

SPL	Part No: ST30294/A
	Part Name: Oil Filter wrench with Ratchet

5.3.5. Side Panel RH

- Insert ignition key **(a)** and turn clockwise to unlock and remove RH side panel from motorcycle.

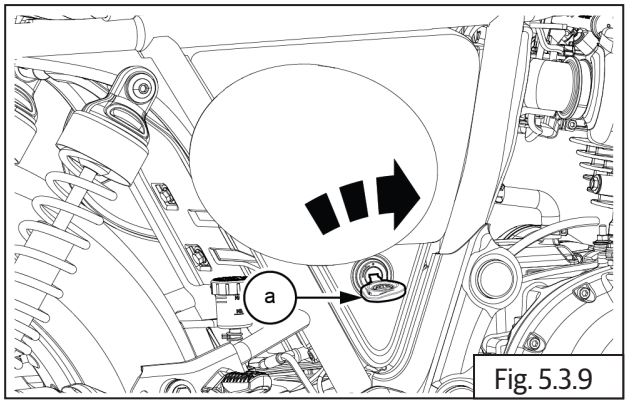

Fig. 5.3.9

5.3.6. Seat Assembly

- Locate seat lock **(a)** on RH side of motorcycle near to the RH panel.
- Pull/Release seat lock **(a)** to remove seat from motorcycle.

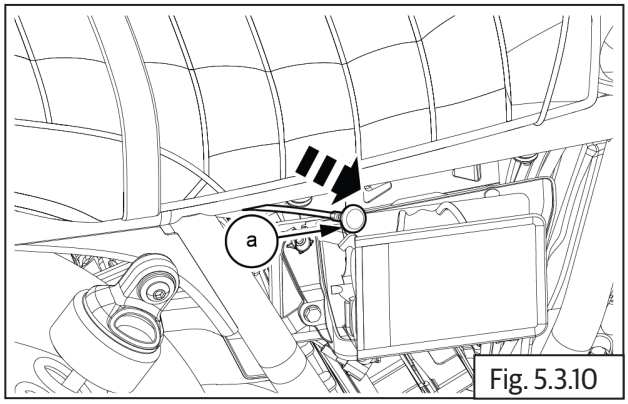

Fig. 5.3.10

- Gently lift and pull seat **(a)** from rear side of motorcycle and place it in a safe location to prevent from scratches and dirt.

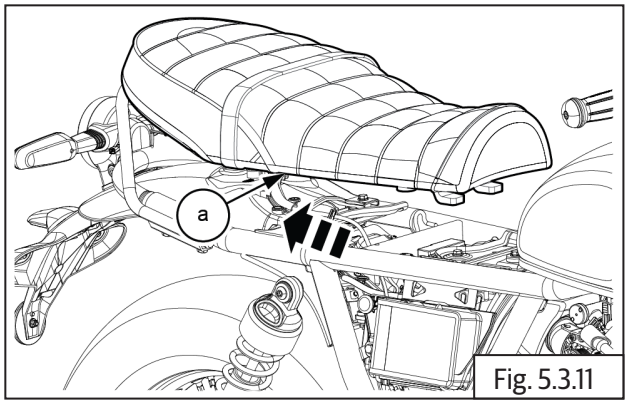

Fig. 5.3.11

5.3.7. Side Panel LH

- Loosen and remove head screw **(a)** and washer **(b)** from LH side panel.

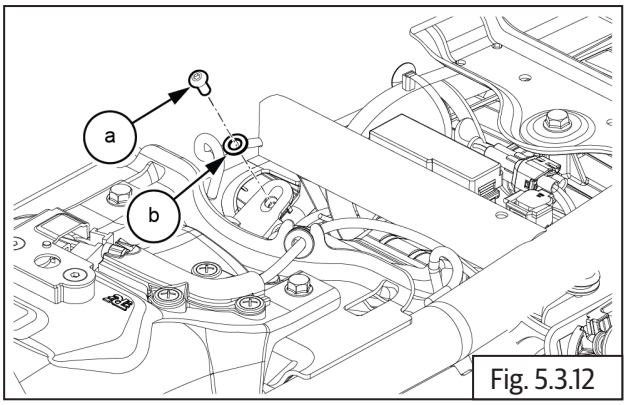

Fig. 5.3.12

	4mm Allen Socket with Ratchet

- Gently slide and remove LH panel **(a)** from motorcycle.

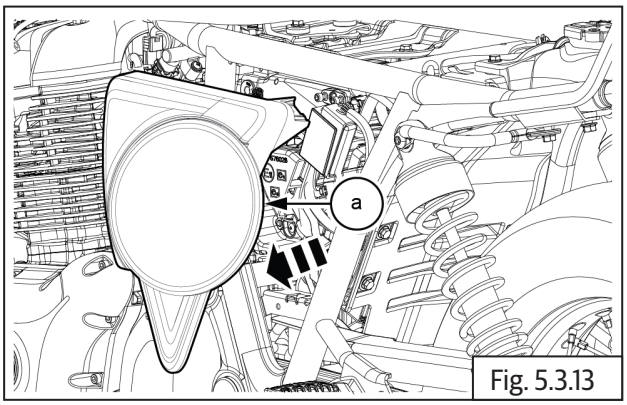

Fig. 5.3.13

5.3.8. Battery Connections

NOTE
• *Ensure ignition and stop switches are in OFF position before disconnecting battery cables.*

- Loosen and remove Hex head bolt **(M6) (a)** to disconnect negative (-) terminal from battery **(b)**.

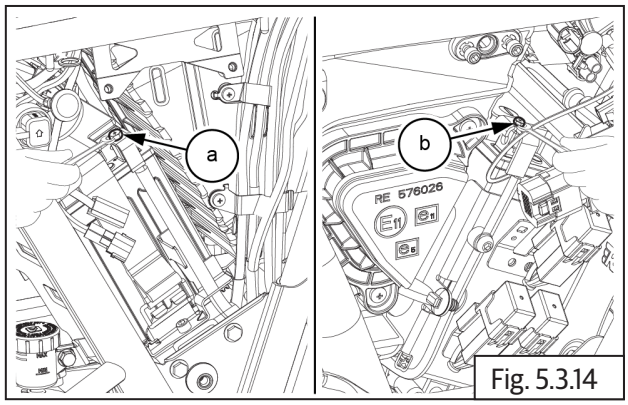

Fig. 5.3.14

	10mm Combination Spanner

5.3.9. Clutch Cable

- Loosen outer lock nut **(M8) (a)** from rear of cable adjuster.

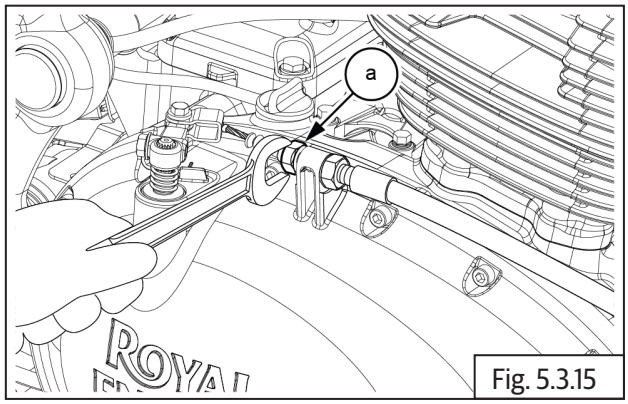

Fig. 5.3.15

- Loosen inner locknut **(M8) (a)** fully and pull adjuster from housing cable guide **(b)**.

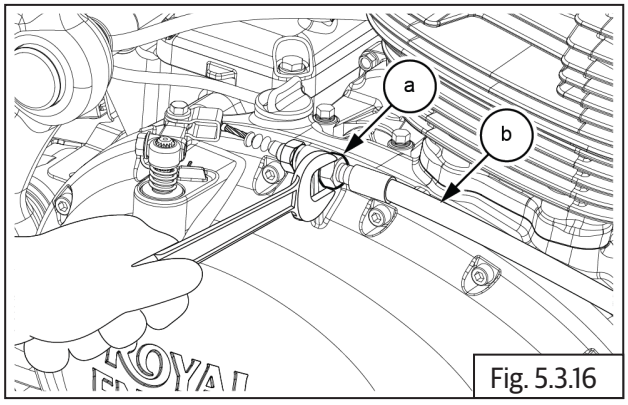

Fig. 5.3.16

	12 mm Combination Spanner

- Release inner cable **(a)** from clevis on clutch actuating assembly **(b)** and push rod **(c)**.

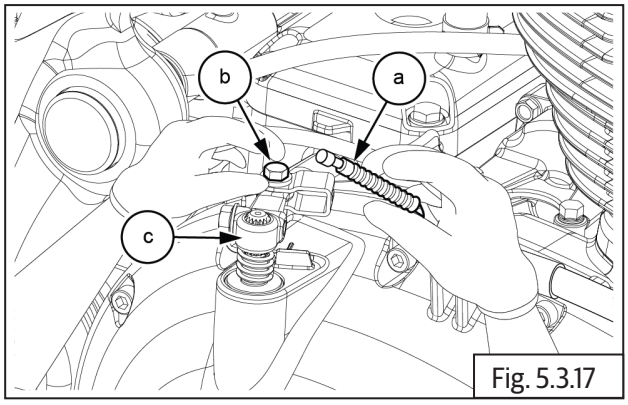

Fig. 5.3.17

- Remove rubber grommet **(a)** from inner clutch cable **(b)**.

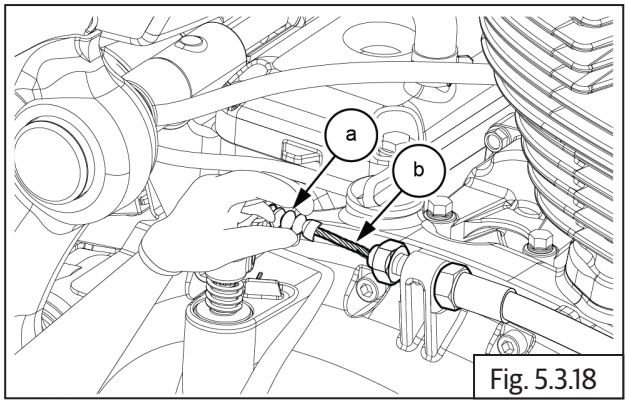

Fig. 5.3.18

- Remove outer lock nut **(a)** from inner clutch cable.

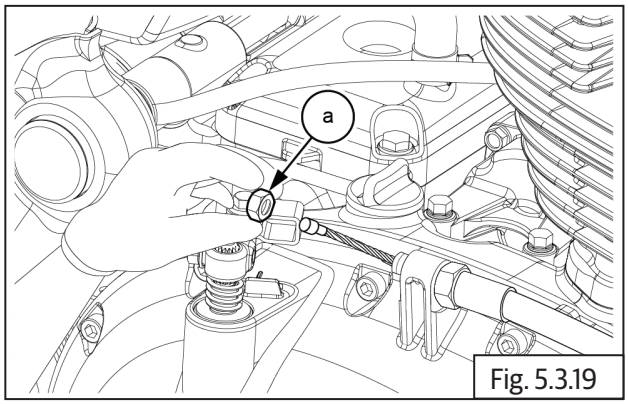

Fig. 5.3.19

- Remove clutch cable **(a)** from cable guide **(b)**.

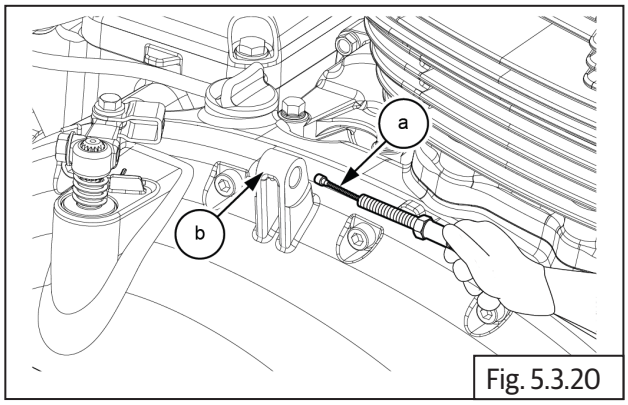

Fig. 5.3.20

- Loosen and remove 2 Nos. Hex head bolts **(M6) (a)** from rear end of fuel tank.

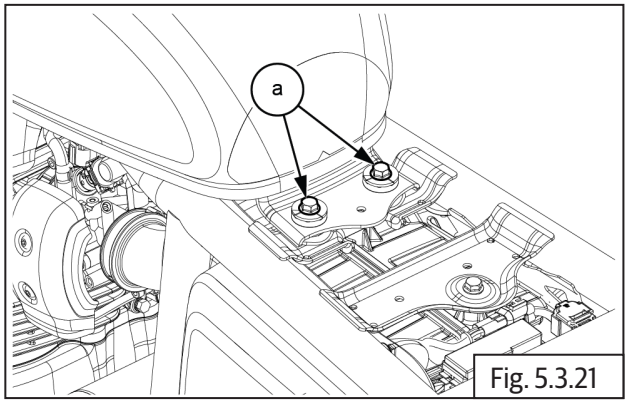

Fig. 5.3.21

	10 mm Socket with Ratchet

5.3.10. Fuel Pump Connector and Fuel Level Sensor

- Gently lift the fuel tank upwards to access the fuel pump connector.
- Disconnect the fuel pump connector **(a)** from fuel tank **(b)**.

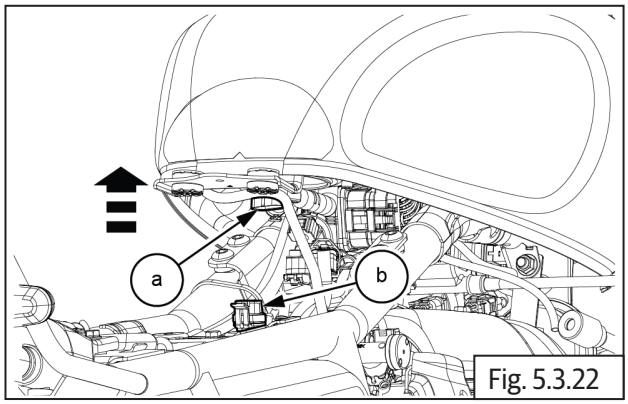

Fig. 5.3.22

- Disconnect fuel level sensor connector **(a)** from fuel tank.

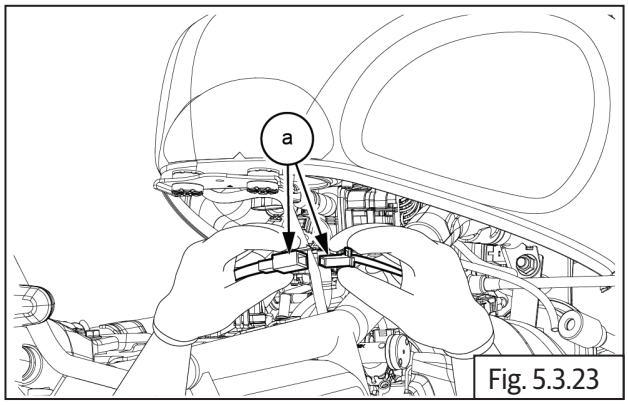

Fig. 5.3.23

5.3.11. Fuel Hose (Fuel Pump to Injector)

- Locate the fuel feed hose connector (fuel pump to injector rail) **(a)** under the fuel tank.

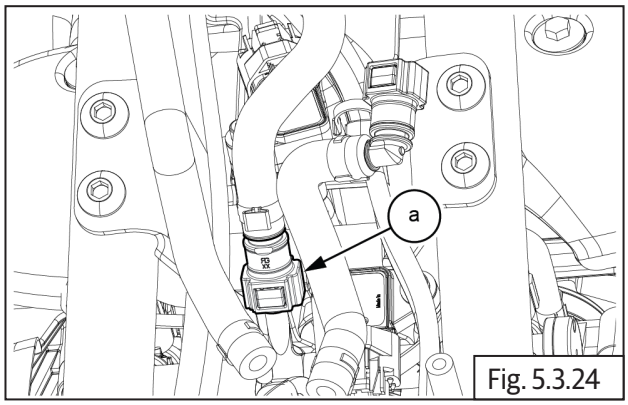

Fig. 5.3.24

- Disconnect quick joint connector **(a)** from pipe by pressing the lock button.

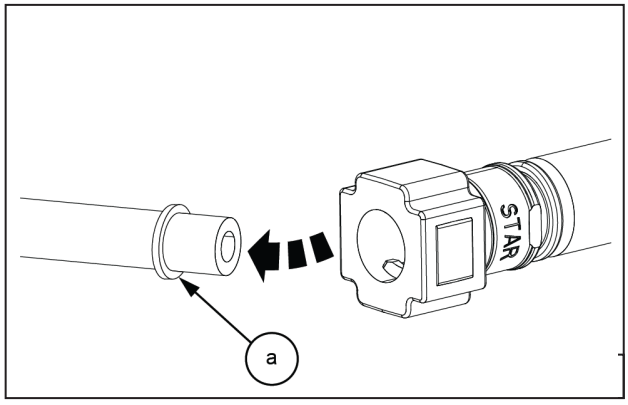

⚠ WARNING

Fuel pressure may be present still in the fuel line; crank engine to release pressure in the fuel line.

5.3.12. EVAP Connections on Fuel Tank

- Disconnect EVAP connection hose **(a)** from fuel tank **(b)**.

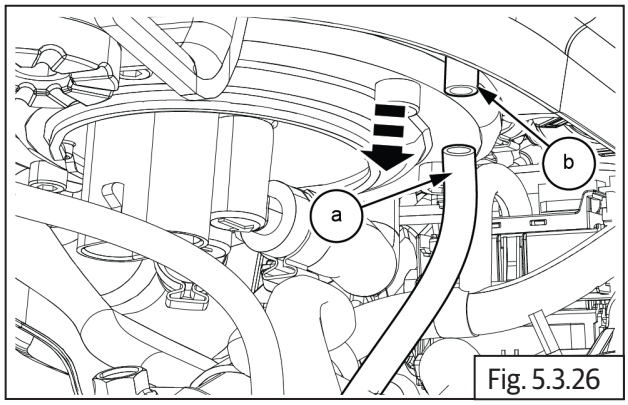

Fig. 5.3.26

5.3.13. Drain Hose

- Disconnect drain hose connection **(a)** from fuel tank **(b)**.

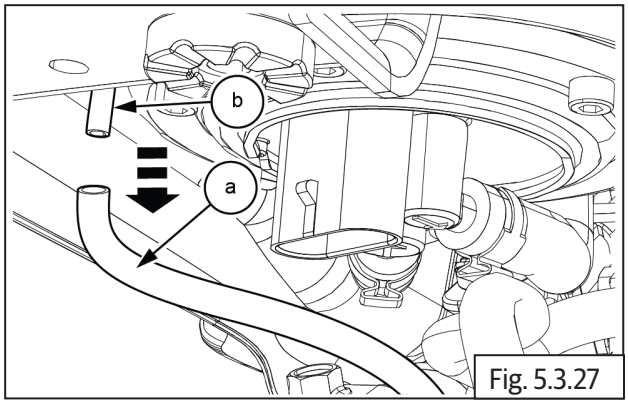

Fig. 5.3.27

5.3.14. Throttle Body Covers on LH and RH

- Loosen and remove 2 Nos. Hex socket bolts **(M5) (a)** from RH and LH throttle body cover **(b)**.

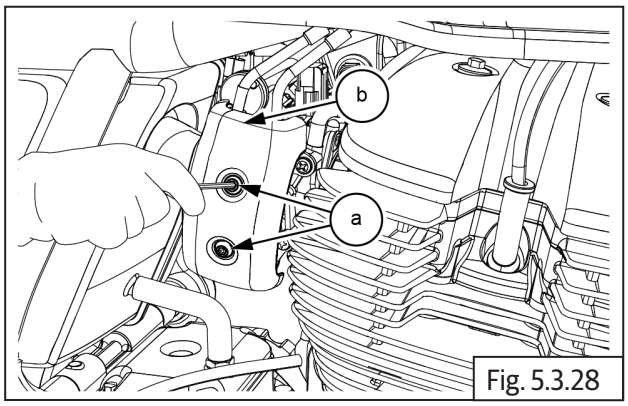

Fig. 5.3.28

	4 mm Allen Socket with Ratchet

5.3.15. Throttle Cable

(Connection on Throttle Body)

- Loosen 2 Nos. Hex head nuts **(M6) (a)** on RH throttle body **(b)** to release the tension in throttle cable.

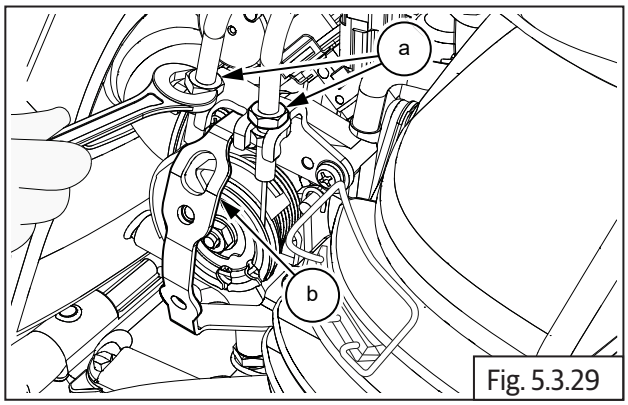

Fig. 5.3.29

	12 mm Combination Spanner

- Gently pull throttle cable **(a)** out from bracket to release the adjuster and lock nuts **(b)** from throttle body.
- Repeat the procedure to release the other throttle cable.

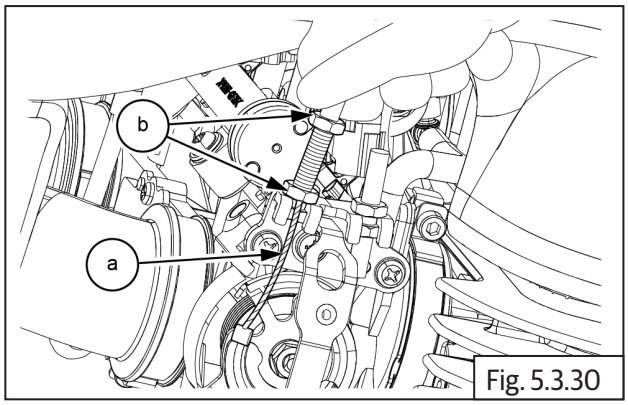

Fig. 5.3.30

5.3.16. Injector, TPS, MAPS, ISC Connections

Throttle Position Sensor (TPS), Manifold Absolute Pressure (MAP) Sensor and Idle Speed Controller (ISC)

- Disconnect throttle position sensor connector **(a)** from LH throttle body.

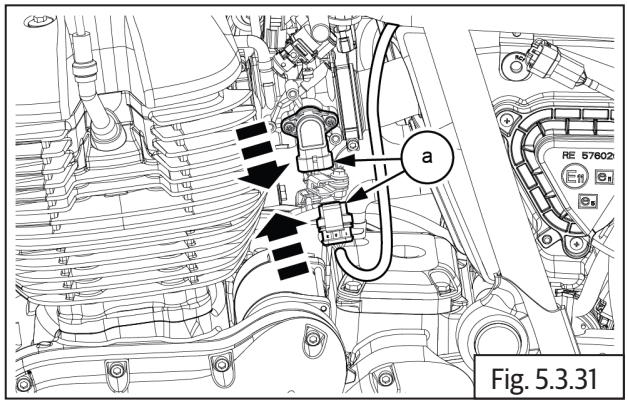

Fig. 5.3.31

- Gently press connector lock to disconnect fuel injector connectors **(a)** from LH and RH of throttle body **(b)**.

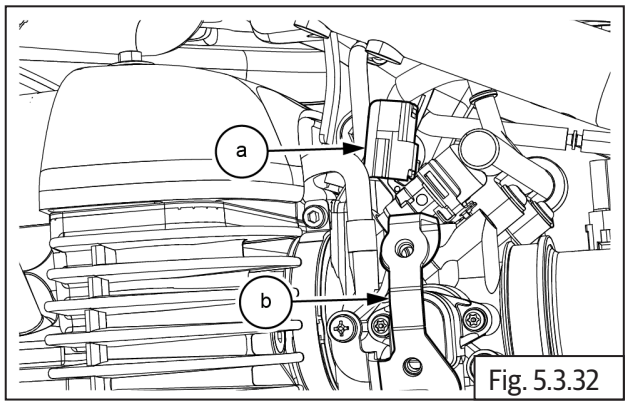

Fig. 5.3.32

- Disconnect idle speed control sensor connector **(a)** from throttle body.

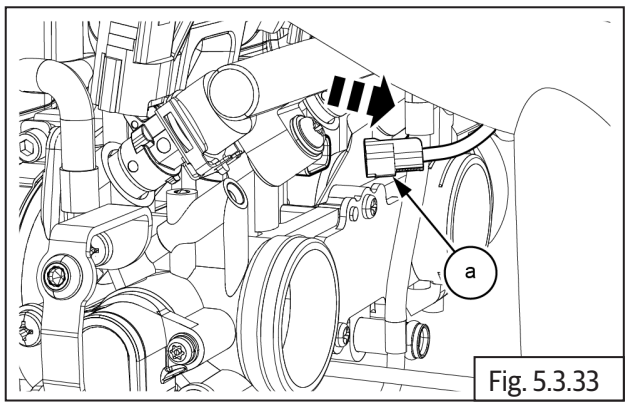

Fig. 5.3.33

5.3.17. Air Filter Housing to Throttle Body

- Locate LH and RH worm clips on throttle body to air filter box.
- Loosen both LH and RH worm clip screws **(M5) (a)** and separate the air filter housing from throttle body.

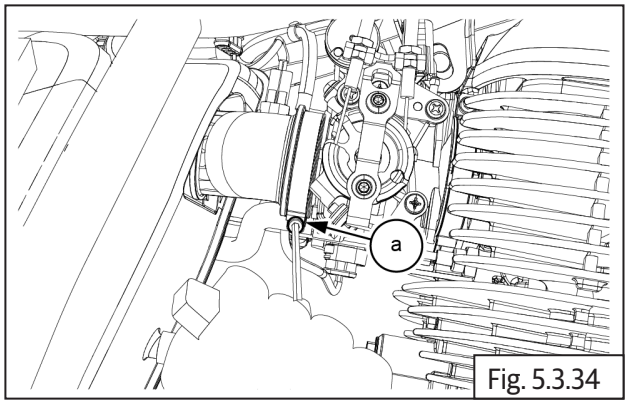

Fig. 5.3.34

	8 mm Allen Socket with Ratchet

5.3.18. Throttle Body

- Ensure throttle position sensor, manifold absolute pressure sensor and idle speed controller wiring connectors are disconnected.
- Disconnect the hoses from canister purge valve.
- Loosen worm clip screws **(M5) (a)** to disconnect throttle body from inlet manifolds.

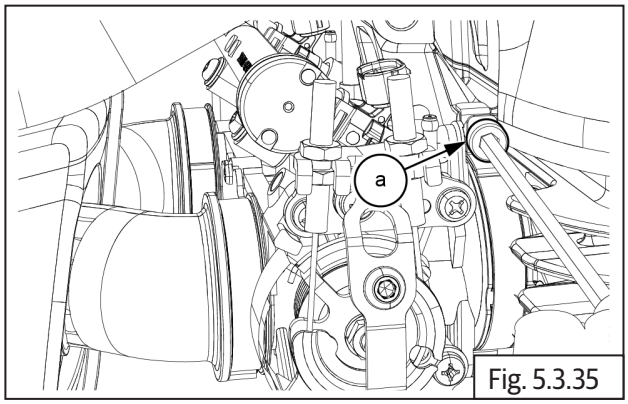

Fig. 5.3.35

	4 mm Allen Socket with Ratchet

5.3.19. Engine Steady Bracket

- Remove mounting clamp **(a)** from the hose **(b)**.

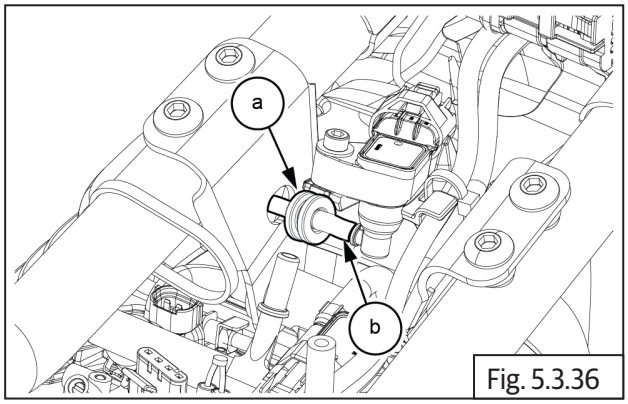

Fig. 5.3.36

- Support the bottom of engine suitably.
- Loosen and remove Hex socket head bolt **(M8) (a)** on LH side and hold hex nut on RH.

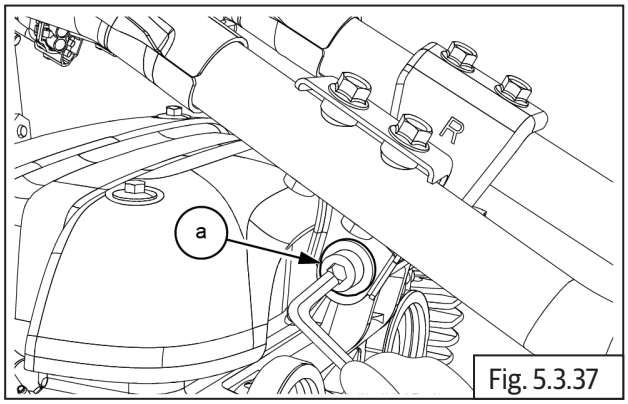

Fig. 5.3.37

	6 mm Allen Socket with Ratchet

- Loosen and remove Hex nut **(M8) (a)** and washer from RH side.

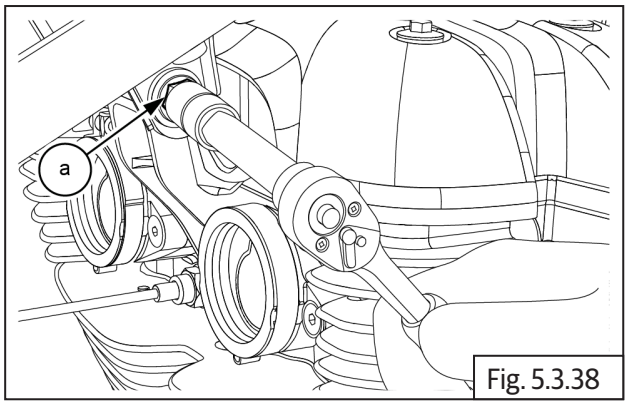

Fig. 5.3.38

	12 mm Socket with Ratchet

5.3.20. Engine Cylinder Head Steady Bracket

- Loosen and remove 4 Nos. Hex flange head bolts **(M8) (a)** from LH and RH steady brackets located on center of main frame.

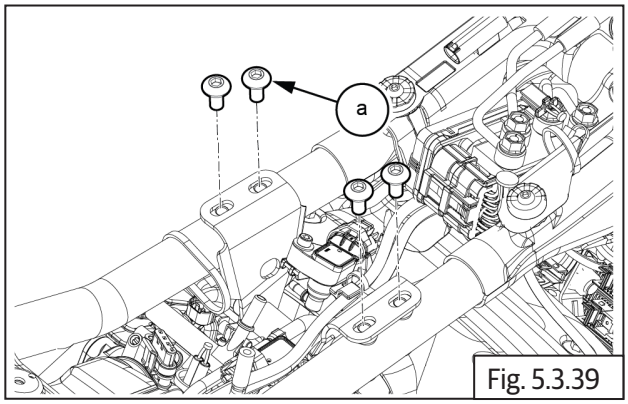

Fig. 5.3.39

	12 mm Socket with Ratchet

- Remove the LH and RH steady brackets **(a)** from frame **(b)**.

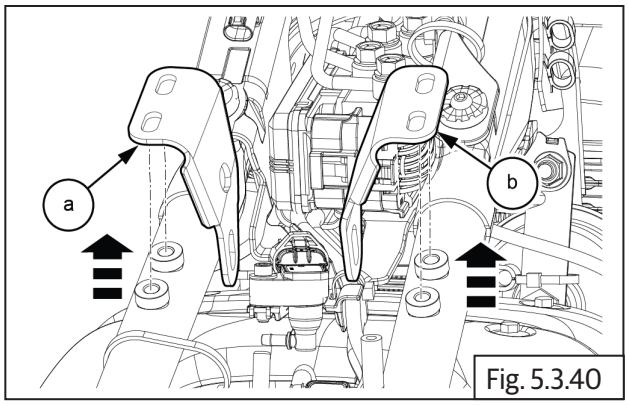

Fig. 5.3.40

5.3.21. Hego/Oxygen Sensor Connectors

- Disconnect Hego/oxygen sensor connectors **(a)** from both LH and RH located on front side of engine.

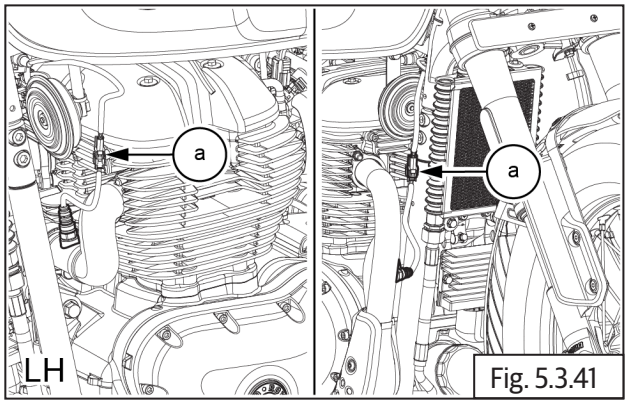

Fig. 5.3.41

5.3.22. Silencer

- Loosen and remove **2 Nos** button head bolts **(M6) (a)** from rear Silencer guard.

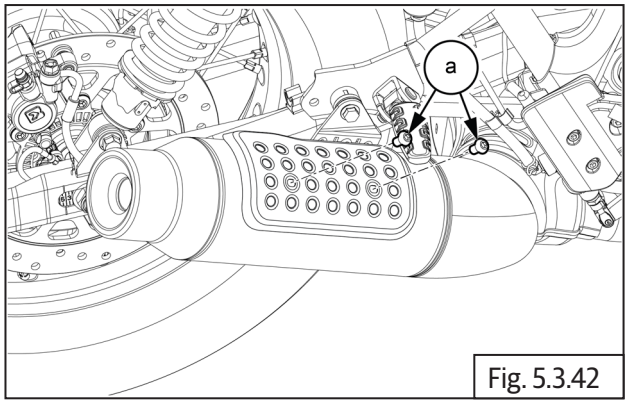

Fig. 5.3.42

	4 mm Allen Socket with Ratchet

- Remove Silencer guard **(a)** from silencer.

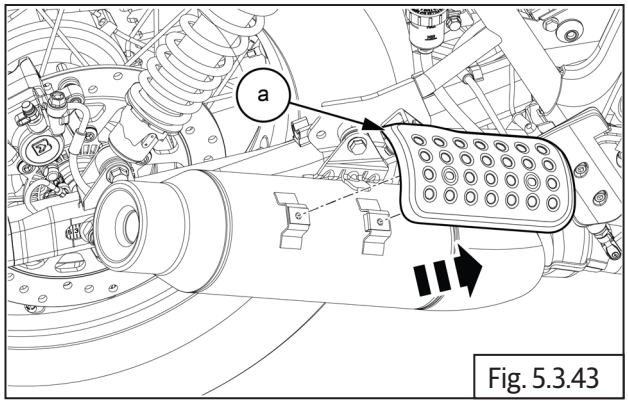

Fig. 5.3.43

- Detach the **2Nos** clip nuts **(a)** from silencer.

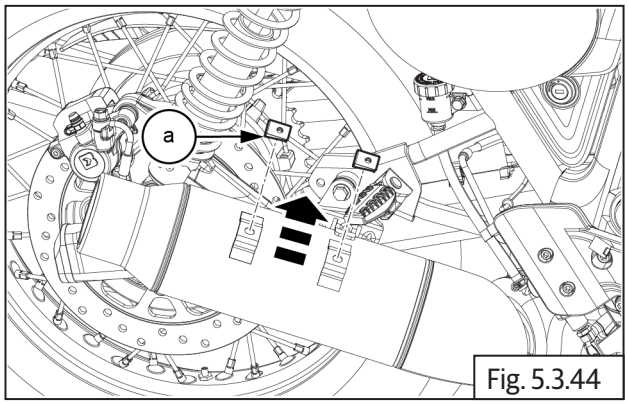

Fig. 5.3.44

- Loosen the hex flange bolt **(M8) (a)** from mounting clamp.

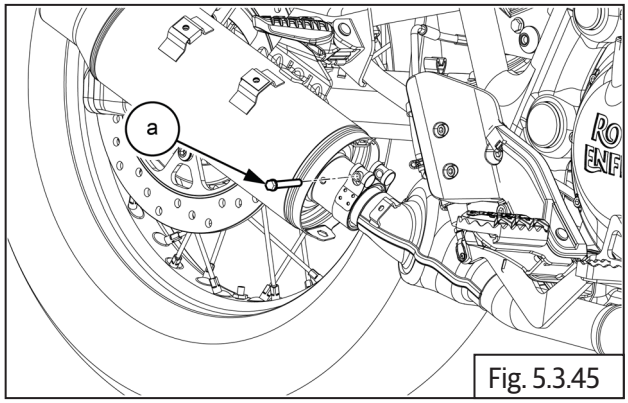

Fig. 5.3.45

	12 mm socket with ratchet

- Loosen and remove the flanged hex domed cap bolt **(M8) (a)** and flange U nut **(M8) (d)** along with **2 Nos** pin **(b)** and **2 Nos** damper **(c)** from silencer.

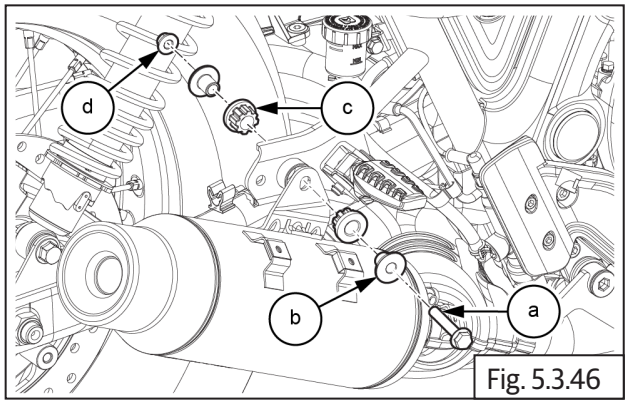

Fig. 5.3.46

	12 mm socket with ratchet

- Gently tap and pull the silencer **(a)** outwards to remove.

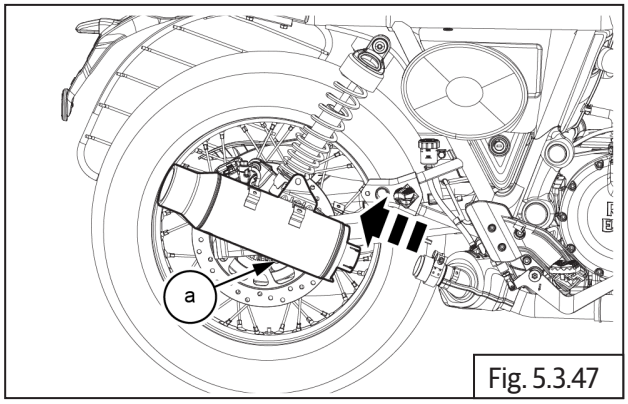

Fig. 5.3.47

	Mallet

- Remove the gasket **(a)** from Silencer and Discard it.

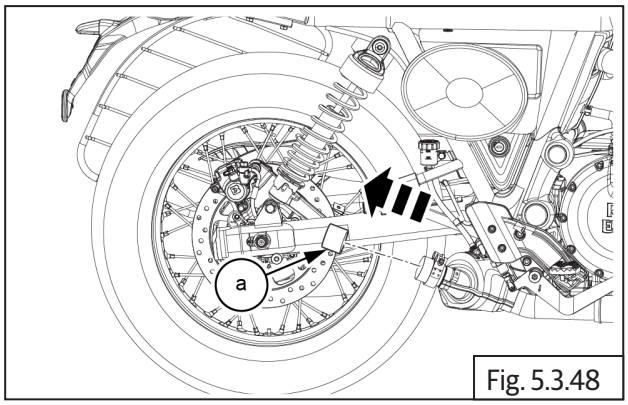

Fig. 5.3.48

5.3.23. CAT Box

- Loosen hex flange bolt **(M8) (a)** from mounting clamp.

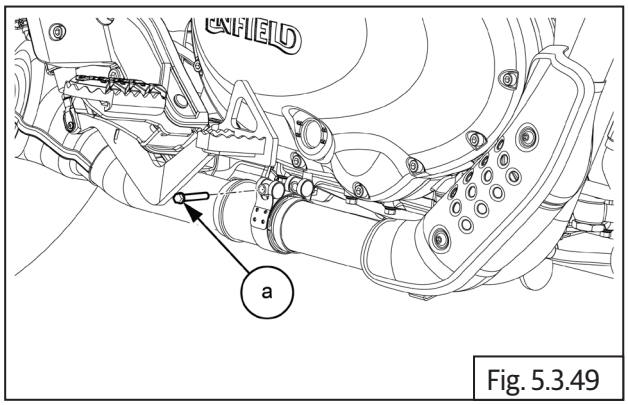

Fig. 5.3.49

	12 mm Socket with Ratchet

- Remove the **2 Nos** cap flange bolts **(M8) (a)** from the RH control plate to access the CAT box mounting bolts.

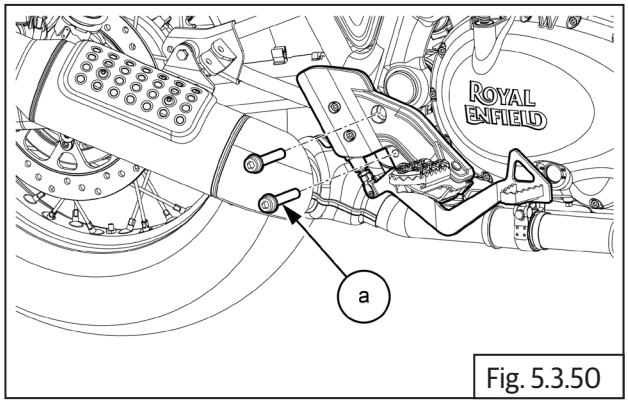

Fig. 5.3.50

	6 mm Allen Socket with Ratchet

- Loosen and remove the mounting flanged hex domed cap bolt **(M8) (a)** along with **2 Nos** pins **(b)** and washers **(c)** from RHS cat box.

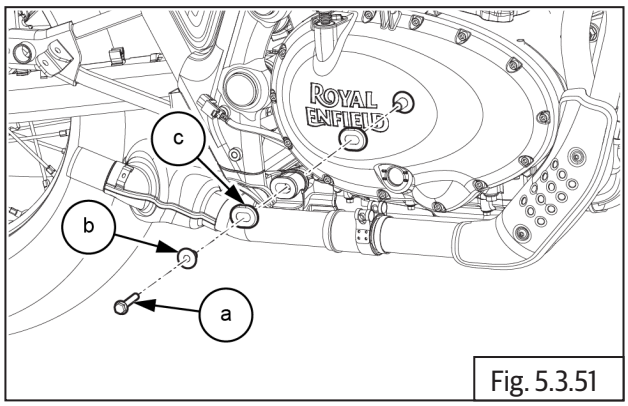

Fig. 5.3.51

	12 mm Socket with Ratchet

- Loosen and remove the mounting flanged hex bolt **(M8) (a)** along with **2 Nos** pins **(b)** and damper **(c)** from LHS CAT box.

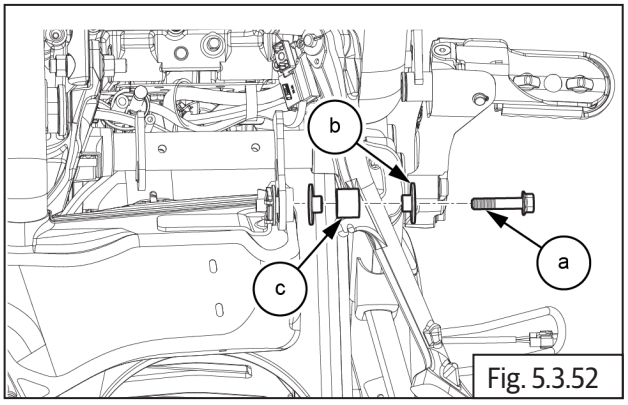

Fig. 5.3.52

	12 mm Socket with Ratchet

- Gently tap and pull the CAT box **(a)** outwards to remove.

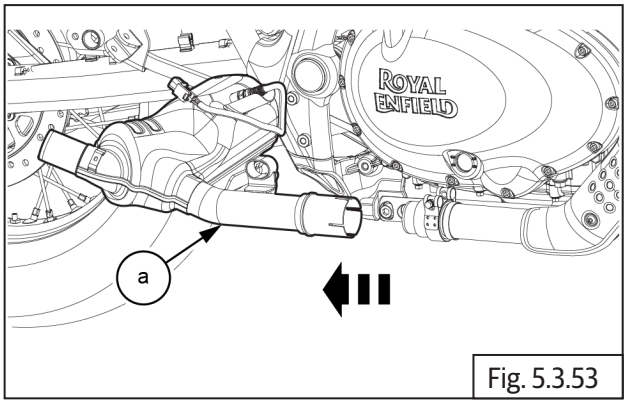

Fig. 5.3.53

	Mallet

5.3.24. Exhaust Pipe

- Loosen and remove **2 Nos** flange U nuts **(M8) (a)** from the exhaust pipe LH

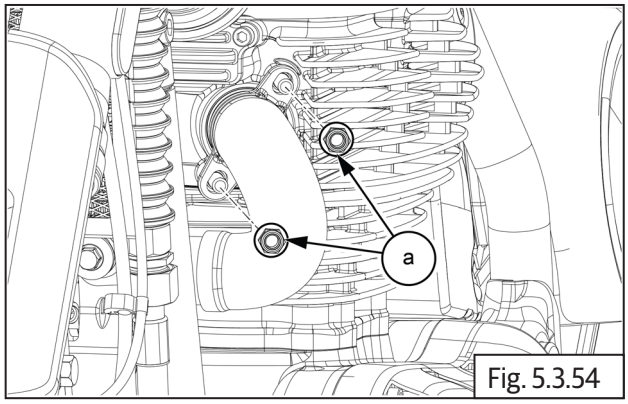

Fig. 5.3.54

	12 mm Socket with Ratchet

- Loosen hex flange bolt **(M8) (a)** from mounting clamp.

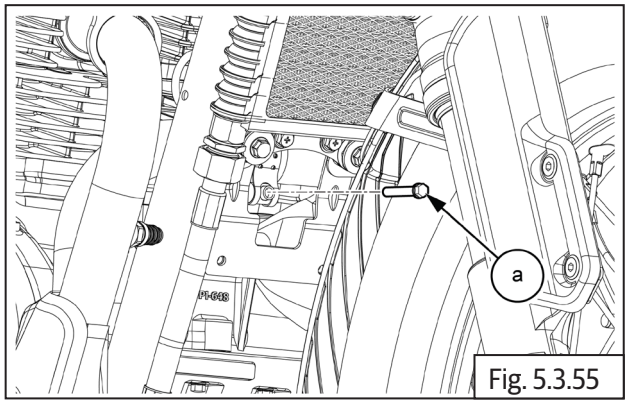

Fig. 5.3.55

	12 mm Socket with Ratchet

- Remove the LH exhaust pipe **(a)** from cylinder head.

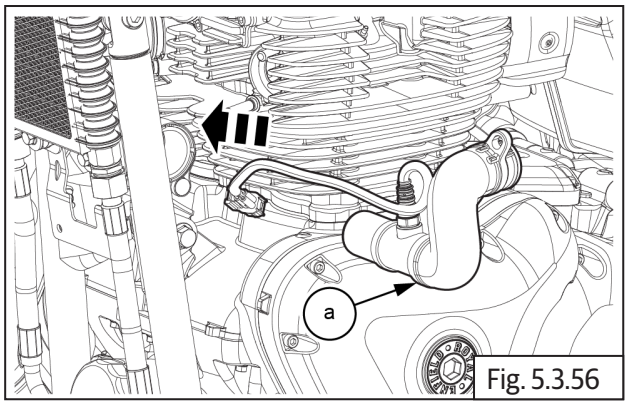

Fig. 5.3.56

- Loosen and remove **2 Nos** flange U nuts **(M8) (a)** from the Exhaust pipe RH

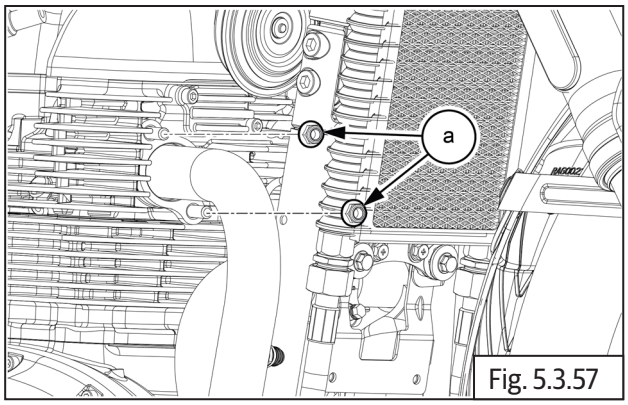

Fig. 5.3.57

	12 mm Socket with Ratchet

- Slightly slide forward and move the flange **(a)** from the Exhaust pipe RH.

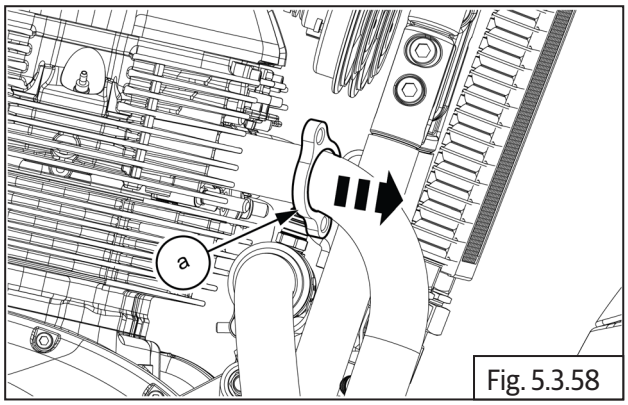

Fig. 5.3.58

- Remove the RH exhaust pipe **(a)** from cylinder head.

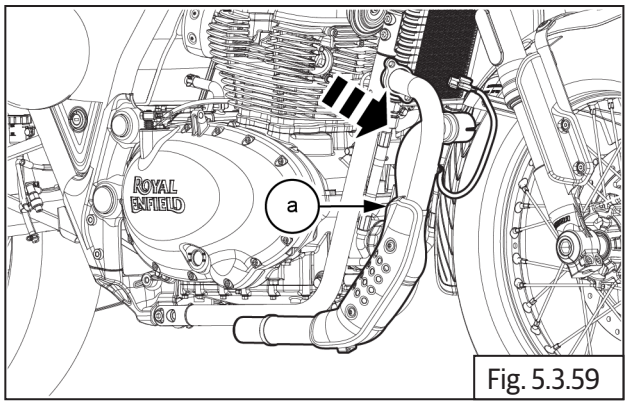

Fig. 5.3.59

5.3.25. Magneto/Gear Position/Side Stand

Magneto/Gear Position/Side Stand Switch Couplers Connections

- Disconnect the gear position sensor **(a)** located on rear side of engine **(b)**.

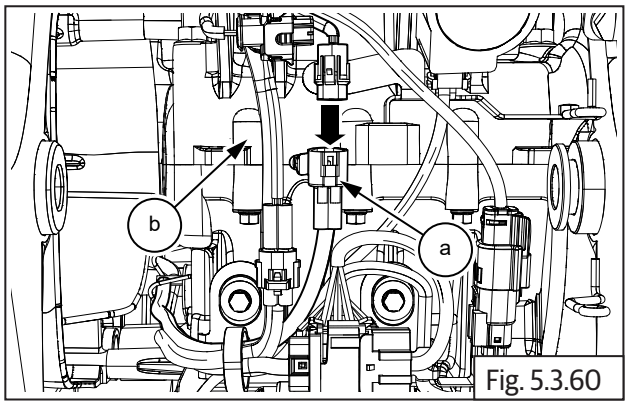

Fig. 5.3.60

- Disconnect magneto sensor connector **(a)** located on rear side of engine **(b)**.

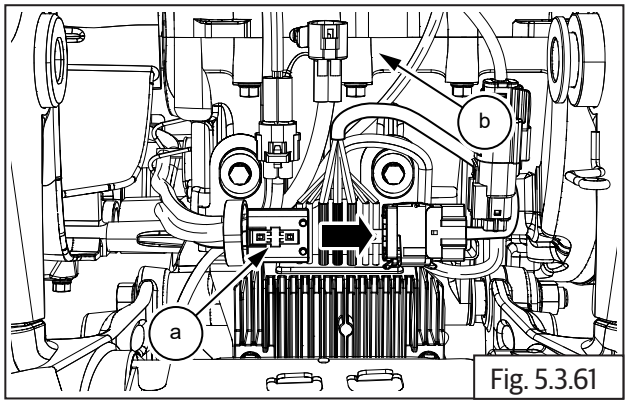

Fig. 5.3.61

- Disconnect side stand switch connector **(a)** located on rear bottom of engine **(b)**.
- Disconnect crank position sensor connector **(c)**.

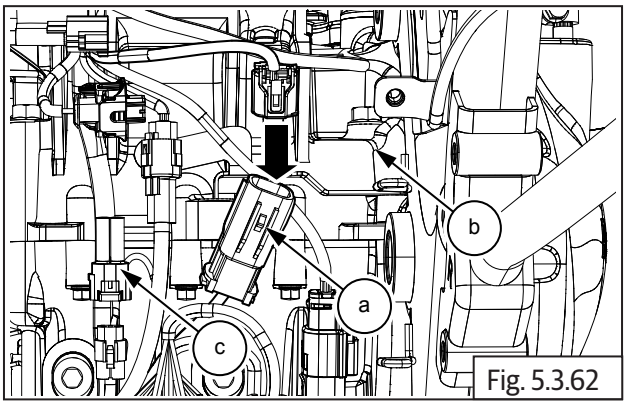

Fig. 5.3.62

5.3.26. Starter Motor Connection

- Loosen and remove Hex nut **(M6) (a)** from starter motor to disconnect positive (+) terminal.

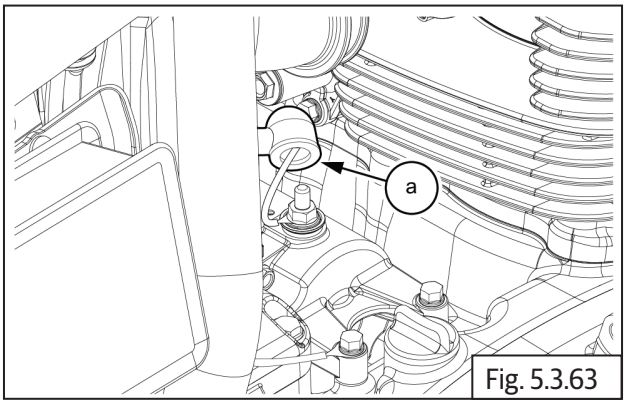

Fig. 5.3.63

	10 mm Combination Spanner

- Loosen and remove Hex flange head bolt **(M6) (a)** to disconnect starter motor positive (+) terminal **(b)**.

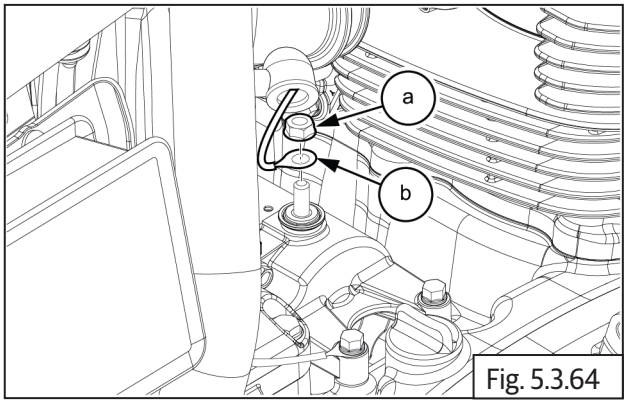

Fig. 5.3.64

	8 mm Combination Spanner

- Loosen and remove 2 Nos. Hex flange head bolt **(M6) (a)** to disconnect starter motor **(b)** negative (-) terminal.

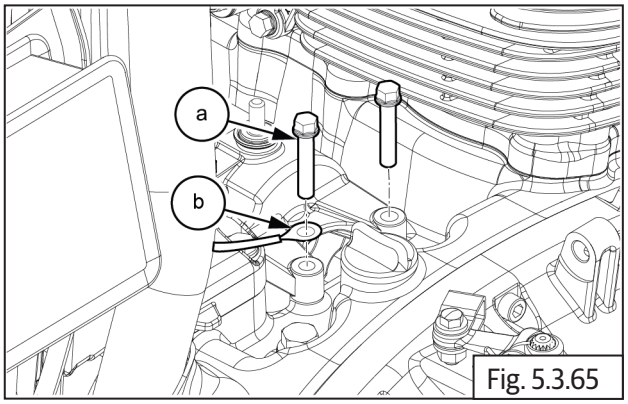

Fig. 5.3.65

	8 mm Combination Spanner

- Gently remove the stater motor **(a)** from the motorcycle.

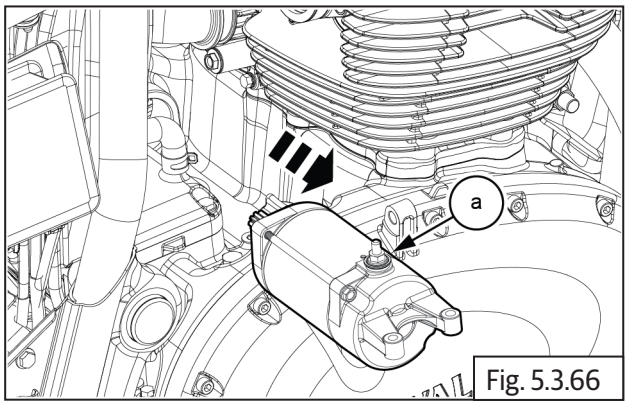

Fig. 5.3.66

5.3.27. Spark Plug Suppressor Caps on LH

- Gently pull out spark plug suppressor cap **(a)** from LH cylinder spark plug .

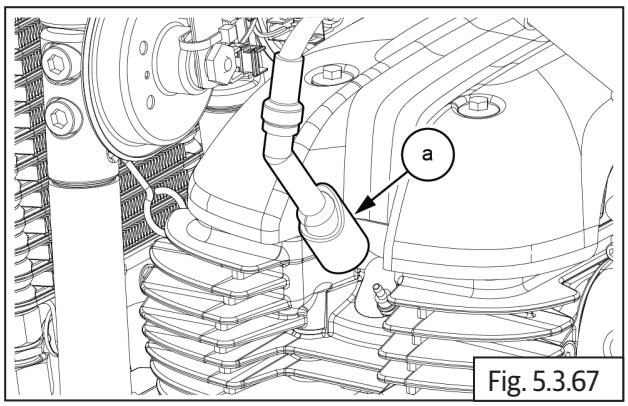

Fig. 5.3.67

- Gently pull out spark plug suppressor cap **(a)** from RH cylinder spark plug.

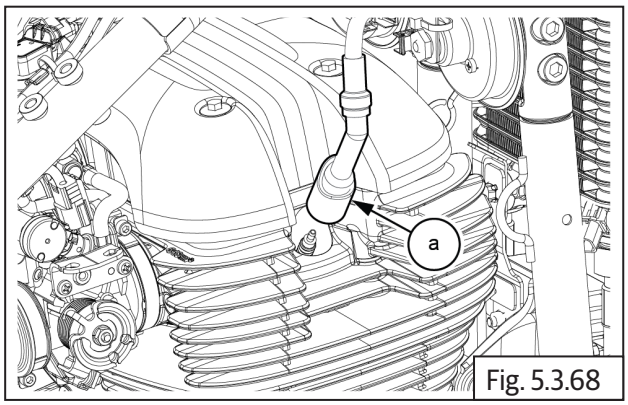

Fig. 5.3.68

5.3.28. Breather Hose Connection

(From Breather Box to Air Filter Box)

- Release the clamp **(a)** to disconnect breather hose from air filter box.

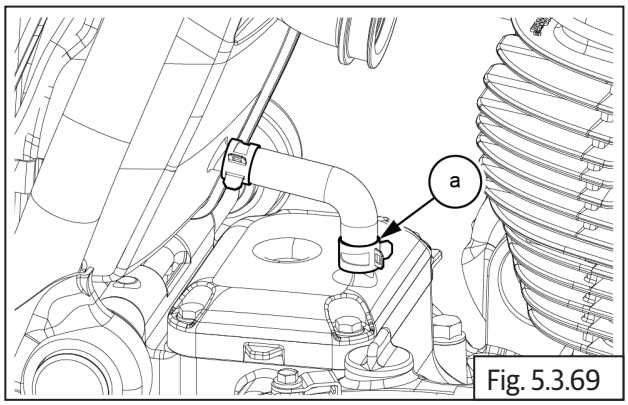

Fig. 5.3.69

	Nose plier

- Release clamp **(a)** to remove hose from breather box.

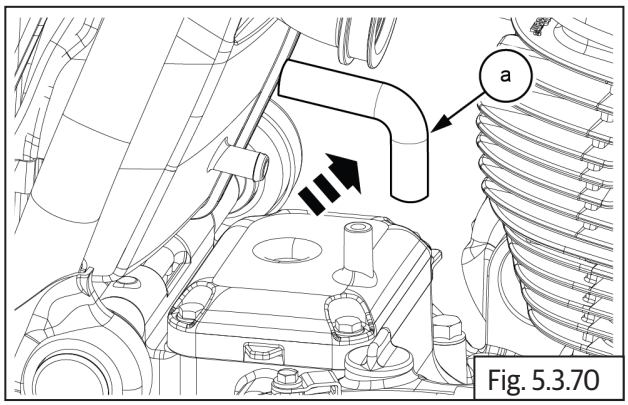

Fig. 5.3.70

	Nose plier

5.3.29. Gear Shift Linkage

- Loosen and remove Hex head flange bolt **(M6) (a)** from gear change clamp.

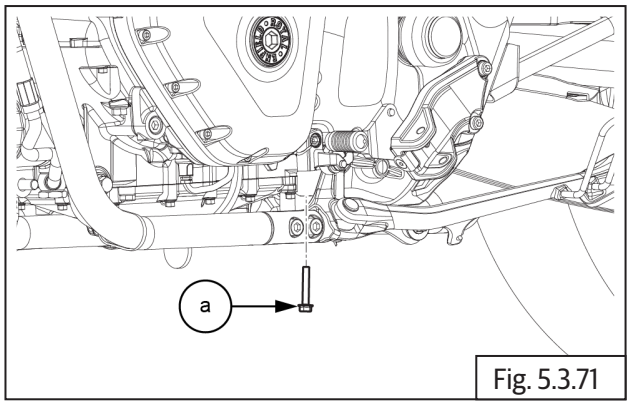

Fig. 5.3.71

	8 mm Socket with Ratchet/ Combination Spanner

- Slide and remove the gear change clamp **(a)** from gear shift shaft.

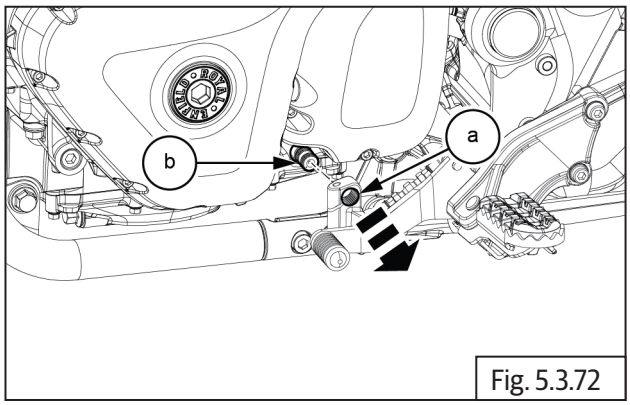

Fig. 5.3.72

- Loosen and remove 2 Nos cap bolts **(M8) (a)** from control plate .

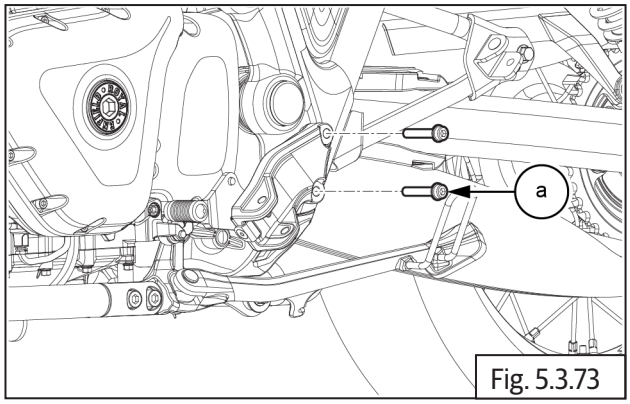

Fig. 5.3.73

	6 mm Allen Socket with Ratchet

- Remove control plate with gear shifter assembly **(a)** from frame.

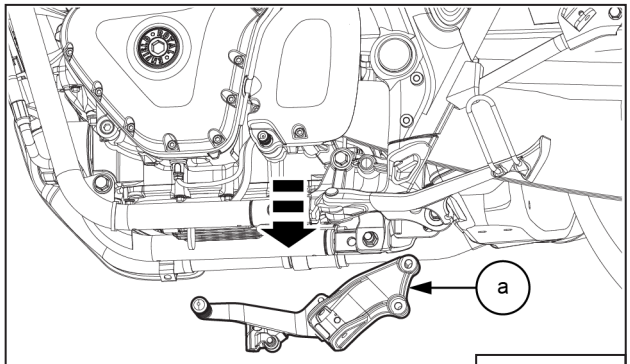

Fig. 5.3.74

5.3.30. FD Sprocket Cover

- Loosen and remove 3 Nos. Hex socket head screws **(M6) (a)** from FD sprocket cover on the LH side of engine, in the order shown (1, 2 & 3).

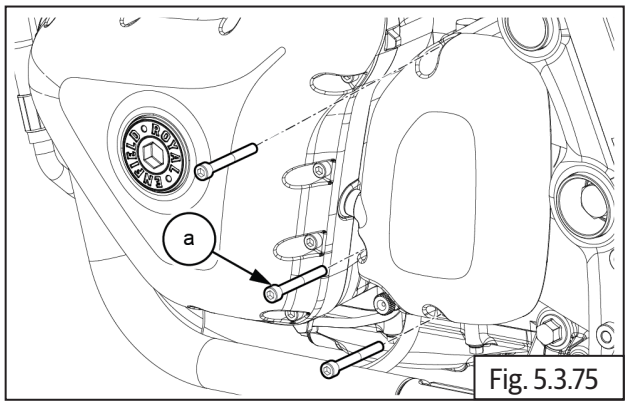

Fig. 5.3.75

	5 mm Allen socket with Ratchet

- Gently pull out FD sprocket cover **(a)**.

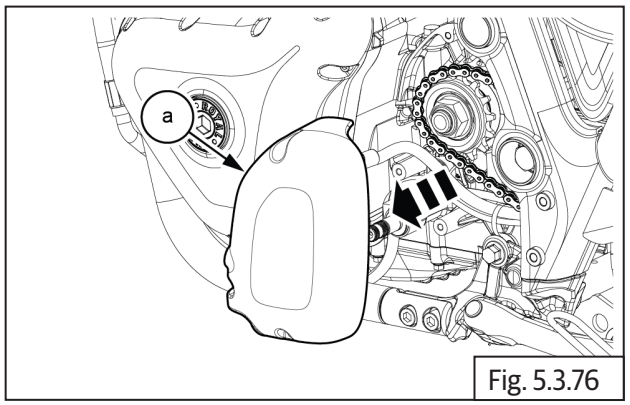

Fig. 5.3.76

5.3.31. Rear Wheel (Increasing chain slack)

- Loosen rear wheel axle nut **(M16) (a)** on RHSand wheel axle **(b)** on LHS to increase the chain slackness/tension.

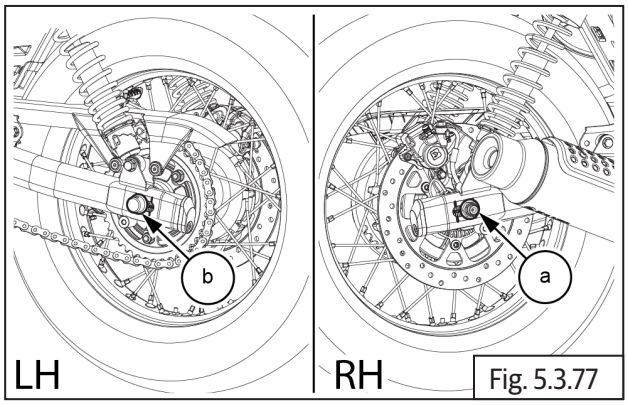

Fig. 5.3.77

	24 mm Socket with Ratchet

- Loosen chain adjuster lock nut **(M8) (a) and (b)**on LH and RH.

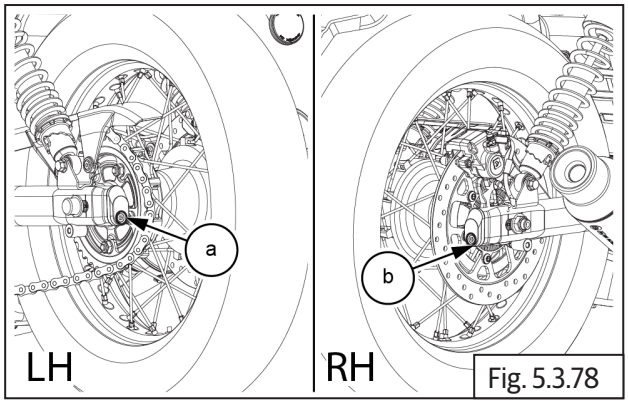

Fig. 5.3.78

	6mmAllen Socket with Ratchet

5.3.32. Remove Rear Chain from FD Sprocket

- Gently remove chain **(a)** from FD sprocket.

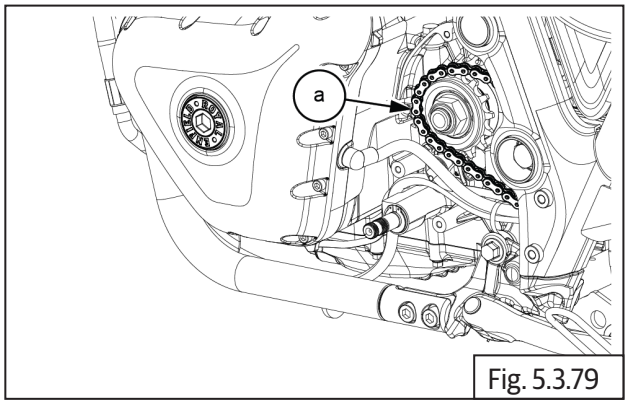

Fig. 5.3.79

5.3.33. Gear Position Indicator Sensor

- Loosen and remove 2 Nos. Hex flange head bolts **(M6) (a)** and clamp **(b)** from GPS Sensor.

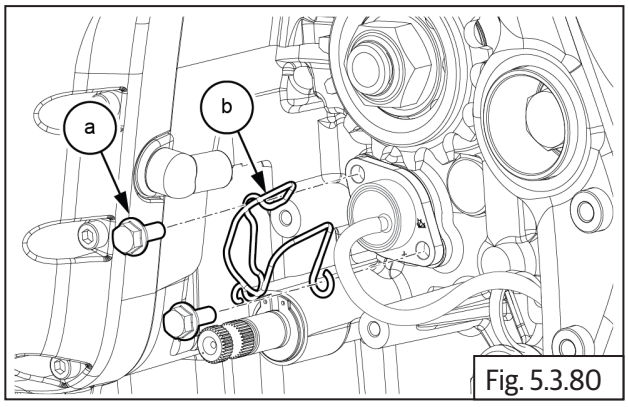

Fig. 5.3.80

	10 mm Socket with Ratchet

- Remove gear position sensor **(a)** along with the bracket.

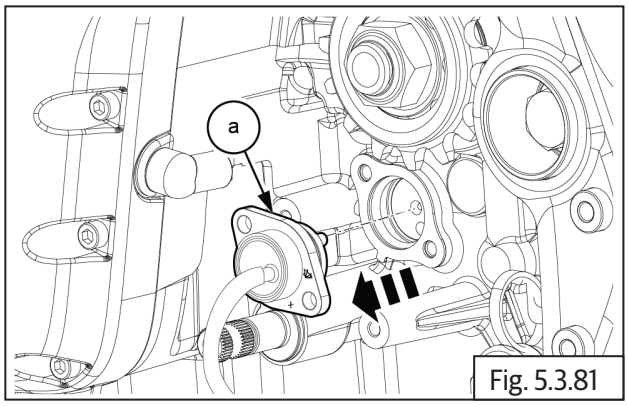

Fig. 5.3.81

5.3.34. Cradle Frame Top Mountings

Cradle Frame Top Mountings from Main Frame

- Support engine/cradle frame with scissor jack **(a)** so that it will not fall off when mounting bolts are removed.

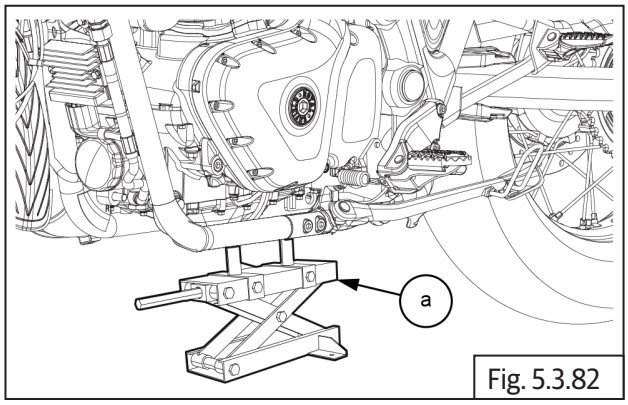

Fig. 5.3.82

- Loosen and remove 2 Nos. Hex socket head bolts **(M10) (a)** on LH and RH (each) holding cradle frame top **(b)** on main frame **(c)**.

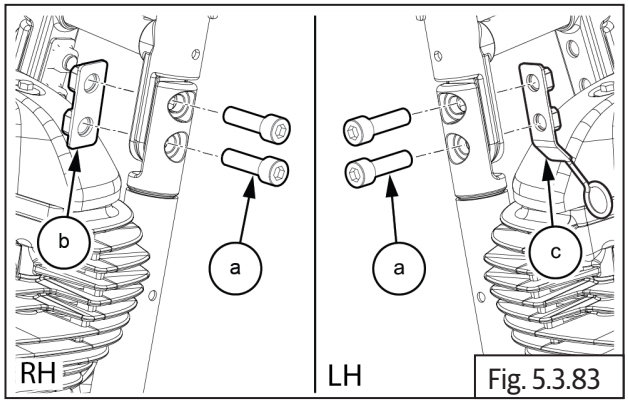

Fig. 5.3.83

	8 mm Allen socket with Ratchet

5.3.35. Cradle Frame Bottom Mountings

Cradle Frame Bottom Mounting LH and RH from Main Frame

- Locate and loosen 2 Nos. Hex socket head bold **(M10) (a)** from sub frame.

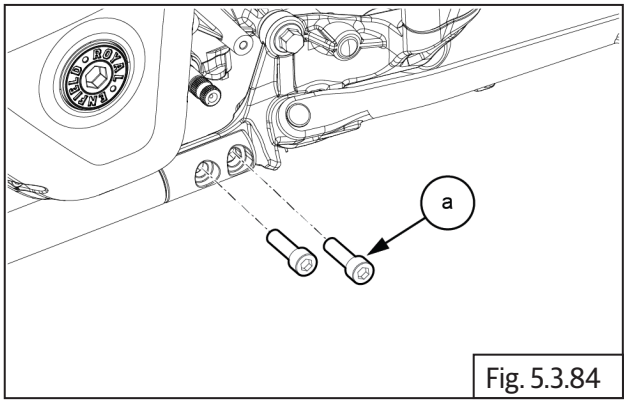

Fig. 5.3.84

	8 mm Allen socket with Ratchet

- Loosen and remove Hex socket head bolt **(a)** and nut **(b)** mounted on main frame.

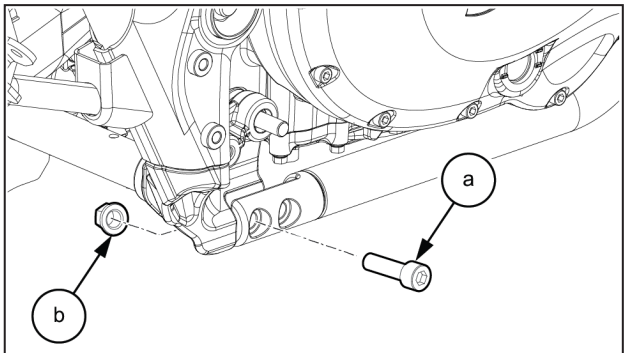

Fig. 5.3.85

	8 mm Allen socket with Ratchet

5.3.36. Rear Top Engine Mountings

Rear Top Engine Mounting from Main Frame

- Loosen and remove frame bed axle **(M10) (a)** along with washer from RH top mainframe.

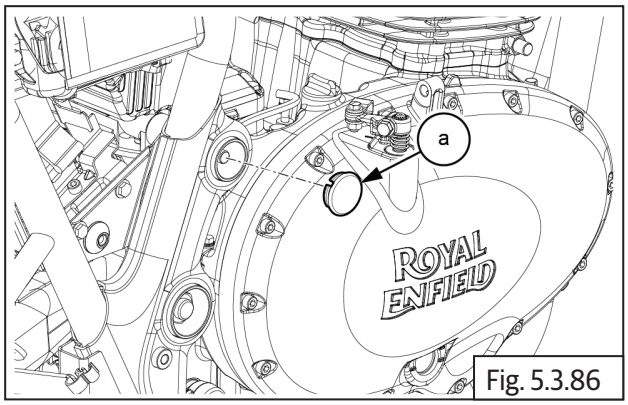

Fig. 5.3.86

	14 mm Socket with Ratchet

- Loosen and remove Hex nut **(M10) (a)** along with washer **(b)** from RH top mainframe.

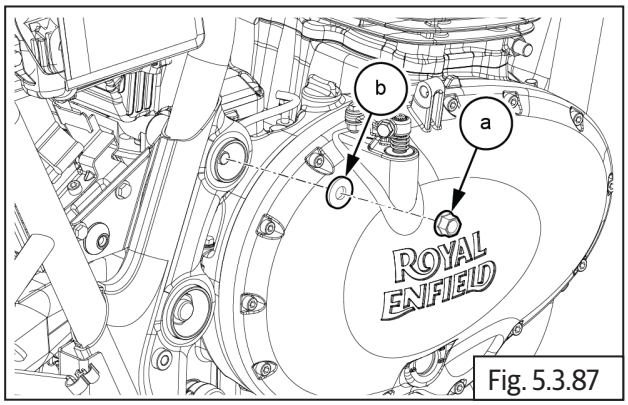

Fig. 5.3.87

	14 mm Socket with Ratchet

- Locate special tool **(a)** on main frame to loosen top mounting adjuster from frame RH on rear side of engine.

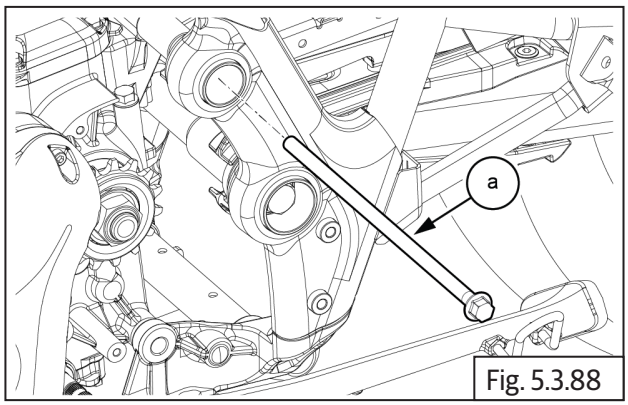

Fig. 5.3.88

- Locate special tool **(a)** on main frame to loosen top mounting adjuster from frame RH on rear side of engine.

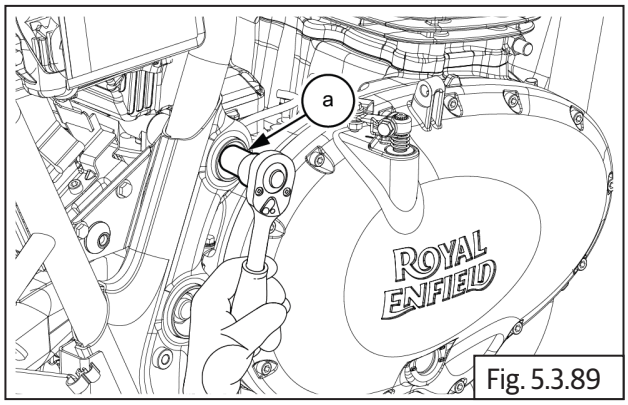

Fig. 5.3.89

SPL 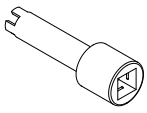	Part No: ST30267/A
	Part Name: Frame Adj OD 14.8/ID 10.8 mm-Engine

- Locate special tool **(a)** on main frame to loosen top mounting adjuster from frame RH on rear side of engine.

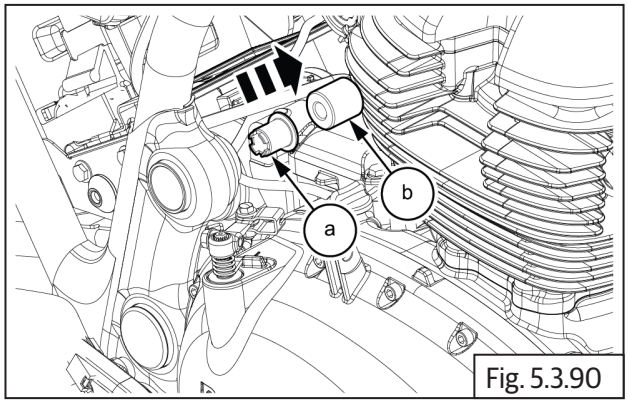

Fig. 5.3.90

SPL 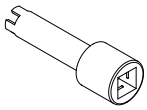	Part No: ST30267/A
	Part Name: Frame Adj OD 14.8/ID 10.8 mm-Engine

- Remove Hex nut **(M10) (a)** and washer from rear lower bottom of engine RH OR clutch cover **(b)**.

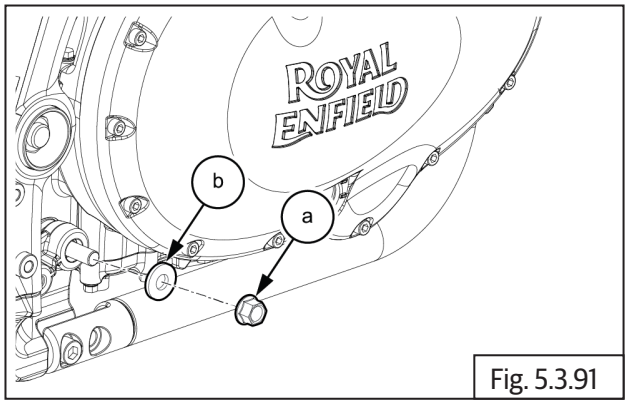

Fig. 5.3.91

	14 mm Socket with Ratchet

- Remove Hex nut **(M10) (a)** and washer from rear lower bottom of engine RH OR clutch cover.

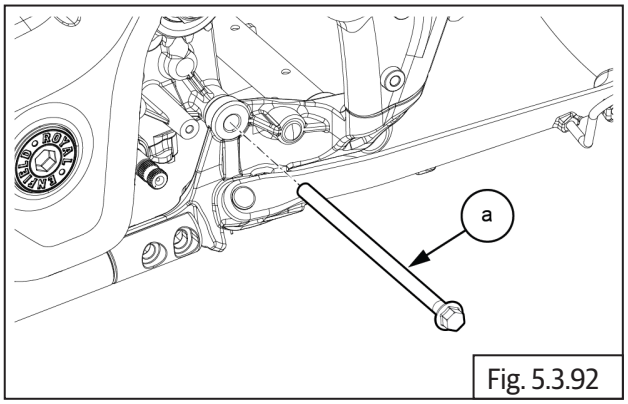

Fig. 5.3.92

- Locate special tool **(a)** on rear RH lower bottom of engine to remove adjuster from frame RH.

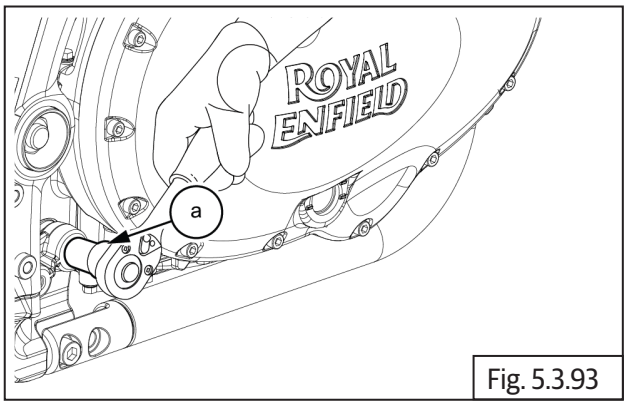

Fig. 5.3.93

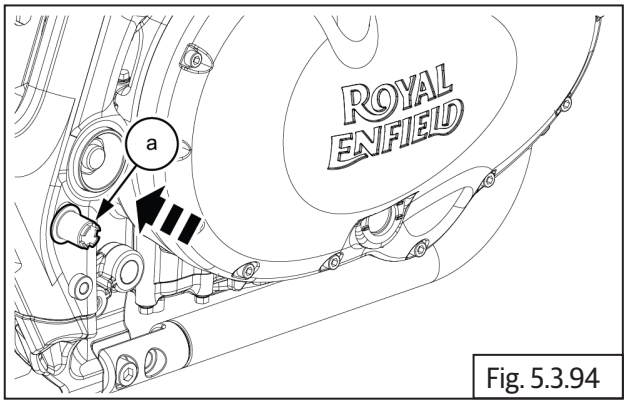

Fig. 5.3.94

SPL 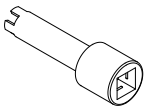	Part No: ST30268/a
	Part Name: Frame Adj OD 16.7/ID 13 mm-Engine

5.3.37. Engine from Main Frame

Lower Bottom Support and Slide Out Engine along with Cradle Frame from Main Frame

- Ensure bottom of engine is supported suitably.
- Gently lower engine with cradle frame from main frame.

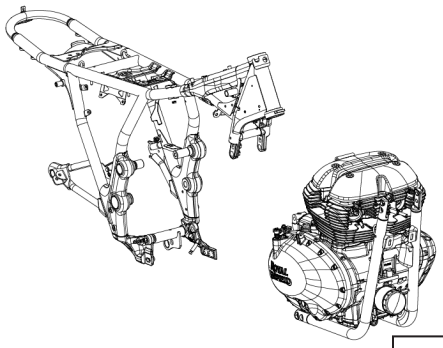

Fig. 5.3.95

5.3.38. Mounting Studs of Engine to Cradle Frame

Four Mounting Studs of Engine to Cradle Frame

- Support the engine suitably.
- Loosen and remove Hex flange head bolt **(M10) (a)** along with nut **(M10) (b)** and washers **(c)** from LH lower bottom of engine.

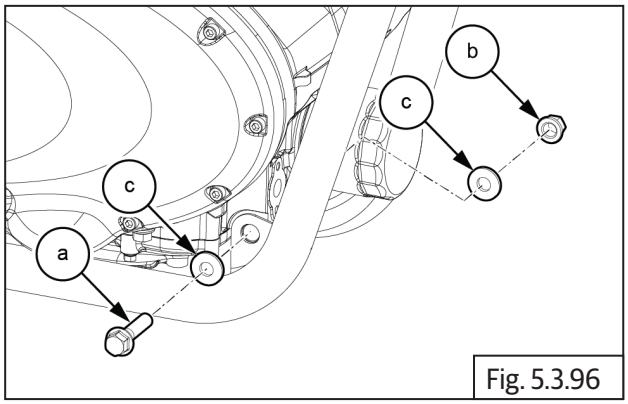

Fig. 5.3.96

	14 mm Socket with Ratchet

- Loosen and remove Hex flange head bolt **(M10) (a)** along with washer **(c)** from LH front top of engine to cradle frame **(b)**.

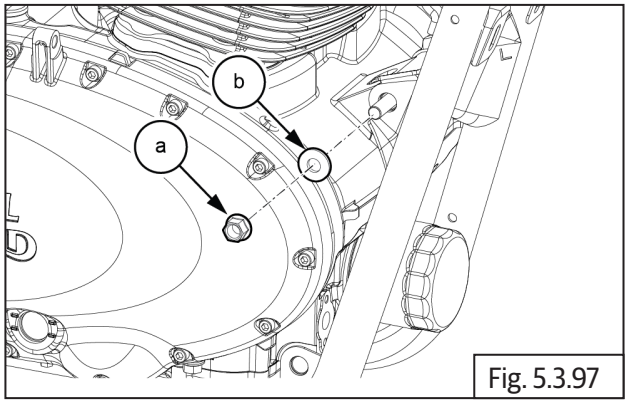

Fig. 5.3.97

- Loosen and remove Hex flange head bolt **(M10) (a)** along with washer **(b)** from LH front top of engine to cradle frame.

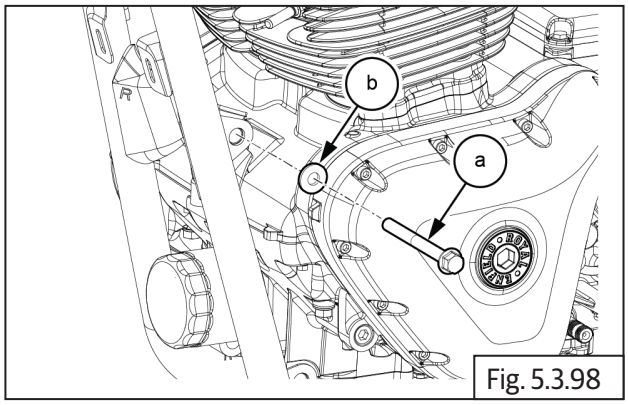

Fig. 5.3.98

	14 mm Socket with Ratchet

- Loosen and remove Hex flange head bolt **(M10) (a)** along with washer **(c)** from LH front top of engine to cradle frame **(b)**.

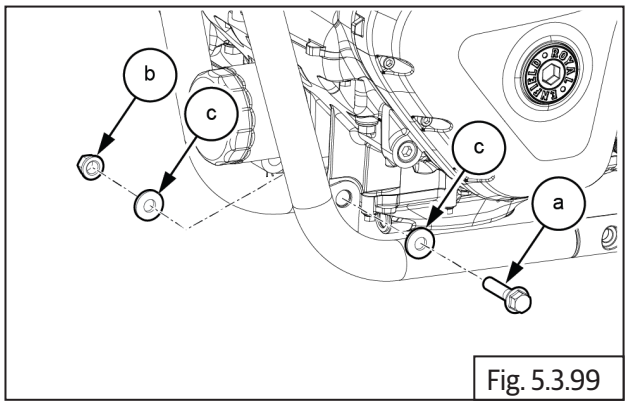

Fig. 5.3.99

	14 mm Socket with Ratchet

- Separate cradle frames **(a)** from engine and keep it in storage bin.

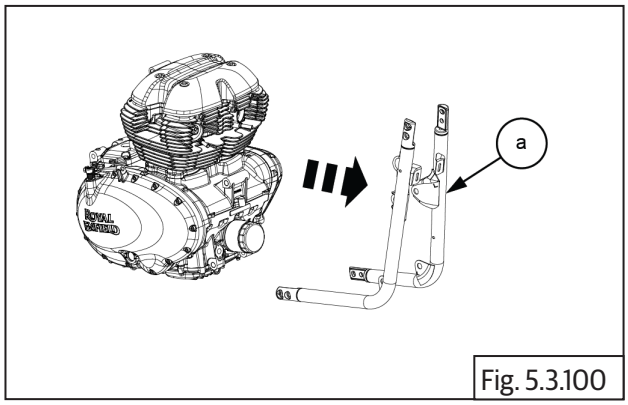

Fig. 5.3.100

ENGINE ASSEMBLY TO FRAME

CONTENTS **PAGE**

Components Assembly Sequence to Assemble Engine into Frame - Flow Chart 160

5.4 Engine Assembly to Frame 166

5.4.1 Cradle Assembly RH 167

5.4.2 Cradle Assembly LH 167

5.4.3 Cradle Frame with Engine to Mainframe.....167

5.4.4 Cradle Frame Top Mountings 169

5.4.5 Cradle Frame Bottom Mountings LH 169

5.4.6 Cradle Frame Bottom Mounting RH.....169

5.4.7 Cradle Frame Mounting Final Torque 170

5.4.8 Engine Cylinder Head Steady Bracket 171

5.4.9 Main Frame to Engine Mounting Bolts.....172

5.4.10 Gear Position Indicator Sensor 173

5.4.11 Rear Chain to FD sprocket 173

5.4.12 FD Sprocket Cover 174

5.4.13 Gear Shift Linkage 174

5.4.14 Breather Hose Connection 175

5.4.15 Spark Plug Suppressor Caps.....176

5.4.16 Starter Motor Connections.....176

5.4.17 Magneto/Side Stand Switch Connectors 177

5.4.18 Exhaust Pipe on Cylinder Head RH 177

5.4.19 Exhaust Pipe on Cylinder Head LH 178

5.4.20 Silencer 180

5.4.21 Hego Sensor / Oxygen Sensor Connectors.....182

5.4.22 Throttle Body 182

5.4.23 Air Filter Housing to Throttle Body 183

CONTENTS **PAGE**

5.4.24 Injector, TPS and Map Connections 183

5.4.25 Throttle Cables 184

5.4.26 Throttle Body Covers on LH and RH 184

5.4.27 Fuel Tank 185

5.4.28 EVAP to Fuel Tank Connections 185

5.4.29 Fuel Hose (Fuel Pump to Injector) 185

5.4.30 Fuel Level Sensor and Fuel Pump 185

5.4.31 Clutch Cable 186

5.4.32 Battery Connections 187

5.4.33 Seat Assembly 187

5.4.34 Side Panel LH and RH 188

5.4.35 Oil Filter 188

5.4.36 Oil Cooler Mountings to Frame 180

5.4.37 Oil Cooler Inlet and Outlet Pipes 180

5.4.38 Drain Bolt and Engine Oil Re-fill 180

5.4.39 Oil Pressure Checking Procedure 180

COMPONENTS ASSEMBLY SEQUENCE TO ASSEMBLE ENGINE INTO FRAME - FLOW CHART

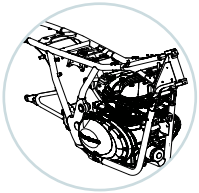

Assemble cradle frame to engine using four mounting bolts

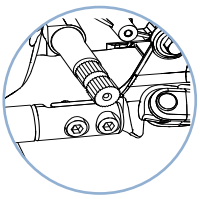

Support engine with cradle frame assembly and position into main frame from LH side

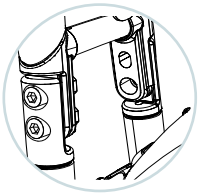

Align cradle frame with main frame mounting holes and locate front and rear mounting bolts

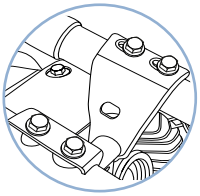

Position engine steady bracket LH and RH on engine rear top and tighten with bolts

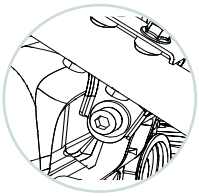

Align steady bracket mounting holes to frame and tighten with bolt

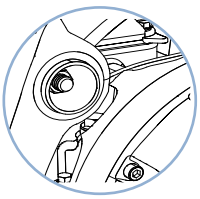

Centralize engine to rear frame, top and center mountings and tighten adjusters using special tools

C

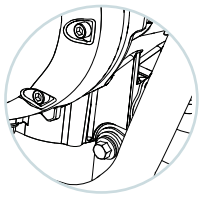

Assemble washers and nuts on mounting bolts and tighten cradle frame to main frame

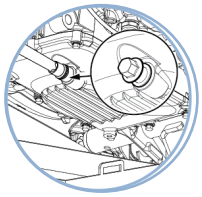

Assemble engine oil drain bolt

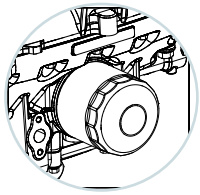

Assemble oil filter

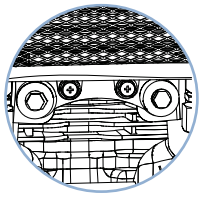

Assemble oil cooler on frame

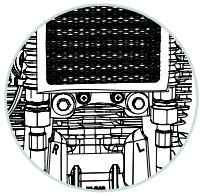

Assemble oil cooler inlet and outlet pipes to engine

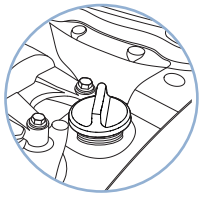

Fill engine oil



Assemble FD sprocket on drive shaft

C

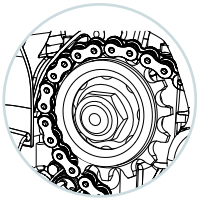

Assemble rear chain on FD sprocket

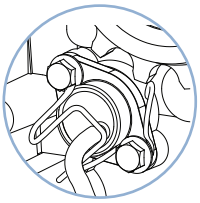

Assemble gear position indicator sensor with bracket on engine LH side

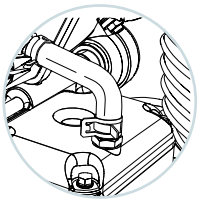

Connect breather hose between breather and air filter

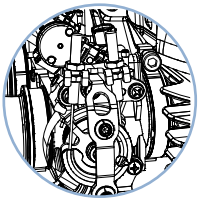

Assemble throttle body on engine

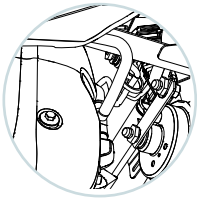

Connect reed valve hose

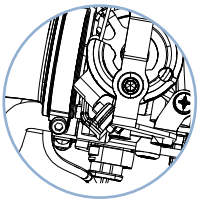

Connect air inlet hoses to throttle body

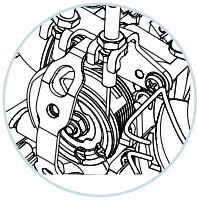

Connect throttle cables to throttle body

C

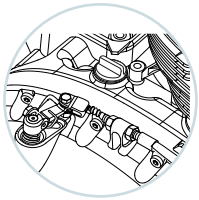

Connect clutch cable

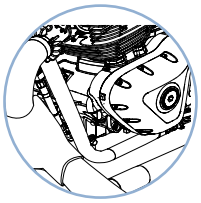

Assemble LH and RH exhaust pipe and silencer

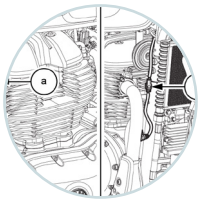

Connect Hego/Oxygen sensor connectors to main wiring harness

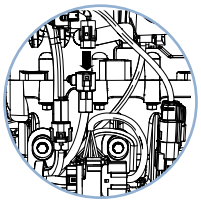

Connect Magneto/Side stand switch connectors to wiring harness

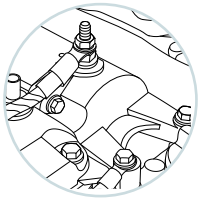

Assemble starter motor and wiring connections

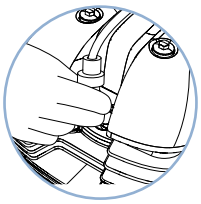

Locate spark plug suppressor caps on LH and RH spark plugs

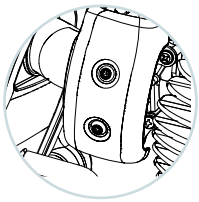

Assemble throttle body covers on LH and RH sides of throttle body

C

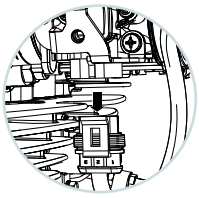

Connect Injector, TPS and Map Sensor connectors to wiring harness

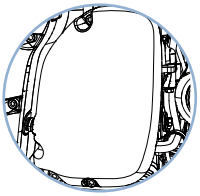

Assemble FD sprocket cover

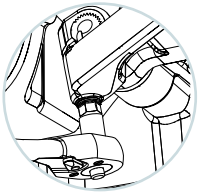

Assemble gear shift linkage to gear shaft

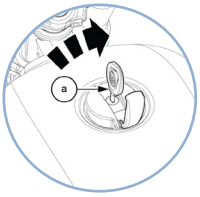

Position fuel tank on frame

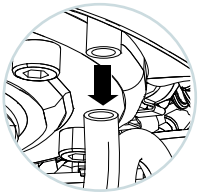

Connect EVAP and drain hoses to fuel tank

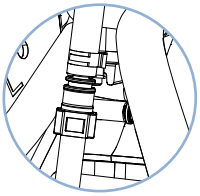

Connect fuel feed hose (fuel pump to injector)

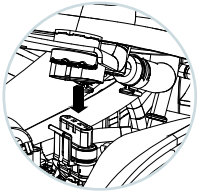

Connect fuel level sensor and fuel pump connector to wiring harness

C

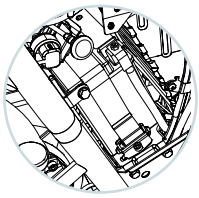

Position battery in carrier and connect positive (+) and negative (-) terminals.
(Ensure ignition and stop switches are in OFF position before connecting battery cables)

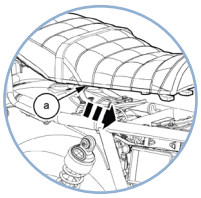

Assemble seat

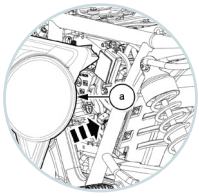

Assemble side panel LH and RH

5.4 Engine Assembly to Frame

5.4.1. Cradle Assembly RH

⚠ WARNING

DO NOT tighten bolts during initial installation.

- Support engine suitably and firmly on a work table and ensure it is stable.
- Locate cradle frame RH **(a)** on engine RH side **(b)**.

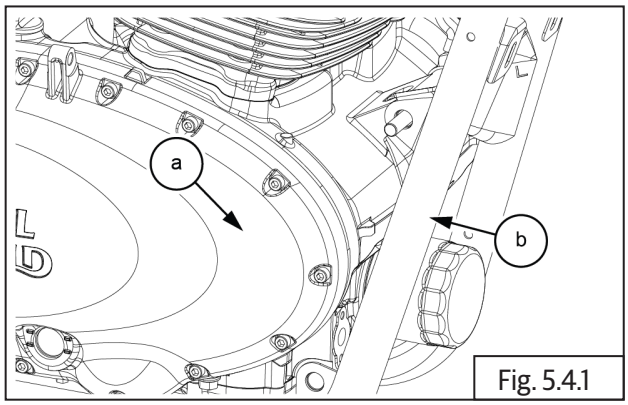

Fig. 5.4.1

- Align mounting holes **(a)** of cradle frame with mounting holes on engine.

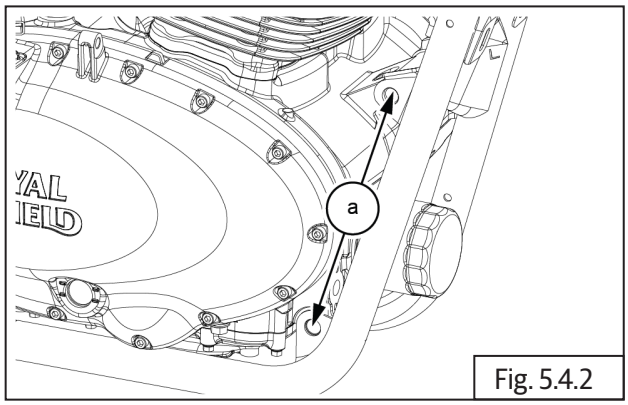

Fig. 5.4.2

- Insert Hex head bolt long **(M10) (a)** with washer **(b)** into mounting holes on cradle frame RH top. **DO NOT TIGHTEN FULLY**.

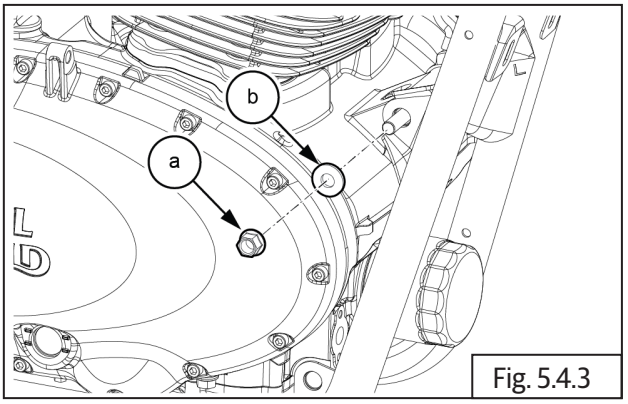

Fig. 5.4.3

- Insert Hex head bolt small **(M10) (a)** into mounting holes on cradle frame RH **(b)** bottom.
- Assemble washer and nut **(c)** on bolt. **DO NOT TIGHTEN FULLY**.

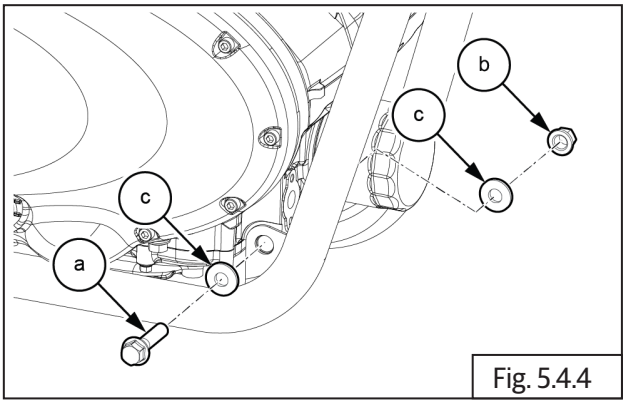

Fig. 5.4.4

	14 mm socket with Ratchet

5.4.2. Cradle Assembly LH

- Locate cradle frame LH on engine LH side, duly ensuring top mounting on cradle frame is located on bolt.
- Assemble washer and Hex nut **(M10) (b)** on long bolt **(a)** on LH and tighten nut just sufficiently. **DO NOT TIGHTEN FULLY**.

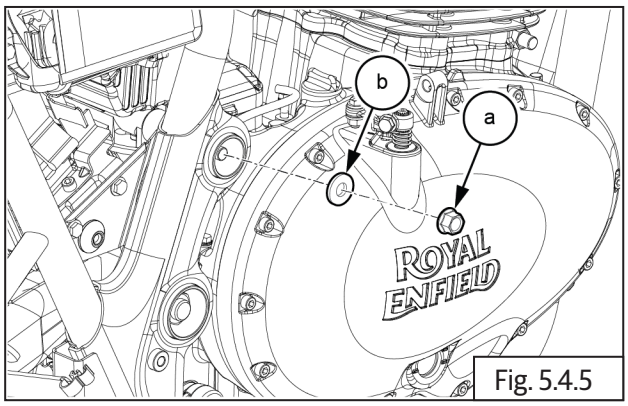

Fig. 5.4.5

- Align bottom mounting hole of cradle frame LH **(a)** with mounting hole on engine **(b)**.

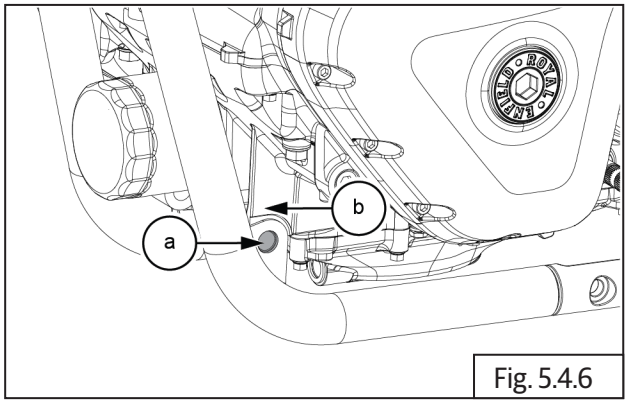

Fig. 5.4.6

- Insert Hex head bolt small (M10) **(a)** along with washer **(c)** and nut **(b)** into bottom mounting hole on cradle frame front LH**.**

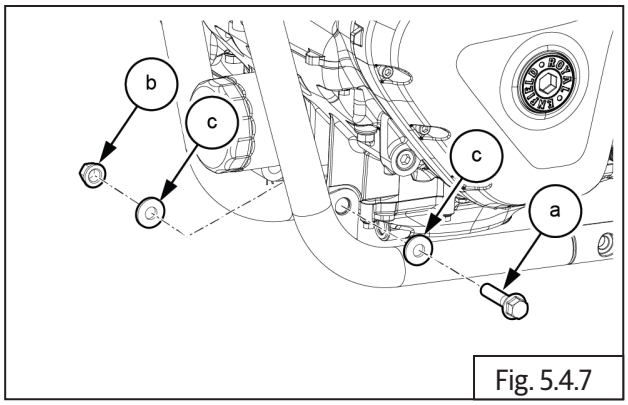

Fig. 5.4.7

5.4.3. Cradle Frame with Engine to Main-frame

NOTE

- *Ensure motorcycle is upright on a firm and flat surface.*
- *Ensure the front and rear wheels are clamped firmly to motorcycle ramp.*
- *Slide the cradle frames with engine into main frame only from the LH side and with rear end of engine into mainframe first.*
- *Ensure frame adjusters at rear end of mainframe and all other mounting holes are aligned correctly with cradle frames for ease of assembly.*
- *Lift engine with cradle frame into mainframe by suitable supporting from the bottom of engine.*

- Insert Hex flange head bolt long **(M10)** into bottom rear mounting on frame LH.

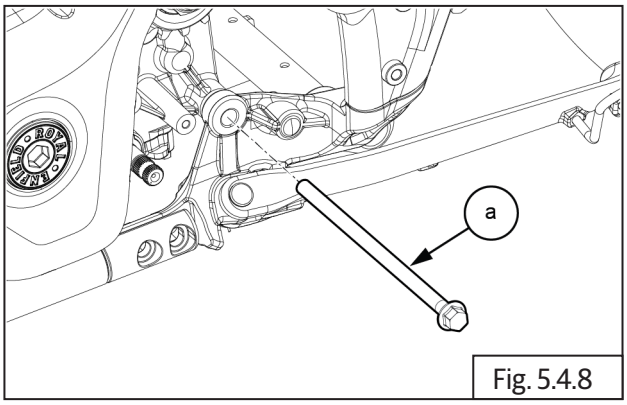

Fig. 5.4.8

- Insert adjuster **(a)** on rear bottom frame **(b)**.

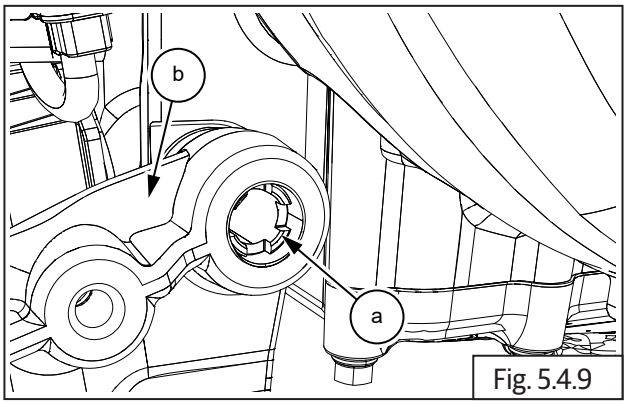

Fig. 5.4.9

- Place special tool on adjuster **(a)** and gently adjust till frame holds engine properly.

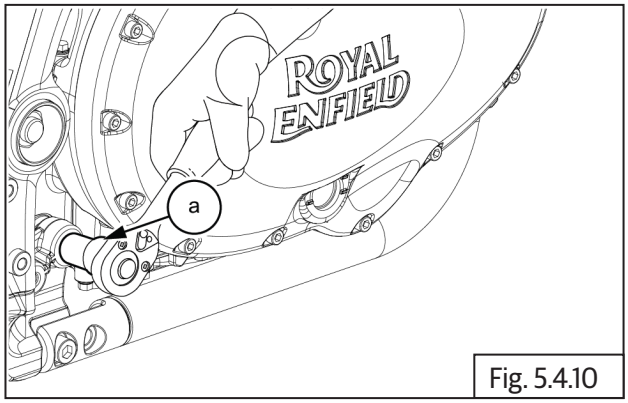

Fig. 5.4.10

SPL 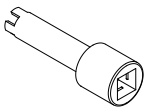	Part No:ST30268/a Part Name: Frame Adj OD 16.7/ID 13 mm-Engine with Ratchet

- Insert thick washer **(b)** and Hex nut **(M10) (a)** into other end of lower rear crankcase mounting bolt and gently tighten nut **(a)**.

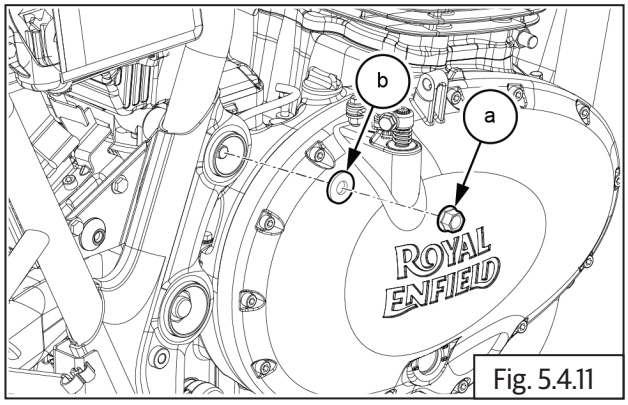

Fig. 5.4.11

	14 mm Socket with Ratchet

- Insert Hex head flanged mounting bolt **(M10) (a)** on engine rear top from LH frame along with spacer **(b)**. **DO NOT TIGHTEN FULLY**.

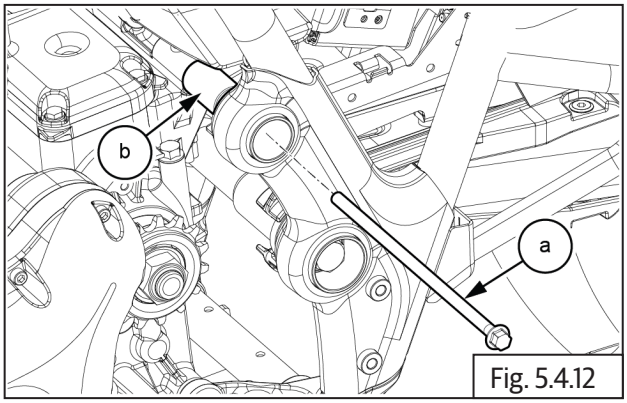

Fig. 5.4.12

- Gently locate RH spacer **(a)** on rear top of RH frame.

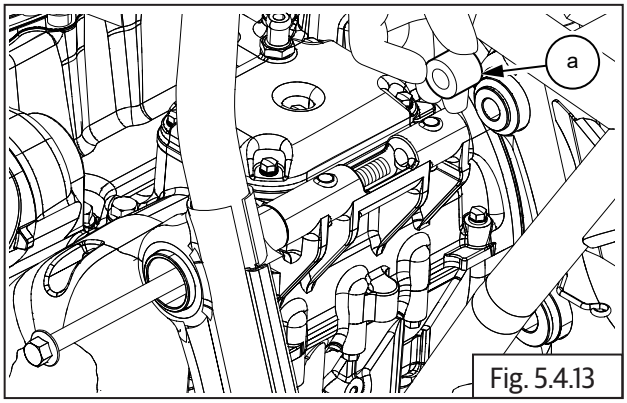

Fig. 5.4.13

- Place special tool on adjuster **(a)** on RH and gently adjust to align the engine to frame.

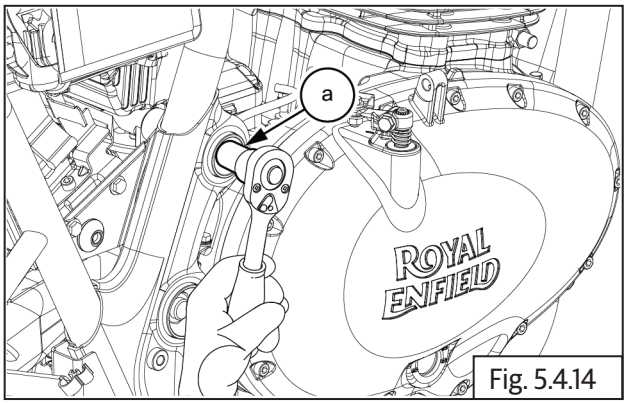

Fig. 5.4.14

SPL 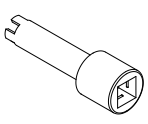	Part No: ST30267/a Part Name: Frame adjuster OD 14.8/ID 10.8 mm engine

- Locate thick washer **(b)** along with Hex nut **(M10) (a)** on other end of crankcase mounting bolt on cradle frame RH. Tighten the nut just sufficiently.

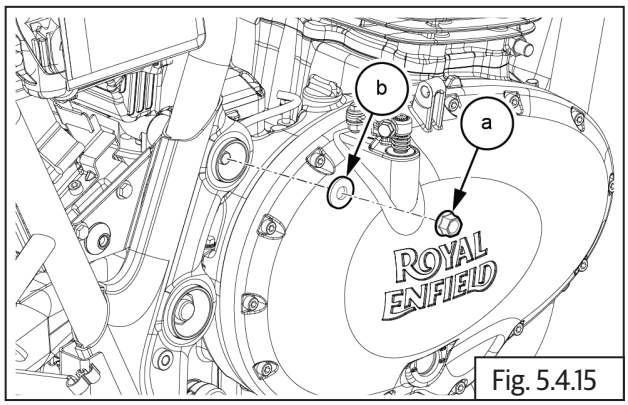

Fig. 5.4.15

	14 mm Socket with Ratchet
	43-47 Nm / 4.3 - 4.7 kgf-m

5.4.4. Cradle Frame Top Mountings

Cradle Frame Top Mountings to Main Frame

- Locate 2 Nos. Hex socket bolts **(M10) (a)** and nut, locating back plate **(b)** on RH cradle frame top along with locating back plate **(c)** on LH cradle frame top to main frame. **DO NOT TIGHTEN FULLY**.

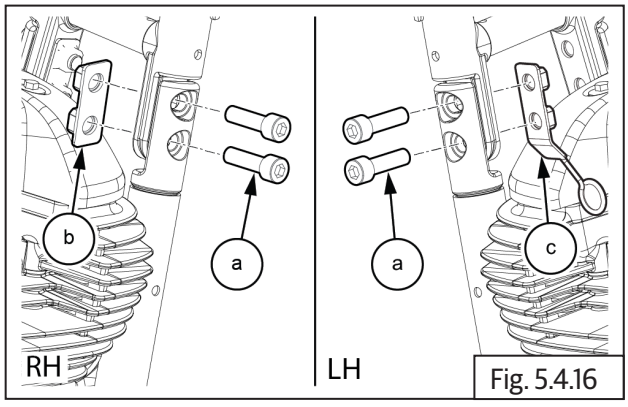

Fig. 5.4.16

	8 mm Allen Socket with Ratchet

5.4.5. Cradle Frame Bottom Mountings

Cradle Frame Bottom Mounting LH to Main Frame

- Align lower part of cradle frame to main frame LH.
- Locate back plate **(a)** with 2 Nos. Hex socket bolts **(M10) (b)** on rear LH cradle frame bottom to main frame. **DO NOT TIGHTEN FULLY**.

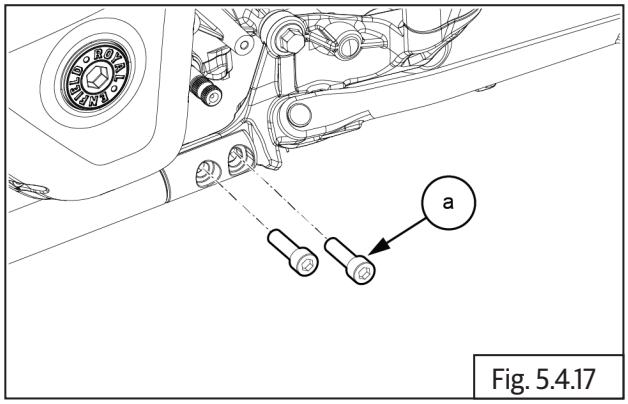

Fig. 5.4.17

	8 mm Allen Socket with Ratchet

5.4.6. Cradle Frame Bottom Mounting RH

Cradle Frame Bottom Mounting RH to Main frame

- Align lower part of cradle frame to main frame RH.
- Locate nut **(a)** with Hex socket bolt **(M10) (b)** on rear RH cradle frame bottom to main frame. **DO NOT TIGHTEN FULLY.**

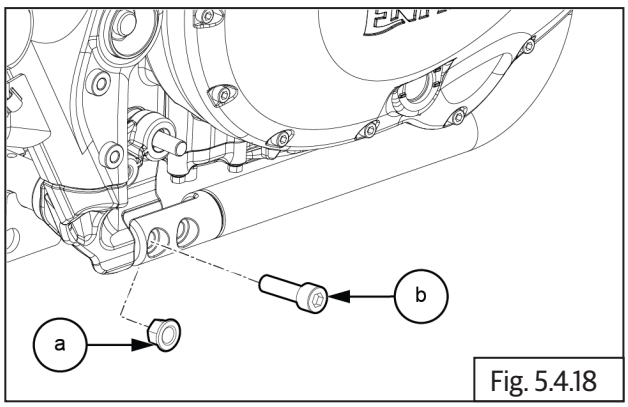

Fig. 5.4.18

	14 mm Socket with Ratchet 8 mm Allen socket with Ratchet

5.4.7. Cradle Frame Mounting Final Torque

Cradle Frame to Engine Mounting Final Torque

- Locate and tighten **(M6)** Hex nut **(a)** and washer **(b)**.

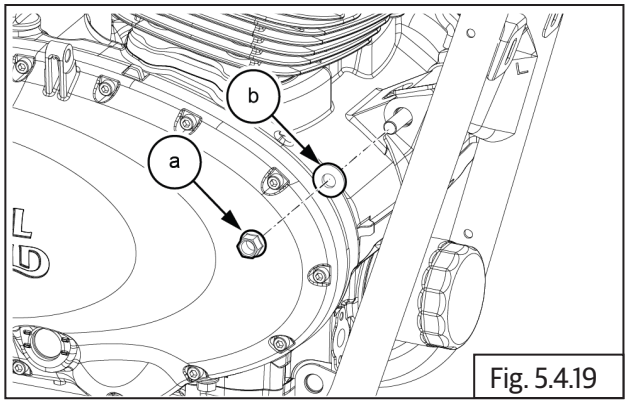

Fig. 5.4.19

	14 mm Socket with Ratchet
	43-47 Nm / 4.3 - 4.7 kgf-m

- Tighten Hex head bolt **(M10) (a),** nut **(b)** and 2 Nos washer **(c)** into mounting holes on cradle frame RH bottom to torque.

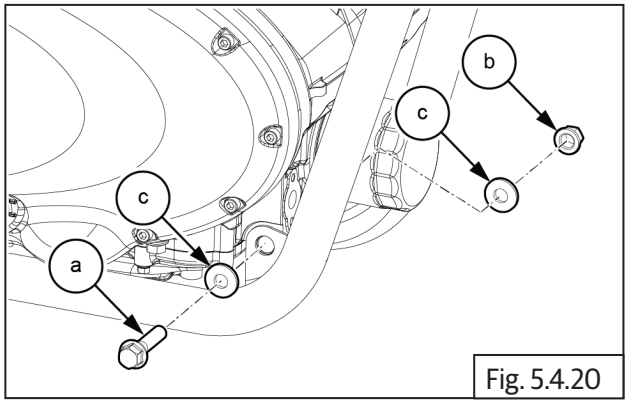

Fig. 5.4.20

	14 mm Socket with Ratchet
	43-47 Nm / 4.3 - 4.7 kgf-m

- Locate 2 Nos. Hex socket bolts **(M10) (a)** and nut, locating back plate **(b)** on RH cradle frame top along with locating back plate **(c)** on LH cradle frame top to main frame

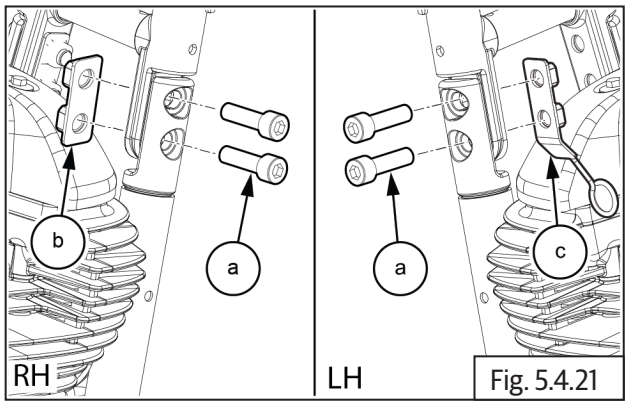

Fig. 5.4.21

	8 mm Allen socket with Ratchet
	43-47 Nm / 4.3 - 4.7 kgf-m

- Tighten 2 Nos. Hex socket bolts **(M10) (a)** on rear LH cradle frame to main frame.

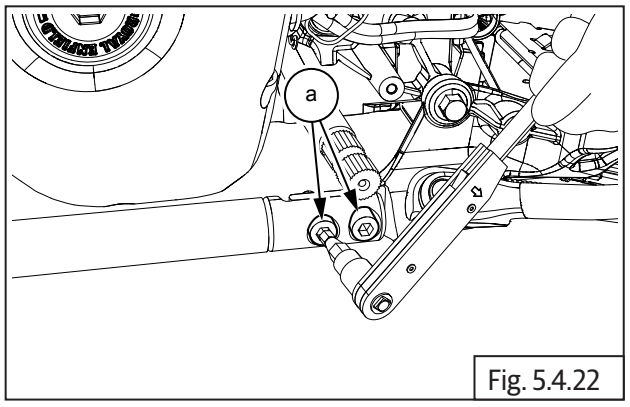

Fig. 5.4.22

	8 mm Allen socket with Ratchet
	43-47 Nm / 4.3 - 4.7 kgf-m

- Tighten Hex socket bolt **(M10) (b)** and nut **(a)** on rear RH cradle frame to torque.

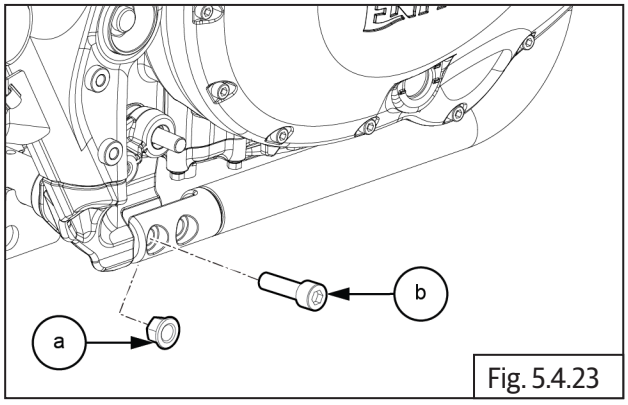

Fig. 5.4.23

	14 mm Socket with Ratchet 8 mm Allen socket with Ratchet
	43-47 Nm / 4.3 - 4.7 kgf-m

- Insert Hex head bolt long **(M10) (a)** with washer **(b)** into mounting holes on cradle frame RH top. .

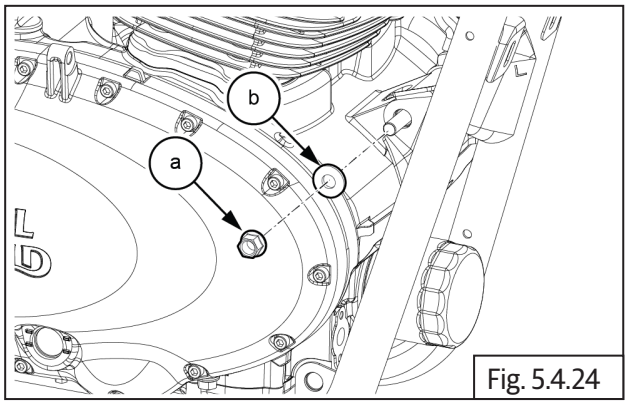

Fig. 5.4.24

	14 mm Socket with Ratchet
	43-47 Nm / 4.3 - 4.7 kgf-m

- Insert Hex head bolt small (M10) **(a)** along with washer **(c)** and nut **(b)** into bottom mounting hole on cradle frame front LH. .

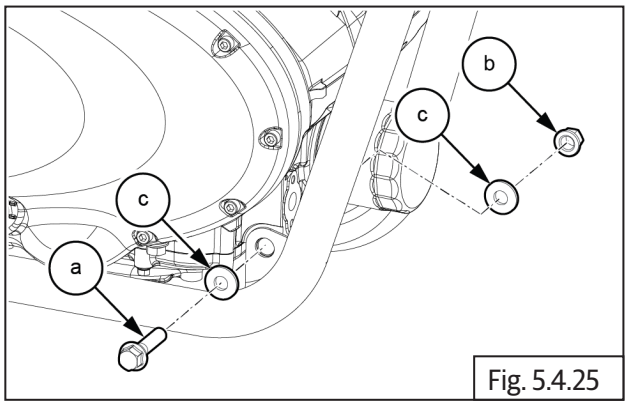

Fig. 5.4.25

	14 mm Socket with Ratchet
	43-47 Nm / 4.3 - 4.7 kgf-m

5.4.8. Engine Cylinder Head Steady Bracket

- Locate the steady brackets **(a)** into LH and RH frames **(b)**.

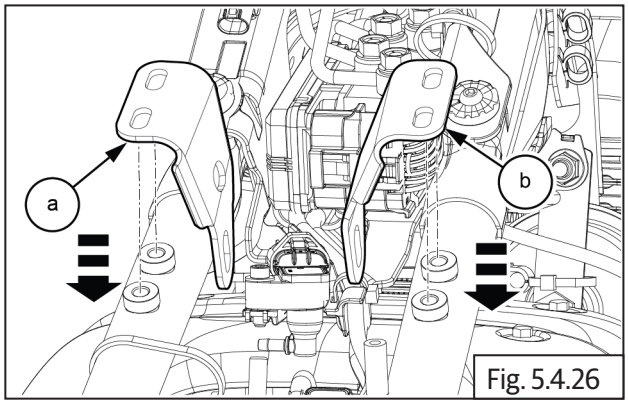

Fig. 5.4.26

- Locate and tighten 4 Nos. Hex bolts **(M8) (a)** on brackets holding main frame to torque.

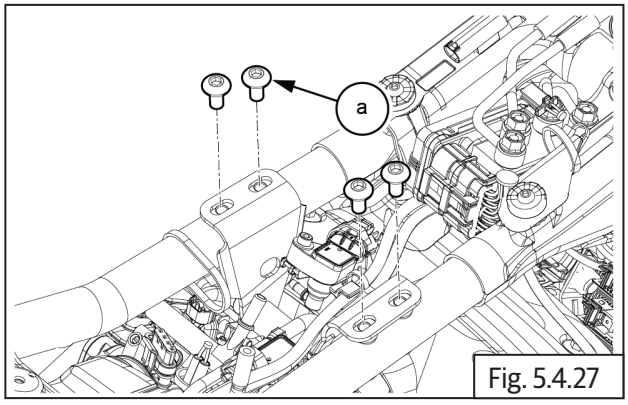

Fig. 5.4.27

	12 mm Socket with Ratchet
	23-27 Nm / 2.3 - 2.7 kgf-m

- Insert Hex socket bolt **(M10) (a)** from LH steady bracket into RH steady bracket.
- Hold LH Hex socket bolt with suitable tool.

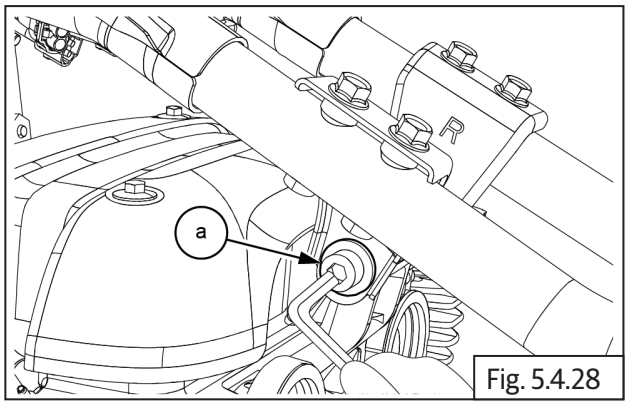

Fig. 5.4.28

	8 mm Allen socket with Ratchet
	43-47 Nm / 4.3 - 4.7 kgf-m

- Assemble washer and Hex nut **(M10) (a)** from RH and tighten nut to specified torque.

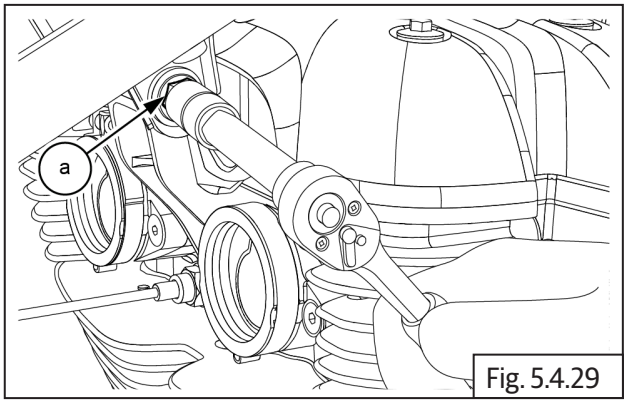

Fig. 5.4.29

	14 mm Socket with Ratchet
	43-47 Nm / 4.3 - 4.7 kgf-m

5.4.9. Main Frame to Engine Mounting Bolts

- Tighten lower rear crankcase mounting nut **(a)** to specified torque.

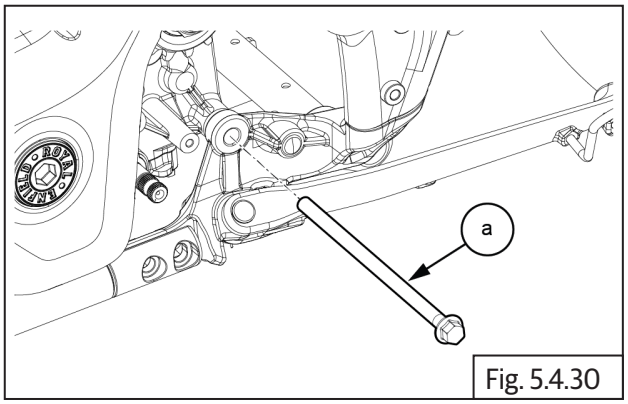

Fig. 5.4.30

	14 mm Socket with Ratchet
	45 N-m/4.5 kgf-m

- Tighten upper rear crankcase mounting nut **(a)** to specified torque.

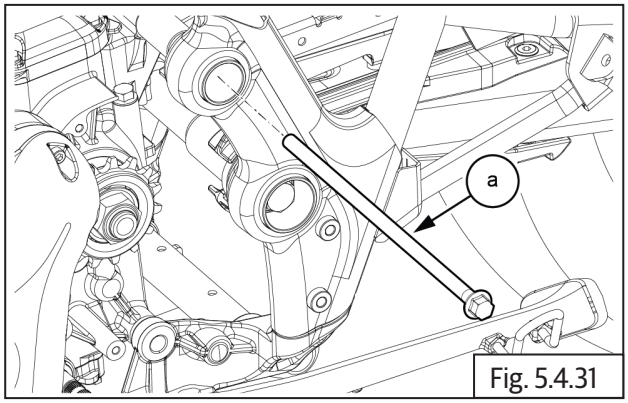

Fig. 5.4.31

	14 mm Socket with Ratchet
	43-47 Nm / 4.3 - 4.7 kgf-m

- Remove support from bottom of engine after ensuring all mounting fasteners to cradle frame and mainframe are correctly torqued to specifications.

5.4.10. Gear Position Indicator Sensor

- Connect gear position sensor **(a)** to connector **(b)** located behind engine.

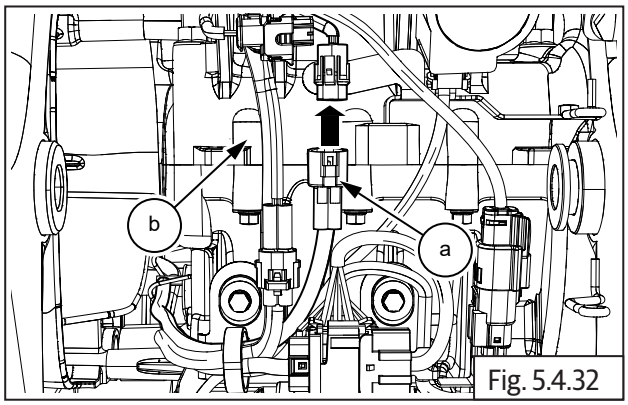

Fig. 5.4.32

5.4.11. Rear Chain to FD sprocket

- Loosen rear wheel mountings and chain adjusters and push rear wheel into swing arm to increase chain slack.
- Position rear chain over FD sprocket teeth properly.
- Assemble chain on FD sprocket **(a)**.

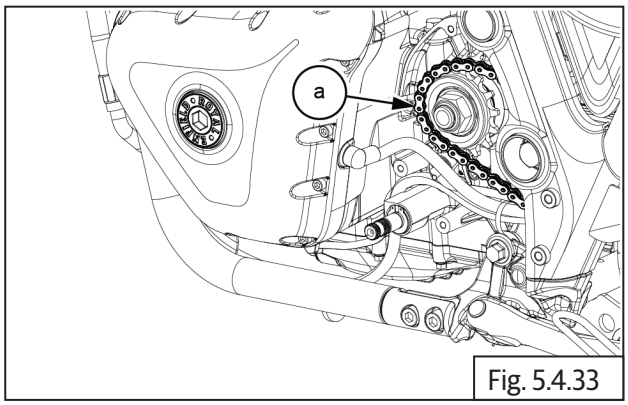

Fig. 5.4.33

- Adjust rear chain tension to specification: 20 mm to 30 mm.

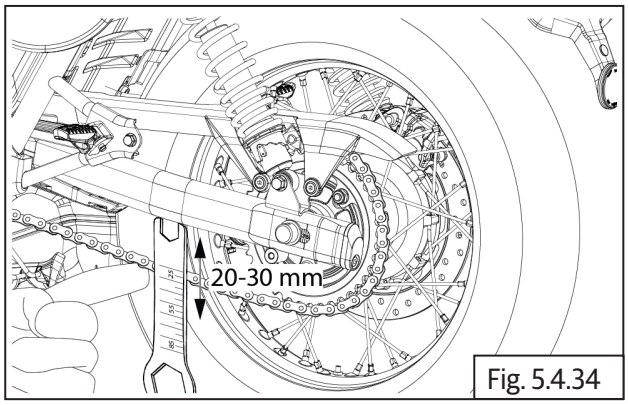

Fig. 5.4.34

- Tighten rear wheel axle nut, refer chapter (XXXXX).

5.4.12. FD Sprocket Cover

- Assemble FD sprocket cover **(a)** on crankcase LH.

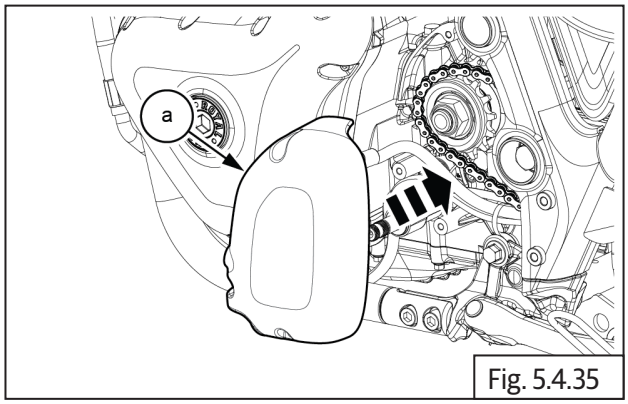

Fig. 5.4.35

- Locate 3 Nos. Hex socket head bolts **(M6) (a)** on FD sprocket cover and tighten in a crisscross pattern to specified torque.

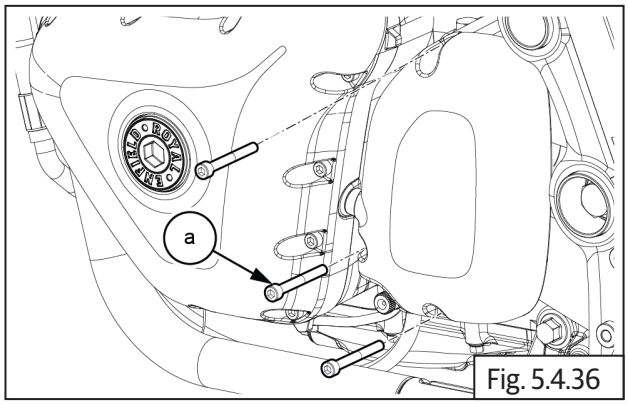

Fig. 5.4.36

	5 mm Allen socket with Ratchet
	10 N-m/1 kgf-m

5.4.13. Gear Shift Linkage

- Apply grease on bush **(b)** and pivot pin **(a)** .
- Install the gear shift pedal **(c)** along with the bush **(b)** onto the LH control plate **(d)** and secure it in place.
- Tighten the pivot pin **(a)** into the gear shift pedal.

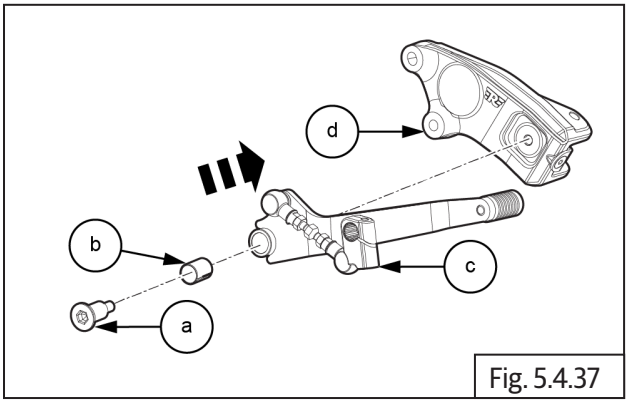

Fig. 5.4.37

	NLGI 2 / Mobil XHP 222

	8 mm Allen Socket with Ratchet
	21.75 - 28.75Nm / 2.21 - 2.93kgf-m

- Place the control plate with gear shifter assembly **(a)** onto the frame.

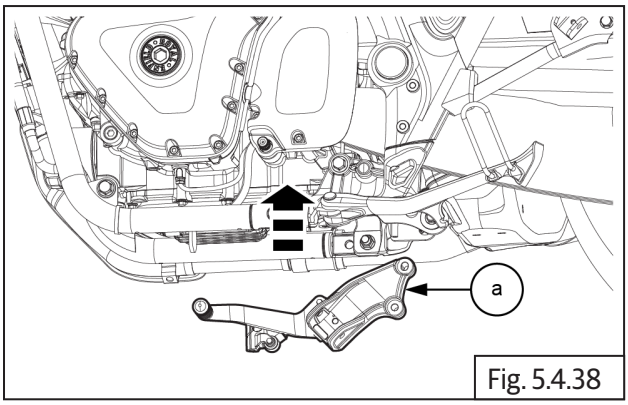

Fig. 5.4.38

- Secure the control plate to the frame by tightening the 2 Nos cap bolts **(M8) (a)**.

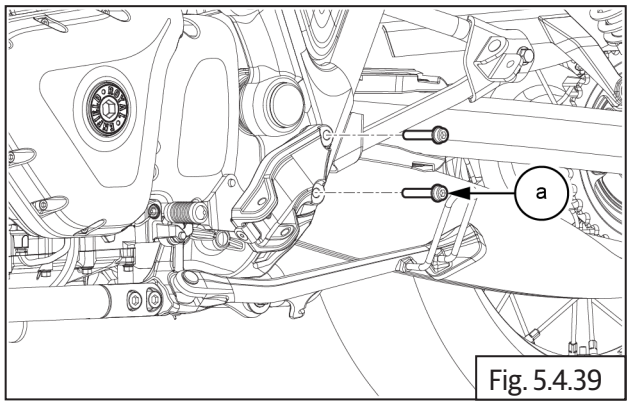

Fig. 5.4.39

	6 mm Allen Socket with Ratchet
	23 - 27Nm / 2.3 - 2.7kgf-m

- Slide the gear change clamp **(a)** onto the gear shift shaft

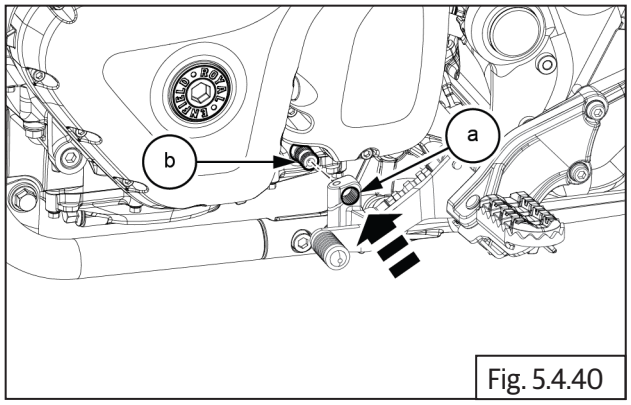

Fig. 5.4.40

- Make sure the punch mark in engine shaft must be inline with gear actuator shaft. refer below image.

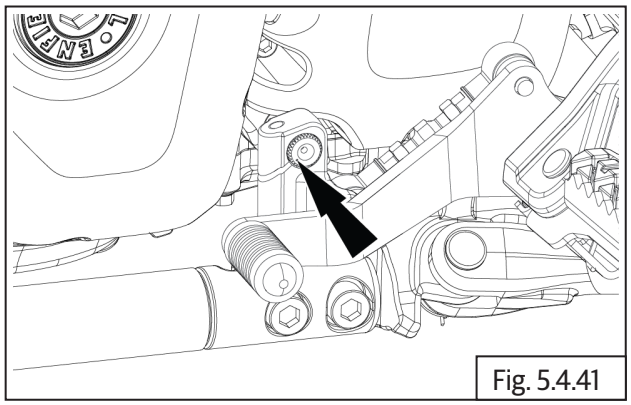
Fig. 5.4.41

- Secure the gear change clamp by tightening the Hex head flange bolt **(M6) (a)**.

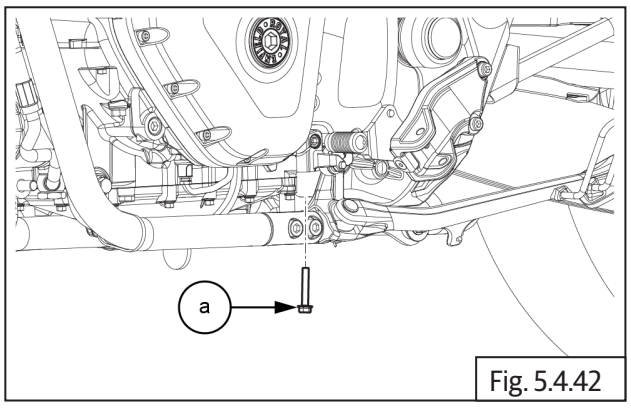

Fig. 5.4.42

	8 mm Socket with Ratchet/ Combination Spanner
	9 - 12Nm / 0.9 - 1.2kgf-m

5.4.14. Breather Hose Connection

Breather Hose Connection to Breather Box to Air Filter

- Insert the shorter end of hose **(a)** on the tube in breather box .
- Position the clip on hose correctly.

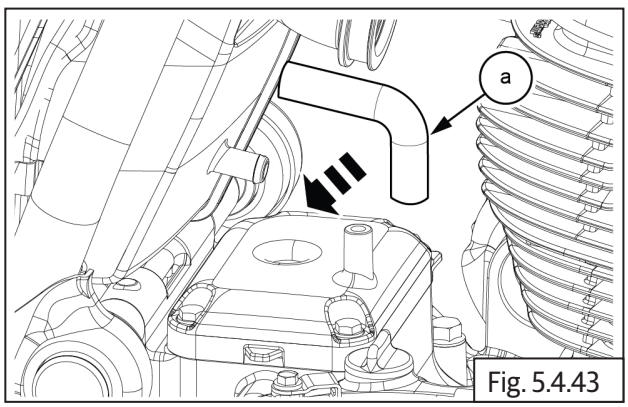

Fig. 5.4.43

	Nose plier

- Locate the other end of hose on the tube in air filter box and position the clip **(a)** over the breather hose correctly.

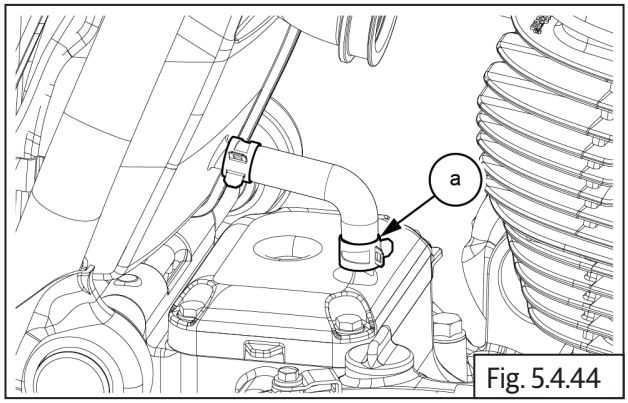

Fig. 5.4.44

	Nose plier

5.4.15. Spark Plug Suppressor Caps

Spark Plug Suppressor Caps on LH and RH Cylinder Heads

- Locate spark plug suppressor cap **(a)** on spark plug in LH cylinder head .

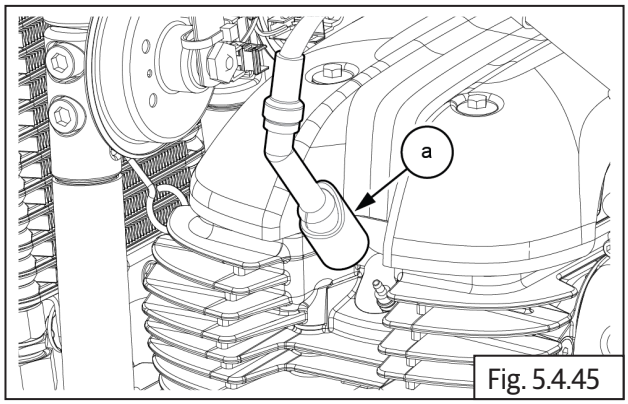

Fig. 5.4.45

- Locate spark plug suppressor cap **(a)** on spark plug in RH cylinder head .

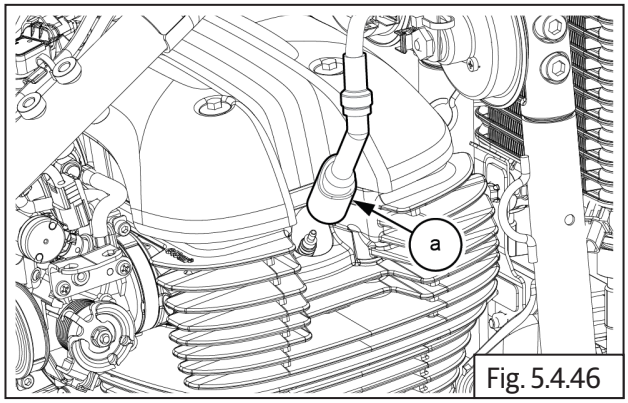

Fig. 5.4.46

5.4.16. Starter Motor Connections

- Connect starter motor negative (-) cable to terminal.
- Assemble spring washer and 2 Nos. Hex flange head bolts into terminal and tighten firmly.
- Slide protective cap over terminal on starter motor **(a)**.

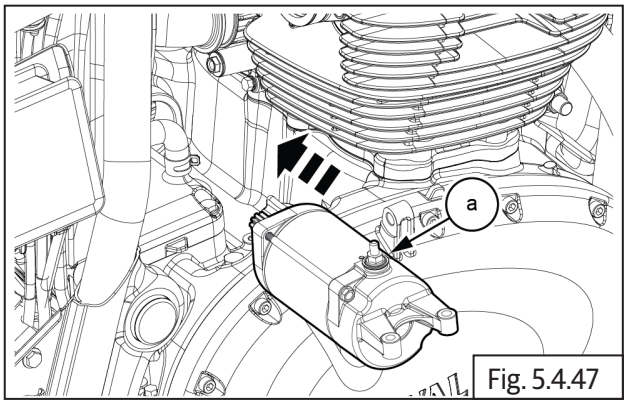

Fig. 5.4.47

	10 mm Socket with Ratchet
	12 N-m/1.2 kgf-m

- Connect positive (+) cable **(b)** to starter motor terminal. Assemble Hex bolt **(M6) (a)** and tighten firmly, duly ensuring the cable/terminal does not rotate.

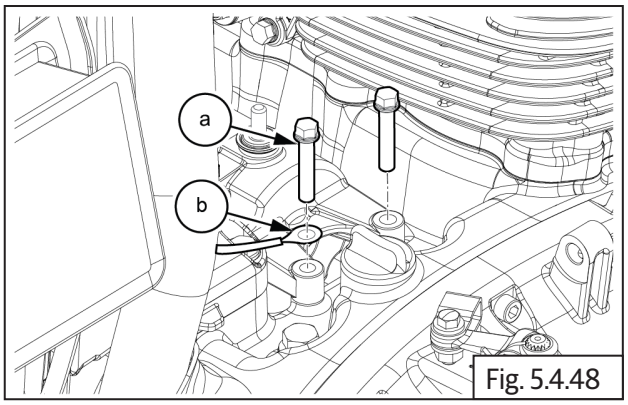

Fig. 5.4.48

	10 mm Socket with Ratchet
	12 N-m/1.2 kgf-m

- Locate and tighten Hex flange head bolt **(M6) (a)** to connect starter motor positive (+) terminal **(b)**

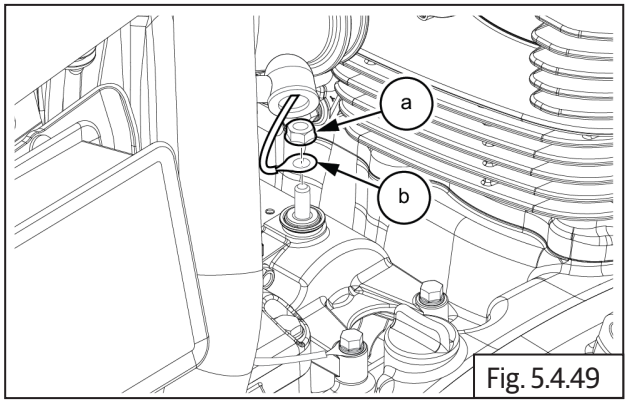

Fig. 5.4.49

	10 mm Socket with Ratchet
	10 N-m/1.0 kgf-m

5.4.17. Magneto/Side Stand Switch Connectors

- Connect magneto sensor connector **(a)** located on rear bottom of engine **(b)**.

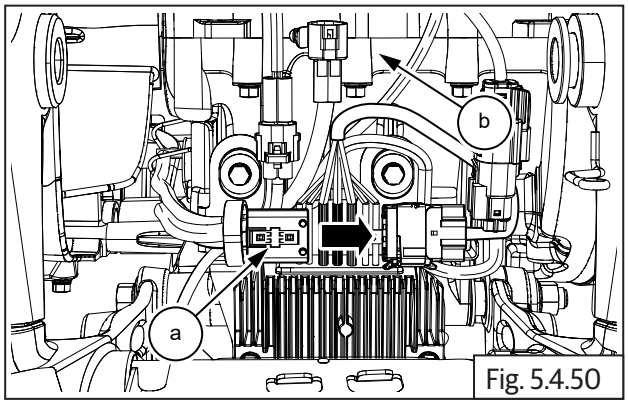

Fig. 5.4.50

- Connect side stand switch connector **(a)** located on rear top of engine **(b)**.

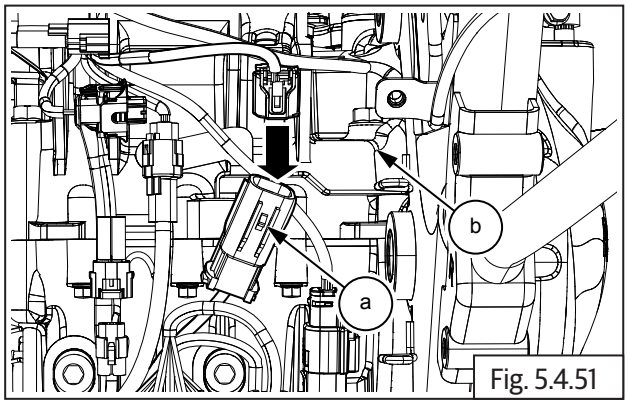

Fig. 5.4.51

5.4.18. Exhaust Pipe on Cylinder Head RH

- Locate new gaskets **(a)** into the LH and RH exhaust ports inside cylinder head. Ensure they are seated correctly.

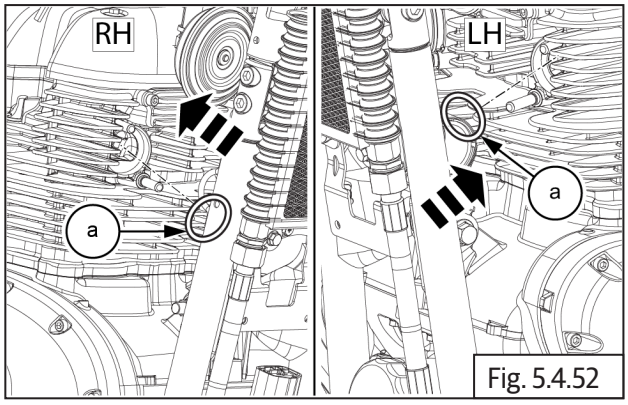

Fig. 5.4.52

- Locate exhaust pipe RH **(a)** into the exhaust manifold on cylinder head RH, duly ensuring flange mounting holes are located correctly on the studs in cylinder head.

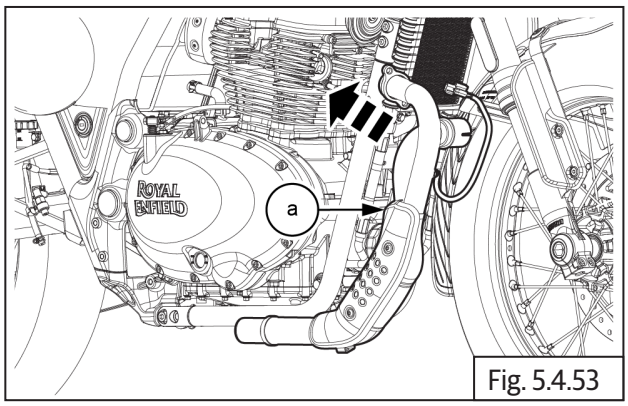

Fig. 5.4.53

- Ensure bracket on exhaust pipe bottom is aligned to mounting hole on frame on RH.
- Assemble 2 Nos. Hex nuts **(M8) (a)** on studs and tighten to specified torque.

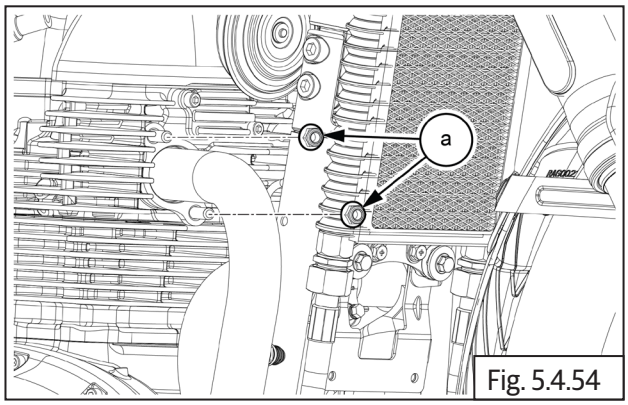

Fig. 5.4.54

	12 mm Socket with Ratchet
	25 N-m/2.5 kgf-m

- Assemble Hex flange head bolt **(M8) (a)** along with washer cup and **(c)** Hex nut **(M8) (b)** and tighten to specified torque.

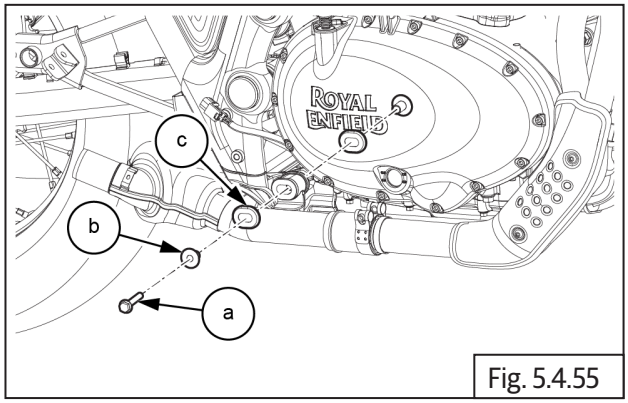

Fig. 5.4.55

	12 mm Socket with Ratchet
	25 N-m/2.5 kgf-m

5.4.19. Exhaust Pipe on Cylinder Head LH

- Locate new gaskets **(a)** into the LH exhaust port inside cylinder head. Ensure they are seated correctly.

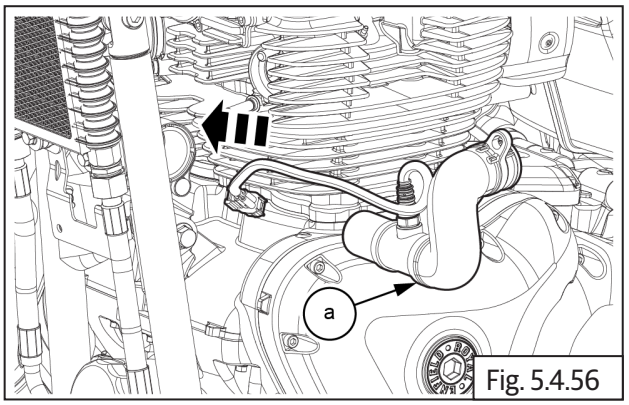

Fig. 5.4.56

- Tighten the hex flange bolt **(M8) (a)** on mounting clamp.

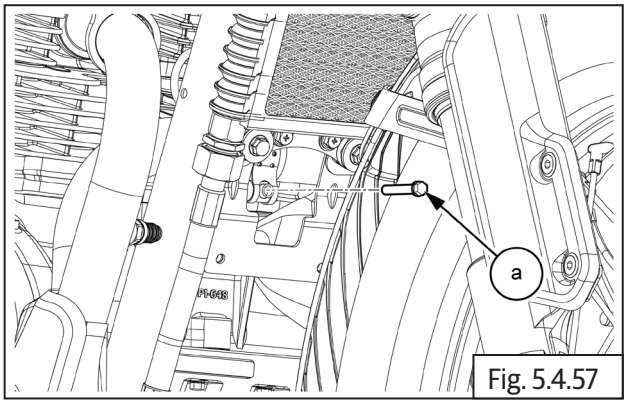

Fig. 5.4.57

- Assemble 2 Nos. Hex nuts **(M8) (a)** on the LH cylinder head top and bottom and tighten to specified torque.

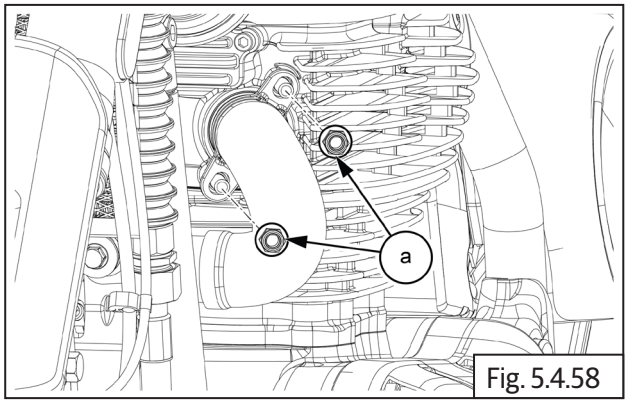

Fig. 5.4.58

	12 mm Socket with Ratchet
	25 N-m/2.5 kgf-m

- Insert the CAT box **(a)** back into position by gently pushing it inwards.

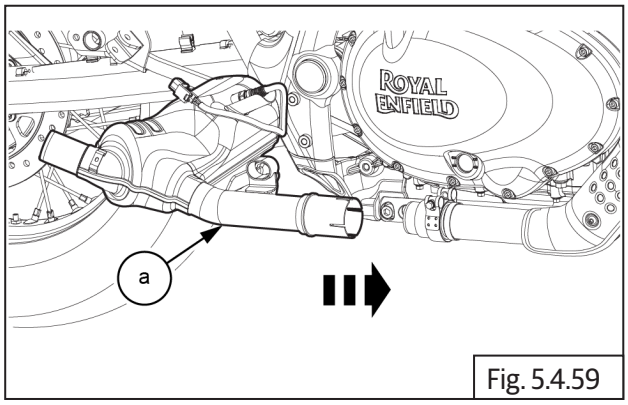

Fig. 5.4.59

	Mallet

- Install the mounting flanged hex bolt **(M8) (a)** along with **2 Nos** pins **(b)** and damper **(c)** onto the LHS CAT box.

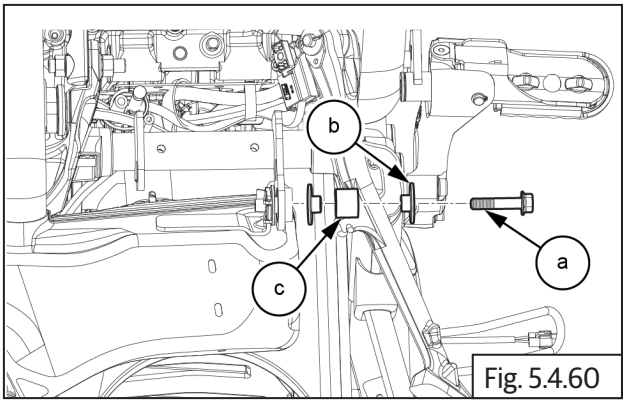

Fig. 5.4.60

	12 mm Socket with Ratchet
	30-34 N-m / 3.0 - 3.4 kgf-m

- Install the mounting flanged hex domed cap bolt **(M8) (a)** along with **2 Nos** pins **(b)** and washers **(c)** onto the RHS CAT box.

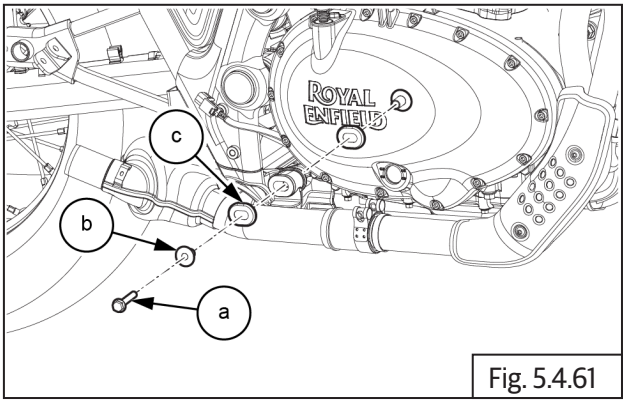

Fig. 5.4.61

	12 mm Socket with Ratchet
	21-29 N-m / 2.1 - 2.9 kgf-m

- Locate and tighten the **2 Nos** cap flange bolts **(M8) (a)** on the RHS control plate.

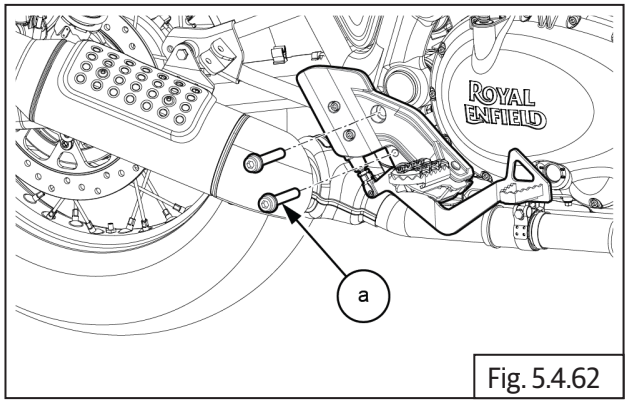

Fig. 5.4.62

	6 mm Allen Socket with Ratchet
	18-22 N-m / 1.8 - 2.2 kgf-m

- Locate and tighten the hex flange bolt **(M8) (a)** on the mounting clamp to secure the CAT box in place.

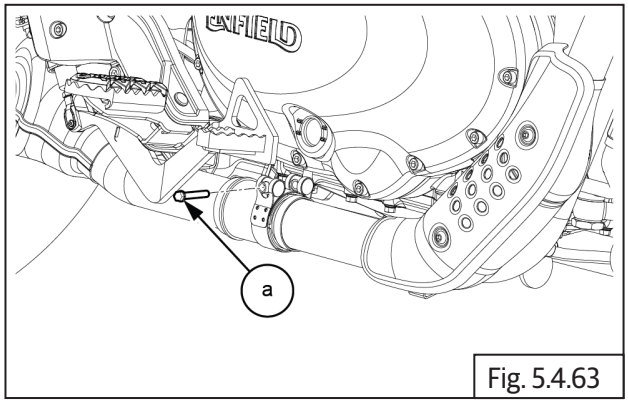

Fig. 5.4.63

	12 mm Socket with Ratchet
	30-34 N-m / 3.0 - 3.4 kgf-m

5.4.20. Silencer

- Insert the new gasket **(a)** onto the silencer.

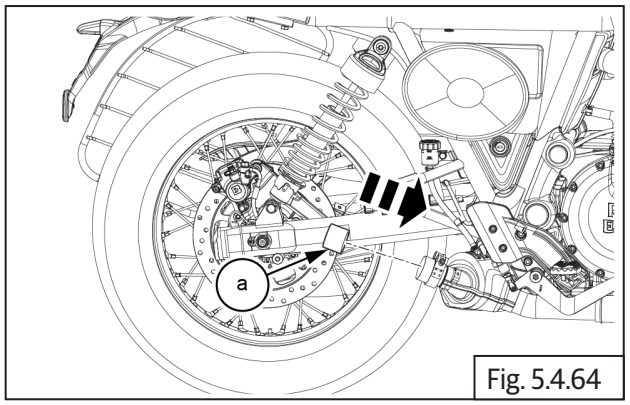

Fig. 5.4.64

- Insert the silencer **(a)** back into position by gently pushing it inwards.

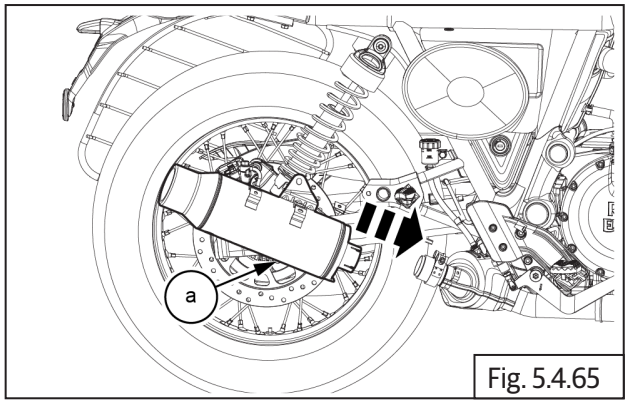

Fig. 5.4.65

	Mallet

- Locate and tighten the flanged hex domed cap bolt **(M8) (a)** and flange U nut **(M8) (d)** along with **2 Nos** pins **(b)** and **2 Nos** dampers **(c)** to secure the silencer.

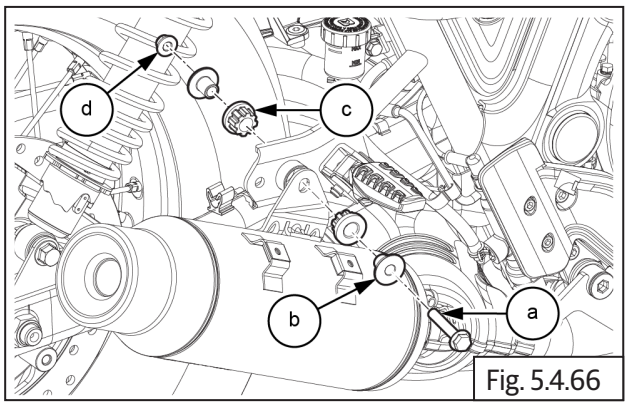

Fig. 5.4.66

	12 mm Socket with Ratchet
	21-29 N-m / 2.1 - 2.9 kgf-m

- Tighten the hex flange bolt **(M8) (a)** on mounting clamp.

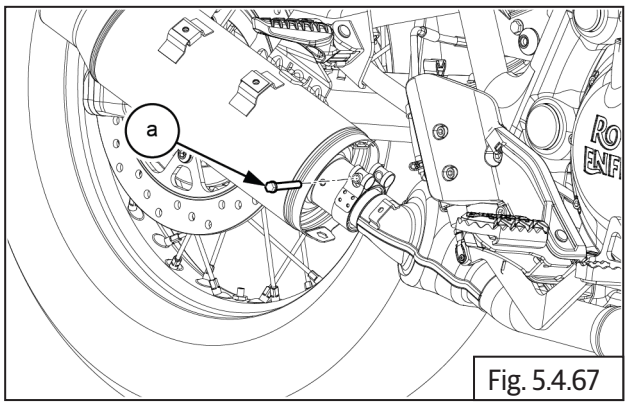

Fig. 5.4.67

	12 mm Socket with Ratchet
	30-34 N-m / 3.0 - 3.4 kgf-m

- Fix the **2Nos** clip nuts **(a)**on silencer.

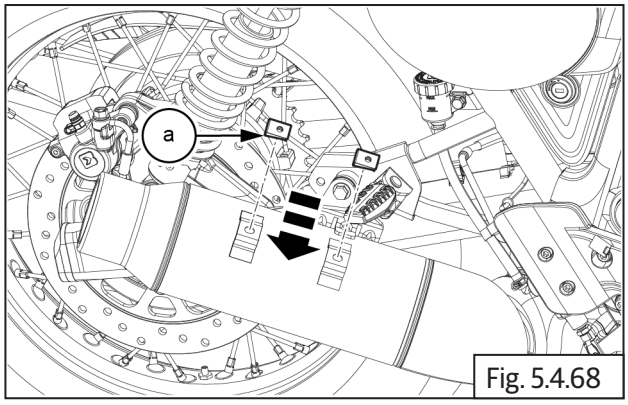

Fig. 5.4.68

- Locate the Silencer guard **(a)** silencer.

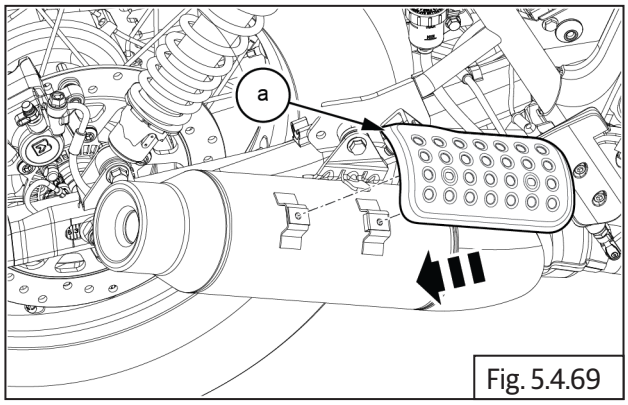

Fig. 5.4.69

- Locate and tighten 2Nos bolt **(a)** on silencer.

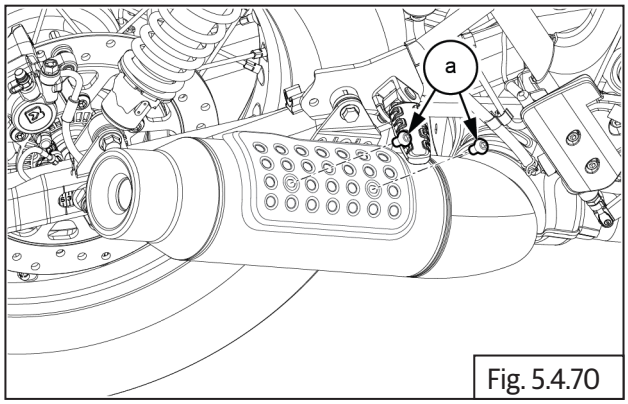

Fig. 5.4.70

5.4.21. Hego Sensor / Oxygen Sensor Connectors

- Connect the CAT box Oxygen Sensor coupler **(a)**.

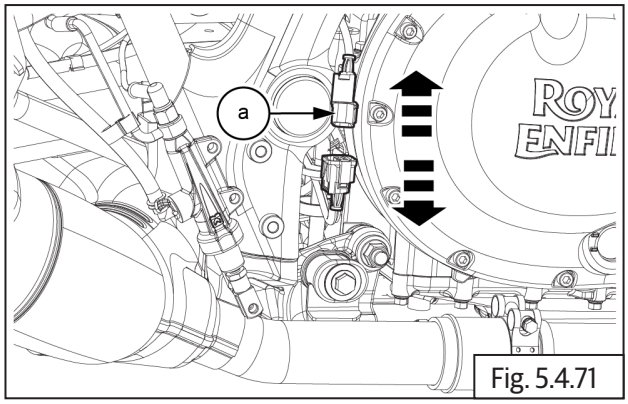

Fig. 5.4.71

- Connect the Oxygen Sensor sensor connectors **(a)** to both LHS and RHS on the front side of the engine.

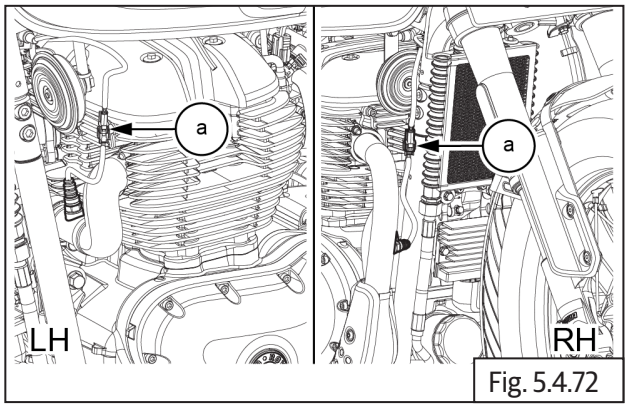

Fig. 5.4.72

- Fix the omega clips **2Nos (a)** to the LHS and RHS Oxygen Sensor wiring harness.

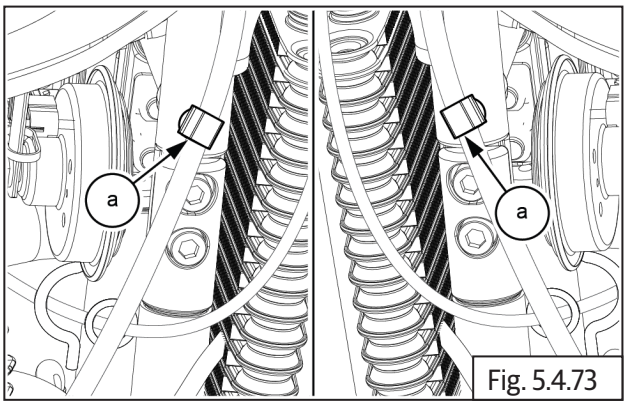

Fig. 5.4.73

- Connect the battery terminals. (Refer_____).

5.4.22. Throttle Body

- Ensure clips **(a)** are in position on inlet manifolds and loosened sufficiently.
- Locate throttle body **(b)** on the inlet manifold rubber flanges **(c)** and ensure it is properly seated on both LH and RH inlet manifolds.

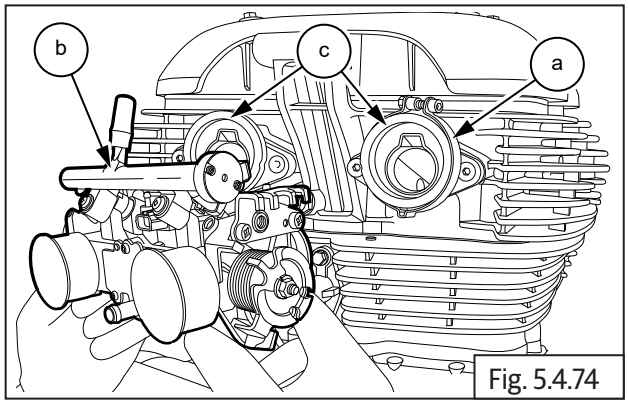

Fig. 5.4.74

- Tighten both clips **(a)** sufficiently over inlet manifold.
- Ensure clips are in position on air filter hoses and loosened sufficiently.
- Locate air filter housing **(b)** on throttle body **(c)** and ensure it is properly seated on both LH and RH of throttle body.

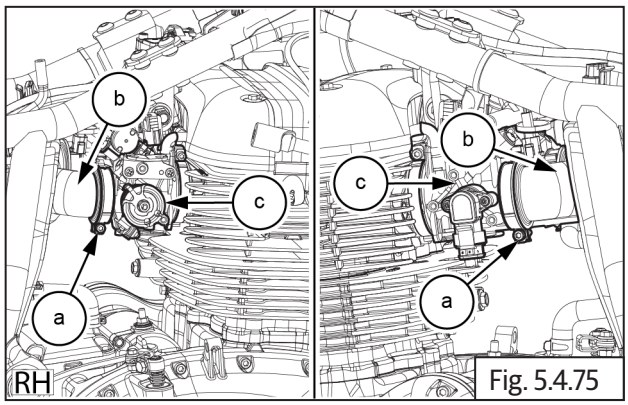

Fig. 5.4.75

- Tighten both clips **(a)** sufficiently over air filter hose.

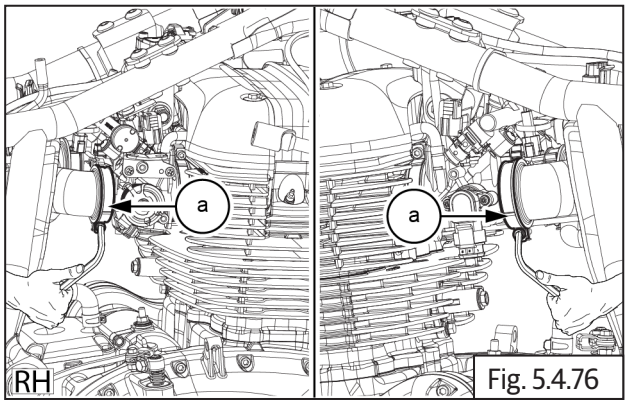

Fig. 5.4.76

5.4.23. Air Filter Housing to Throttle Body

- Tighten worm clips screws **(M4) (a)** from air filter housing **(b)** to throttle body **(c)** on both LH and RH sides.

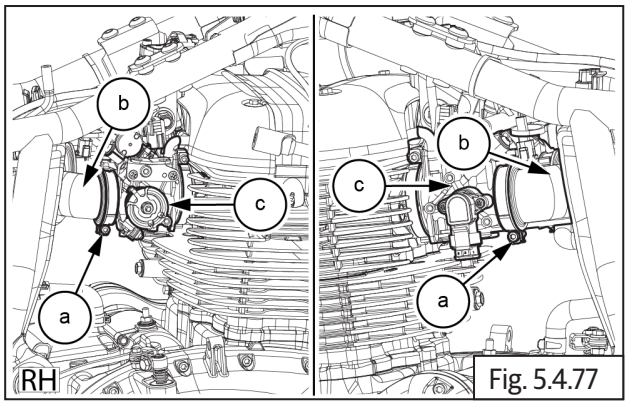

Fig. 5.4.77

	5mm Allen socket with Ratchet

	5mm Allen socket with Ratchet
	2-3 N-m/0.2-0.3 kgf-m

5.4.24. Injector, TPS and Map Connections

- Connect the LH and RH injector connectors **(a)** located on throttle body **(b)**.

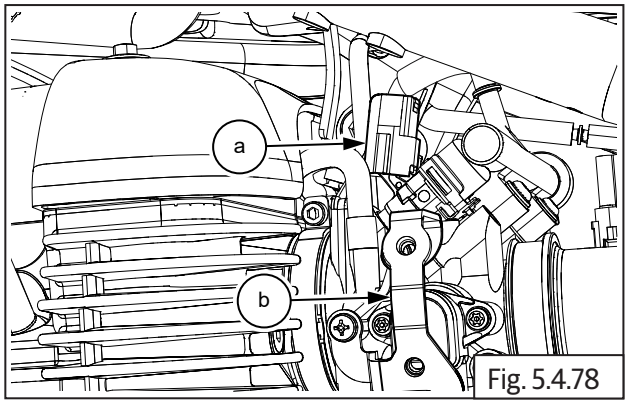

Fig. 5.4.78

- Connect TPS sensor connector **(a)** to sensor at bottom of throttle body.

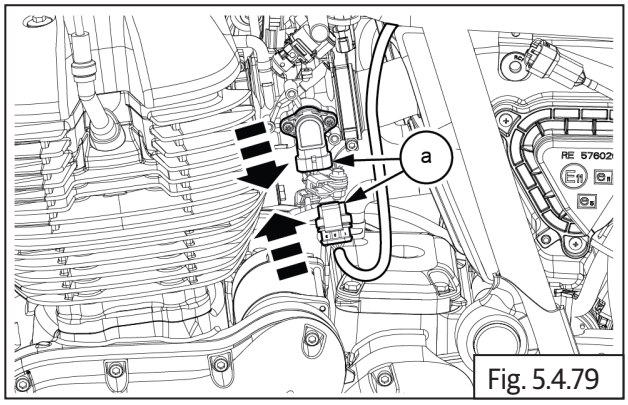

Fig. 5.4.79

- Connect idle speed sensor connector **(a)**.

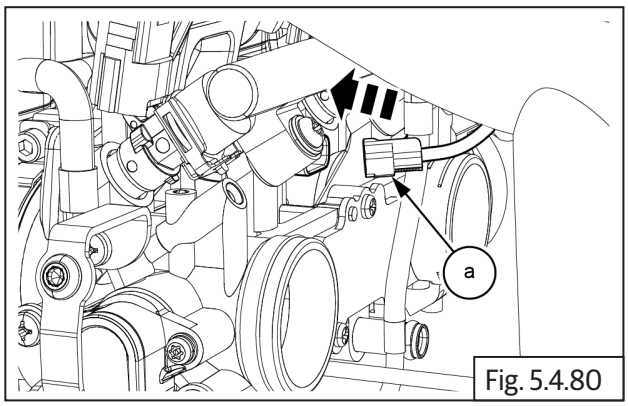

Fig. 5.4.80

- Connect idle EVAP hoses **(a)** into throttle body.

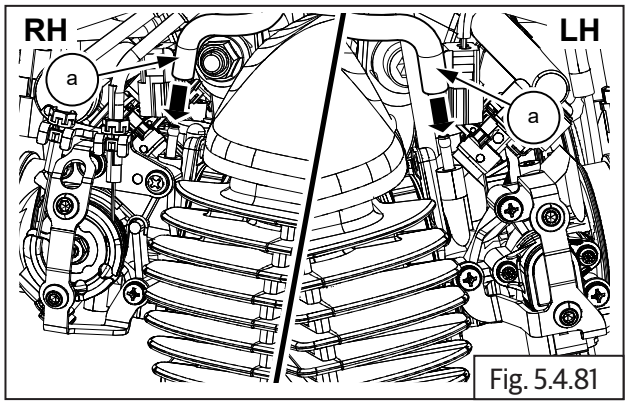

Fig. 5.4.81

5.4.25. Throttle Cables

- Loosen bottom adjuster nuts **(a)** fully from adjusters in inner and outer throttle cables.
- Ensure top adjuster **(b)** nuts are fully threaded into adjusters.
- Slide inner cables into slots in throttle bracket and push adjusters completely into throttle bracket till outer lock nuts are resting against bracket.

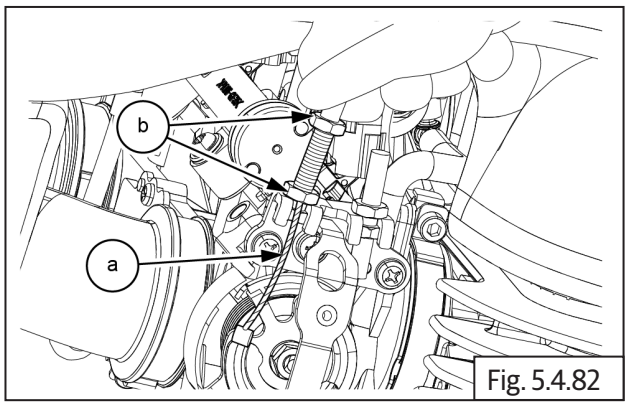

Fig. 5.4.82

- Route throttle cable inner in throttle rotor and position throttle cable end **(a)** in eyelet in throttle rotor **(b)** correctly.

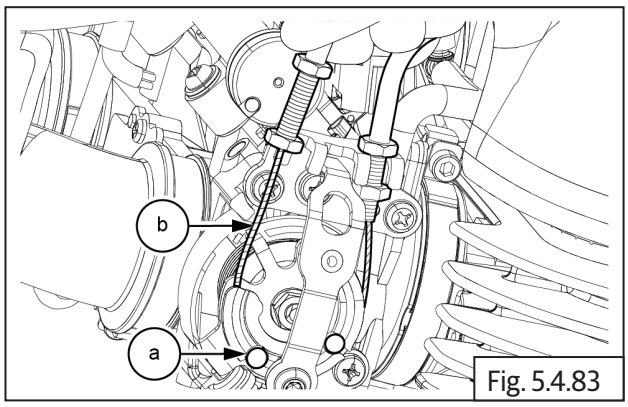

Fig. 5.4.83

- Assemble outer lock nut **(a)** on adjuster in throttle body **(b)**.
- Adjust throttle cable **(c)** free play as specified and tighten 2 Nos. lock nuts on throttle cable adjuster against bracket.

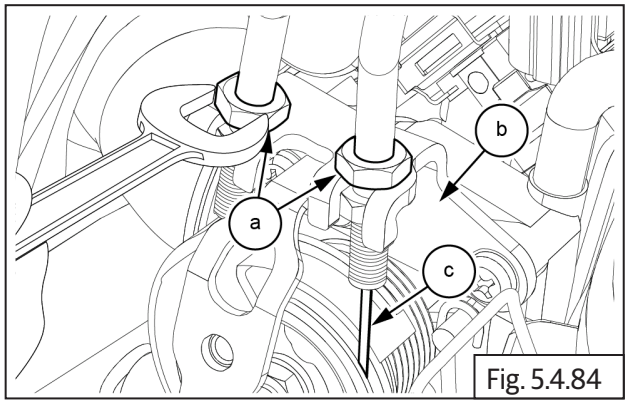

Fig. 5.4.84

	12 mm Double end spanner

5.4.26. Throttle Body Covers on LH and RH

- Locate throttle body covers on both LH and RH of throttle body.
- Insert and tighten 2 Nos. Hex socket head bolts **(M5) (a)** into LH and RH throttle body cover **(b)**.

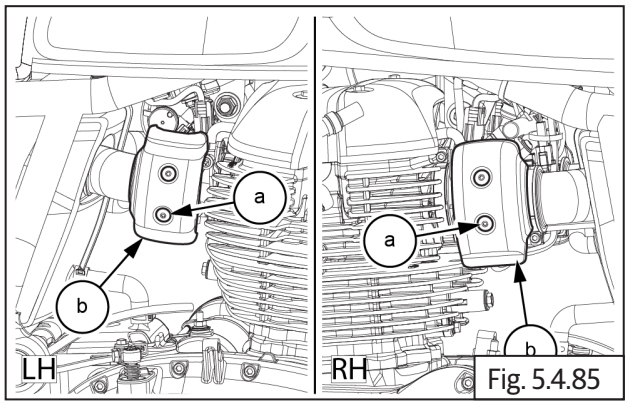

Fig. 5.4.85

	4 mm Allen socket with Ratchet
	2-3 Nm / 0.2 - 0.3 kgf-m

5.4.27. Fuel Tank

- Locate and slide the fuel tank into front frame guides **(a)**.

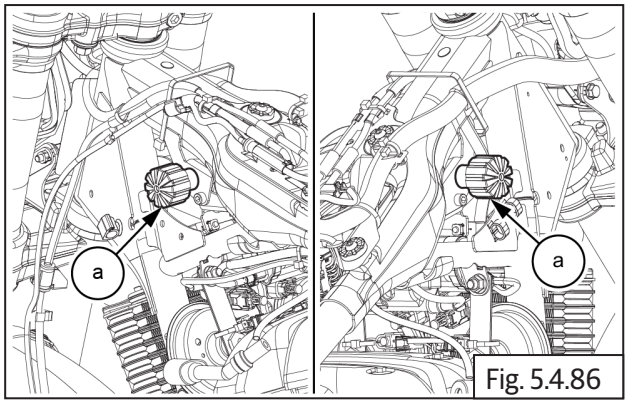

Fig. 5.4.86

5.4.28. EVAP to Fuel Tank Connections

- Connect drain connection hose **(a)** to fuel tank **(b)**.

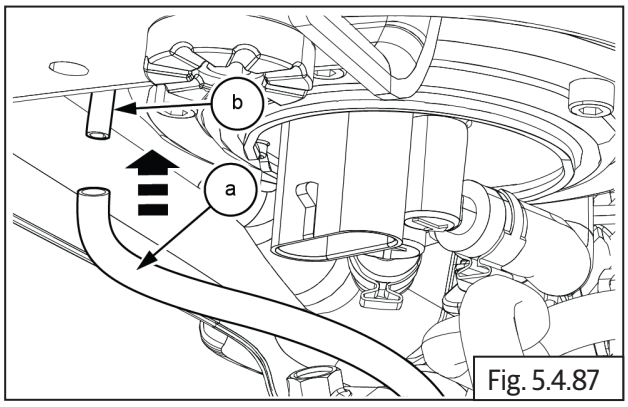

Fig. 5.4.87

- Connect the EVAP connection hose **(a)** to the fuel tank.

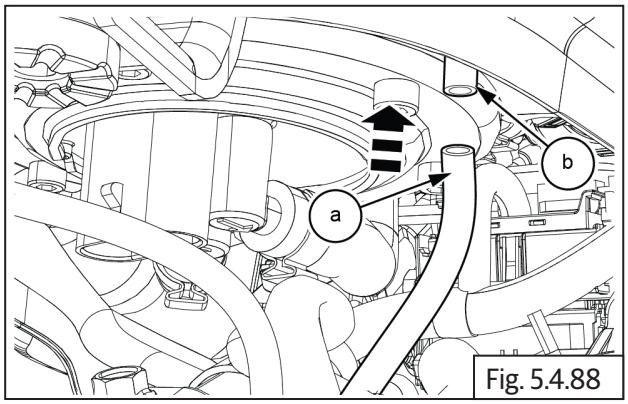

Fig. 5.4.88

5.4.29. Fuel Hose (Fuel Pump to Injector)

- Connect fuel feed hose quick connector **(a)** (fuel pump to injector rail).

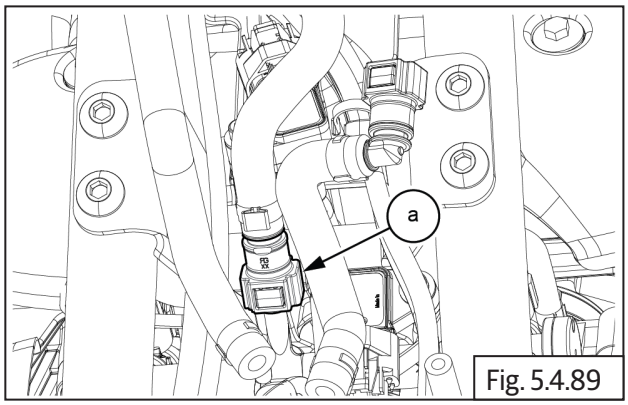

Fig. 5.4.89

NOTE
• *Ensure fuel quick coupler is locked properly. (There should be a "Click" sound when locked)*

5.4.30. Fuel Level Sensor and Fuel Pump

Fuel Level Sensor and Fuel Pump Connectors

- Connect fuel level sensor connectors **(a)** in fuel tank.

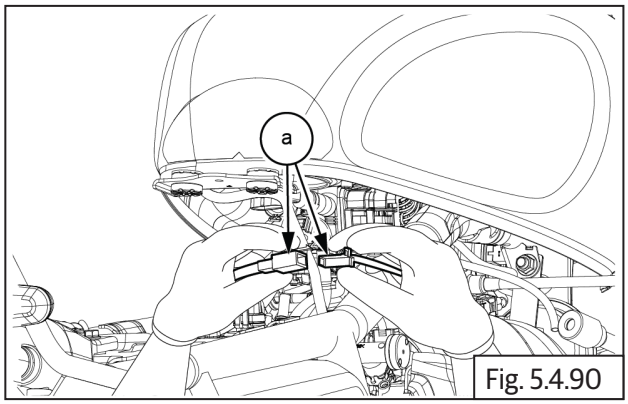

Fig. 5.4.90

- Connect the fuel pump connector **(b)** into the fuel tank **(a)**.

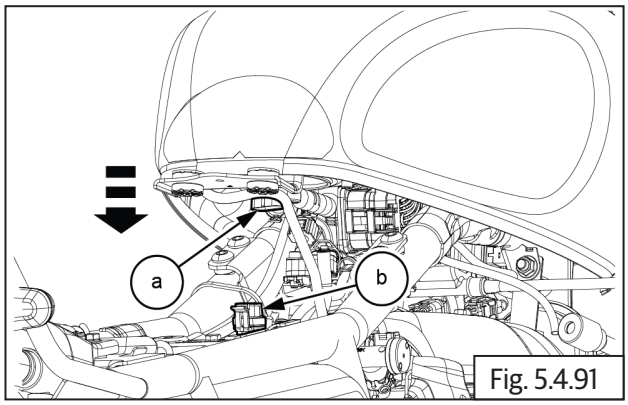

Fig. 5.4.91

- Tighten with 2 Nos. Hex head bolts **(M6) (a)** into fuel tank **(b)** on frame.

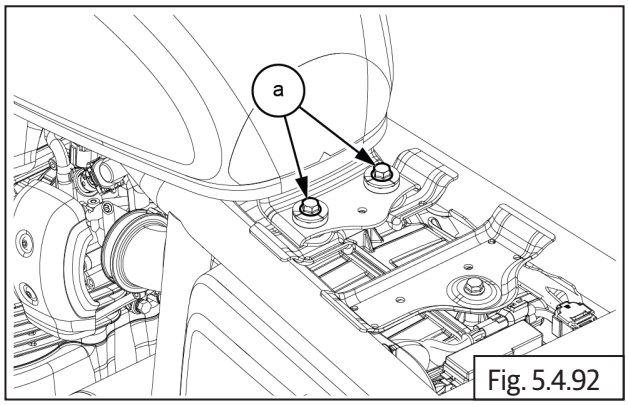

Fig. 5.4.92

	10 mm Socket with Ratchet
	10 N-m/1 kgf-m

5.4.31. Clutch Cable

NOTE
• *Ensure clutch cable is properly routed and retained by all necessary clips.*

- Locate lower end of clutch cable **(a)** into guide **(b)**.

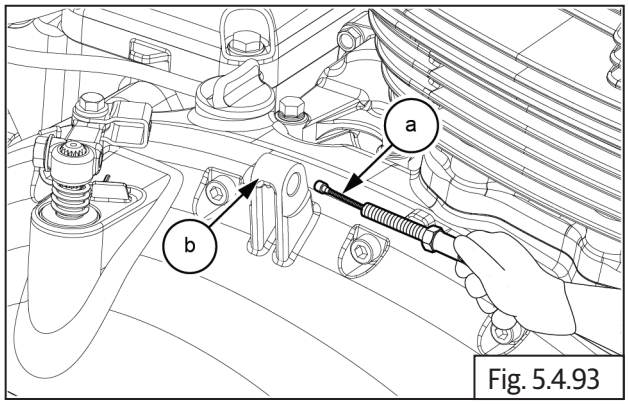

Fig. 5.4.93

- Install outer lock Hex nut **(M8) (a)**.

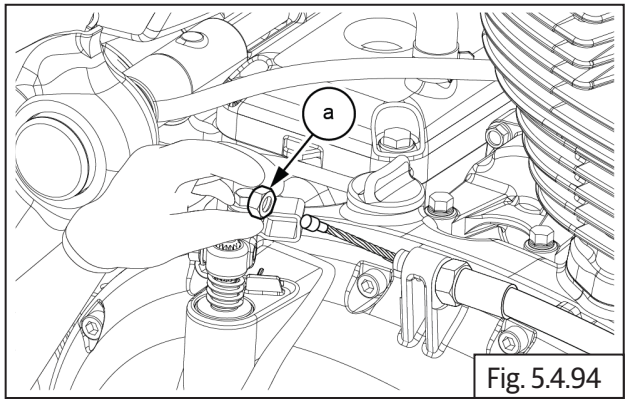

Fig. 5.4.94

- Install rubber grommet **(a)** on inner clutch cable **(b)**.

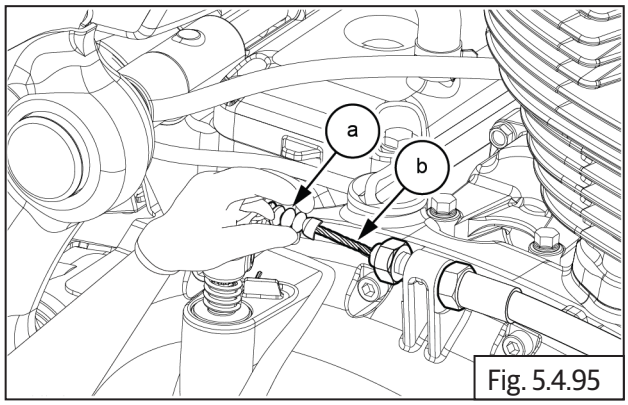

Fig. 5.4.95

- Release inner cable **(a)** on clevis on clutch actuating assembly **(b)** and push rod **(c)**.

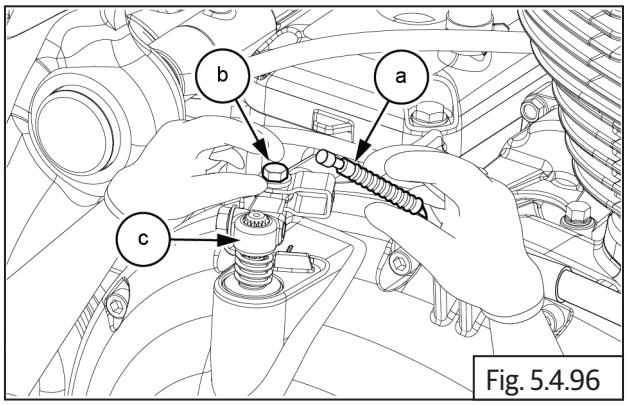

Fig. 5.4.96

- Tighten inner locknut **(M8) (a)** fully and pull adjuster from housing cable guide.

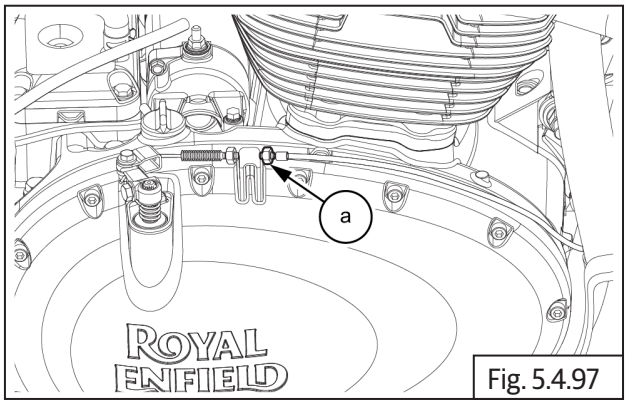

Fig. 5.4.97

	12 mm Double end spanner

- Tighten outer lock nut **(M8) (a)**.

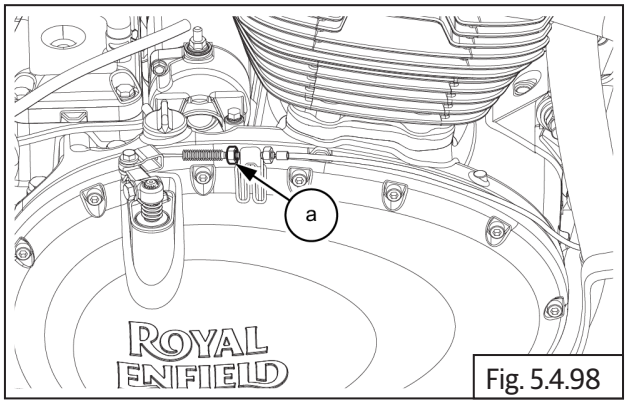

Fig. 5.4.98

	12mm Combination Spanner
	6 Nm / 0.6 kgf-m

5.4.32. Battery Connections

NOTE
• *Ensure ignition and stop switches are in OFF position before connecting battery cables.*

- For the precautions and procedures to remove and install cables refer General Information (section 1.5.8).
- Locate and tighten Hex head bolt **(M6) (a)** to disconnect negative (-) terminal from battery **(b).**

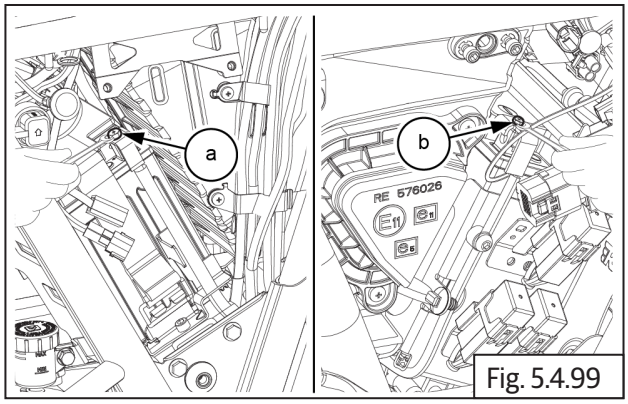

Fig. 5.4.99

	10 mm Double end spanner
	3-4Nm / 0.3 - 0.4kgf-m

5.4.33. Seat Assembly

- Locate seat **(a)** into seat bracket properly and gently push to lock.

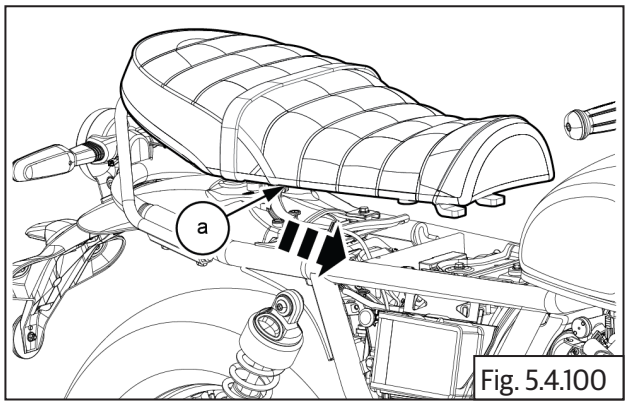

Fig. 5.4.100

5.4.34. Side Panel LH and RH

- Slide LH panel **(a)** from bottom to fit into frame.

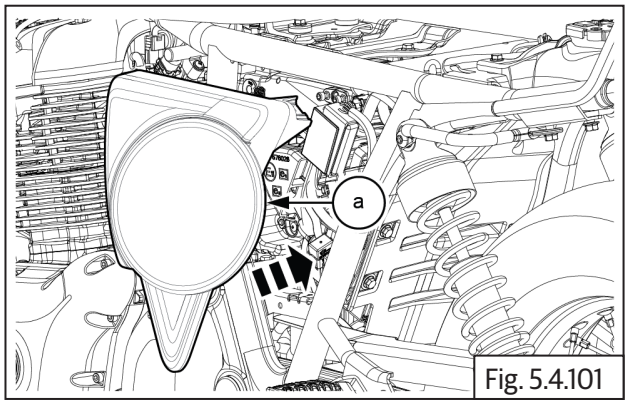

Fig. 5.4.101

- Tighten and secure button head bolts **(M5) (a)** on LH side panel.

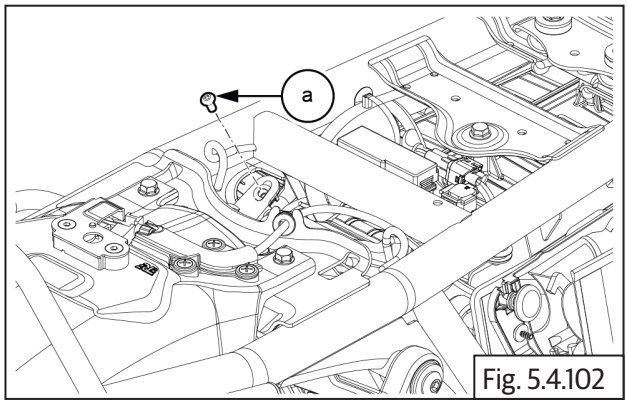

Fig. 5.4.102

	4mm Allen socket with Ratchet
	2 - 3 Nm / 0.2 - 0.3 kgf-m

5.4.35. Oil Filter

- Locate and tighten oil filter **(a)** using special tool **(b)**.

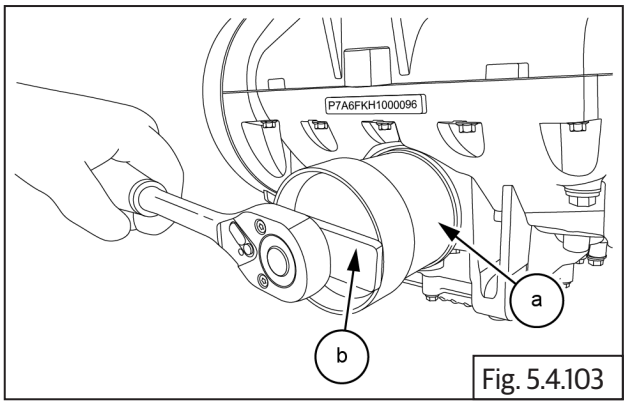

Fig. 5.4.103

SPL 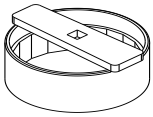	Part No: ST30294/a
	Part Name: Oil filter wrench with Ratchet
	20 N-m/2 kgf-m

5.4.36. Oil Cooler Mountings to Frame

- Locate and tighten 2Nos bolt **(a)** on oil cooler frame.

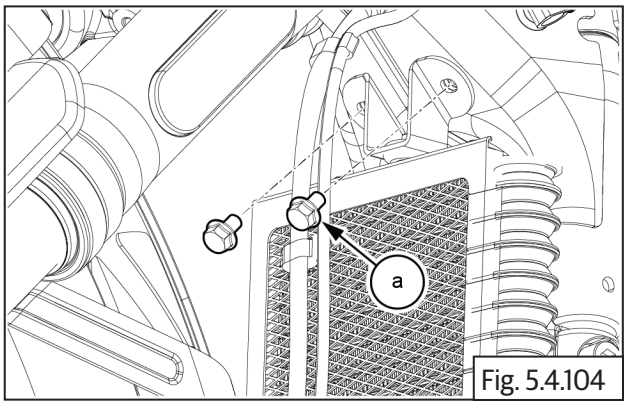

Fig. 5.4.104

	10mm socket with Ratchet
	8 - 12 Nm / 0.8 - 1.2 kgf-m

- Locate and tighten 2 Nos. Hex flange head bolts **(M6) (a)** along with washer **(b)** and rubber **(c)** on oil cooler

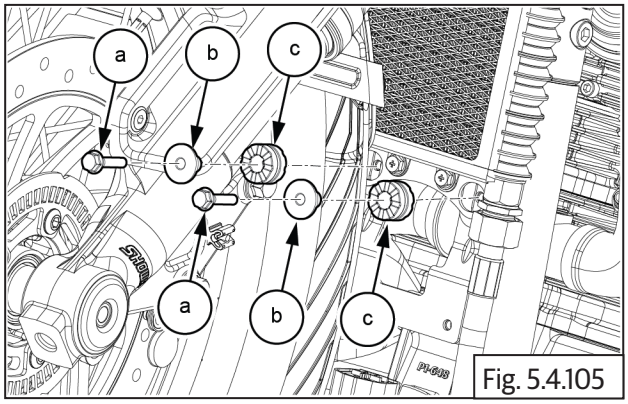

Fig. 5.4.105

	10mm socket with Ratchet
	8 - 12 Nm / 0.8 - 1.2 kgf-m

5.4.37. Oil Cooler Inlet and Outlet Pipes

Oil Cooler Inlet and Outlet Pipes to Engine

- Insert bolt union crankcase **(M16) (b)** along with washers **(a)** and tighten to specified torque.

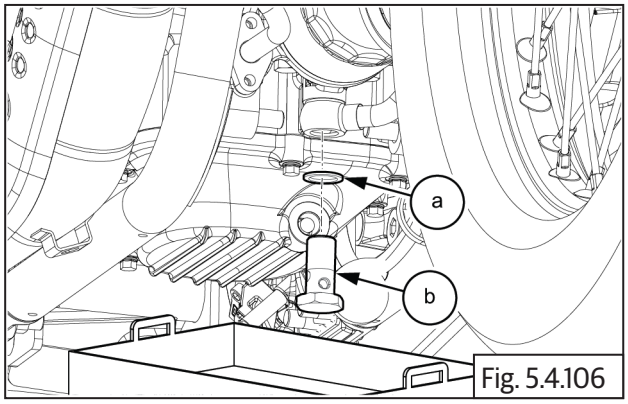

Fig. 5.4.106

	24 mm Socket with Ratchet
	45 N-m/4.5 kgf-m

- Tighten bolt **(M18) (a)** on oil cooler hose **(b)** by supporting **(M16) (c)** bolt on top.

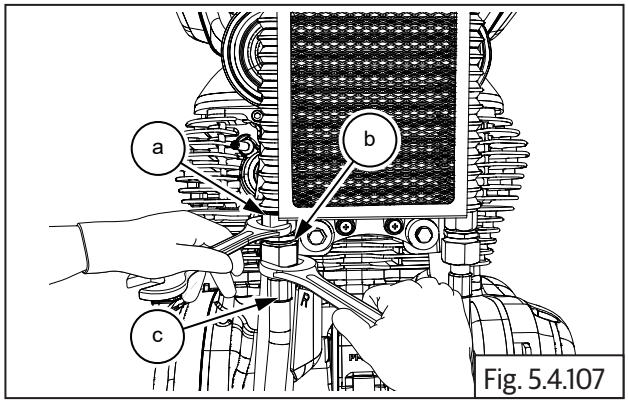

Fig. 5.4.107

	24 mm and 27 mm Combination Spanner
	40 N-m/4.0 kgf-m

- Tighten oil cooler inlet pipe with 2 Nos. Hex socket screws **(M6) (a)**.

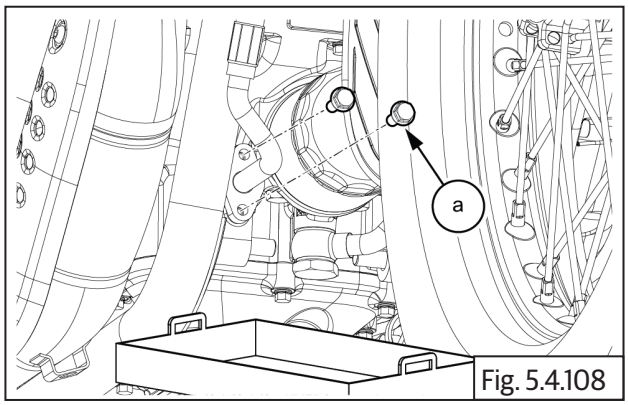

Fig. 5.4.108

	5 mm Allen socket with Ratchet and Torque wrench
	12 N-m/1.2 kgf-m

5.4.38. Drain Bolt and Engine Oil Re-fill

- Place a container **(a)** under engine oil drain bolt **(b)**.
- Insert and tighten drain bolt **(b)** along with washer **(c)**.

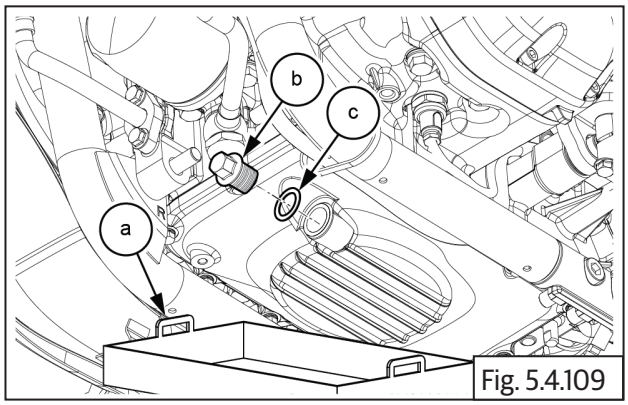

Fig. 5.4.109

Dry Fill	3.9 Liters / 1.03 Imperial gallon
Grade	10W-50 TO API SL (OR HIGHER) JASO MA2, SUCH AS ELF MOTO4 TECH 10W 50 (FULLY SYNTHETIC)

	13 mm Socket with Ratchet
	33-37 N-m/3.3-3.7 kgf-m

- Refill engine oil with recommended quantity, for more information, refer the Technical Specification chapter.
- Assemble engine oil filler cap **(a)**.

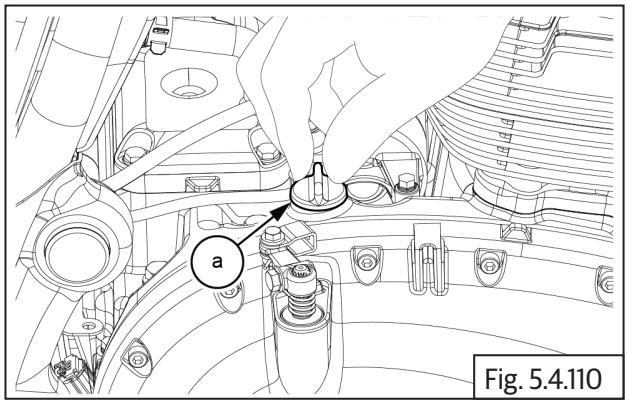

Fig. 5.4.110

- Start and warm up engine for 2 to 3 minutes and then turn it off.
- Check oil level through oil level window.

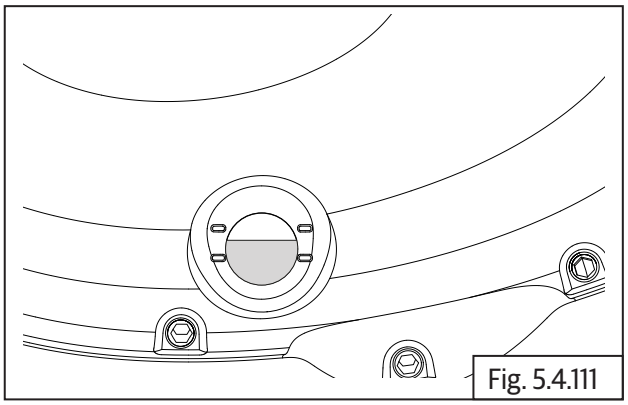
Fig. 5.4.111

5.4.39. Oil Pressure Checking Procedure

- Stand the vehicle on a level surface
- Remove the NPT plug **(a)**- Crankcase Lower LH side

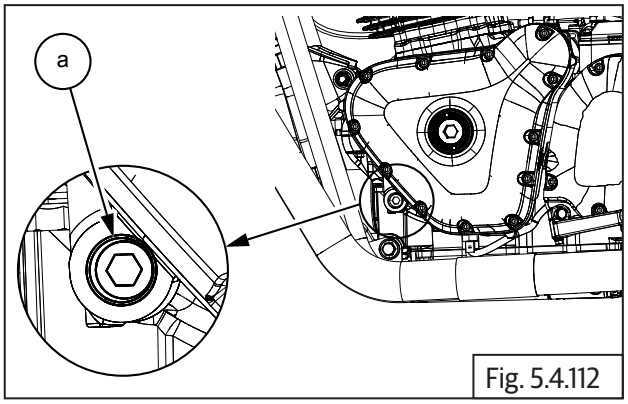

Fig. 5.4.112

- Install the oil pressure adapter **(a)** & pressure gauge **(b).**

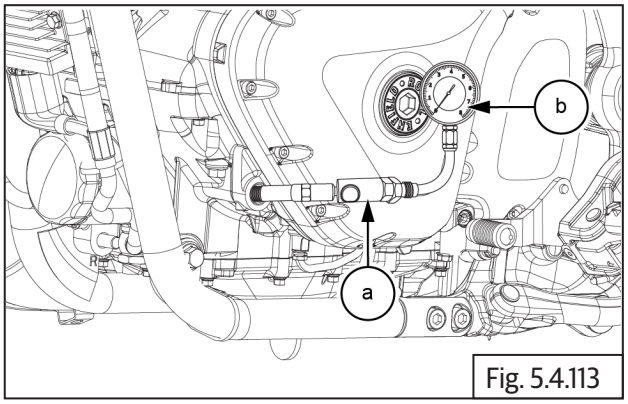

Fig. 5.4.113

- Oil temperature to be checked from EOT sensor
- Oil Pressure Value to be **4.5 (+ or -) 0.5 Bar @4000RPM** and **80°C** at **EOT sensor**
- Stop the engine and remove the oil pressure gauge and adapter

NOTE
• Apply Loctite 5910 to the NPT plug before installation.

ENGINE DISMANTLING

CONTENTS **PAGE**

5.5 Engine Dismantling 191

5.5.1. Drain Plug 191

5.5.2. Oil Filter 192

5.5.3. Inlet Manifold Rubber Flange 192

5.5.4. Starter Motor 192

5.5.5. Breather Hose 193

5.5.6. Breather Box Cover 193

5.5.7. Spark Plugs 193

5.5.8. Clutch Actuating Lever Assembly 194

5.5.9. Clutch Cover 194

5.5.10. Clutch Actuating Shaft 195

5.5.11. Oil Level Window 196

5.5.12. Clutch Plates 196

5.5.13. Oil Pump 198

5.5.14. Gear Shifter Shaft 199

5.5.15. Star Index Stopper 201

5.5.16. Star Index 201

5.5.17. Reed Valves 201

5.5.18. Cylinder Head Cover 202

5.5.19. Crankshaft Plug on Magneto Cover 202

5.5.20. Rocker Carrier LH Cylinder 203

5.5.21. Rocker Carrier RH Cylinder 203

5.5.22. Rocker Arms from Rocker Carriers LH & RH 204

5.5.23. Timing Chain Tensioner 204

5.5.24. Cam Shaft, Sprocket & Chain 205

CONTENTS **PAGE**

5.5.25. Magneto Cover 206

5.5.26. Stator Assembly with CPS 207

5.5.27. Magneto Rotor Bolt 208

5.5.28. Starter Clutch from Magneto Rotor 209

5.5.29. Gear Position Sensor 209

5.5.30. FD Sprocket 210

5.5.31. Cylinder Head 210

5.5.32. Components from Cylinder Head 211

5.5.33. Floating Chain Pad 213

5.5.34. Cylinder Barrel 213

5.5.35. Pistons 213

5.5.36. Oil Pressure Switch 213

5.5.37. Oil Pan 214

5.5.38. Oil Strainer 214

5.5.39. Oil Bypass 214

5.5.40. Crankcase Fasteners 215

5.5.41. Splitting Crankcase 219

5.5.42. Balancer Shaft 219

5.5.43. Timing Chain Tensioner Pad 219

5.5.44. Connecting Rod 219

5.5.45. Crankshaft Assembly 220

5.5.46. Countershaft 220

5.5.47. Driveshaft 222

5.5.48. Selector Fork and Spindles 226

5.5.49. Gear Shift Cam Drum 226

5.5 Engine Dismantling

NOTE
• *Ensure the engine is properly clamped on the holding fixture on a worktable.* • *Ensure the engine is clean and free of any oil residue/dirt. Clean engine with recommended degreasing agents/solvents to remove oil residue/dirt.* • *Ensure worktable is clean and atmosphere is dust free.*

5.5.1. Drain Plug

- Loosen and remove oil filler cap **(a)** from the crankcase top on the RH side.
- Use an adjustable plier with soft jaws to unscrew filler cap if necessary.

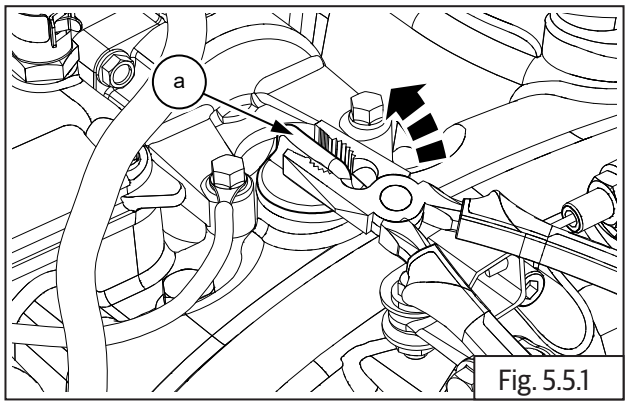

Fig. 5.5.1

	Adjustable plier with soft jaws

- Place a tray **(a)** under the engine, loosen and remove magnetic drain plug **(b)** along with washer **(c)** from the front end of the oil sump.
- Allow the engine oil to drain out completely from the engine.

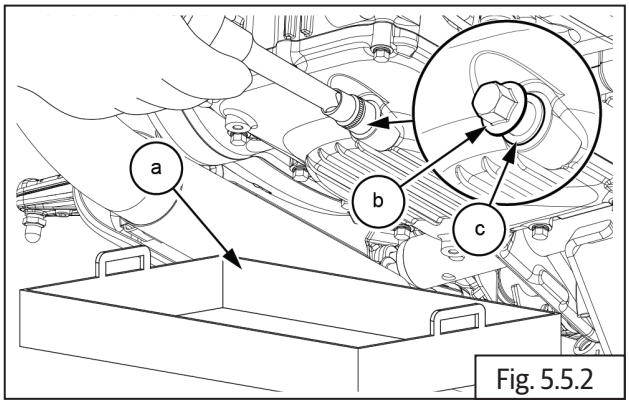

Fig. 5.5.2

	13 mm Socket with Ratchet

⚠ WARNING

Do not spill oil . Collect used oil in a seperate container and dispose it through authorized disposal agencies in your locality. Avoid skin OR body contact with the oil. Promptly wash affected area with soap and water.

NOTE
• *Ensure the engine oil is drained completely.* • *After draining the oil suitably cover the oil filler cap hole to prevent debris AND/OR small components falling into the crankcase.*

5.5.2. Oil Filter

- Place a tray under the engine oil filter.
- Loosen and remove oil filter **(a)** located on front bottom of engine **(b)** using special tool.

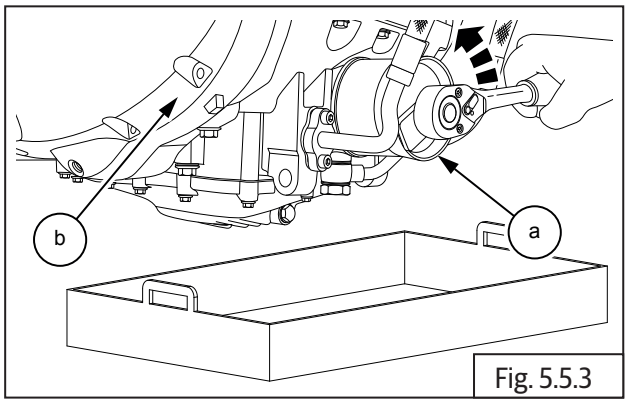

Fig. 5.5.3

	Part No: ST-30294-A
	Part Name: Oil filter wrench with Ratchet

5.5.3. Inlet Manifold Rubber Flange

- Loosen and remove 4 Nos. Hex socket head bolts **(M5) (a)** located on inlet manifold of engine.

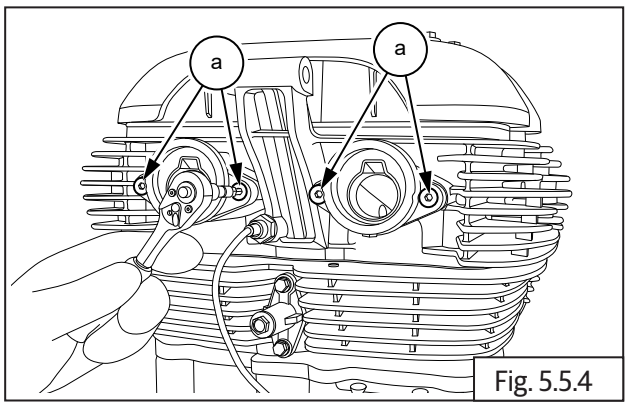

Fig. 5.5.4

	4 mm Allen socket with Ratchet

- Remove 2 Nos. inlet manifold rubber flange **(a)** from engine.

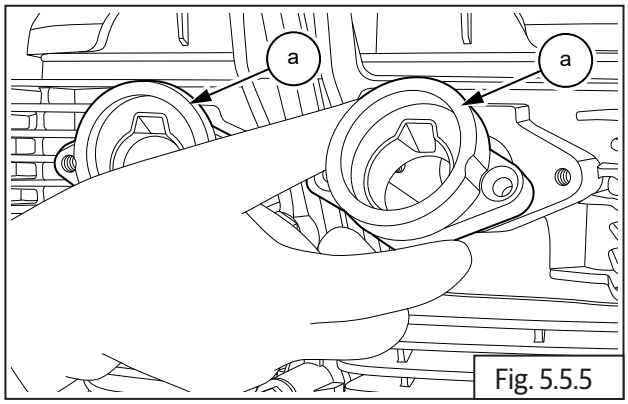

Fig. 5.5.5

5.5.4. Starter Motor

- Loosen and remove 2 Nos. Hex flange head mounting bolts **(M5) (a)** holding starter motor **(b)** to crankcase **(c)**.

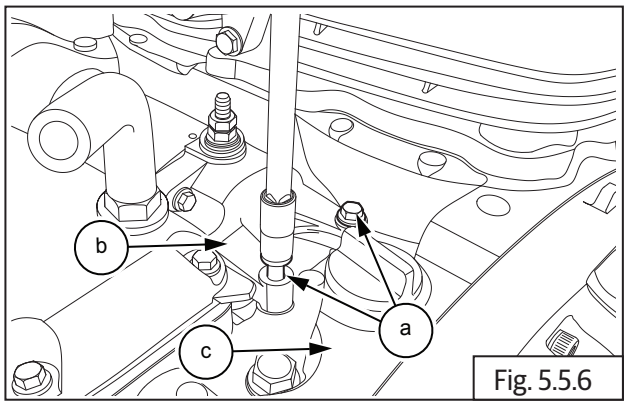

Fig. 5.5.6

	8 mm Socket with Ratchet

- Gently pull out and lift starter motor **(a)** from engine.

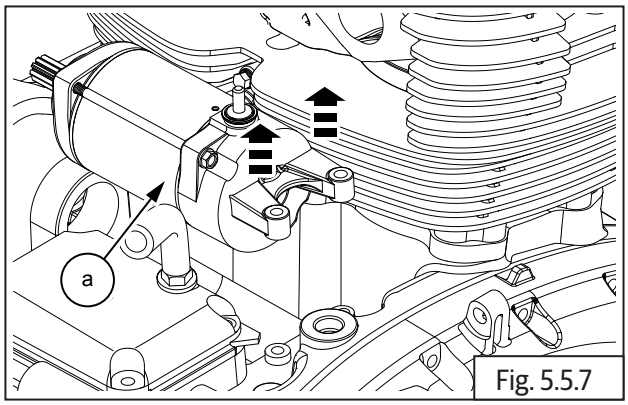

Fig. 5.5.7

NOTE
• **Do not** *tap on the starter motor while removing it. Tapping may damage the internal components.*

5.5.5. Breather Hose

- Release the clamp **(a)** to disconnect breather hose **(b)** from breather box **(c)**.

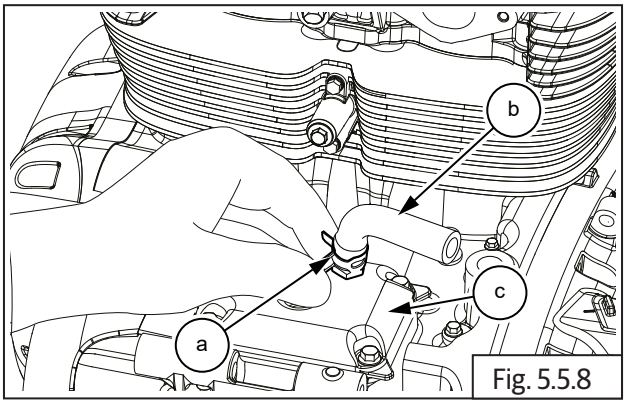

Fig. 5.5.8

	Nose plier

5.5.6. Breather Box Cover

- Loosen and remove the 5 Nos. Hex head flange bolts **(M6) (a)**.

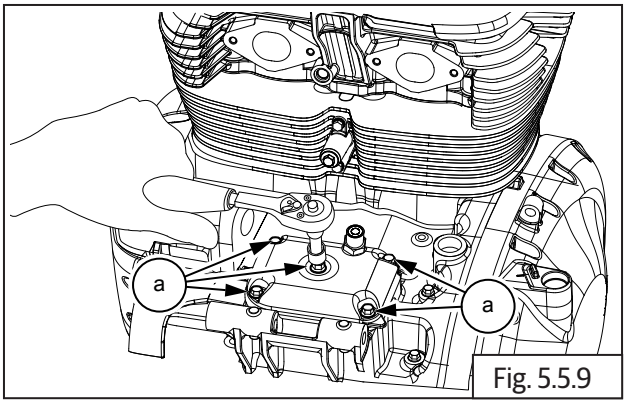

Fig. 5.5.9

	10 mm Socket with Ratchet

- Gently remove the breather box cover **(a)** along with gasket **(b)**.

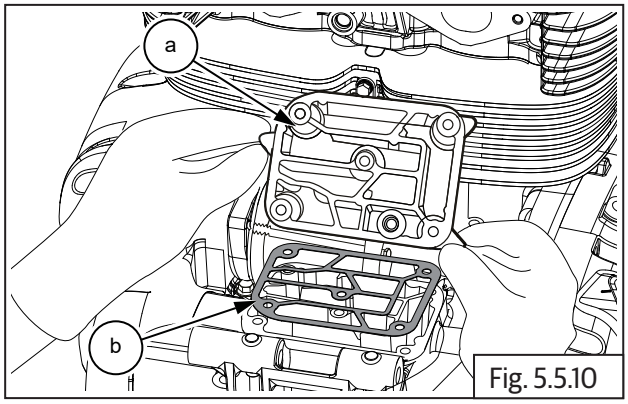

Fig. 5.5.10

5.5.7. Spark Plugs

⚠ CAUTION

Before removing the spark plugs, blow away any dirt accumulated in the spark plug area with compressed air to prevent it from falling into cylinder head.

- Loosen and remove RH spark plug **(a)** from RH cylinder head.

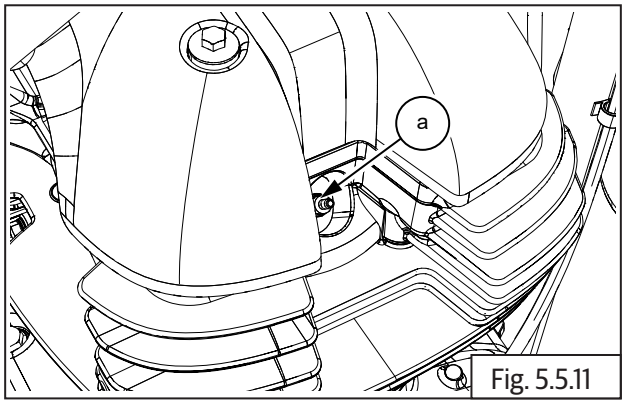

Fig. 5.5.11

	16 mm Socket with Ratchet

- Repeat the procedure to remove LH spark plug.

5.5.8. Clutch Actuating Lever Assembly

- Loosen and remove Hex head bolt **(M6) (a)** from clutch actuating lever assembly **(b)**.

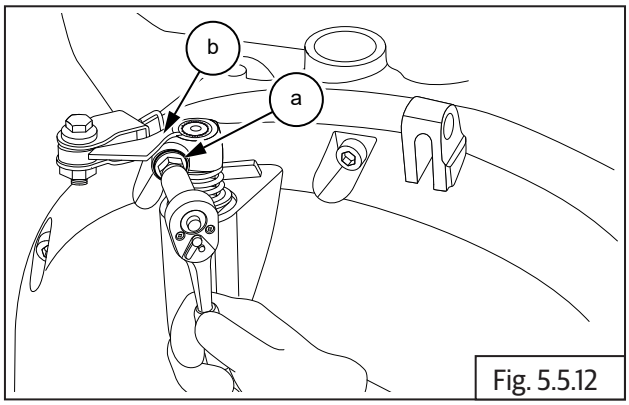

Fig. 5.5.12

	10 mm Socket with Ratchet

- Rotate clutch actuating lever **(a)** in clockwise direction to release tension in spring **(b)**.

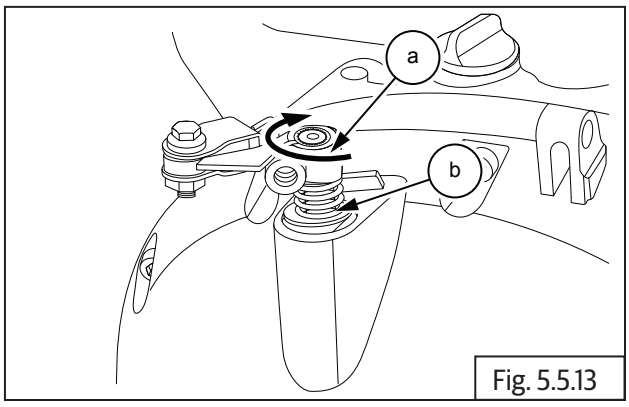

Fig. 5.5.13

- Remove clutch actuating lever **(a)** from clutch shaft **(b)** on cover.

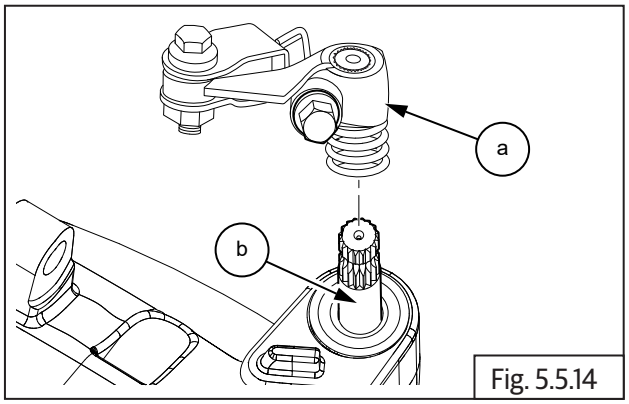

Fig. 5.5.14

	Wedge

- Loosen and remove 14 Nos. Hex socket head screws **(M6) (a)** in a crisscross to remove clutch cover **(b)** from motorcycle RH.

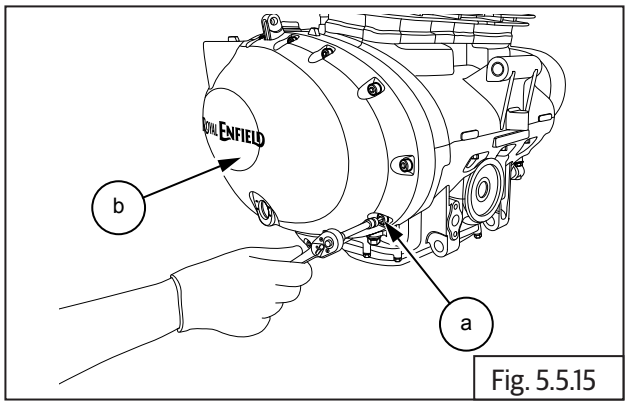

Fig. 5.5.15

	5 mm Allen socket with Ratchet

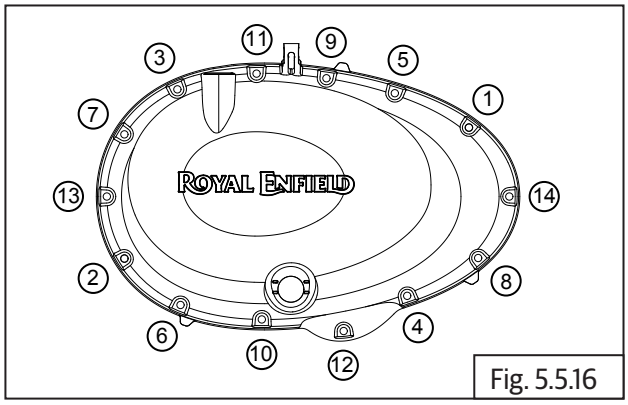

Fig. 5.5.16

- If the cover is jammed in the engine, gently tap on the tabs **(a)** provided on the cover using a plastic/ rubber mallet.

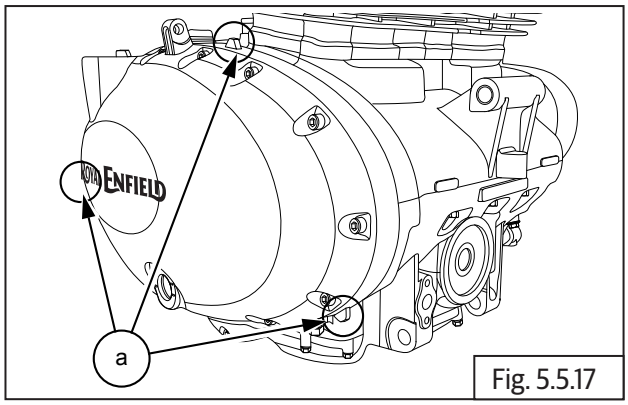

Fig. 5.5.17

	Plastic/Rubber mallet

- Remove gasket **(a)** and 2 Nos. dowel pins **(b)** from clutch cover/engine.

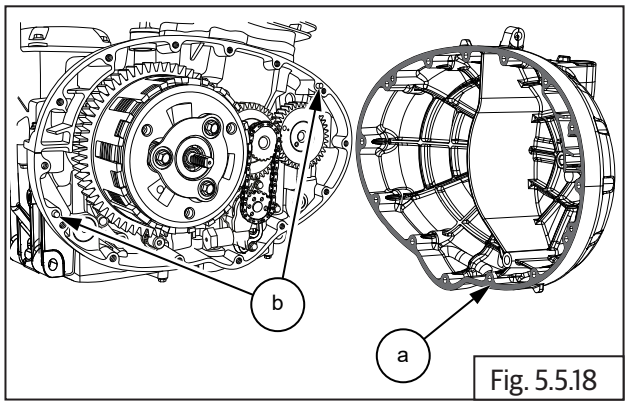

Fig. 5.5.18

⚠ CAUTION

Do not use a sharp tool to scrap the gasket material from the joint faces.

If required scrap only with a soft and blunt tool.

5.5.10. Clutch Actuating Shaft

- Gently remove the E clip **(a)** and washer **(b)** from the bottom of the clutch actuating shaft inside clutch cover.

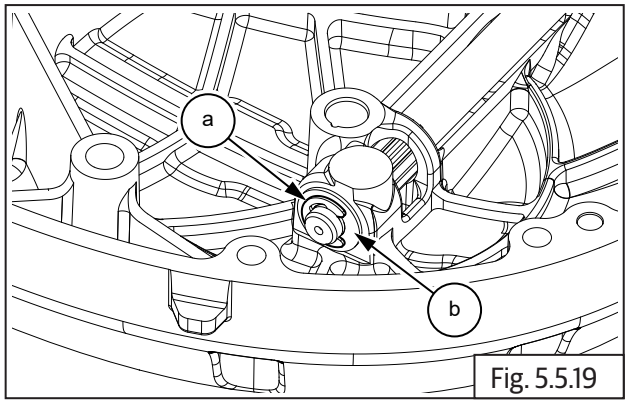

Fig. 5.5.19

	Nose plier

- Remove oil seal **(a)** along with washer **(b)** from outer clutch case.

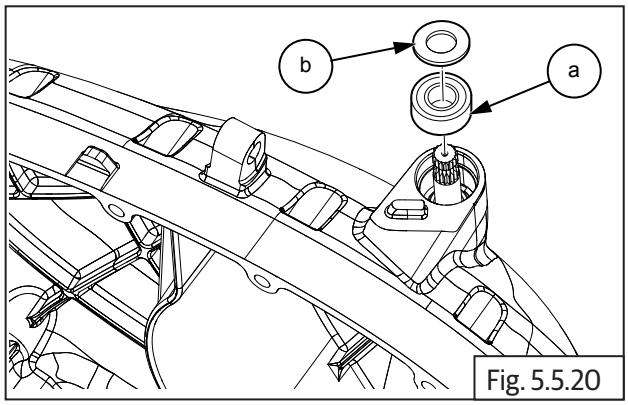

Fig. 5.5.20

- Gently pull out clutch actuating shaft **(a)** from clutch cover **(b)**.

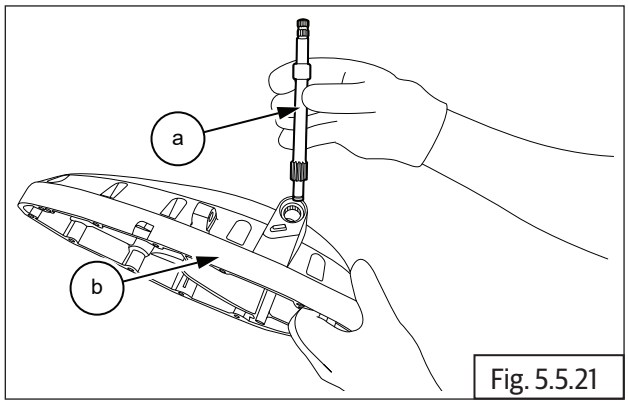

Fig. 5.5.21

- Remove needle roller **(a)** top from clutch cover with special tool.

- Remove needle roller bearing **(b)** bottom from clutch cover with special tool.

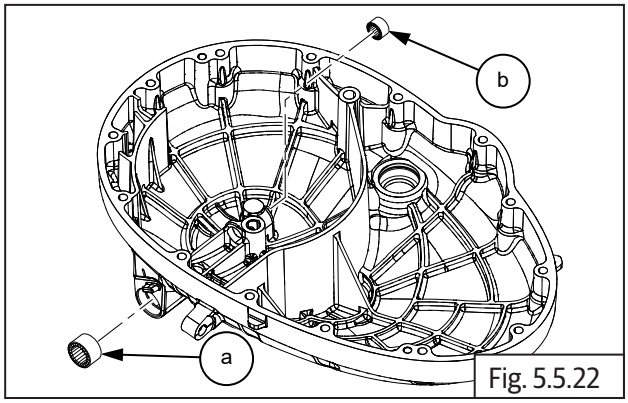

Fig. 5.5.22

SPL 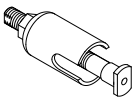	Part No: ST-30265-A Part Name: Clutch actuating shaft top bearing puller

SPL 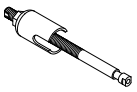	Part No: ST-30263-A Part Name: Clutch actuating shaft bottom bearing puller

5.5.11. Oil Level Window

- Remove the circlip **(a)** on the oil level window inside clutch cover.

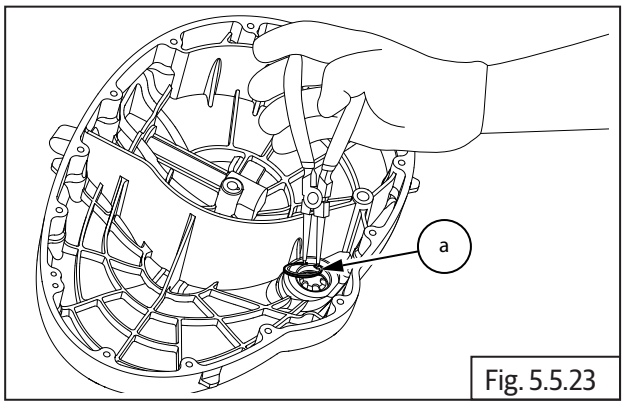

Fig. 5.5.23

	Circlip plier

- Gently press oil window **(a)** from outer side to remove from clutch cover.

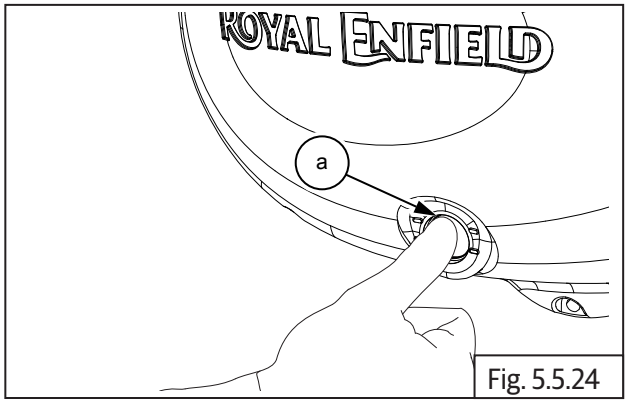

Fig. 5.5.24

5.5.12. Clutch Plates

⚠ CAUTION

Bolts are under spring tension. Loosen bolts progressively and slowly until spring tension is completely released.

- Loosen 3 Nos. Hex flange head bolts **(M6) (a)** on the pressure plate evenly and slowly until tension is released completely.

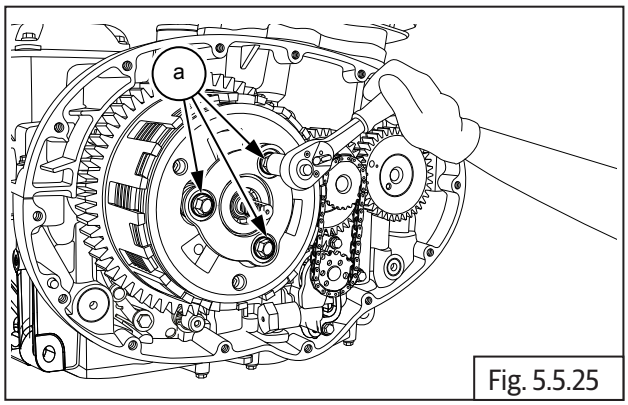

Fig. 5.5.25

	10 mm Socket with Ratchet

- Hold pressure plate **(a)** and remove the bolts **(b)**.
- Remove pressure plate and spring **(c)** from clutch hub.

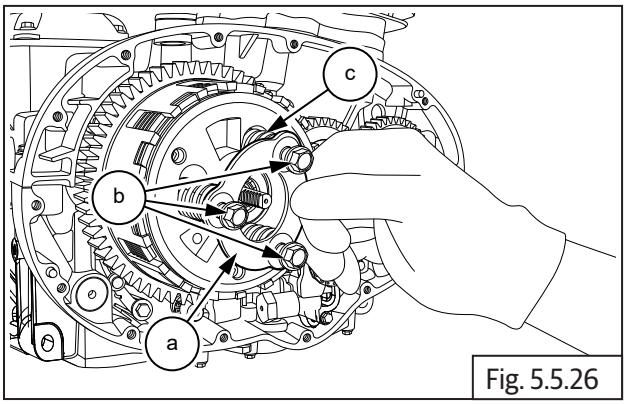

Fig. 5.5.26

- Remove clutch hub **(b)** along with 2 friction plates, 1 steel plate and pull rod **(a)** from the clutch bell.

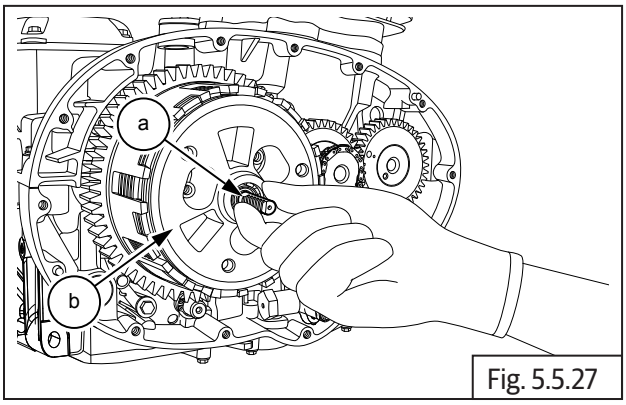

Fig. 5.5.27

- Remove the pull rod from the inner side of clutch bell.
- Remove 1st friction plate **(a)**, steel plate **(b)** and 2nd friction plate **(c)** from clutch hub **(d)**.

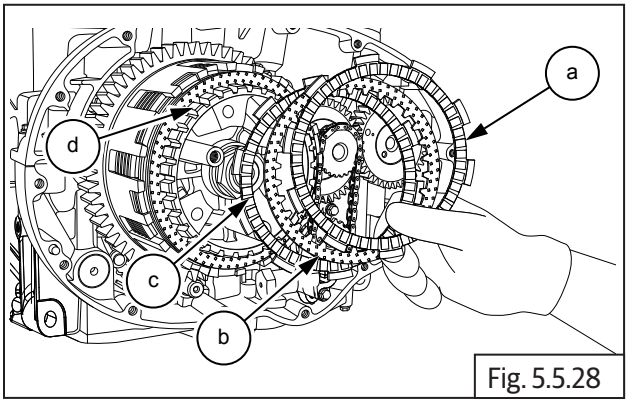

Fig. 5.5.28

- Locate special tool **(a)** on clutch center **(b)** and ensure it is seated fully on the splines.
- Hold the clutch center firmly and remove Hex "U" nut **(M17) (b)** by rotating clockwise.

⚠ CAUTION

Hex "U" nut is a left hand thread. Wrong rotation may damage the threads.

- Remove Hex U nut and washer from counter shaft.

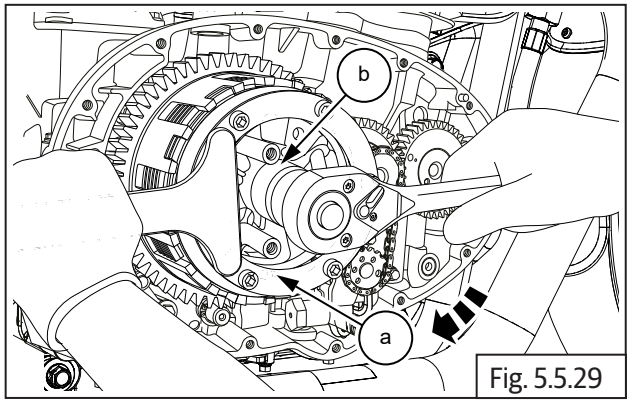

Fig. 5.5.29

SPL 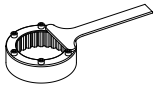	Part No: ST-30266-A
	Part Name: Clutch holder

	24 mm Socket with Ratchet

- Remove special tool and pull out clutch bell assembly **(a)** from the counter shaft along with the remaining 6 plates **(b)** (3 each friction and steel plates) from the clutch housing.

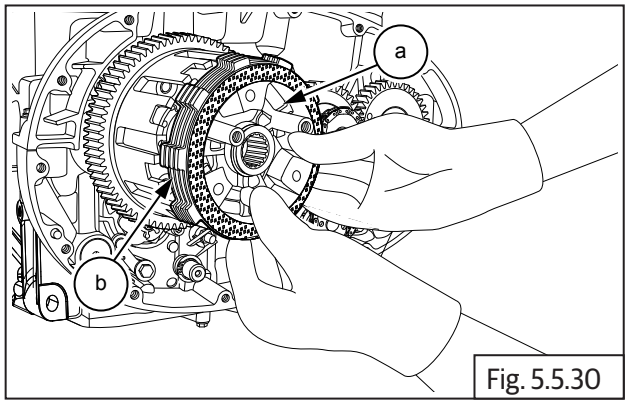

Fig. 5.5.30

NOTE
• *If the plates are to be reused, suitably mark the plates so that they can be reassembled in the same sequence as it was before dismantling.*

- Remove thrust washer **(a)** from counter shaft.

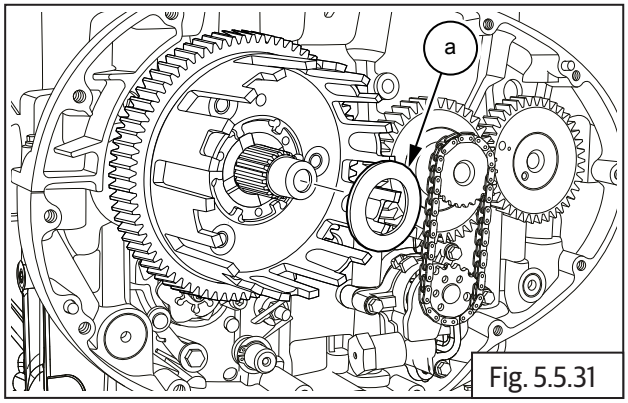

Fig. 5.5.31

- Remove clutch housing **(a)** from counter shaft .

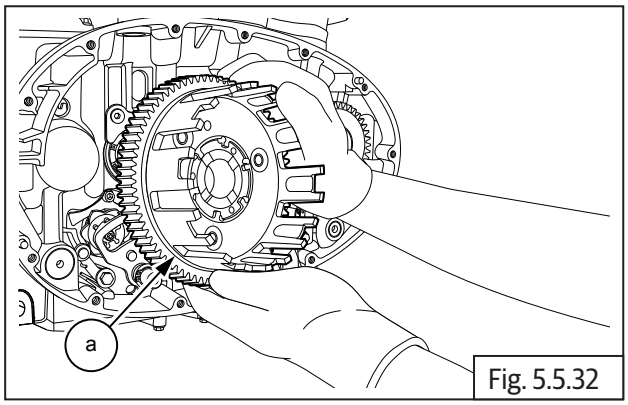

Fig. 5.5.32

- Remove the needle bearing **(a)**.

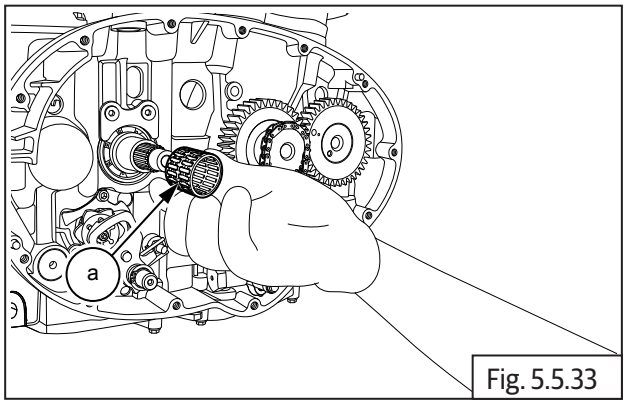

Fig. 5.5.33

- Remove collar bush **(a)** from counter shaft.

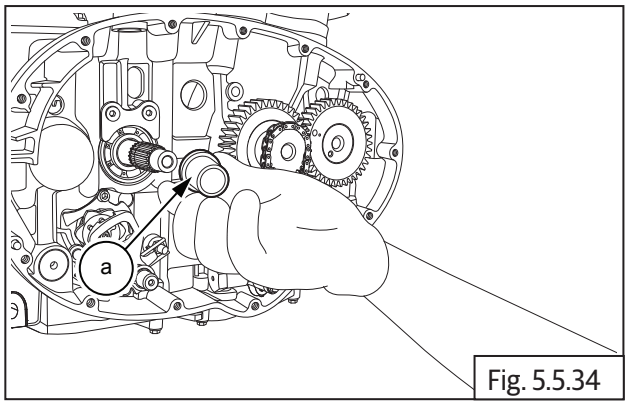

Fig. 5.5.34

5.5.13. Oil Pump

- Loosen and remove Hex flange bolt **(M6) (a)** on oil pump sprocket.

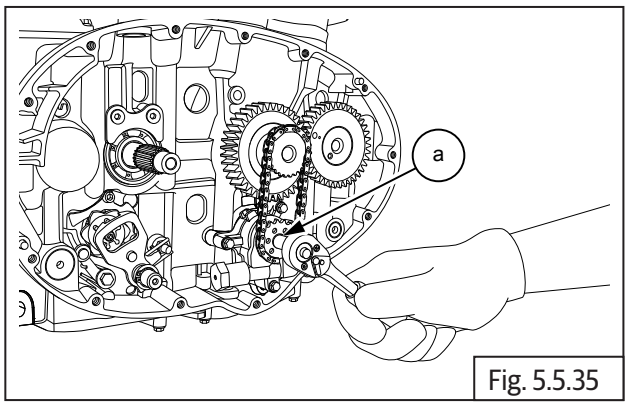

Fig. 5.5.35

	8 mm Socket with Ratchet

- Gently pull out the sprocket **(a)** from oil pump shaft.
- Release and remove chain **(b)** from the teeth on crankshaft sprocket **(c)**.

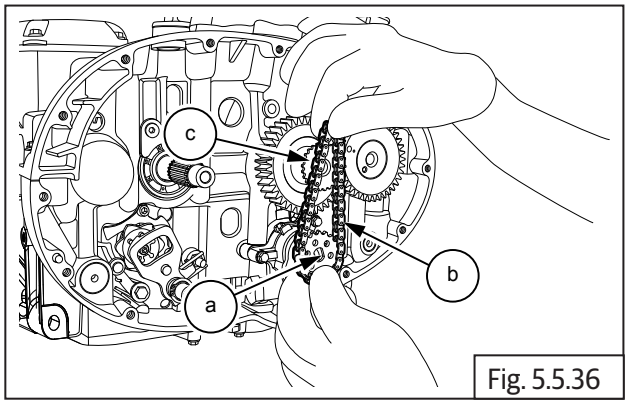

Fig. 5.5.36

- Loosen and remove 4 Nos. Hex flange head bolts **(M5) (a)**.

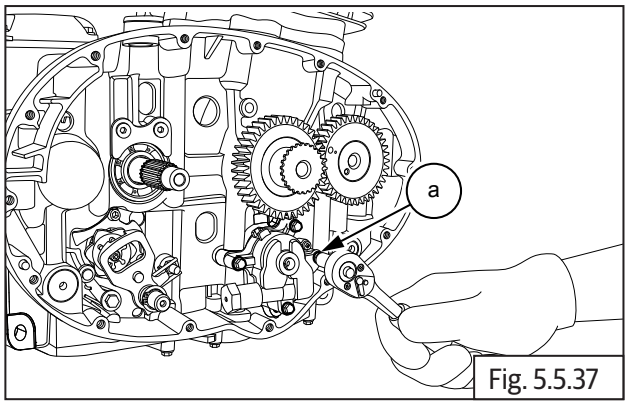

Fig. 5.5.37

	8 mm Socket with Ratchet

- Remove the oil pump **(a)**..

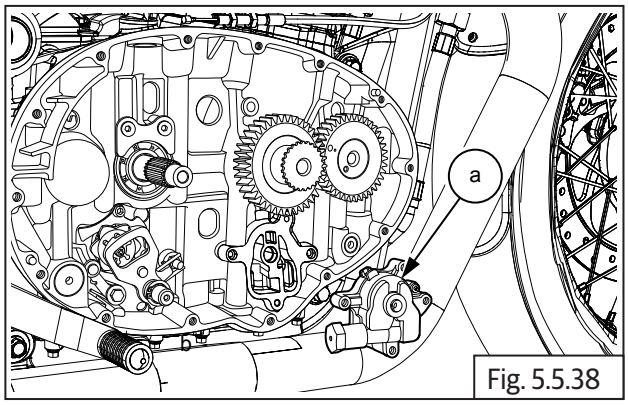

Fig. 5.5.38

NOTE
• *The oil pump does not have any serviceable parts, hence as to be replaced only as a complete assembly.*

5.5.14. Gear Shifter Shaft

- Remove the circlip **(a)** from shifter shaft **(b)** on engine LH side.

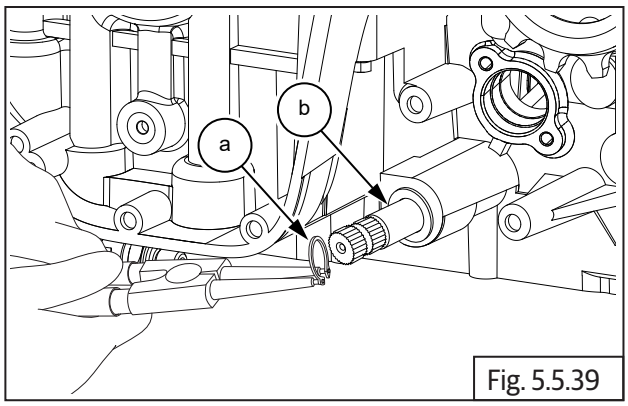

Fig. 5.5.39

	Circlip plier

- Remove the washer **(a)** from shifter shaft.

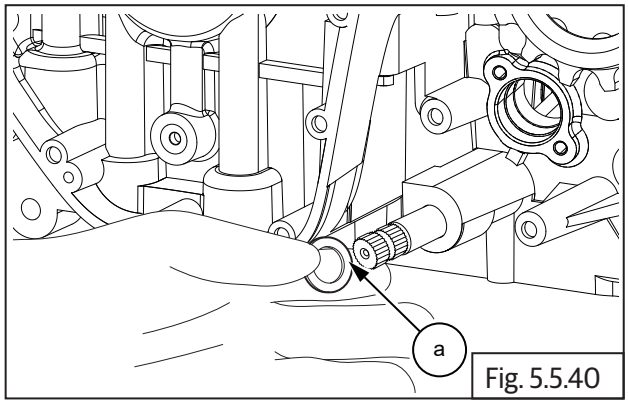

Fig. 5.5.40

- Gently pull out shifter shaft assembly **(a)** from engine RH side.

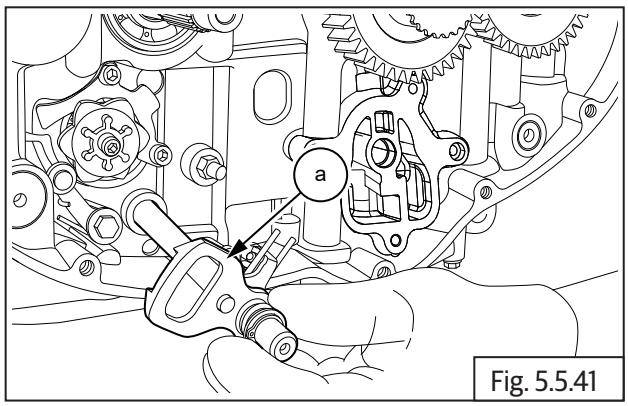

Fig. 5.5.41

- Remove circlip **(a)** from shorter end of shifter shaft **(b)**.

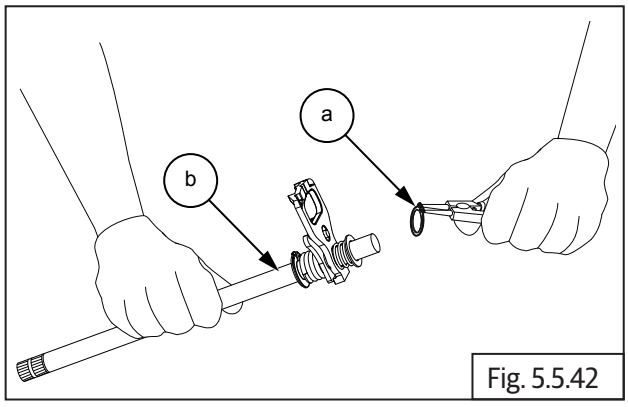

Fig. 5.5.42

	Circlip plier

- Remove washer **(a)** from shorter end of shifter shaft **(b)**.

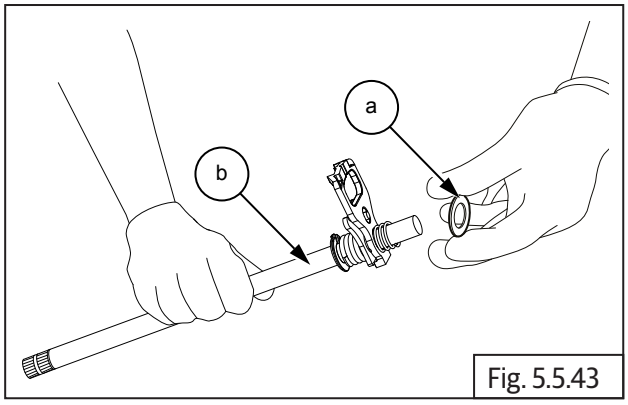

Fig. 5.5.43

- Remove spring **(a)** from shifter shaft **(b)**.

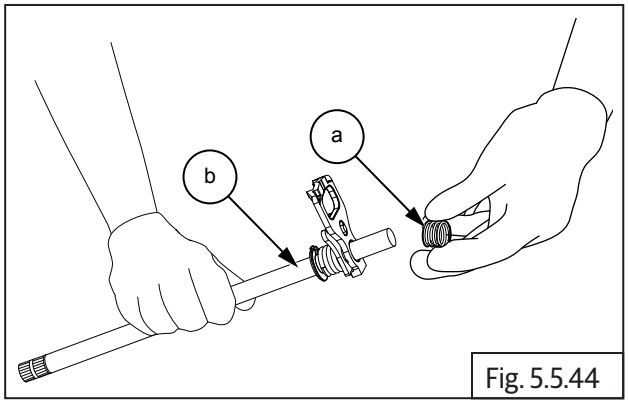

Fig. 5.5.44

- Remove plate **(a)** from shorter end of shifter shaft **(b)**.

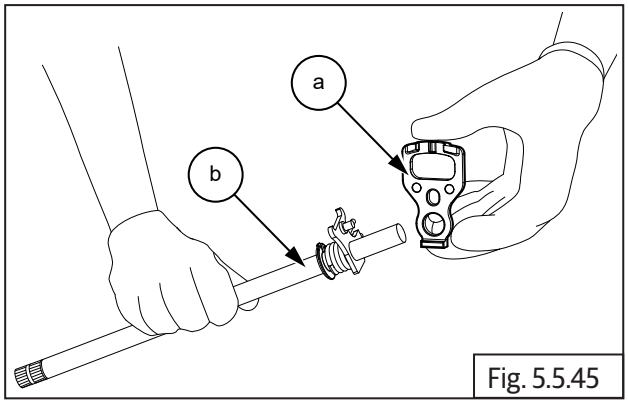

Fig. 5.5.45

- Remove circlip **(a)** from longer end of shifter shaft **(b)**.

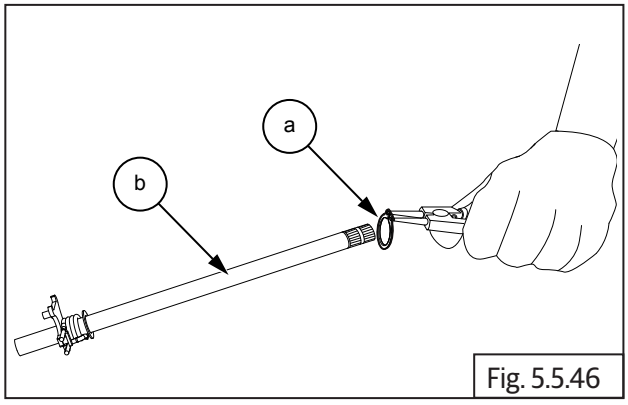

Fig. 5.5.46

	Circlip plier

- Remove washer **(a)** from longer end of shifter shaft **(b)**.

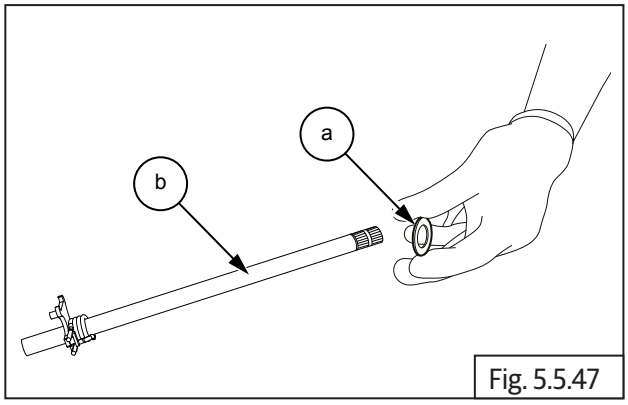

Fig. 5.5.47

- Expand spring legs and pull out spring **(a)** from longer end of shifter shaft **(b)**.

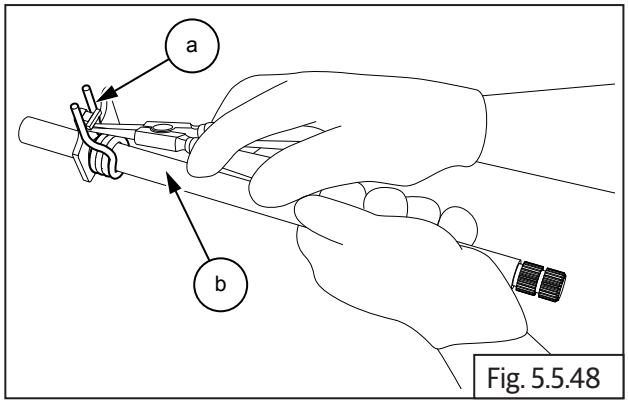

Fig. 5.5.48

	Circlip plier

5.5.15. Star Index Stopper

⚠ CAUTION
Spring loaded bolt. Support stopper while removing bolt.

- Loosen and remove Hex socket head bolt **(M6) (a)** from lower crankcase (RH) (clutch side).
- Remove stopper along with spring and washer.

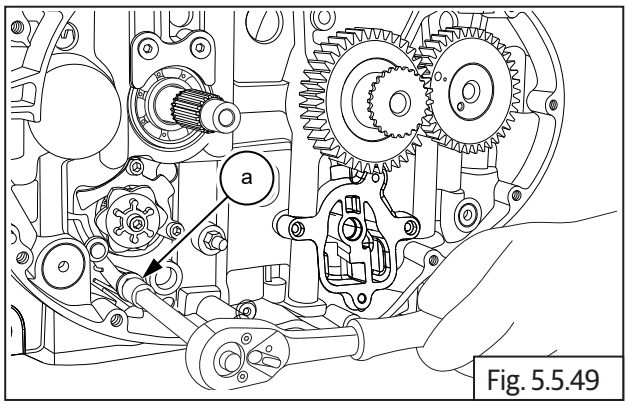

Fig. 5.5.49

	10 mm Socket with Ratchet

5.5.16. Star Index

- Loosen and remove Hex socket head stepped bolt **(M6) (a)** on gear shift cam drum.

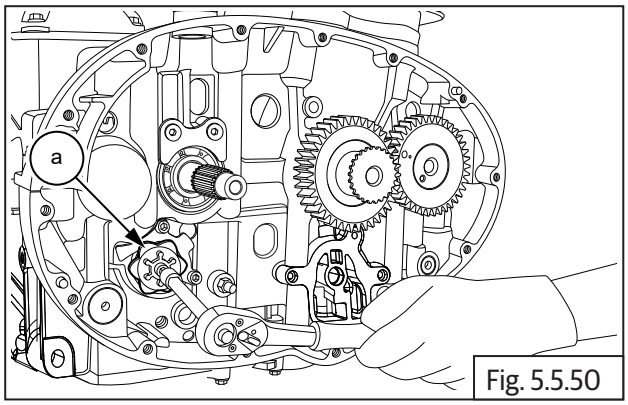

Fig. 5.5.50

	5 mm Allen socket with Ratchet

- Loosen and remove 2 Nos. Hex head bolts **(M6) (a)** from selector fork shaft stopper plate.

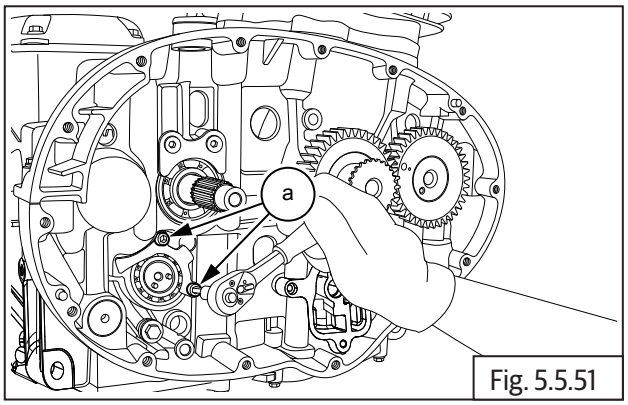

Fig. 5.5.51

	5 mm Allen socket with Ratchet

5.5.17. Reed Valves

- Loosen and remove 4 Nos. Hex socket head screws **(M6) (a)** holding reed valves to cylinder head.

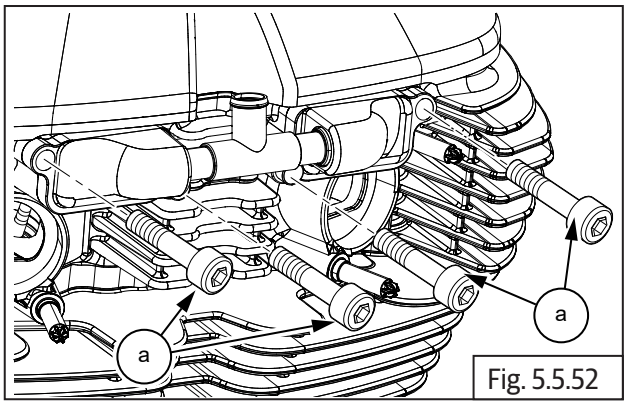

Fig. 5.5.52

	5 mm Allen Socket with Ratchet

- Remove reed valve **(a)** from the cylinder head.

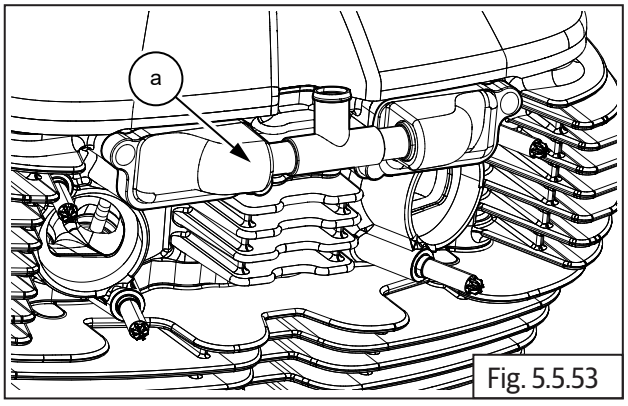

Fig. 5.5.53

5.5.18. Cylinder Head Cover

- Loosen and remove 4 Nos. Hex flange head bolts **(M6) (a)** in crisscross pattern along with the rubber seals and washers.

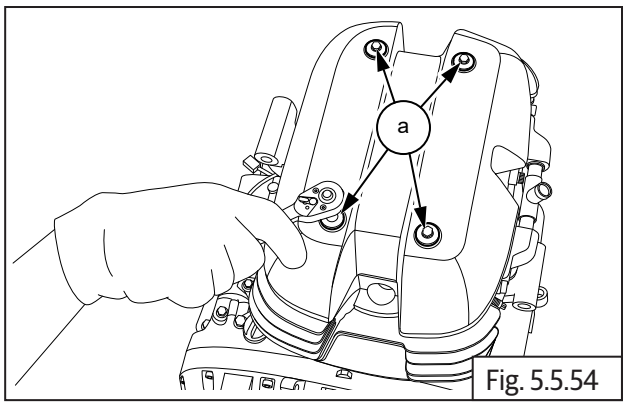

Fig. 5.5.54

	8 mm Socket with Ratchet

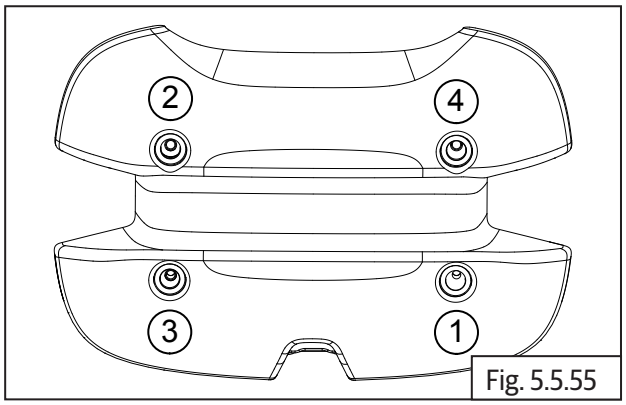

Fig. 5.5.55

- Gently remove rocker cover **(a)** from cylinder head **(b)**.

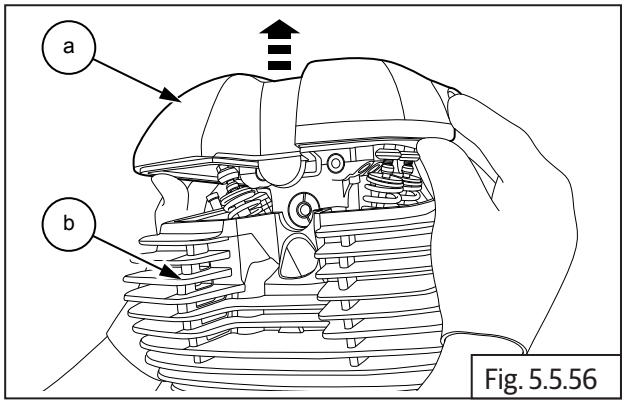

Fig. 5.5.56

- Remove rubber gasket **(a)** from cylinder head cover **(b)**.

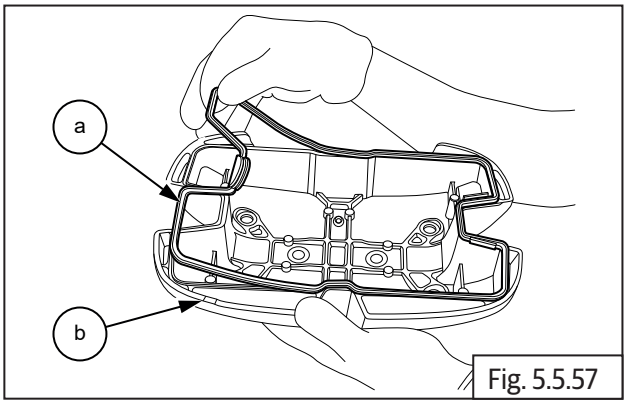

Fig. 5.5.57

5.5.19. Crankshaft Plug on Magneto Cover

- Remove crankshaft hole plug **(M34) (a)** from center of magneto cover **(b)**.

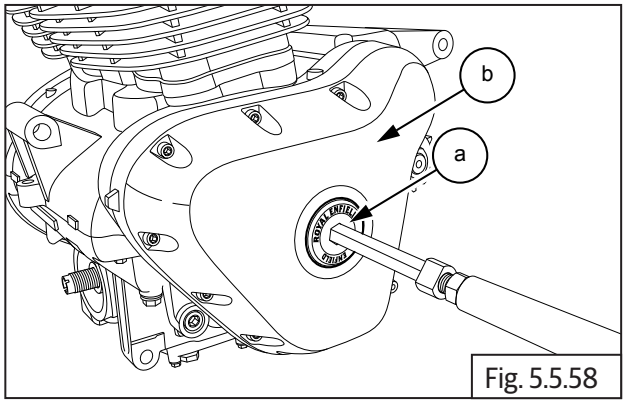

Fig. 5.5.58

	14 mm Allen key

- Remove O-ring **(a)** from crankshaft hole plug **(b)**.

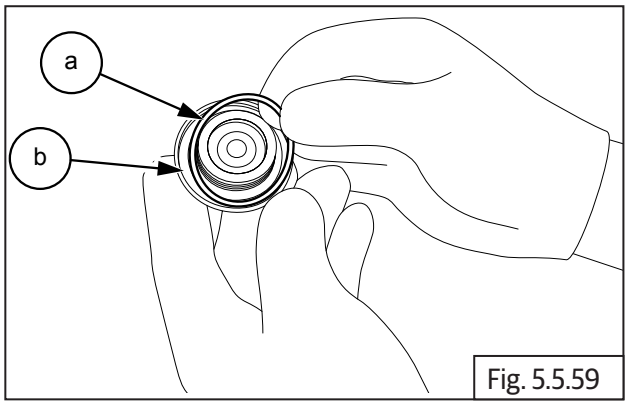

Fig. 5.5.59

5.5.20. Rocker Carrier LH Cylinder

- Locate 17mm socket with ratchet **(a)** on the magneto rotor bolt inside the plug hole and rotate magneto rotor slowly till reference mark "L" on camshaft LH side is aligned with machined gasket surface on cylinder head.

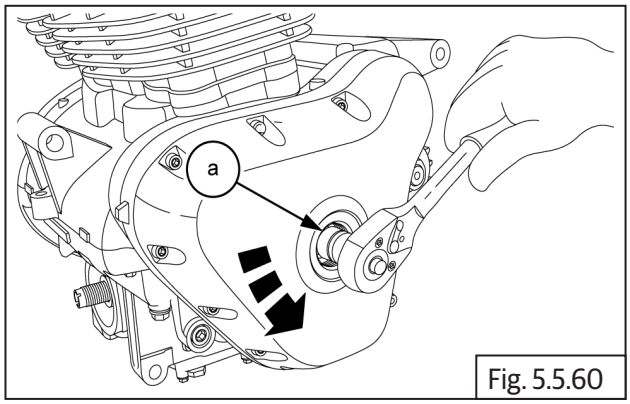

Fig. 5.5.60

	17 mm Socket with Ratchet

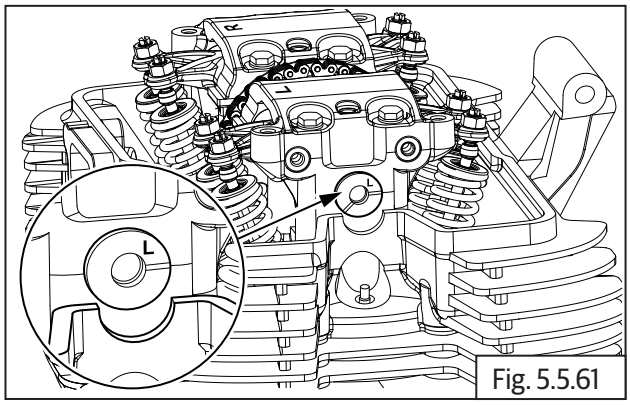

Fig. 5.5.61

- Loosen and remove 4 Nos. Hex flange head bolts **(M6) (a)** from rocker carrier.

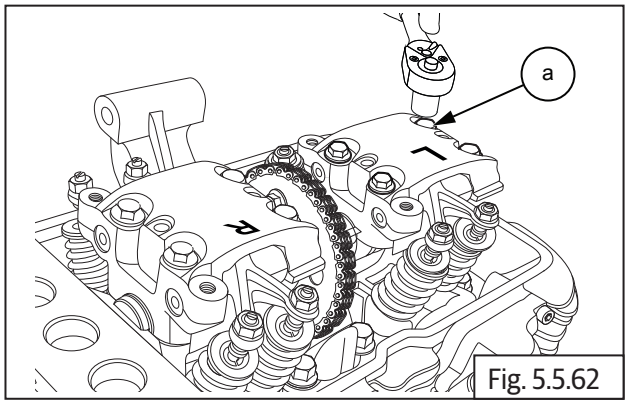

Fig. 5.5.62

	10 mm Socket with Ratchet

- Gently remove the rocker carrier **(a)** along with rocker arms from cylinder head.

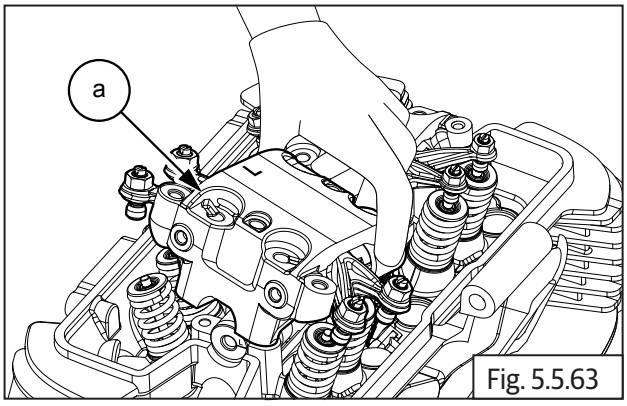

Fig. 5.5.63

5.5.21. Rocker Carrier RH Cylinder

- Locate 17mm socket with ratchet **(a)** on the magneto rotor bolt inside the plug hole and rotate magneto rotor slowly till reference mark "R" on camshaft LH side is aligned with machined gasket surface on cylinder head.

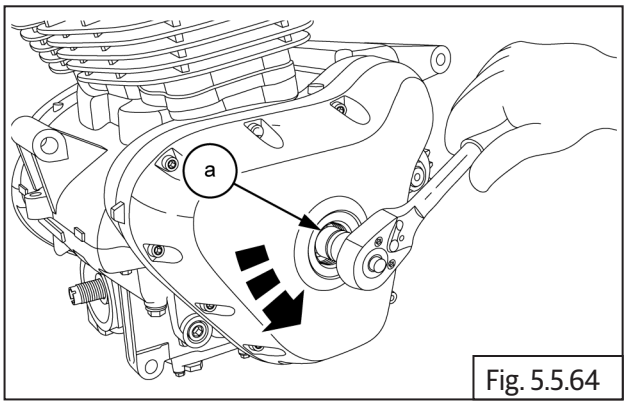

Fig. 5.5.64

	17 mm Socket with Ratchet

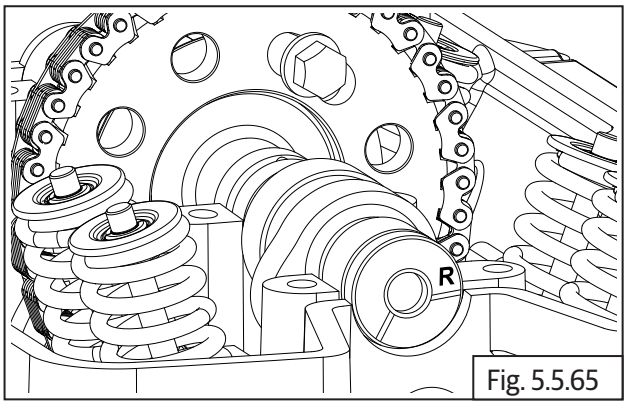

Fig. 5.5.65

- Loosen and remove 4 Nos. Hex head bolts **(M10) (a)** from rocker carrier RH.

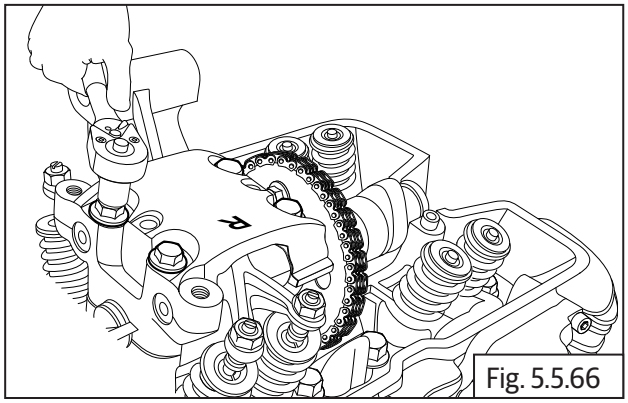
Fig. 5.5.66

	10 mm Socket with Ratchet

5.5.22. Rocker Arms from Rocker Carriers LH & RH

- Thread in a Hex flange bolt **(M6) (a)** into the threaded portion of rocker shaft **(b)**.
- Gently pull out rocker shaft from rocker carrier, duly supporting the rocker arms.
- Remove rocker arms inlet and exhaust from the rocker carrier.
- Repeat the procedures above to remove rocker arms from the other carrier.

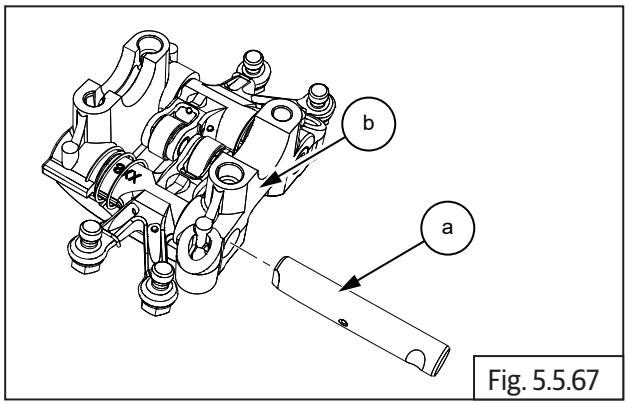

Fig. 5.5.67

- Gently depress the spring **(a)** and remove from rocker carrierrs **(b)**.

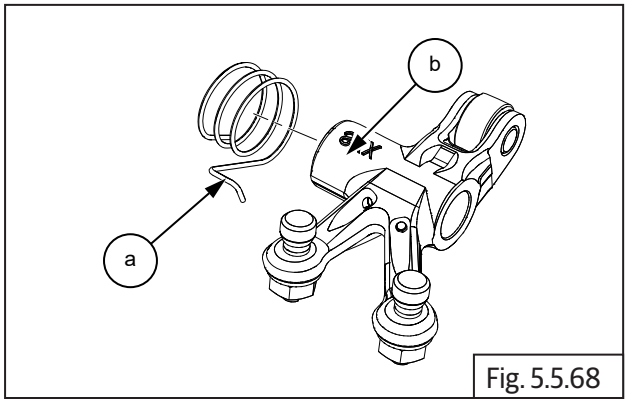

Fig. 5.5.68

5.5.23. Timing Chain Tensioner

- Loosen and remove center Hex flange bolt **(M6) (a)** from cylinder barrel.

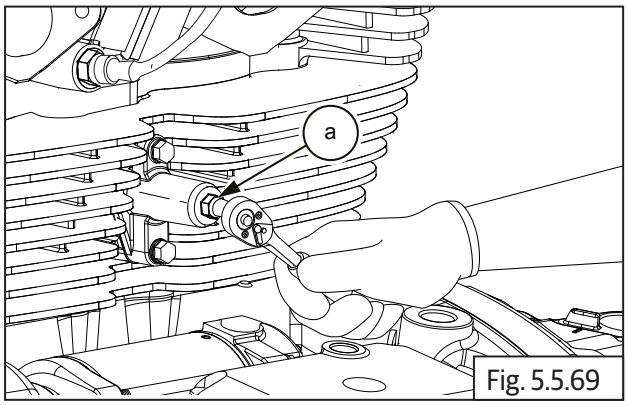

Fig. 5.5.69

	10 mm Socket with Ratchet

- Loosen and remove 2 Nos. Hex flange bolts **(M6) (a)** from cylinder barrel **(b)**.

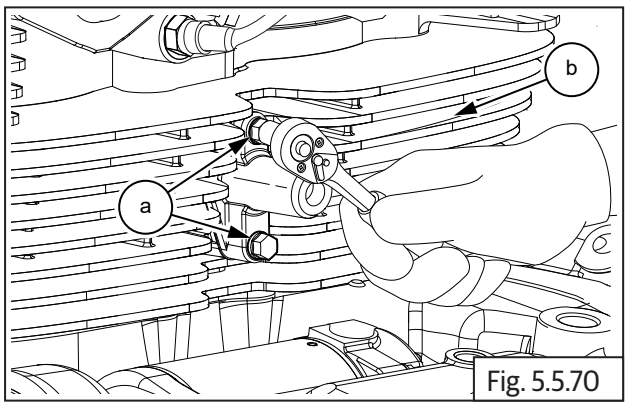

Fig. 5.5.70

	10 mm Socket with Ratchet

- Remove timing chain pad adjuster **(a)** from cylinder barrel.

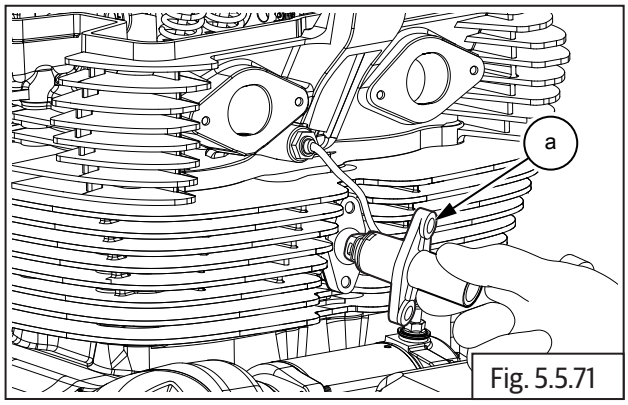

Fig. 5.5.71

5.5.24. Cam Shaft, Sprocket & Chain

- Rotate magneto rotor slowly till one of the Hex head bolts on cam chain sprocket appears at the top most position.

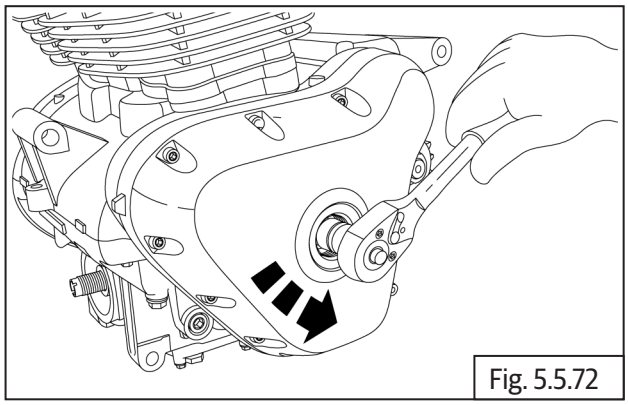
Fig. 5.5.72

	17 mm Socket with Ratchet

- Loosen and remove 1st Hex head bolt **(M8) (a)** from cam sprocket.

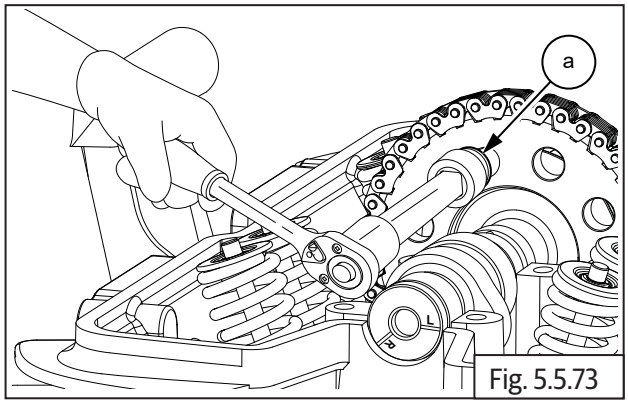

Fig. 5.5.73

	12 mm Socket with Ratchet

- Rotate magneto rotor slowly till other bolt is visible at top most position.

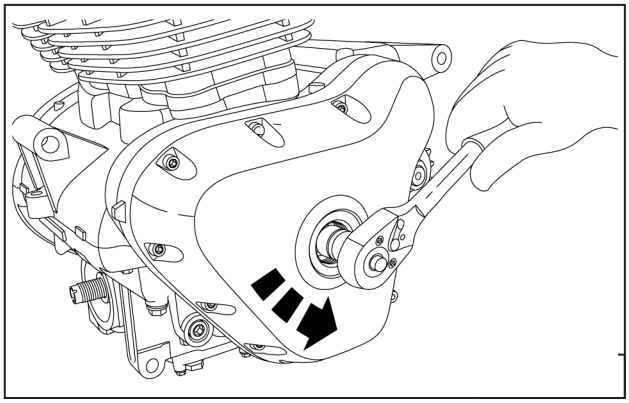

	17 mm Socket with Ratchet

- Loosen and remove 2nd Hex head bolt **(M8) (a)** from cam sprocket.

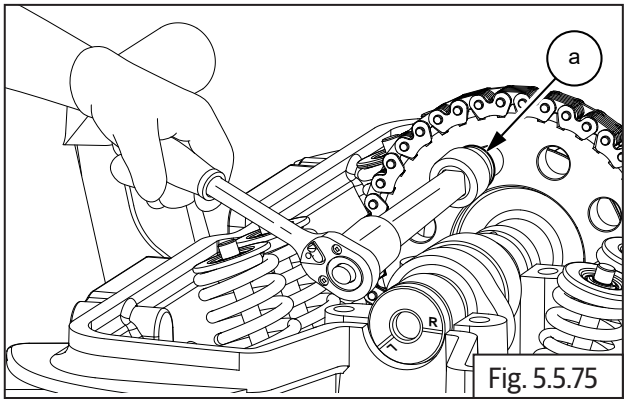

Fig. 5.5.75

	12 mm Socket with Ratchet

- Remove "C" washer **(a)** from groove in cylinder head LH to release cam shaft.

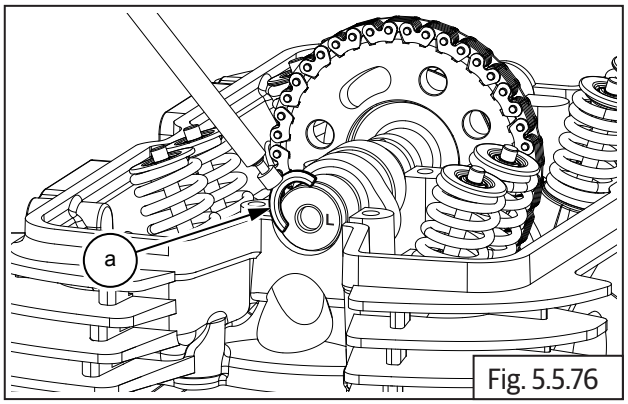

Fig. 5.5.76

	Magnetic stick

- Gently release timing chain **(a)** from camshaft sprocket and remove camshaft **(b)** from cylinder head assembly.

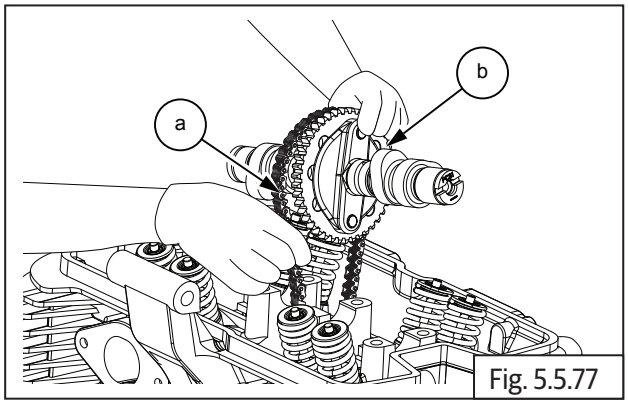

Fig. 5.5.77

- Support timing chain suitably at the top to prevent it from dropping into the crankcase.

5.5.25. Magneto Cover

- Loosen and remove 12 Nos. Hex socket head bolts **(M6) (a)** in crisscross pattern to remove magneto cover **(b)** from LH.

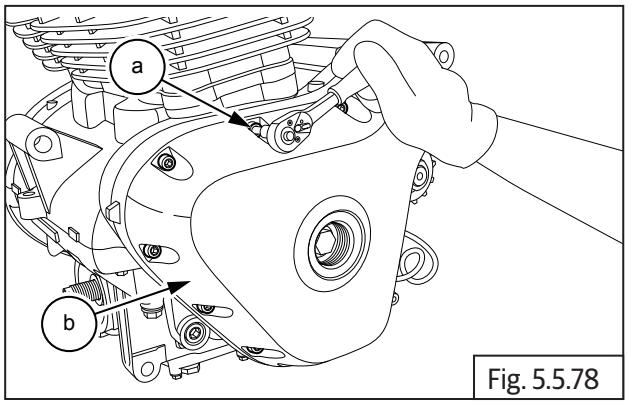

Fig. 5.5.78

	5 mm Allen socket with Ratchet

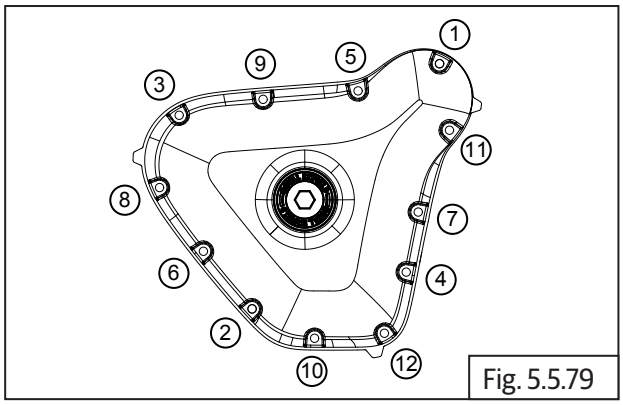

Fig. 5.5.79

- The magneto cover may be hard to remove from crankcase, due to the magnetic force from the magneto acting on the stator coil.
- Gently tap on the tabs **(a)** with a plastic / rubber mallet, on the inside edges of the magneto cover, to remove.

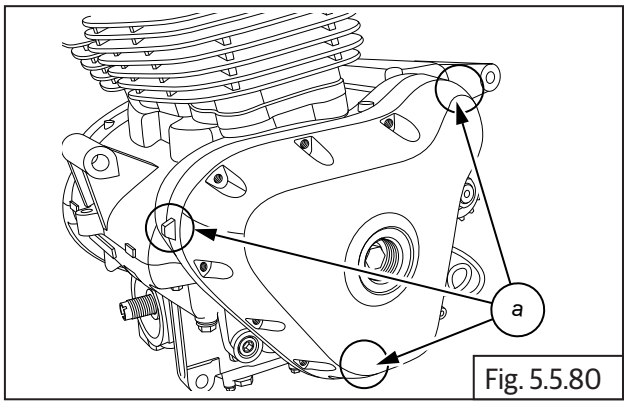

Fig. 5.5.80

	Plastic/Rubber mallet

- Remove gasket **(a)**.

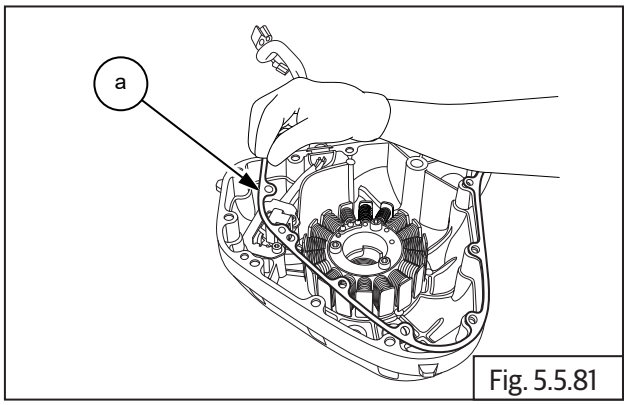

Fig. 5.5.81

⚠ CAUTION

Do not use a sharp tool to scrap the gasket material from the joint faces.

If required scrap only with a soft and blunt tool.

- Remove the 2 dowel pins **(a)** and **(b)** from the crankcases/magneto cover.

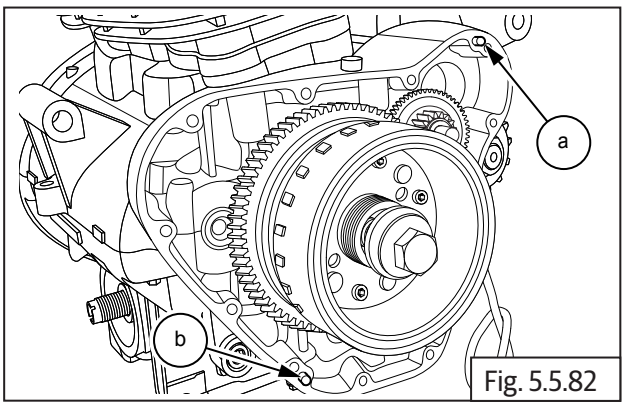

Fig. 5.5.82

5.5.26. Stator Assembly with CPS

Stator Assembly with Crank Position Sensor (CPS)

- Loosen and remove 3 Nos. Hex socket head screws **(M6) (a)** holding the stator assembly **(b)**.

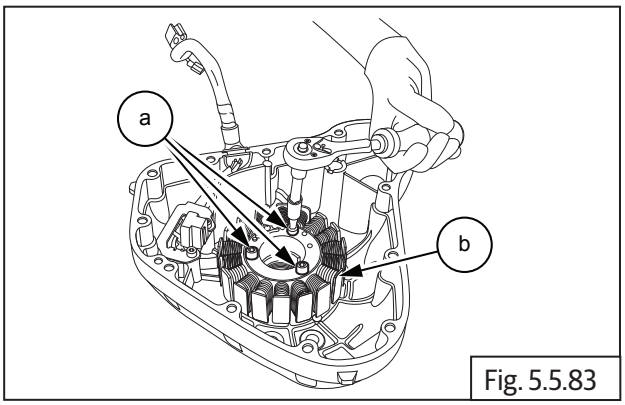

Fig. 5.5.83

	5 mm Allen socket with Ratchet

- Loosen and remove 2 Nos. Hex socket head screws **(M6) (a)** on guide plate **(b)**, holding crank position sensor to magneto cover.

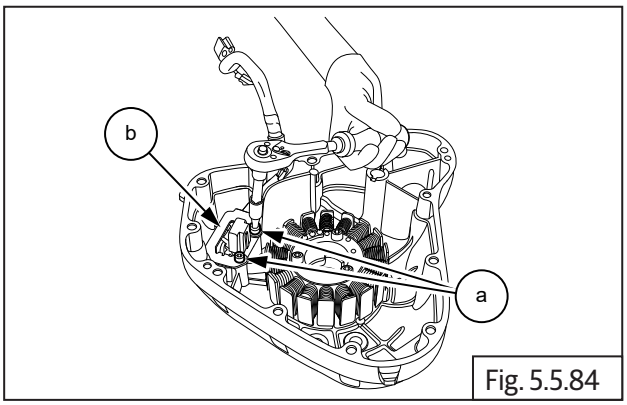

Fig. 5.5.84

	5 mm Allen socket with Ratchet

- Remove the guide plate **(a)** from magneto cover.

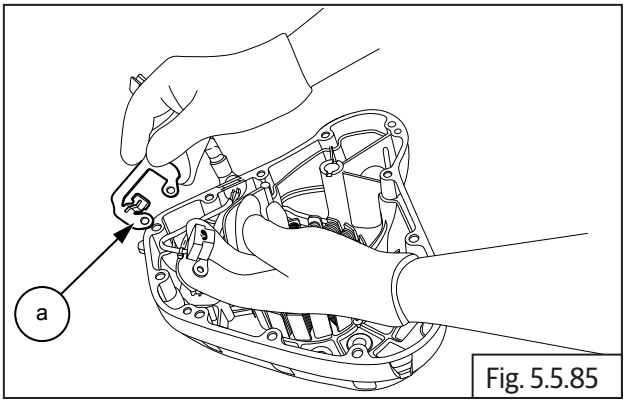

Fig. 5.5.85

- Gently release the wiring grommet **(a)** from the magneto cover.
- Gently remove stator assembly **(b)** from magneto cover.

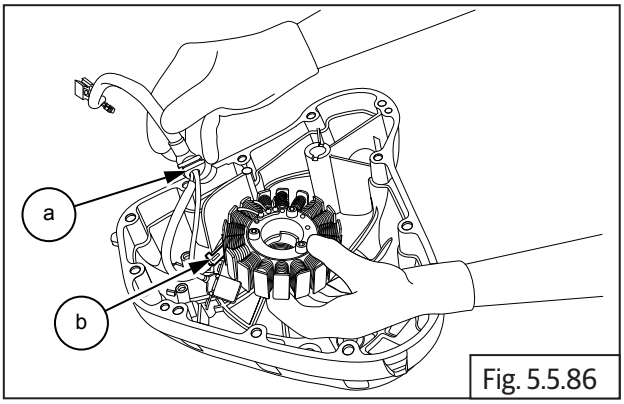

Fig. 5.5.86

5.5.27. Magneto Rotor Bolt

- In order to loosen magneto rotor bolt, it will be necessary to remove clutch cover.
- Insert special tool **(a)** in crankcase RH to lock the crankshaft and prevent rotation.

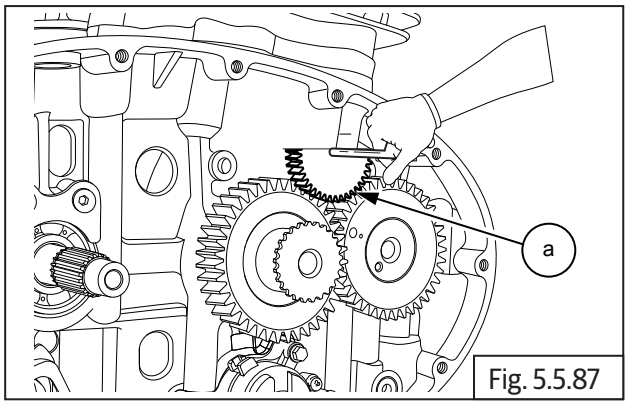

Fig. 5.5.87

SPL 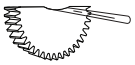	Part No: ST-27533-2 Part Name: Crank Gears locking tool

- Loosen and remove Hex flange head bolt **(M12) (a)**.

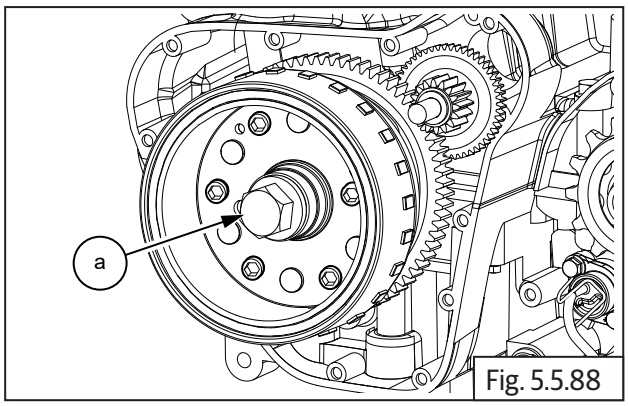

Fig. 5.5.88

	17 mm Socket with Ratchet

- Ensure center bolt of magneto rotor puller is loosened sufficiently.
- Assemble puller **(b)** on magneto rotor **(a)** and thread in fully.
- Tighten center bolt onto puller till magneto rotor gets rreleased from crankshaft.

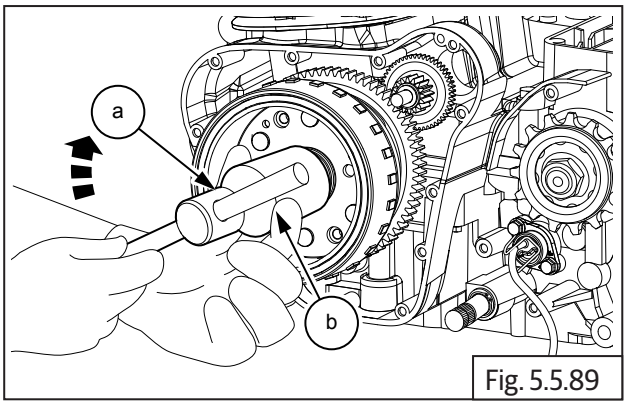

Fig. 5.5.89

SPL 	Part No: ST-30274-A Part Name: Magneto Puller Assembly

- Gently pull out magneto rotor assembly **(a)** with starter clutch.

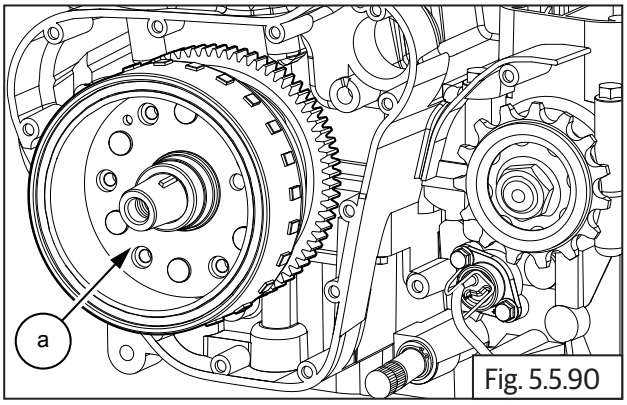

Fig. 5.5.90

- Remove woodruff key **(a)** from crankshaft.

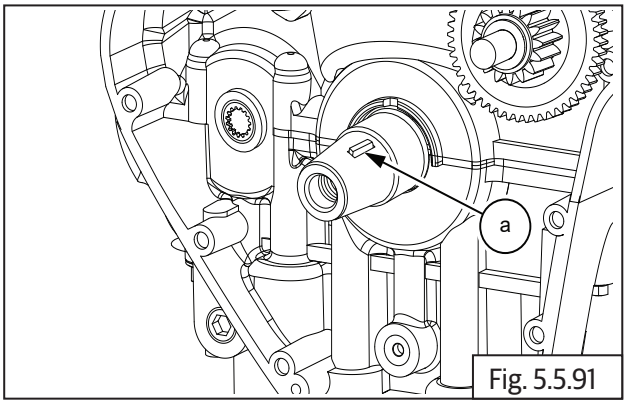

Fig. 5.5.91

5.5.28. Starter Clutch from Magneto Rotor

- Slightly loosen 6 Nos. Hex socket head screws **(M6) (a)** from inside magneto rotor. **Do not LOOSEN AND REMOVE FULLY**.

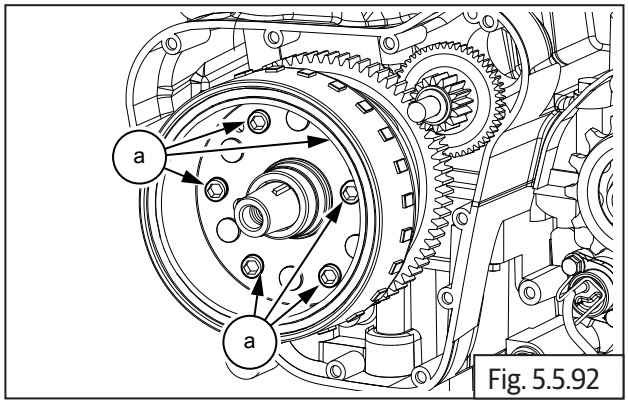

Fig. 5.5.92

	5 mm Allen socket with Ratchet

- Remove magneto rotor assembly **(a)** from crank shaft, hold the rotor firmly, rotate gear starter clutch **(b)** anti-clockwise and pull out simultaneously to separate rotor from the gear.

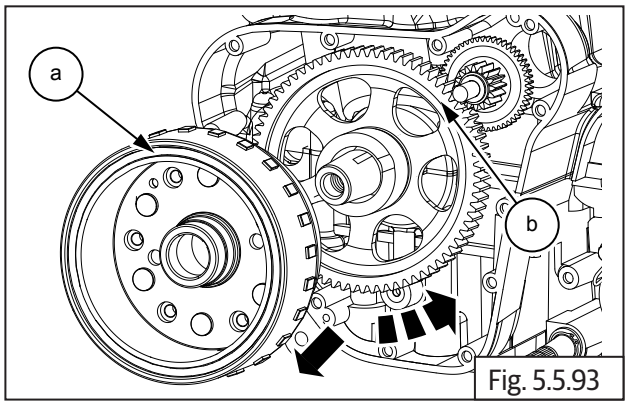

Fig. 5.5.93

- Remove starter idle gear **(a)**.

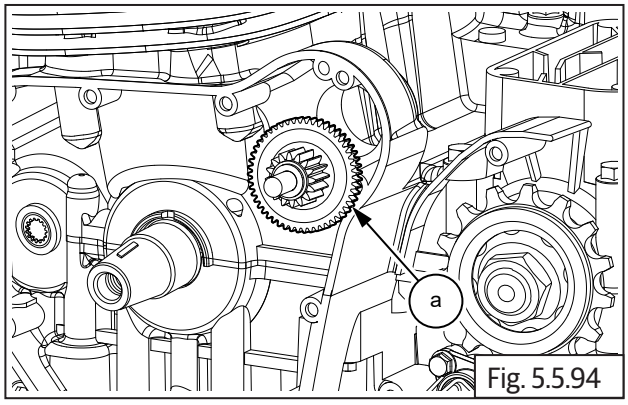

Fig. 5.5.94

- Loosen and remove 6 Nos. Hex socket head screws **(M6) (a)** from inside magneto rotor **(b)** and separate starter clutch with outer ring **(c)**.
- Remove starter clutch from outer ring.

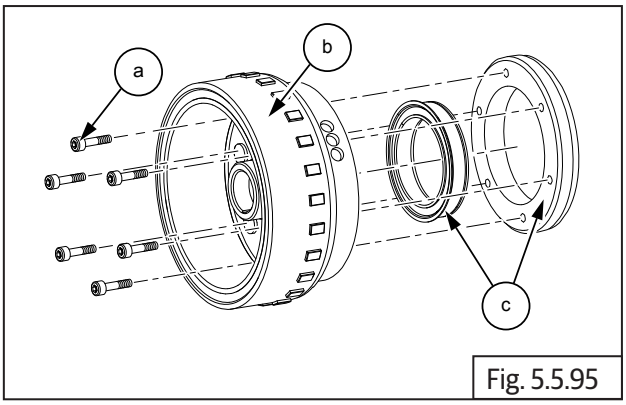

Fig. 5.5.95

	5 mm Allen socket with Ratchet

5.5.29. Gear Position Sensor

- Loosen and remove 2 Nos. Hex head bolts **(M6) (a)** along with bracket located below the FD sprocket **(b)**.

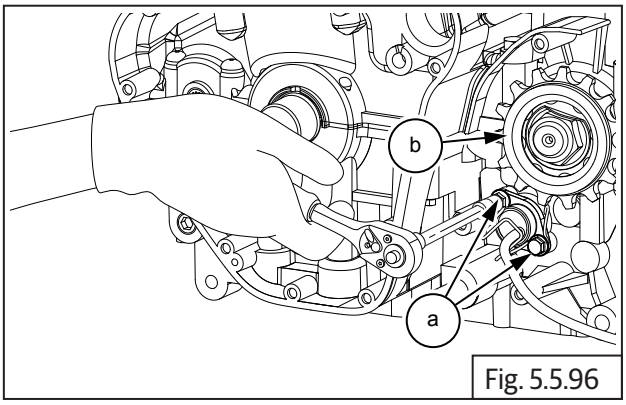

Fig. 5.5.96

	10 mm Socket with Ratchet

- Remove cable holder **(a)**.

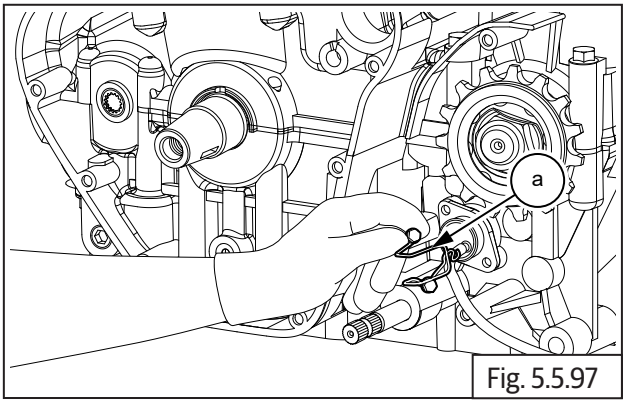

Fig. 5.5.97

- Gently remove gear position sensor **(a)** along with the gasket.

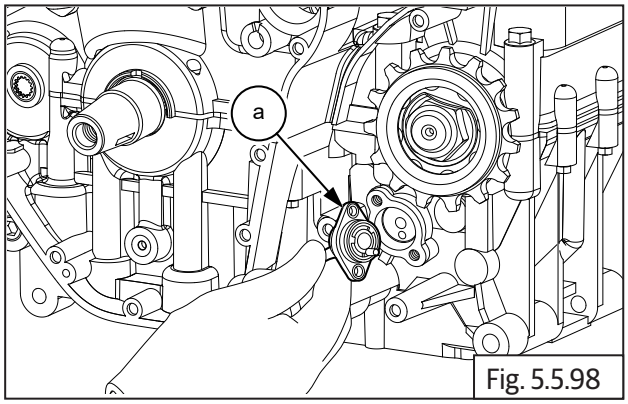

Fig. 5.5.98

5.5.30. FD Sprocket

- Tap to open lock tab holder **(a)** located over FD sprocket **(b)**.

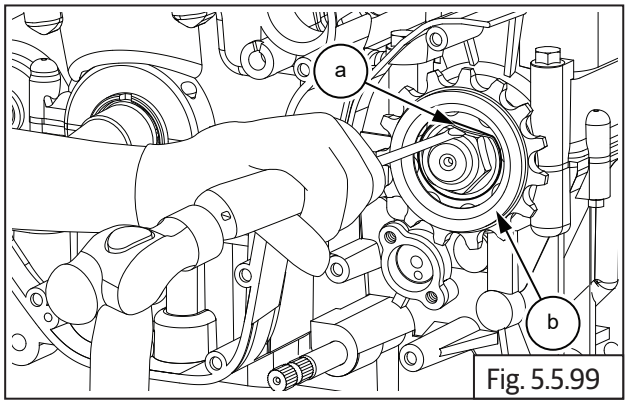

Fig. 5.5.99

	Chisel and Hammer

- Locate special tool over FD sprocket **(a)** and loosen "U" nut **(M20) (b)**.

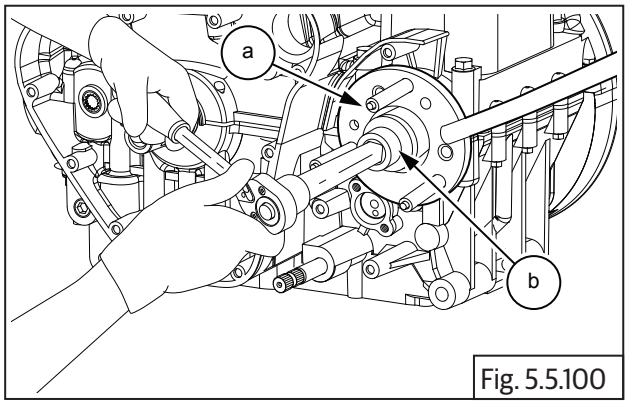

Fig. 5.5.100

 SPL	Part No: ST-27534-2
	Part Name: FD sprocket holder

	30 mm Socket with Ratchet

- Remove lock tab washer **(a)** from shaft.

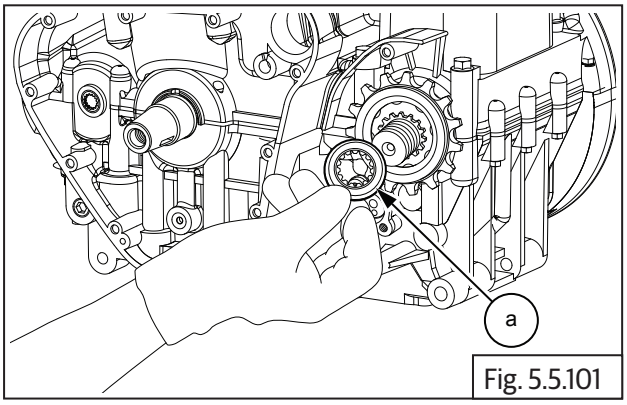

Fig. 5.5.101

- Remove FD sprocket **(a)** from drive shaft **(b)**.

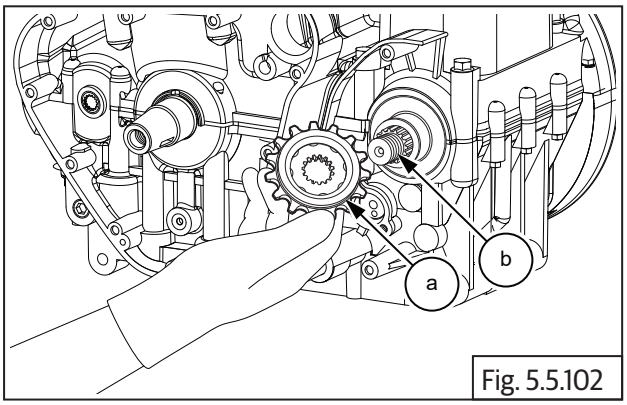

Fig. 5.5.102

- Gently remove spacer **(a)** from drive shaft.

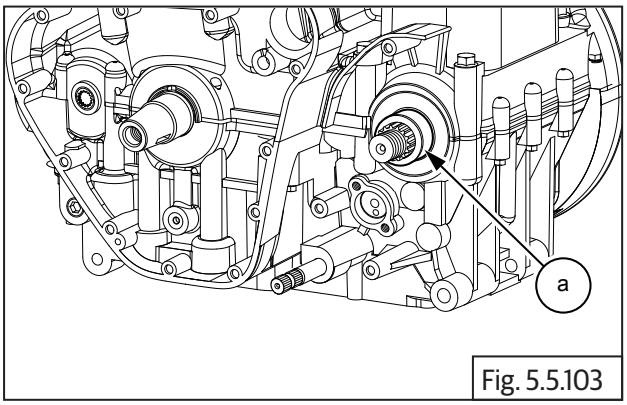

Fig. 5.5.103

⚠ CAUTION

Do not use sharp tool to remove spacer as it may damage the parts.

5.5.31. Cylinder Head

- Remove oil temperature sensor (section 10.1.8).

VV

⚠ CAUTION

Cylinder bolts and washers are one time usage only. Always use new head bolts and washersduring installation. Dispose old head bolts suitably.

- Loosen and remove 8 Nos. Hex head bolts **(M10) (a)** in crisscross pattern on cylinder head.

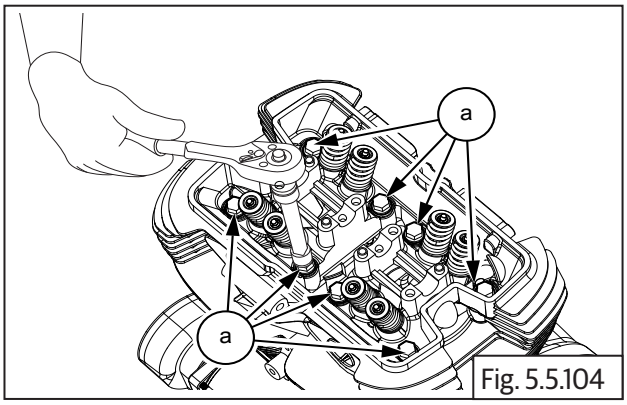

Fig. 5.5.104

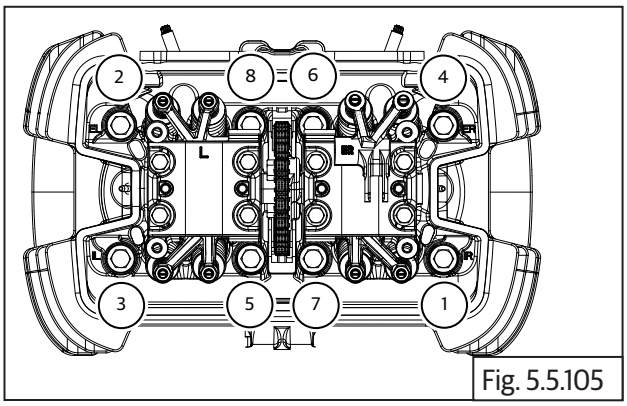

Fig. 5.5.105

	12 mm Socket with Ratchet

- Support cam chain suitably and gently remove cylinder head **(a)** from cylinder barrel **(b)**.

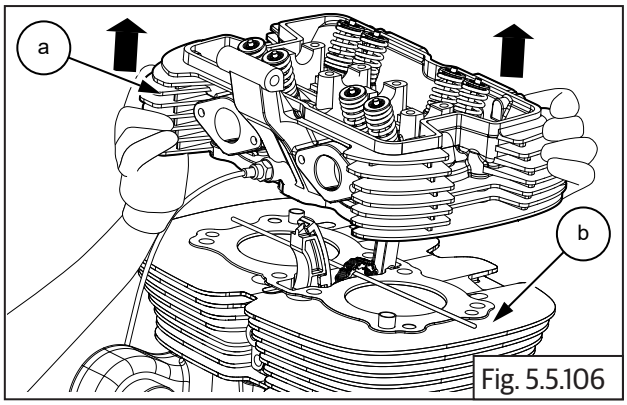

Fig. 5.5.106

- Remove the cylinder head gasket **(a)** from cylinder barrel **(b)**.

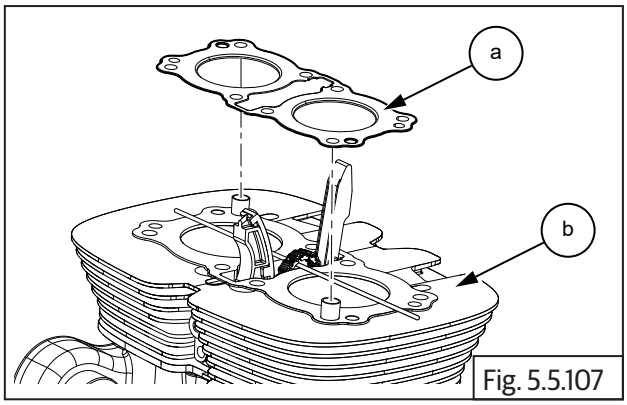

Fig. 5.5.107

5.5.32. Components from Cylinder Head

Valves and Springs

- Compress valve spring with special tool **(a)**.

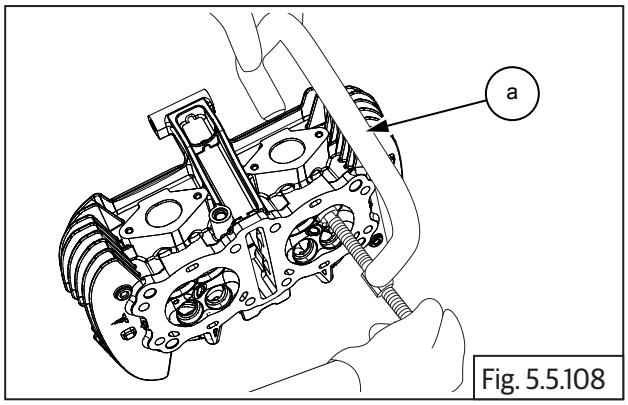

Fig. 5.5.108

SPL	Part No: ST-27528-2
	Part Name: Valve spring compressor

- Remove the cotters **(a)** on valve stem at the top.

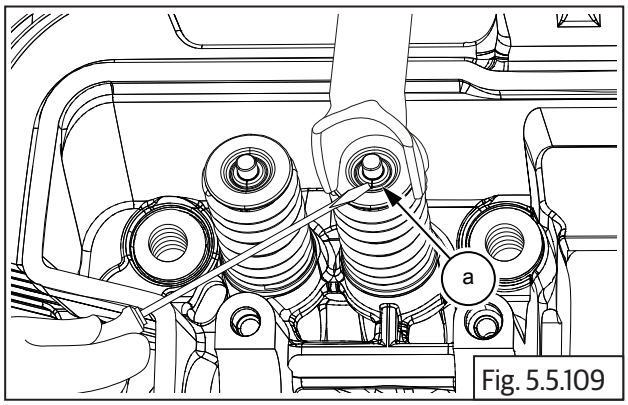

Fig. 5.5.109

SPL	Part No: ST-27528-2
	Part Name: Valve spring compressor

- Gently loosen the screw on valve spring compressor, till the valve spring tension is completely released and remove the special tool.

⚠ CAUTION

Valve spring under high tension when compressed .

Release valve spring compressor tool slowly and with care.

- Remove the retainer, valve spring **(a)** from the top of the valve spring **(b)**.

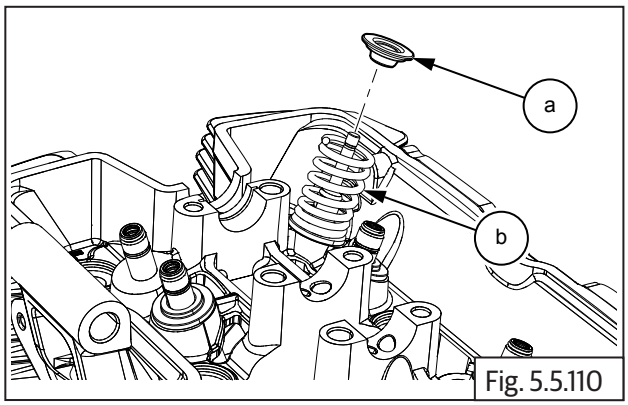

Fig. 5.5.110

- Remove valve spring **(a)** from valve stem **(b)**.

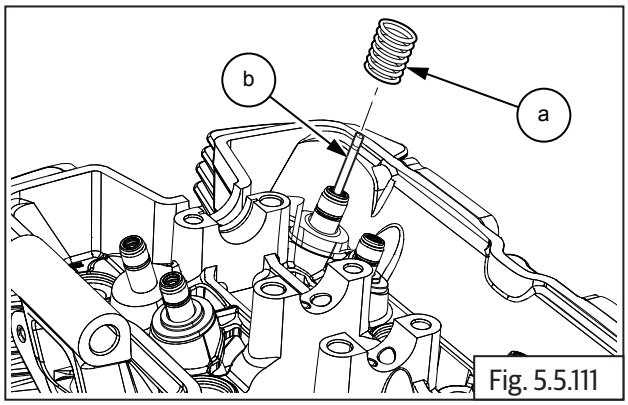

Fig. 5.5.111

- Remove valve **(a)** from cylinder head **(b)** by pulling it out from the cylinder head inside.

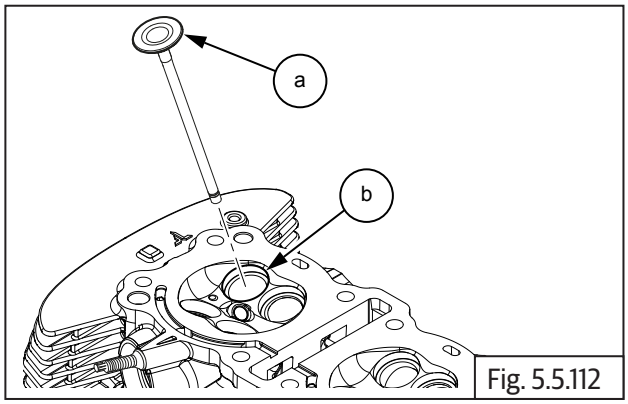

Fig. 5.5.112

- Remove valve stem seal **(a)** from valve guide **(b)**.

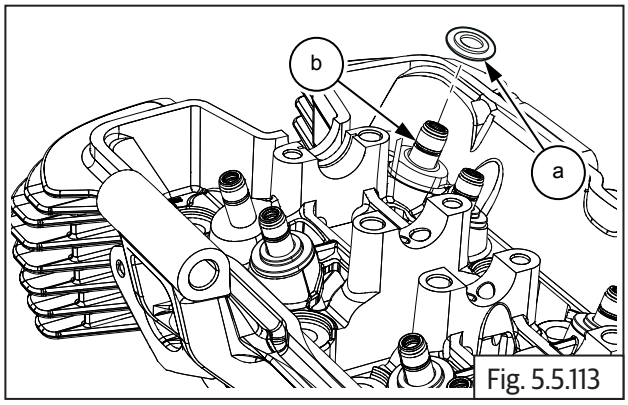

Fig. 5.5.113

- Follow the same procedure to remove the other valves from the cylinder head.

5.5.33. Floating Chain Pad

- Remove the floating chain pad **(a)** from front end of the cylinder barrel.

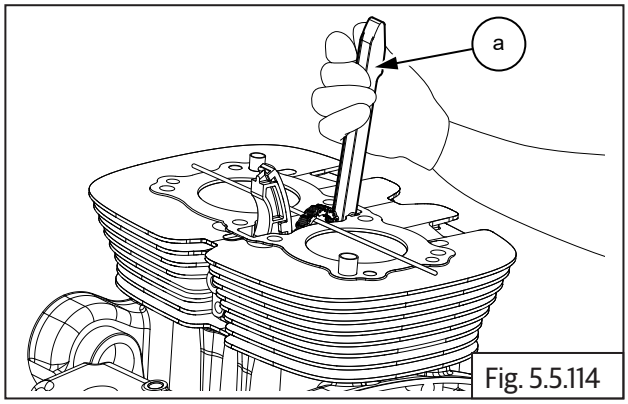

Fig. 5.5.114

5.5.34. Cylinder Barrel

- Slightly tilt and gently remove the cylinder barrel **(a)** from crankcase **(b)**.

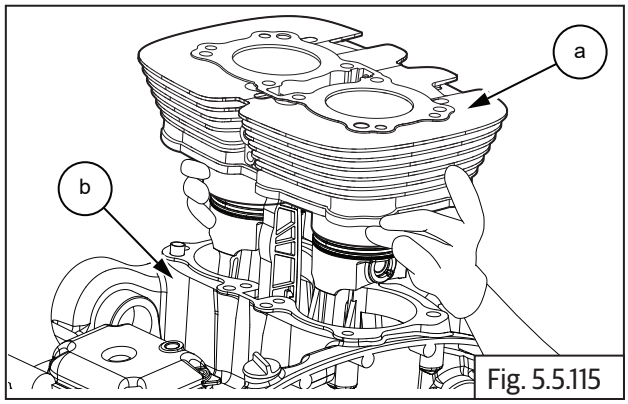

Fig. 5.5.115

5.5.35. Pistons

- Remove the circlip **(a)** from piston.

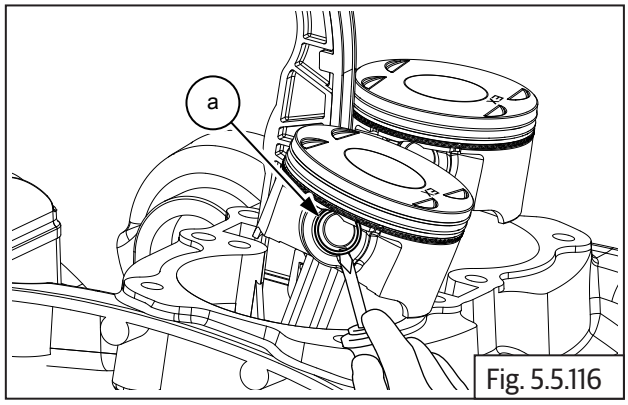

Fig. 5.5.116

	Screw driver

- Gently push out the gudgeon pin **(a)** to release the piston.

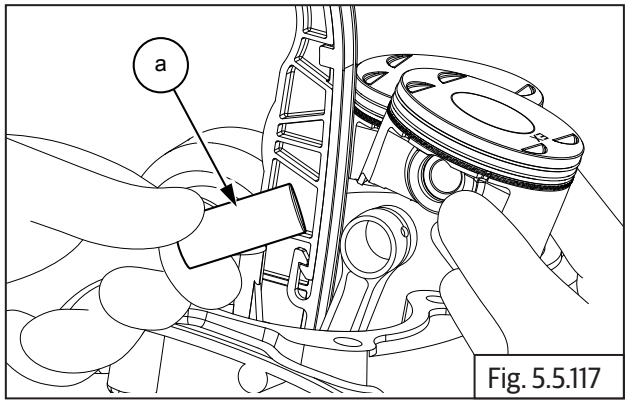

Fig. 5.5.117

- Repeat the procedure for other piston.

5.5.36. Oil Pressure Switch

- Loosen and remove pressure switch **(a)** along with washers **(b)** from bottom of the crankcase RH.

NOTE
• *Washer to be replaced whenever removed. Do not reuse the washer.*

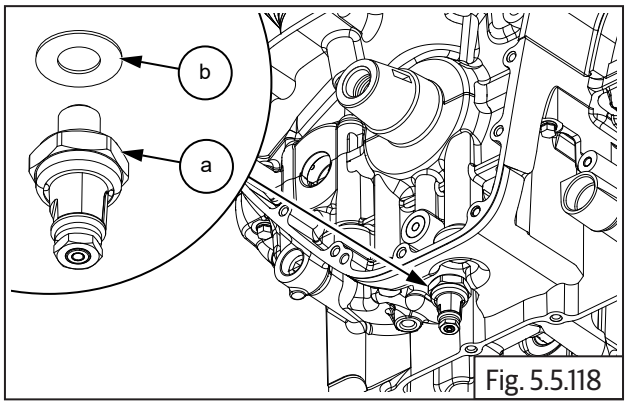

Fig. 5.5.118

	21 mm Socket with Ratchet

5.5.37. Oil Pan

- Support upper crankcase on suitable wedges such that the oil pan is facing upwards.
- Loosen and remove the 13 Nos. Hex bolts **(M6) (a)** in crisscross pattern from sump.

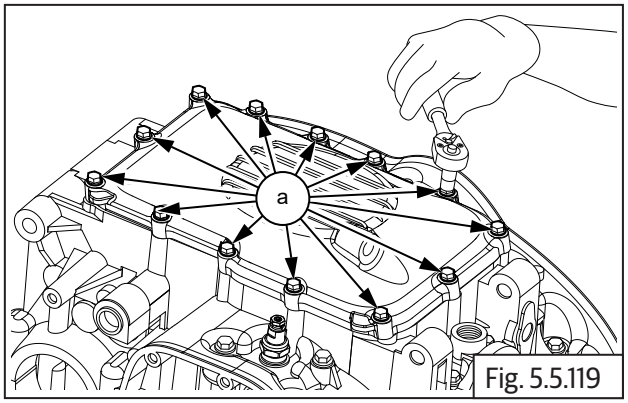

Fig. 5.5.119

	10 mm Socket with Ratchet

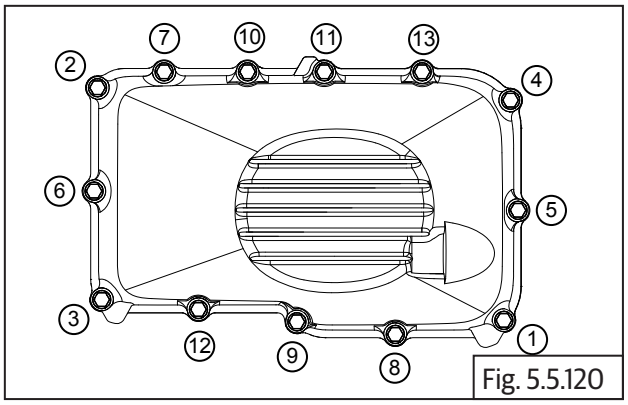

Fig. 5.5.120

- Remove sump cover **(a)** along with gasket **(b)** from bottom crankcase.

Crankcase Bolts Slackening Sequence Procedure

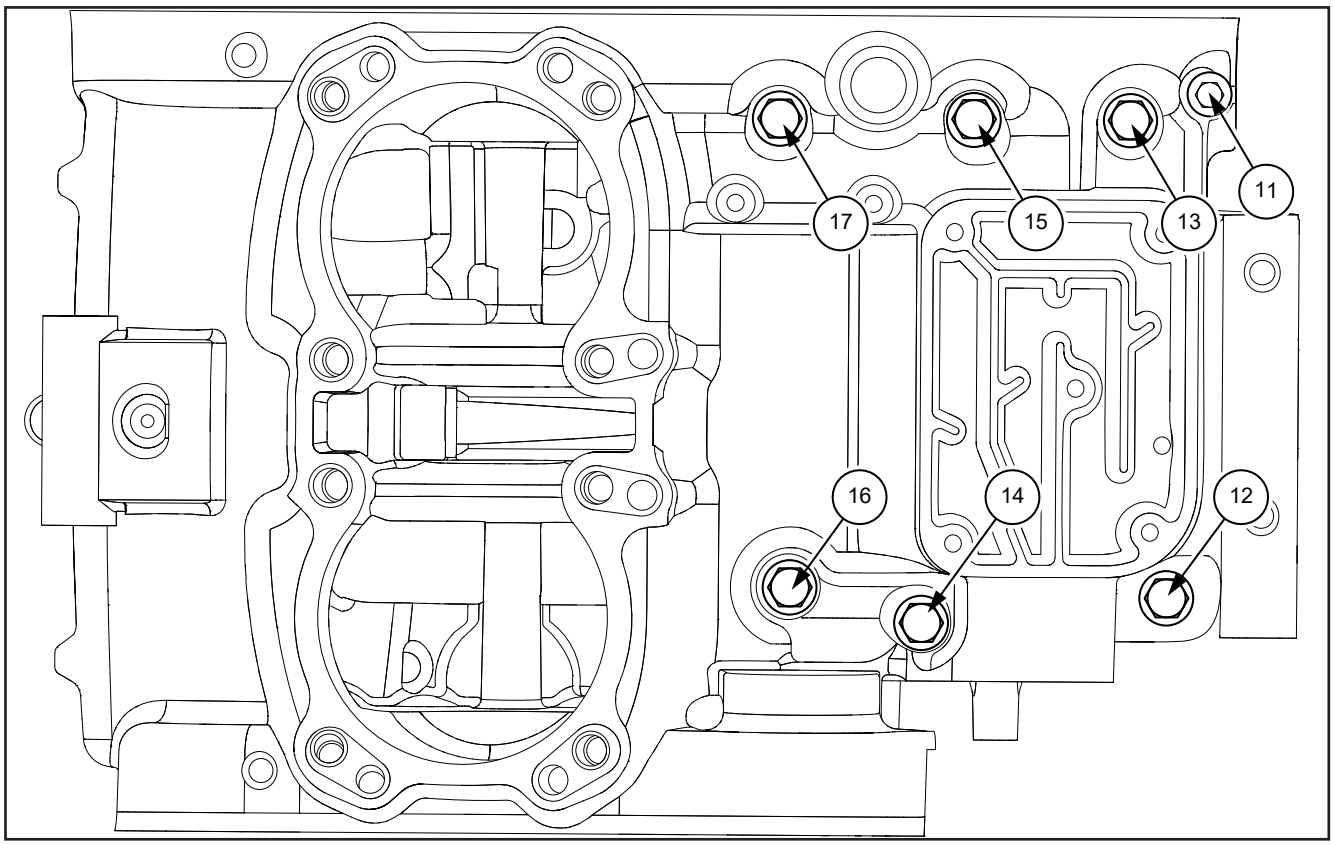

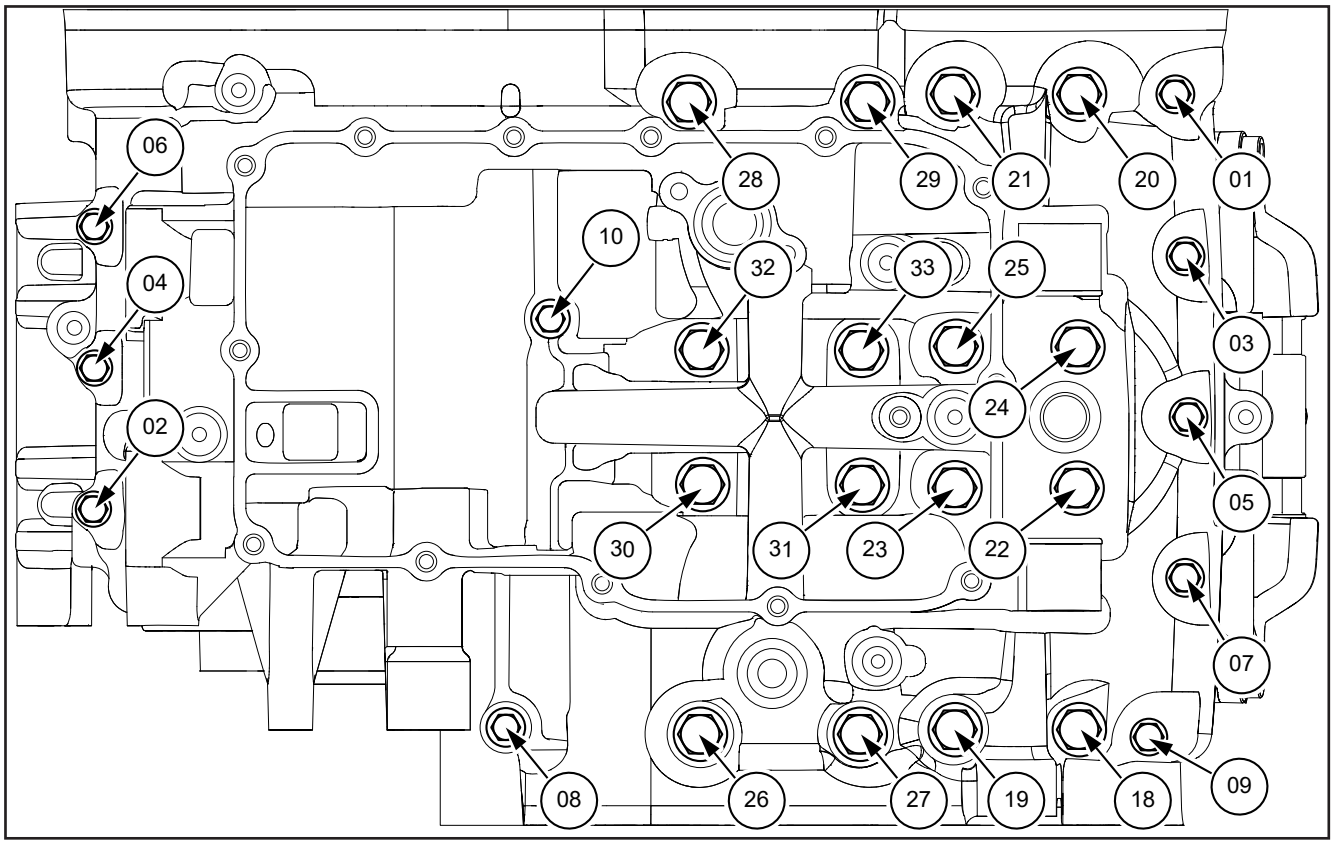

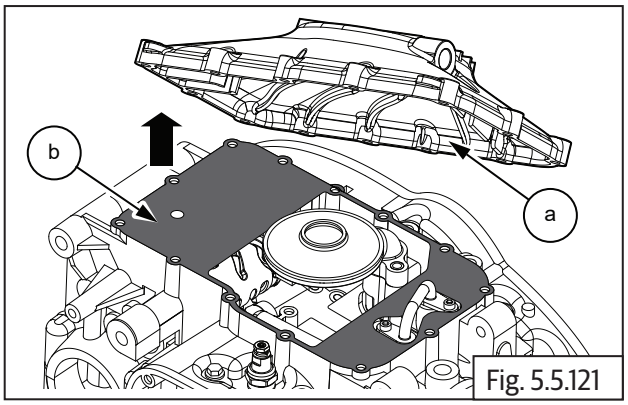

Fig. 5.5.121

5.5.38. Oil Strainer

- Loosen and remove 2 Nos. Hex flange head bolts **(M6) (a)** to remove oil strainer **(b)** along with O-ring **(c)**.

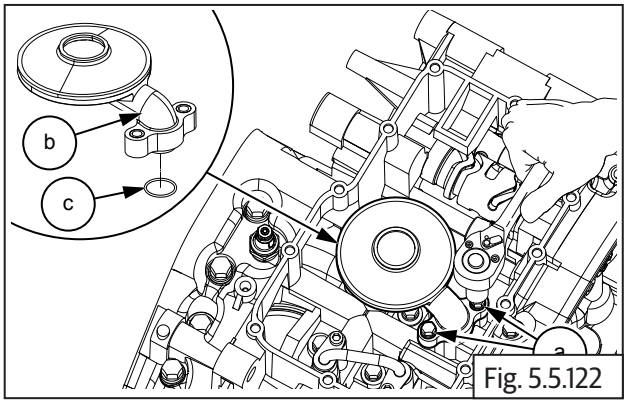

Fig. 5.5.122

	10 mm Socket with Ratchet

⚠ CAUTION

Do not reuse O-ring. Always use new O-ring during installation.

5.5.39. Oil Bypass

- Loosen and remove Hex socket head cap screw **(M6) (a)** to remove bypass **(b)** from crankcase.
- Remove the O - rings with the bypass pipe.

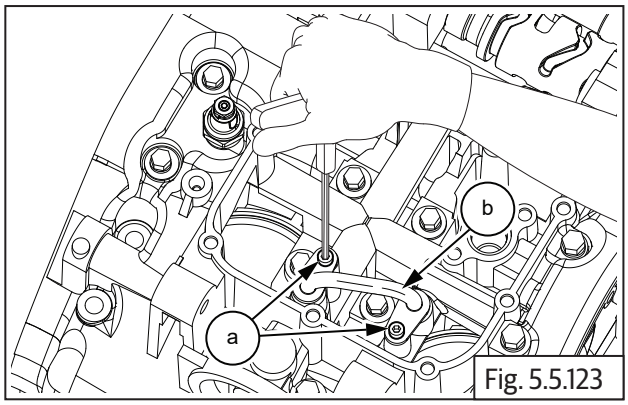

Fig. 5.5.123

5.5.40. Crankcase Fasteners on Upper Crankcase

Description	Quantity
M8 x 1.25 x 80	3
M8 x 1.25 x 105	2
M6 x 1.25 x 35	1
M8 x 1.25 x 45	1

- Support crankcase assembly on suitable wedges such that the fasteners on the upper crankcase can be removed.
- Loosen and remove 2 Nos. Hex flange bolts **M8 X 1.25 X 105 (a)** near oil filler hole on RH side (clutch side) of upper crankcase.

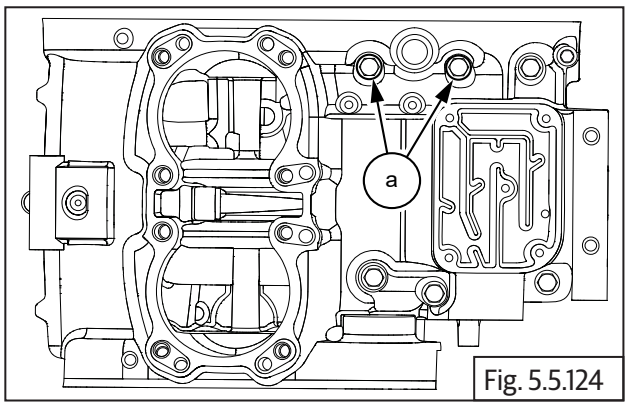

Fig. 5.5.124

	13 mm Socket with Ratchet

- Loosen and remove 1 No. Hex flange bolt **M8 X 1.25 X 80 (a)** near breather box housing on RH side (clutch side) of upper crankcase.

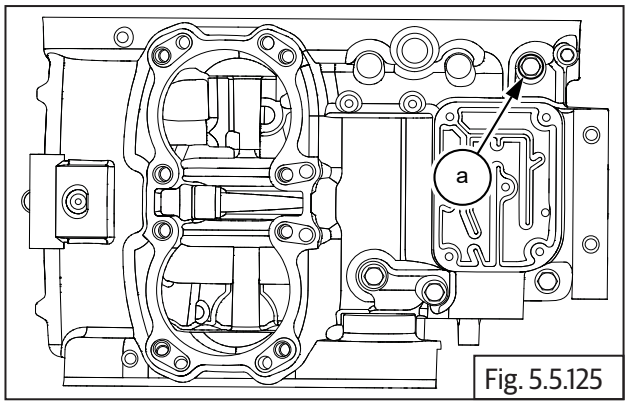

Fig. 5.5.125

	13 mm Socket with Ratchet

- Loosen and remove 1 No. Hex flange bolt **M6 X 1 X 35 (a)** from the rear RH side (clutch side) of upper crankcase.

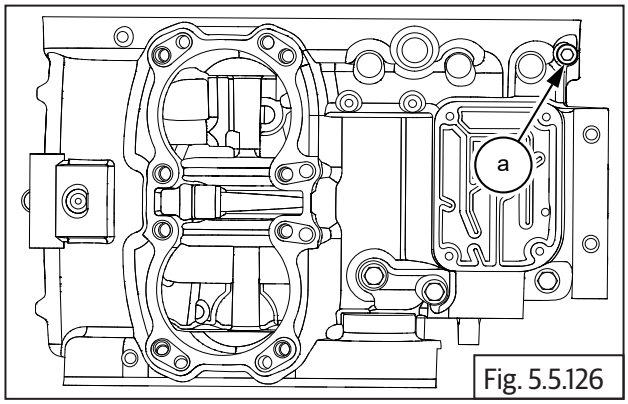

Fig. 5.5.126

	8 mm Socket with Ratchet

- Loosen and remove 1 No. Hex flange bolt **M8 X 1.25 X 45 (a)** from starter motor recess on LH side (magneto side) of upper crankcase.

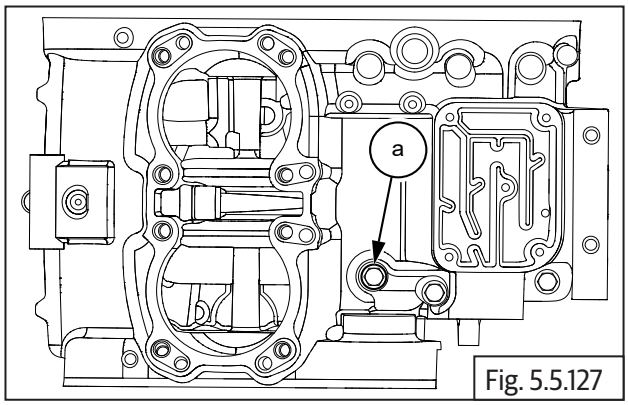

Fig. 5.5.127

	13 mm Socket with Ratchet

- Loosen and remove 2 Nos. Hex flange bolt **M8 X 1.25 X 80 (a)** (1 each from starter motor recess and FD sprocket spigot area) on LH side (magneto side) of upper crankcase.

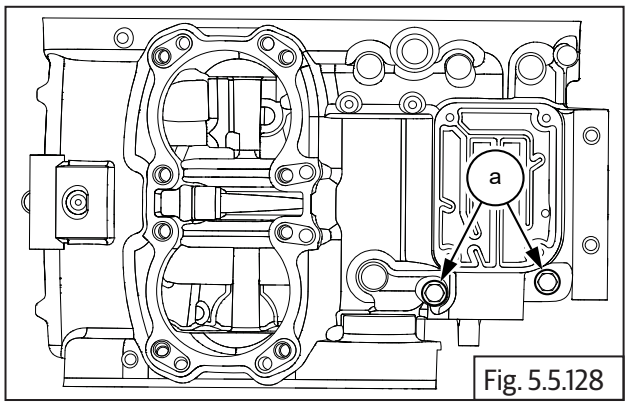

Fig. 5.5.128

	13 mm Socket with Ratchet

Fasteners on Lower Crankcase

Description	Quantity
M6 x 1.25 x 35	8
M8 x 1.25 x 80	9
M8 x 1.25 x 120	5
M6 x 1.25 x 85	1
M6 x 1.25 x 55	1
M8 x 1.25 x 150	2

- Gently invert crankcase assembly such that the upper crankcase is resting firmly on suitable wedges and the fasteners from lower crankcase can be removed.
- Loosen and remove 5 Nos. Hex flange bolts **M6 X 1 X 35 (a)** from the front end of lower crankcase.

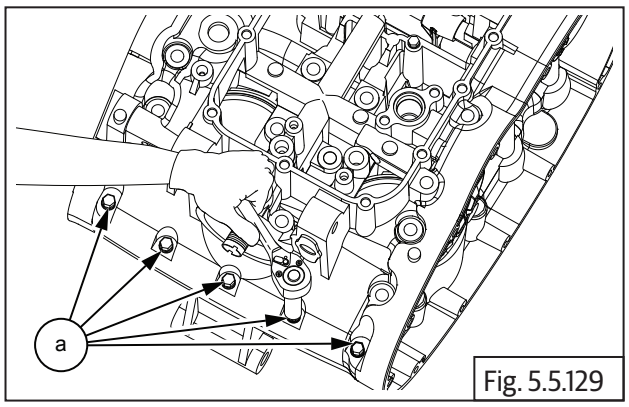

Fig. 5.5.129

	8 mm Socket with Ratchet

- Loosen and remove 3 Nos. Hex flange bolts **M6 X 1 X 35 (a)** from the rear end of lower crankcase.

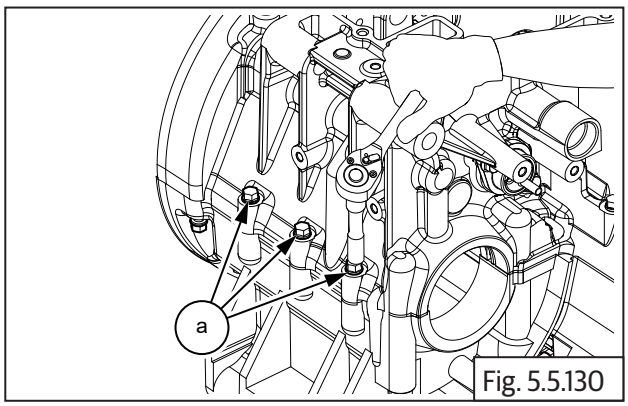

Fig. 5.5.130

	8 mm Socket with Ratchet

- Loosen and remove 6 Nos. Hex flange bolts **M8 X 1.25 X 80 (a)** in crisscross pattern from the centre of lower crankcase inside oil sump area.

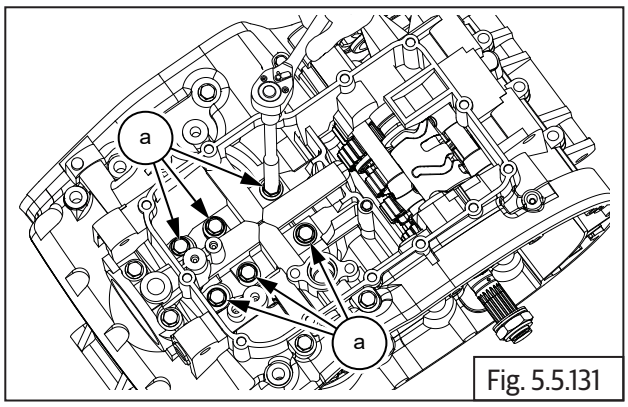

Fig. 5.5.131

	13 mm Socket with Ratchet

- Loosen and remove 2 Nos. Hex flange bolts **M8 X 1.25 X 120 (a)** from oil filter element mounting area in the lower crankcase front side.

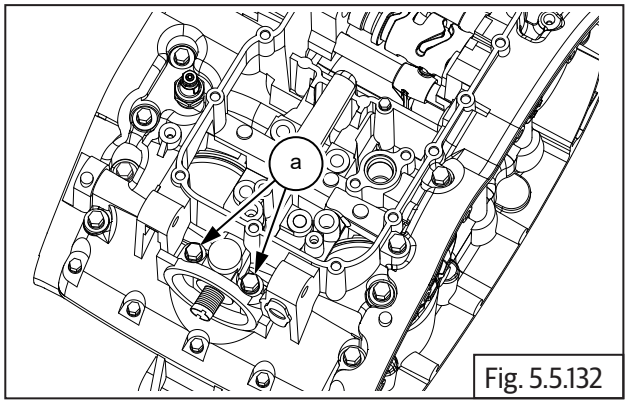

Fig. 5.5.132

	13 mm Socket with Ratchet

- Loosen and remove 1 No. Hex flange head bolt **M6 X 1 X 85 (a)** from the centre of lower crankcase inside oil sump area.

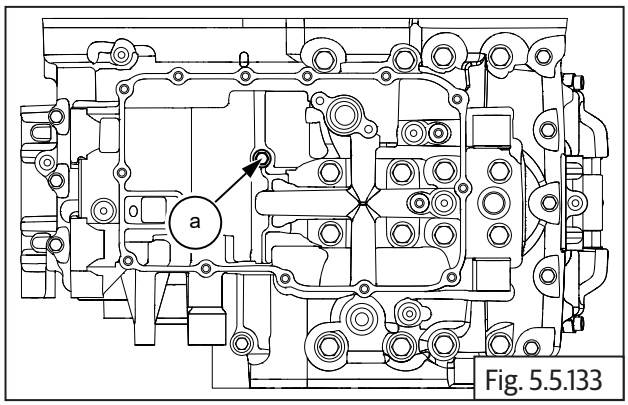

Fig. 5.5.133

	8 mm Socket with Ratchet

- Loosen and remove 1 No. Hex flange head bolt **M6 X 1 X 55 (a)** from the lower crankcase LH side (Magneto side).

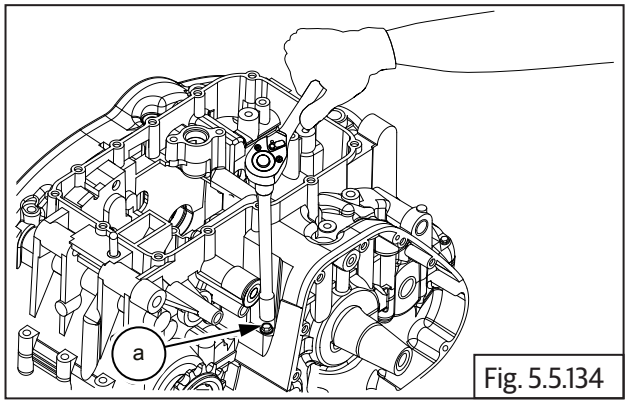

Fig. 5.5.134

	8 mm Socket with Ratchet

- Loosen and remove 2 Nos. Hex flange bolts **M8 X 1.25 X 150 (a)** from the lower crankcase LH side (Magneto side).

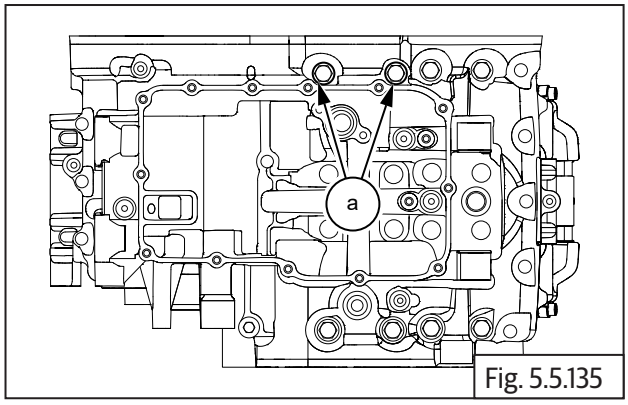

Fig. 5.5.135

	13 mm Socket with Ratchet

- Loosen and remove 1 No. Hex flange bolt **M8 X 1.25 X 120 (a)** from the lower crankcase LH side (Magneto side).

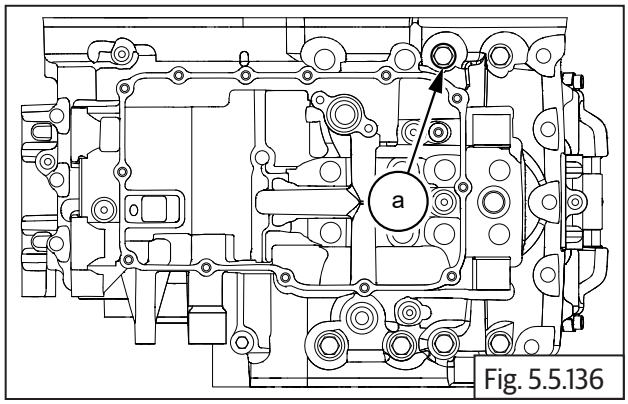

Fig. 5.5.136

	13 mm Socket with Ratchet

- Loosen and remove 1 No. Hex flange bolt **M8 X 1.25 X 80 (a)** from the lower crankcase LH side (Magneto side).

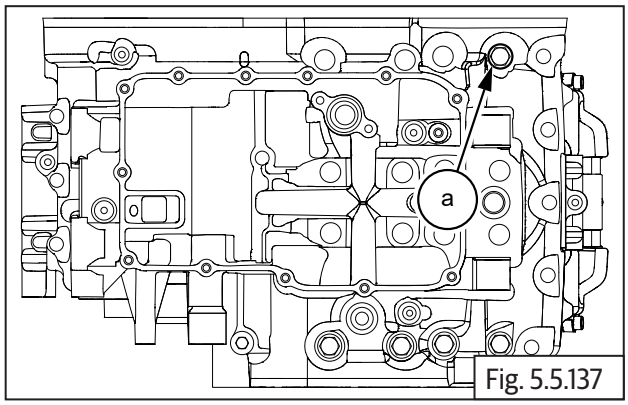

Fig. 5.5.137

	13 mm Socket with Ratchet

- Loosen and remove 2 Nos. Hex flange bolts **M8 X 1.25 X 120 (a)** from the lower crankcase RH side (clutch side).

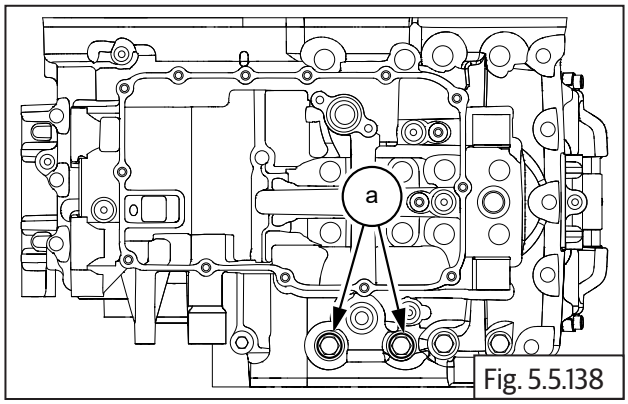

Fig. 5.5.138

	13 mm Socket with Ratchet

- Loosen and remove 2 Nos. Hex flange bolts **M8 X 1.25 X 80 (a)** from the lower crankcase RH side (clutch side).

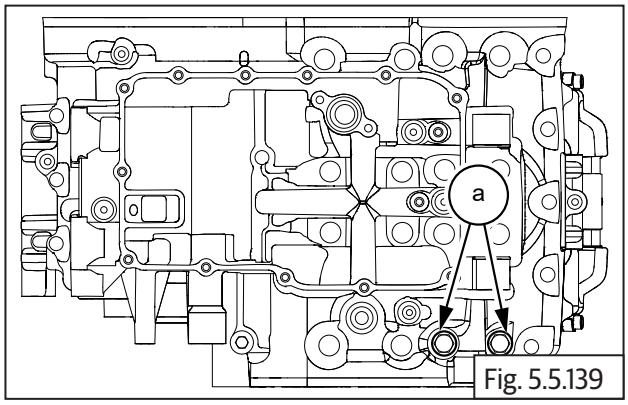

Fig. 5.5.139

	13 mm Socket with Ratchet

5.5.41. Splitting Crankcase

- Ensure the upper crankcase is supported firmly on suitable wedges with the lower crankcase facing upwards.
- Gently separate the lower crankcase from the upper crankcase by slightly tapping on the tabs **(a)** provided in lower crankcase, to release from the dowels and sealing gasket material.

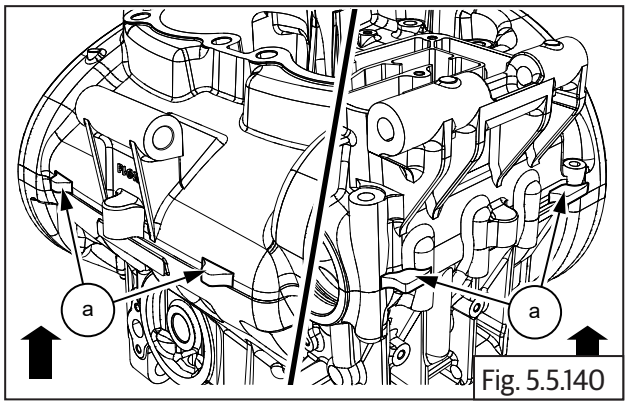

Fig. 5.5.140

- Remove lower crankcase along with the gear selector drum, from the upper crankcase.

⚠ CAUTION

Ensure all the mounting fasteners on the lower and upper crankcase have been removed.

Ensure the gear shift forks are not jammed in the grooves in the gears.

Ensure the dowels are removed from the upper and lower crankcases.

Main M8 bolts and washers 16 nos are non reusable

5.5.42. Balancer Shaft

- Gently lift and remove balancer shaft **(a)** from upper crankcase **(b)**.

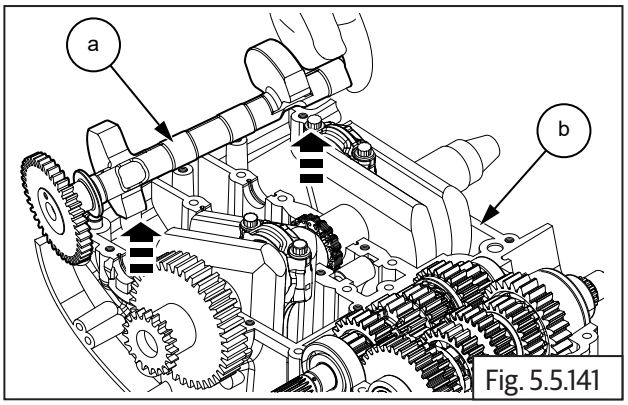

Fig. 5.5.141

5.5.43. Timing Chain Tensioner Pad

- Gently pull out timing chain tensioner pad **(a)** from crankcase.

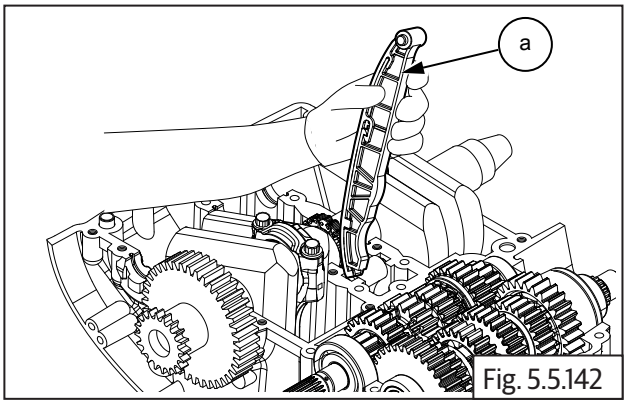

Fig. 5.5.142

5.5.44. Connecting Rod

- Loosen and remove 2 Nos. bi-hexagonal bolts **(M9) (a)** to disconnect connecting rod big end **(b)** from crankshaft **(c)**.

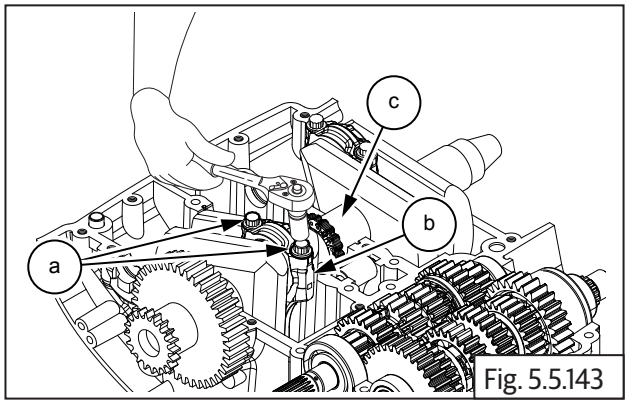

Fig. 5.5.143

	13 mm Bi-Hexgonal Socket with Ratchet

- Split the connecting rod's big end.

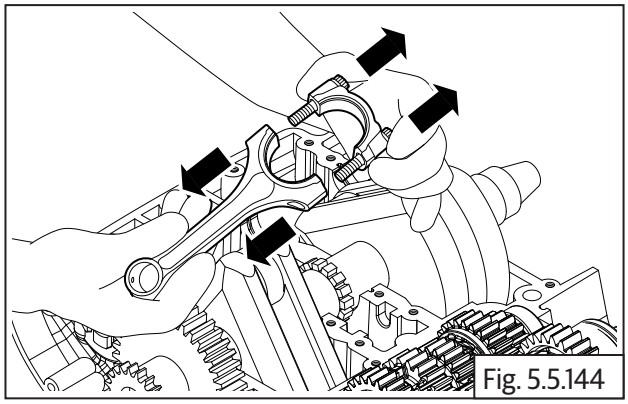
Fig. 5.5.144

- Repeat same procedure for other connecting rod.

NOTE
• *Make sure to mark connecting rod suitably to retain original position during installation.*

5.5.45. Crankshaft Assembly

⚠ CAUTION
Crankcase and connecting rod bolts are one time use only. **Bolts are non reusable**

- Gently lift and remove crankshaft assembly **(a)** from crankcase along with the cam chain **(b)**.

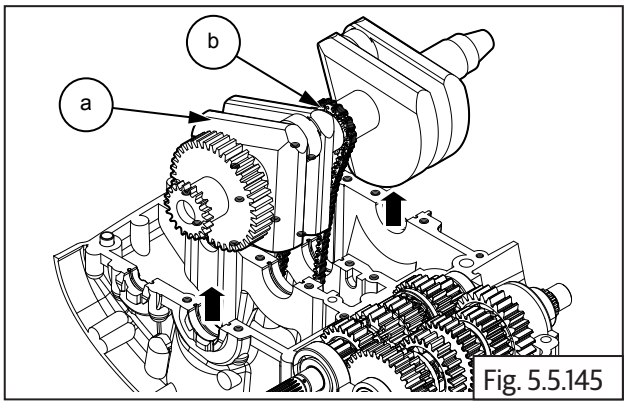

Fig. 5.5.145

- Release cam chain from the sprocket on the center of the crankshaft and remove.

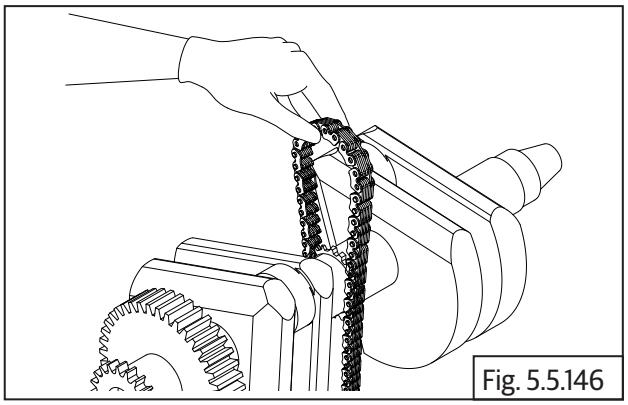
Fig. 5.5.146

5.5.46. Countershaft

- Gently lift to remove transmission countershaft with gear assembly **(a)** from upper crankcase **(b)**.

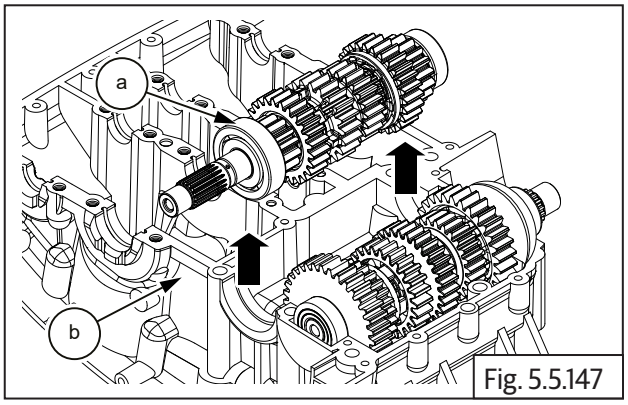

Fig. 5.5.147

- Remove the bearing **(a)** from the countershaft

smaller end **(b)**.

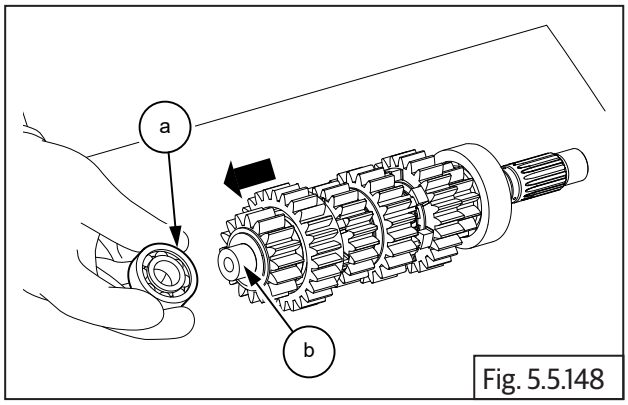

Fig. 5.5.148

- Remove thrust washer **(a)** from countershaft **(b)**.

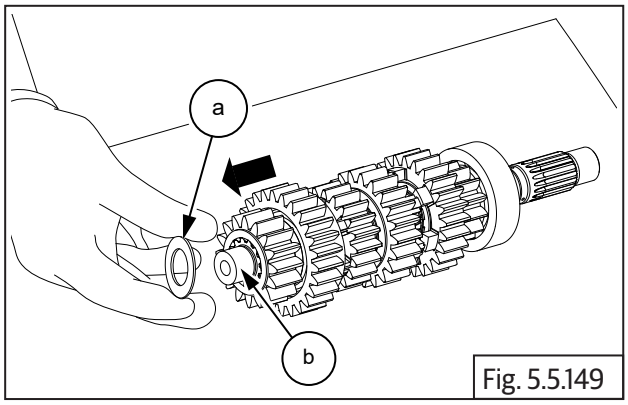

Fig. 5.5.149

- Remove the 2nd gear (16 teeth) **(a)** from the countershaft **(b)**.

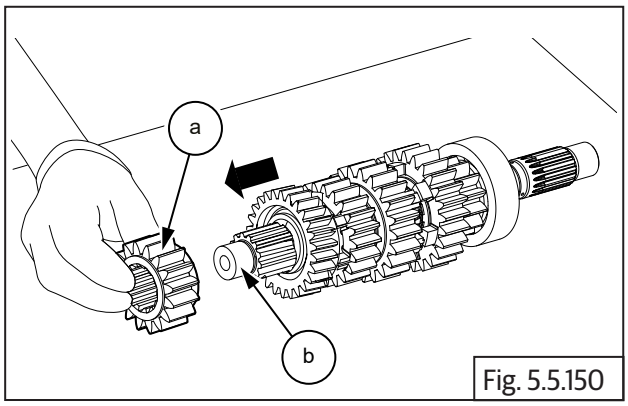

Fig. 5.5.150

- Remove the 6th gear (26 teeth) **(a)** from the countershaft **(b)**.

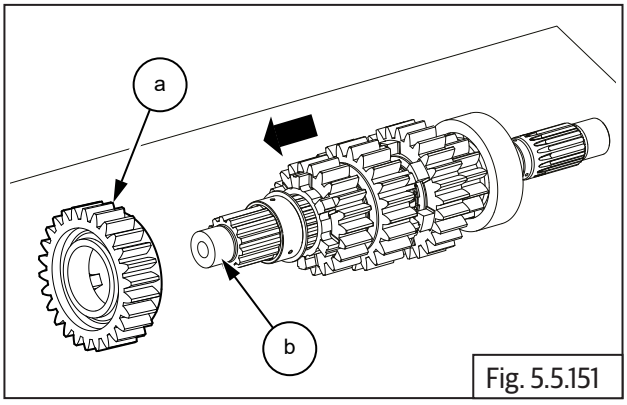

Fig. 5.5.151

- Remove plain bush **(a)** from the countershaft **(b)**.

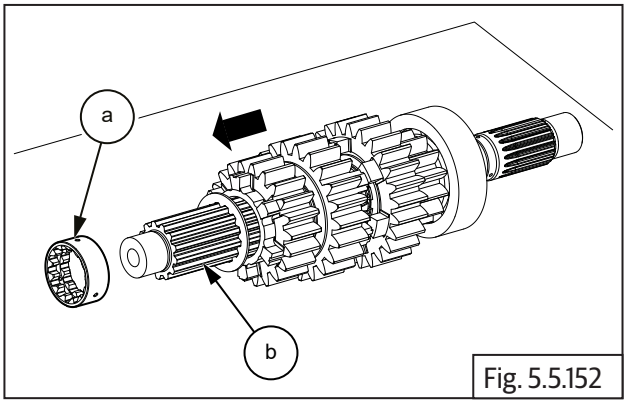

Fig. 5.5.152

- Remove the splined washer **(a)** from the countershaft **(b)**.

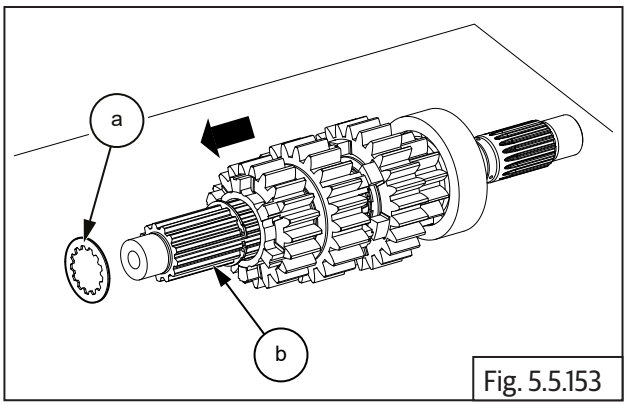

Fig. 5.5.153

- Remove the outer circlip **(a)** from the countershaft **(b)**.

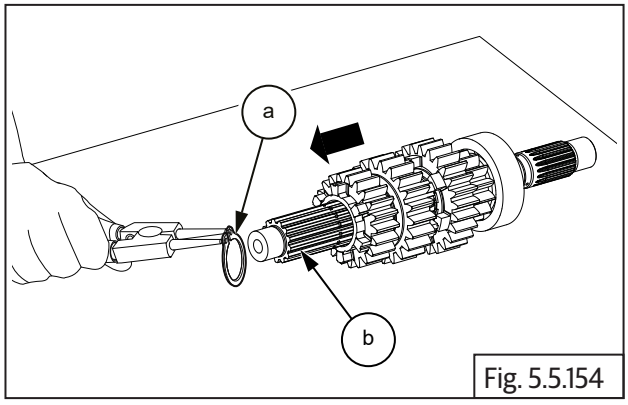

Fig. 5.5.154

	Circlip plier

- Remove the 3rd and 4th double gears **(a)** from the countershaft **(b)**.

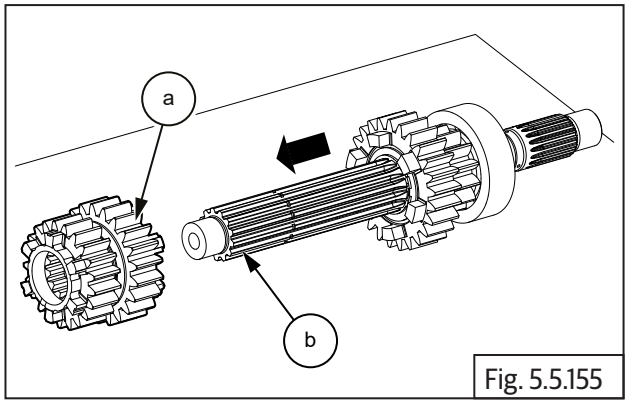

Fig. 5.5.155

- Remove the inner circlip **(a)** from the countershaft **(b)**.

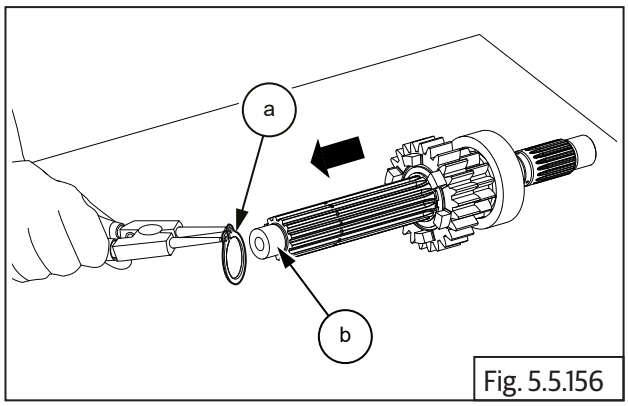

Fig. 5.5.156

	Circlip plier

- Remove the thrust washer **(a)** from countershaft **(b).**

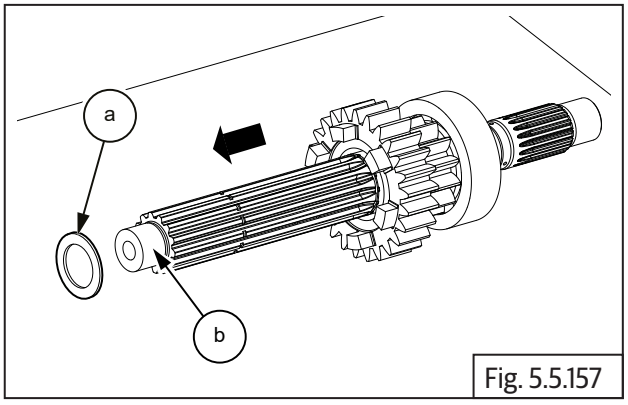

Fig. 5.5.157

- Remove the plain bush **(a)** from the countershaft **(b)**.

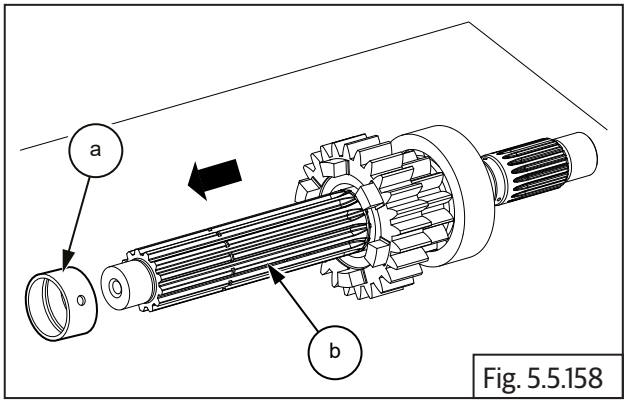

Fig. 5.5.158

- Remove the 5th gear (24 teeth) **(a)** from the countershaft **(b)**.

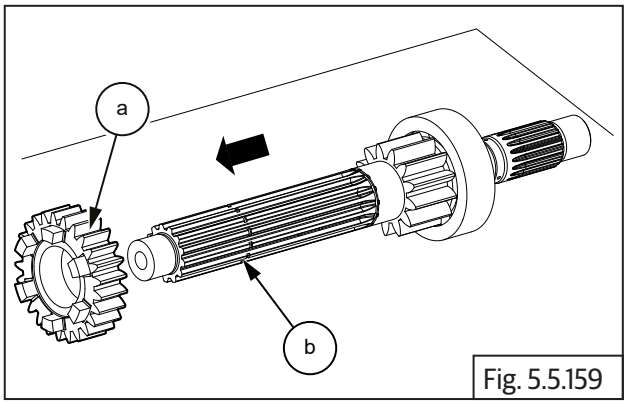

Fig. 5.5.159

5.5.47. Driveshaft

- Gently lift and remove driveshaft with gear assembly **(a)** from upper crankcase **(b)**.

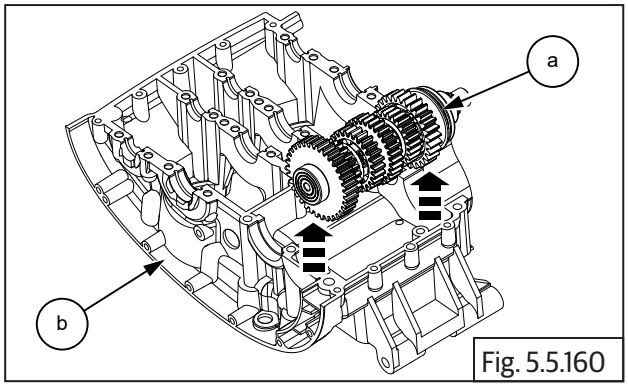

Fig. 5.5.160

- Remove bearing **(a)** from non splined end of driveshaft **(b)**.

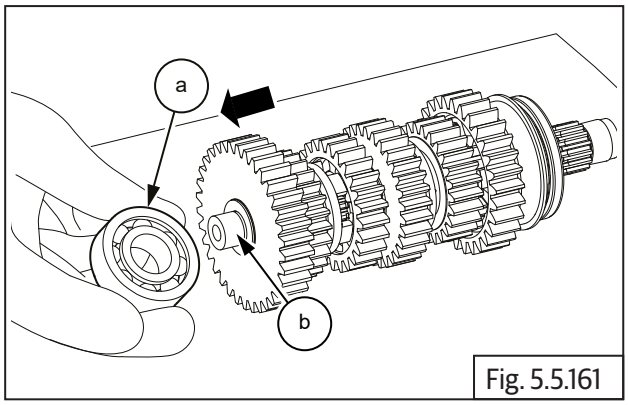

Fig. 5.5.161

- Remove thrust washer **(a)** from non splined end of driveshaft **(b)**.

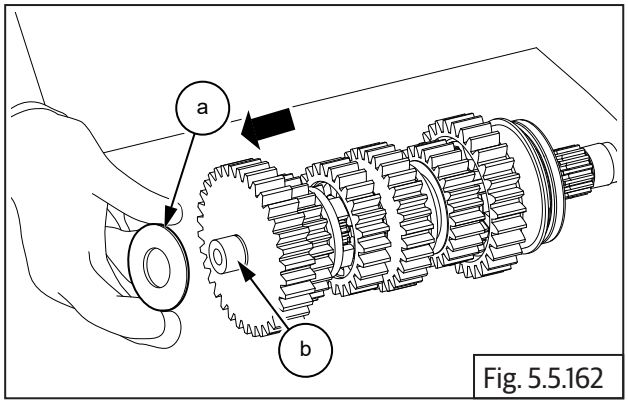

Fig. 5.5.162

- Remove 1st gear **(a)** from non splined end end of driveshaft **(b)**.

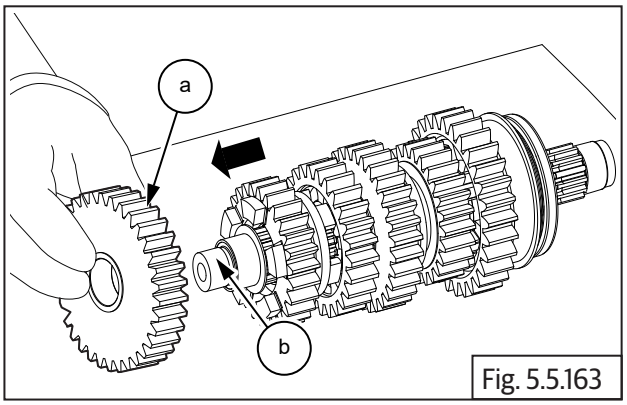

Fig. 5.5.163

- Remove splined bush **(a)** from driveshaft **(b)**.

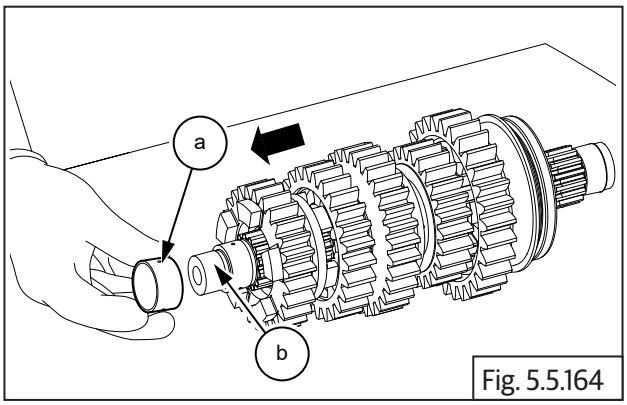

Fig. 5.5.164

- Remove thrust washer **(a)** from driveshaft **(b)**.

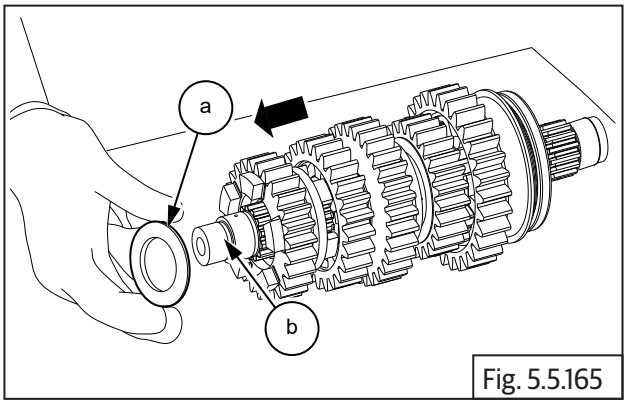

Fig. 5.5.165

- Remove 5th gear **(a)** from the driveshaft **(b)**.

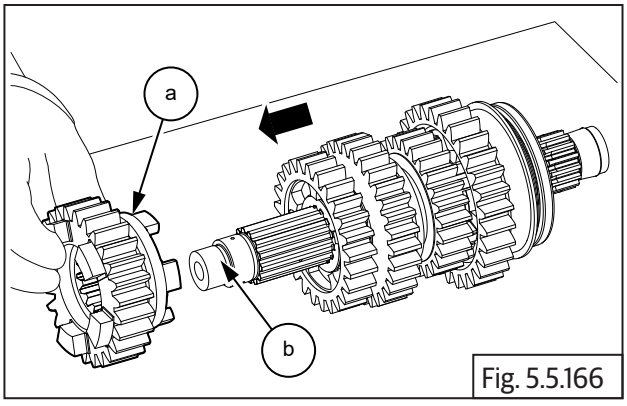

Fig. 5.5.166

- Remove 4th circlip **(a)** from groove in the driveshaft **(b)**.

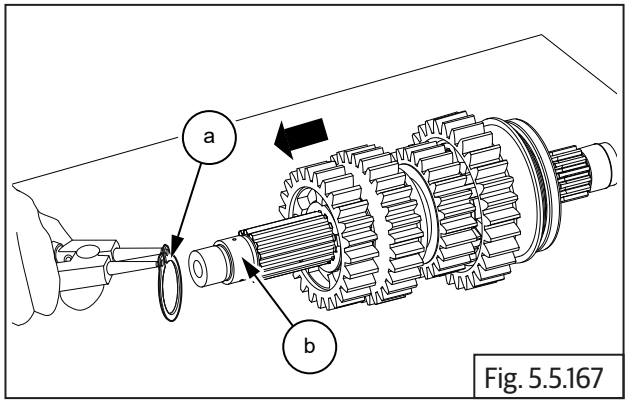

Fig. 5.5.167

	Circlip plier

- Remove splined thrust washer **(a)** from driveshaft **(b)**.

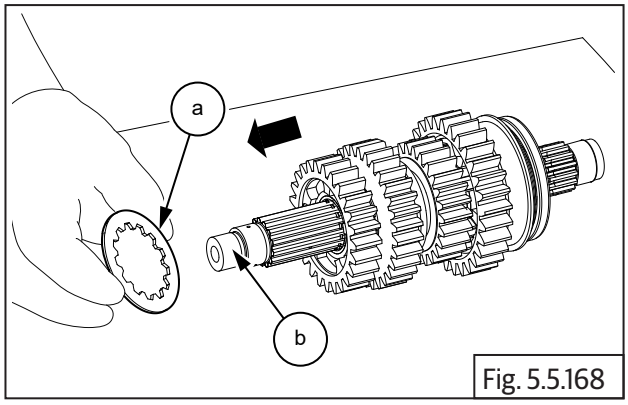

Fig. 5.5.168

- Remove 4th gear **(a)** from driveshaft **(b)**.

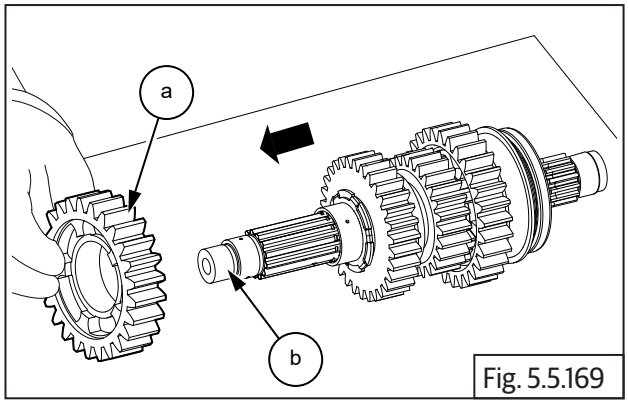

Fig. 5.5.169

- Remove splined bush **(a)** driveshaft **(b)**.

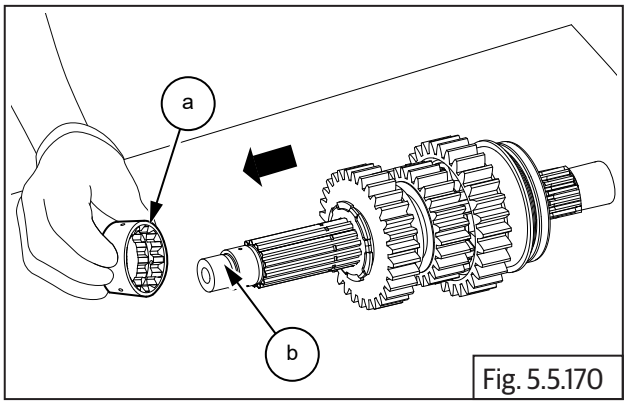

Fig. 5.5.170

- Remove the splined lock washer **(a)** from driveshaft **(b)**.

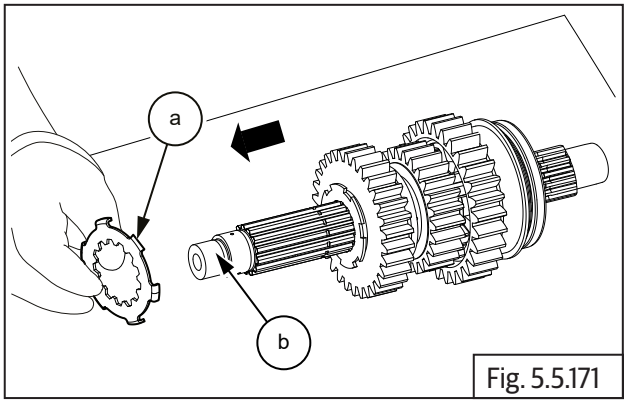

Fig. 5.5.171

- Rotate thrust washer **(a)** such that the inner splines aligned to the splines on the driveshaft and remove from driveshaft **(b)**.

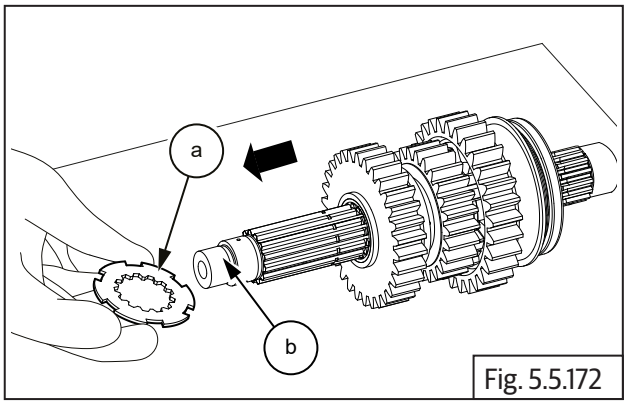

Fig. 5.5.172

- Remove 3rd gear **(a)** from driveshaft **(b)**.

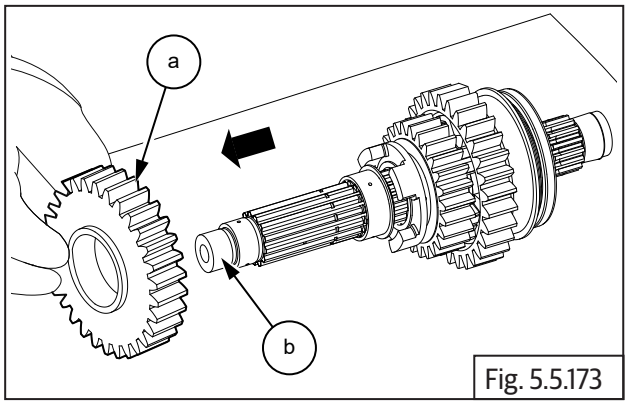

Fig. 5.5.173

- Remove splined bush **(a)** from driveshaft **(b)**.

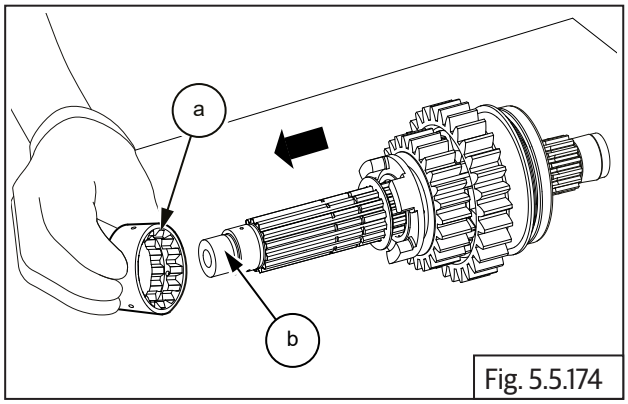

Fig. 5.5.174

- Remove splined thrust washer **(a)** driveshaft **(b)**.

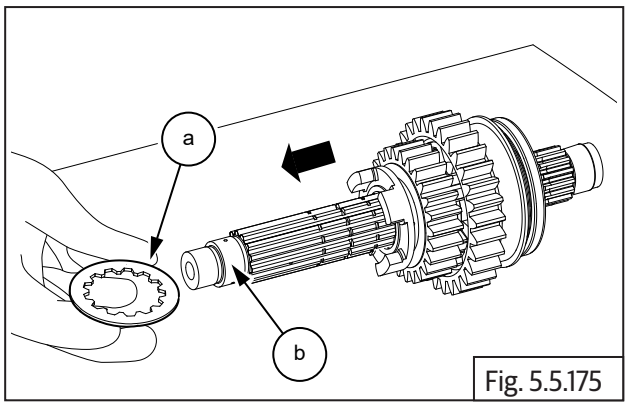

Fig. 5.5.175

- Remove 2nd circlip **(a)** from groove on driveshaft **(b)**.

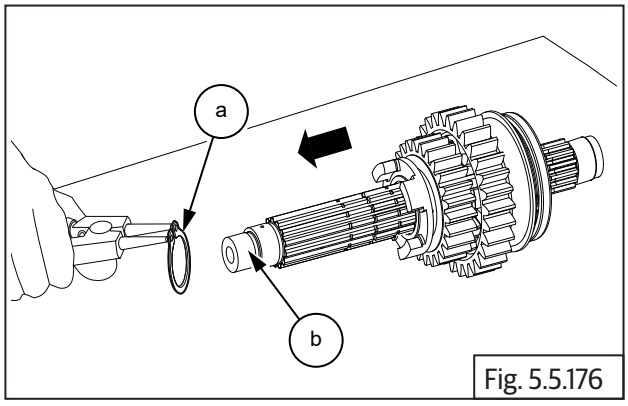

Fig. 5.5.176

	Circlip plier

- Remove 6th gear **(a)** from driveshaft **(b)**.

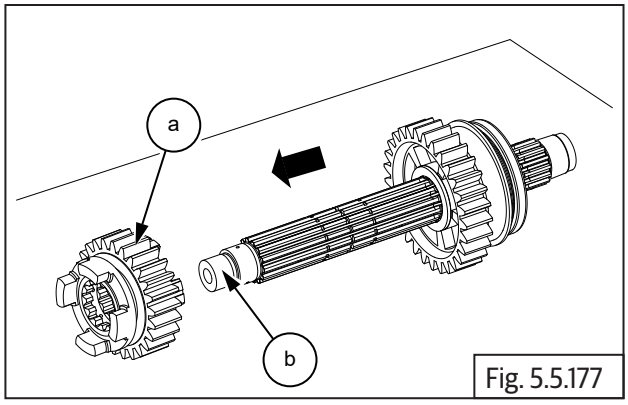

Fig. 5.5.177

- Remove 1st circlip **(a)** from groove on driveshaft **(b)**.

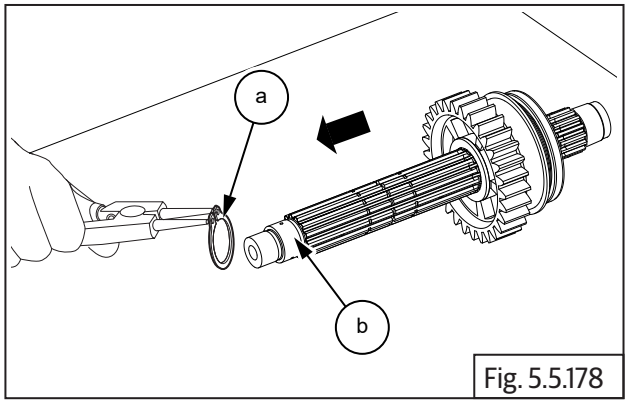

Fig. 5.5.178

	Circlip plier

- Remove collar bush **(a)** from driveshaft **(b)**.

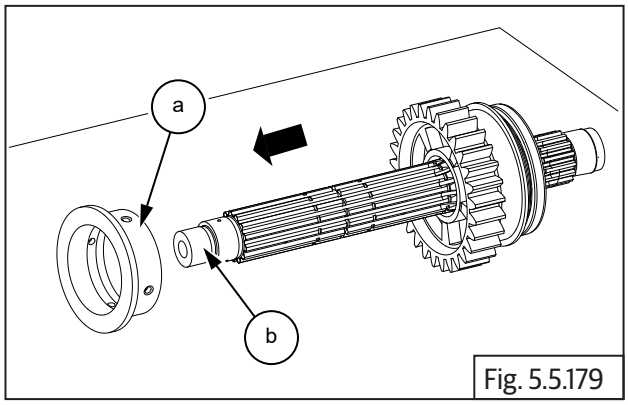

Fig. 5.5.179

- Remove the 2nd gear **(a)** from driveshaft **(b)**.

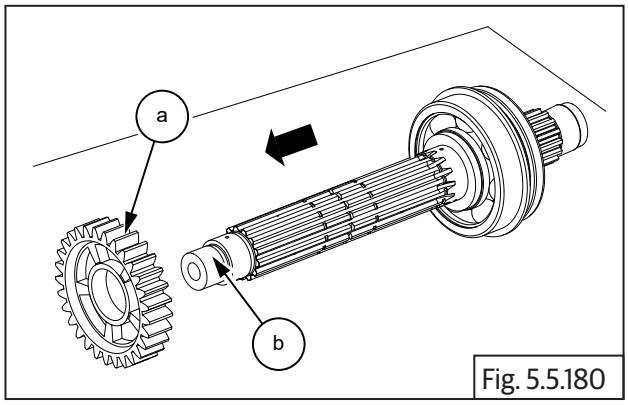

Fig. 5.5.180

- Gently tap and remove the bearing **(a)** from the driveshaft **(b)**.

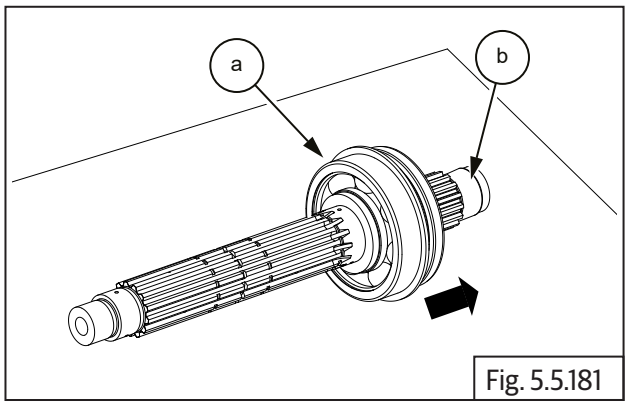

Fig. 5.5.181

5.5.48. Selector Fork and Spindles

- Support inner selector fork **(b)** and pullout spindle **(a)** from the RH side of lower crankcase **(c)**.

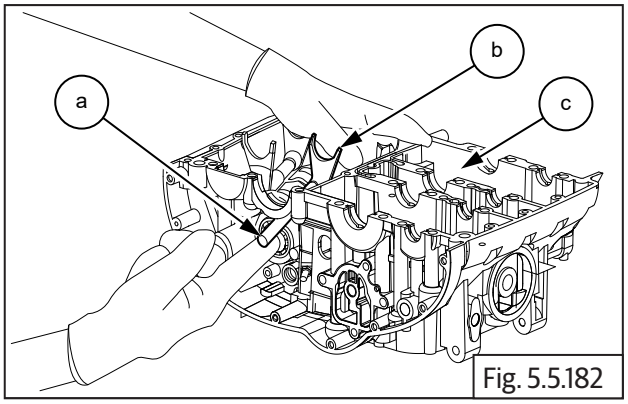

Fig. 5.5.182

- Support the 2 inner selector forks and pull out the spindle **(a)** from the RH side of lower crankcase **(b)**.

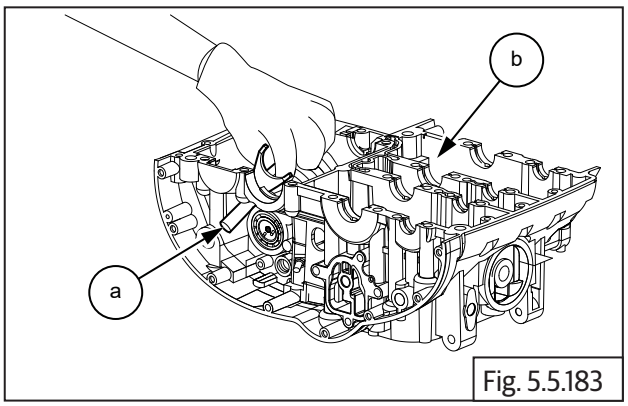

Fig. 5.5.183

5.5.49. Gear Shift Cam Drum

- Gently drive out gear shift cam drum **(a)** from the LH side of lower crankcase.

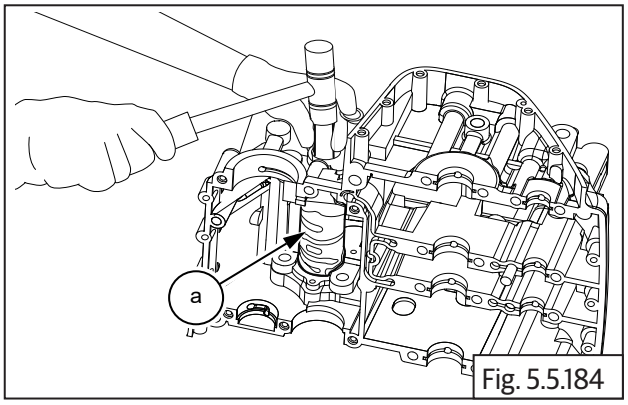

Fig. 5.5.184

	Mallet

ENGINE INSPECTION

CONTENTS **PAGE**

5.6 Engine Inspection 229

5.6.1 Cylinder Head 229

5.6.2 Cylinder Barrel 233

5.6.3 Crankcase 235

5.6.4 Clutch Components 236

5.6.5 Shifter Forks 237

5.6.6 Selector Drum 237

5.6.7 Magneto Cover 237

5.6.8 Clutch Cover 238

5.6 Engine Inspection

NOTE
• *Remove off carbon deposits by scraping gently.* • *Use soft blunt objects to clean.* • *Wash components with recommended solvents.* • *Ensure area is clean and dry before inspection.*

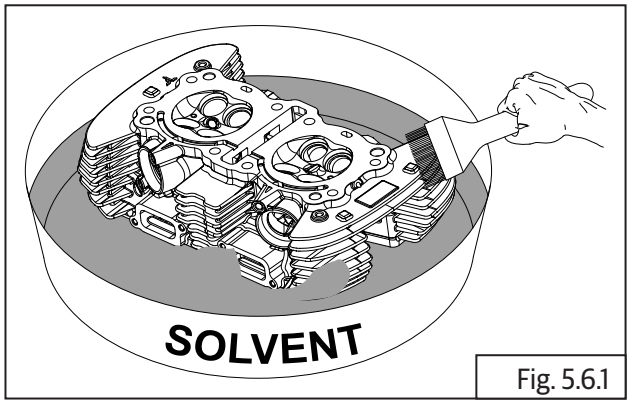

Fig. 5.6.1

5.6.1 Cylinder Head

Cylinder Head Inspection

- Inspect cylinder head carefully for any cracks, blow holes or damages – especially in the inlet and exhaust ports.
- Place thick straight edge across cylinder head gasket seating surface.
- Insert pointed feeler gauge of *0.01 mm* thickness between straight edge and cylinder head.
- Inspect and ensure 4 locations **(a, b, c, d)** on cylinder head are at same level.

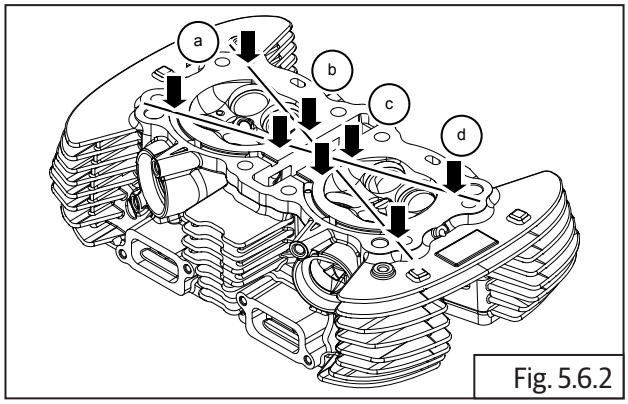

Fig. 5.6.2

- Ensure feeler enters properly at marked places.

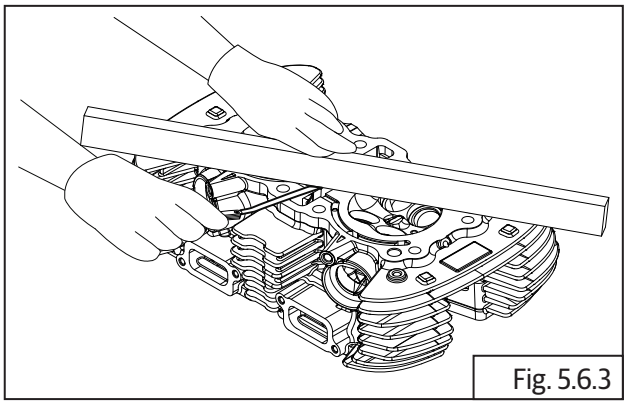
Fig. 5.6.3

	Thick straight edge and Feeler gauge

Service limit:	0.01 mm

Rocker Cover to Cylinder Head Seating Surface

- Place the thick straight edge across the rocker cover gasket seating surface.
- Insert pointed feeler gauge of *0.01 mm* thickness between straight edge and cylinder head at the marked places.

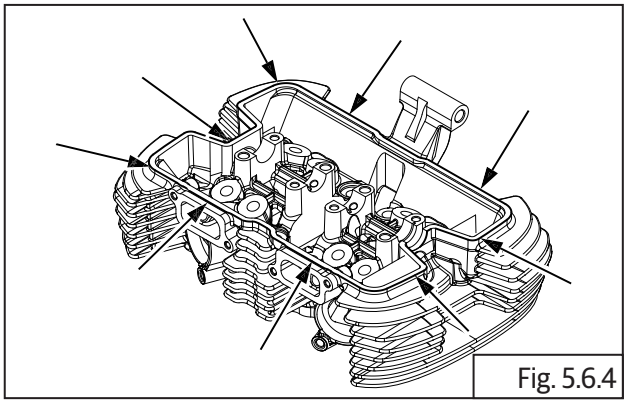
Fig. 5.6.4

- Ensure feeler enters properly at marked places.

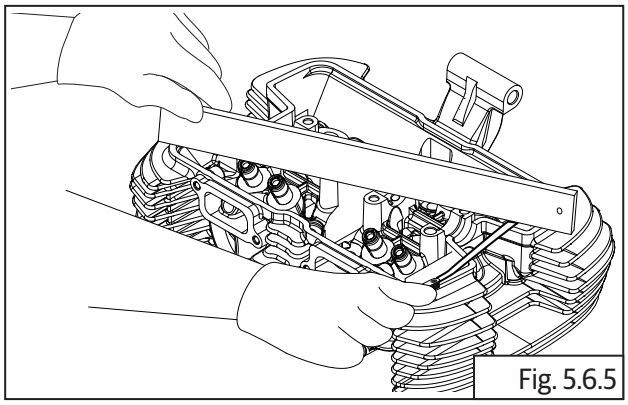

Fig. 5.6.5

	Thick straight edge and Feeler gauge

Service limit:	0.01 mm

Rocker Cover

- Place thick straight edge across the rocker cover.
- Insert pointed feeler gauge of *0.01 mm* thickness between straight edge and rocker cover.
- Inspect and ensure 4 locations **(a, b, c, d)** on rocker cover are at same level.

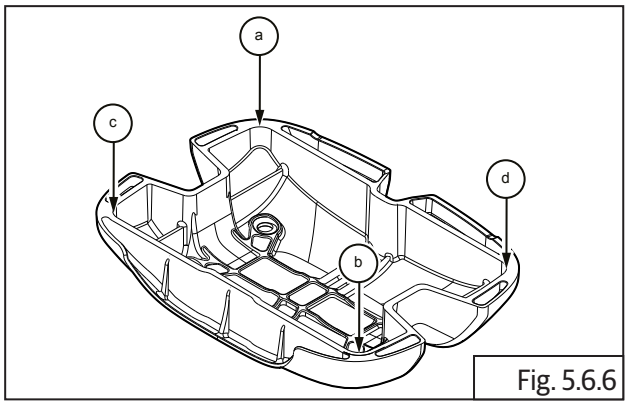

Fig. 5.6.6

	Thick straight edge and Feeler gauge

Service limit:	0.01 mm

Rocker Arm

- Inspect rollers **(a)** for any wear and/or sticky rotation. Replace if defective.
- Measure the inner diameter **(b)** of the rocker arm.

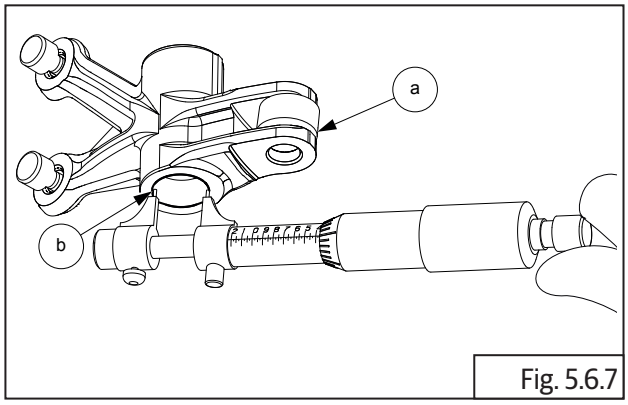

Fig. 5.6.7

	Inside micrometer

Service Limit:	12.05 mm

Rocker Arm Shaft

- Check rocker arm shaft for pitting, score marks, uneven wear or damage. Replace if defective.
- Measure the diameter of the rocker shaft **(a)** at the rocker arm working area.

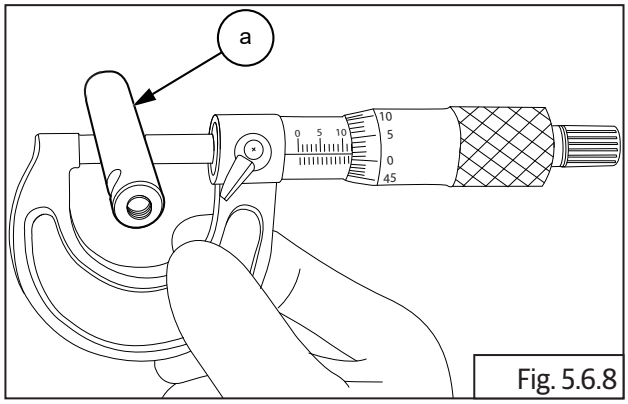

Fig. 5.6.8

	Micrometer

Service Limit:	11.947 mm

Tappet Adjusters

- Inspect "elephant foot" **(a)** for any wear and/or sticky rotation. Replace if defective.

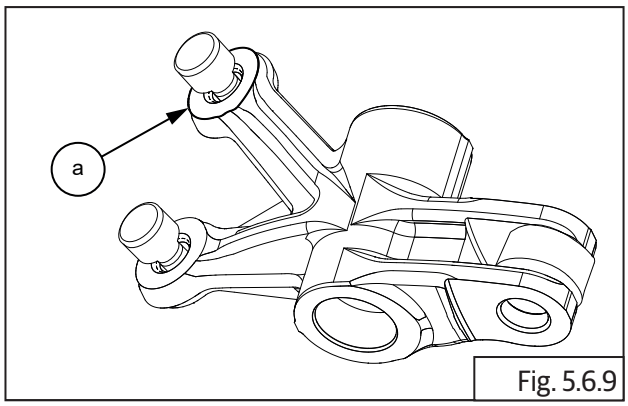

Fig. 5.6.9

Camshaft Run-out

- Inspect camshaft lobes for pitting, score marks, uneven wear or damage.
- Support the cam shaft on the 2 V-blocks **(a)**.
- Rotate the camshaft slowly and measure run-out with a dial gauge **(b)** at the machined place.

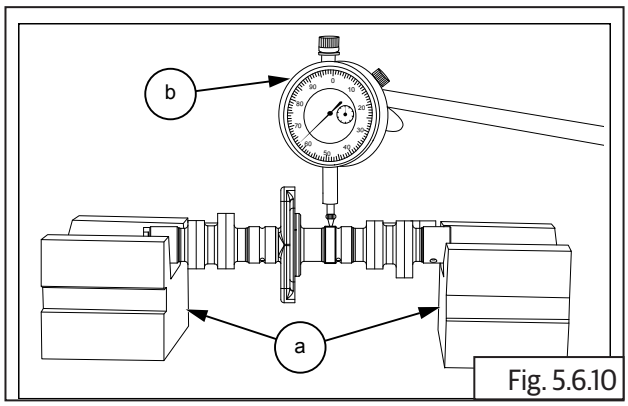

Fig. 5.6.10

	V-Blocks and Dial gauge

Service limit:	0.05 mm

Camshaft Journal OD

- Measure camshaft journal OD **(a)**.

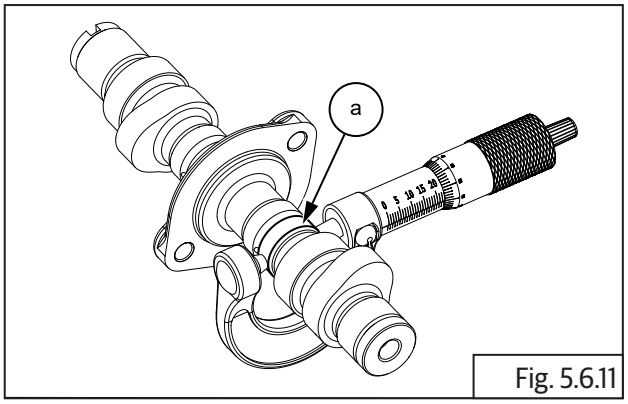

Fig. 5.6.11

	Micrometer

Service Limit:	21.930 mm

Camshaft Lobe

- Inspect cam lobes for scoring, wear-out and scratches.
- Measure height of each cam lobe **(a)**.

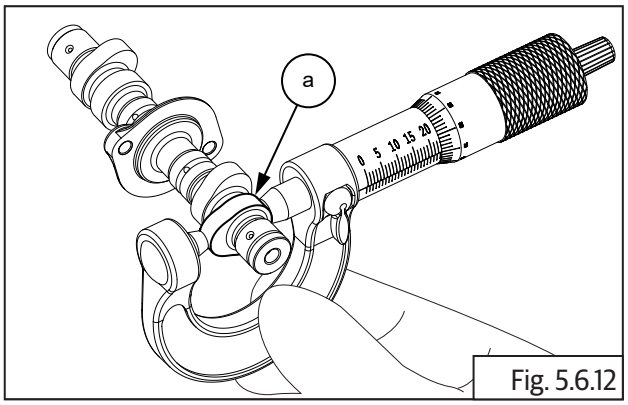

Fig. 5.6.12

	Micrometer

Service limit (Intake):	35.49 mm
Service limit (Exhaust):	35.50 mm

Valve Inspection.

- Check each valve for wear, burn or distortion at its face and stem end. Replace valve, if necessary.
- Check valve stem end face for pitting and wear.
- When it is worn out, replace the valve.

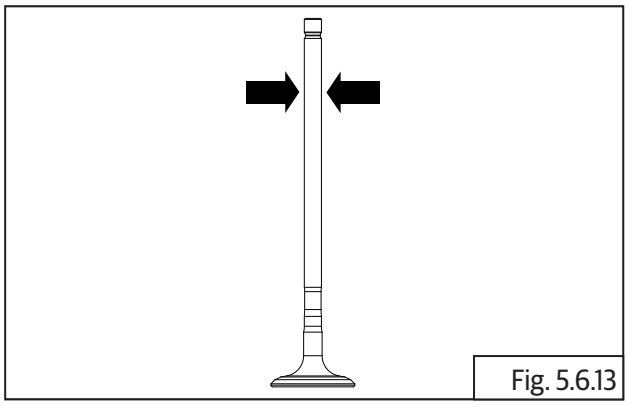

Fig. 5.6.13

Valve Guide ID (Inlet and Exhaust)

- Using micrometer and bore gauge, measure the ID of the valve guides at the top and bottom working area inside the guides.

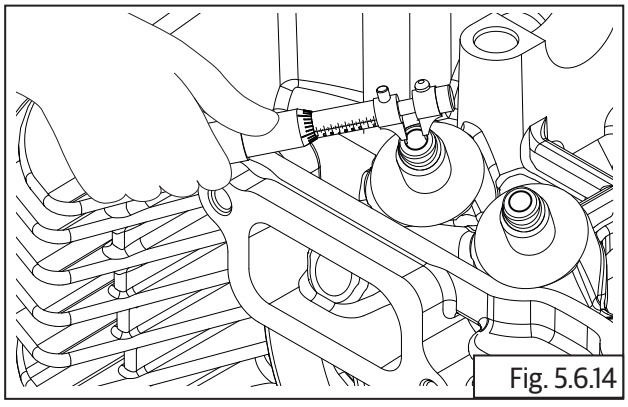

Fig. 5.6.14

	Micrometer and Bore gauge

Service Limit Intake	5.065 mm
Service Limit Exhaust:	5.100 mm

Valve Spring (Inlet and Exhaust)

- Measure load on installed and working condition.

Installed Load	
Minimum:	154.100 N-m
Maximum:	174.100 N-m

Working Load	
Minimum:	431.300 N-m
Maximum:	461.300 N-m

Valve Stem OD (Inlet and Exhaust Valve)

- Measure diameter at marked places along the length of each stem.

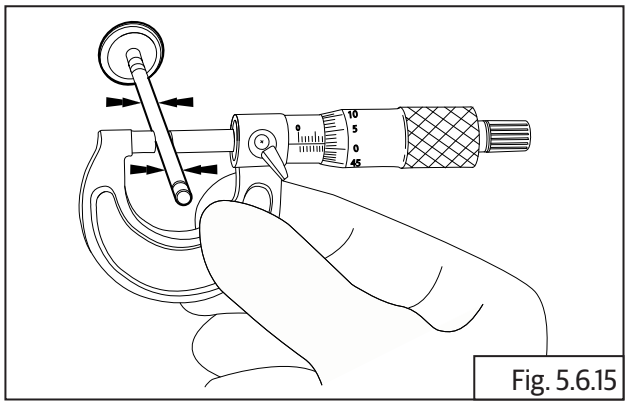

Fig. 5.6.15

	Micrometer

Inlet Valve Stem	
Measuring Point	**Service Limit**
Stem OD Top	4.960 mm
Stem OD middle	4.960 mm
Stem OD bottom	4.960 mm
Bend	0.010 mm

Exhaust Valve Stem	
Measuring Point	**Service Limit**
Stem OD Top	4.940 mm
Stem OD middle	4.940 mm
Stem OD bottom	4.940 mm
Bend	0.010 mm

5.6.2 Cylinder Barrel

Cylinder Barrel Bore ID

- Check cylinder bore to piston working area for scoring, seizure marks and/or excessive wear.
- Measure the cylinder bore at the top, middle and bottom at the rings working area using a bore gauge.
- Measure at both across and along the gudgeon pin axis.

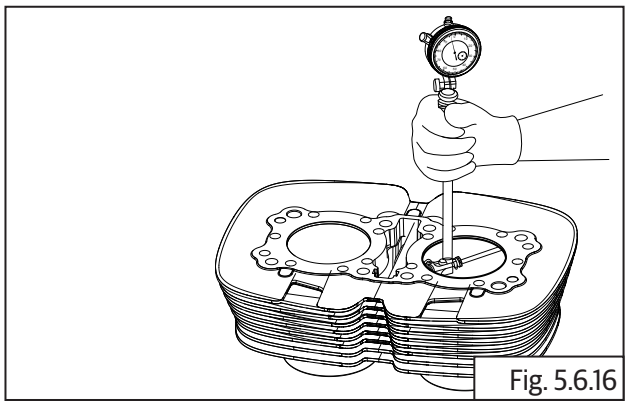

Fig. 5.6.16

	Bore gauge

Measuring points	Service Limit
(ID) Top of Piston working area	0.030 mm
(Ovality) Top of Piston working area	0.003 mm
(ID) Middle of Piston working area	0.030 mm
(Ovality) Middle of Piston working area	0.003 mm
(ID) Bottom of Piston working area	0.030 mm
(Ovality) Bottom of Piston working area	0.003 mm

Bore Taper Limit

- Measure the cylinder taper at three levels: Top **(a)**, Middle **(b)**, and Bottom **(c)** in the X and Y axis.

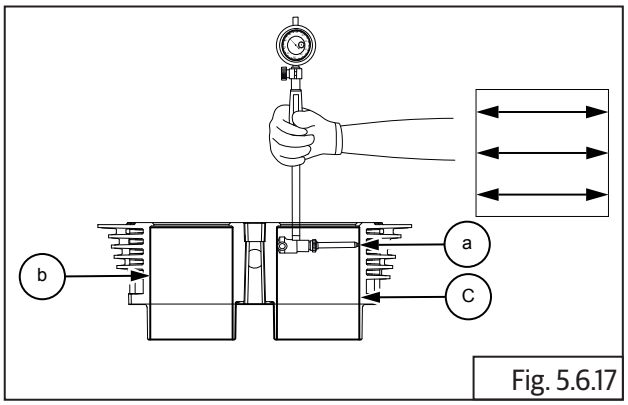

Fig. 5.6.17

	Bore gauge

Service Limit	78.100 mm

Piston OD

- Measure and record both LH and RH cylinder piston OD at three levels - Top, Middle, and Bottom using Micrometer.

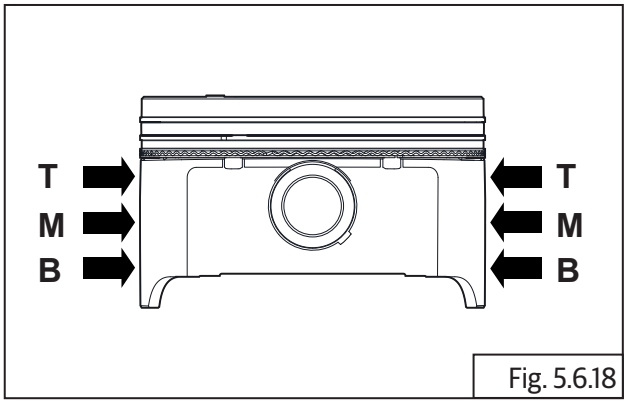

Fig. 5.6.18

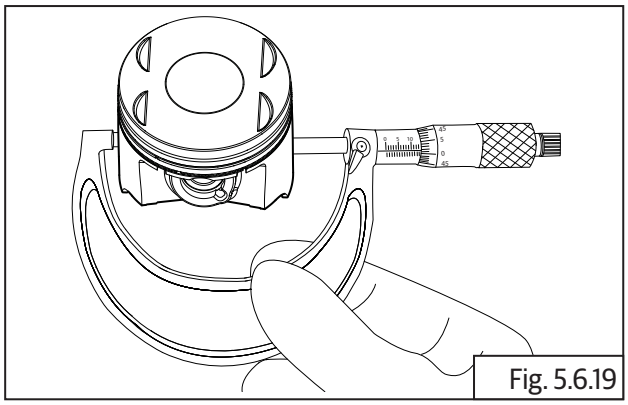
Fig. 5.6.19

	Micrometer

Service Limit	77.870 mm

Piston Pin Bore ID

- Measure both LH and RH cylinder piston pin bore **(a)** inner diameter using inside micrometer **(b)**.

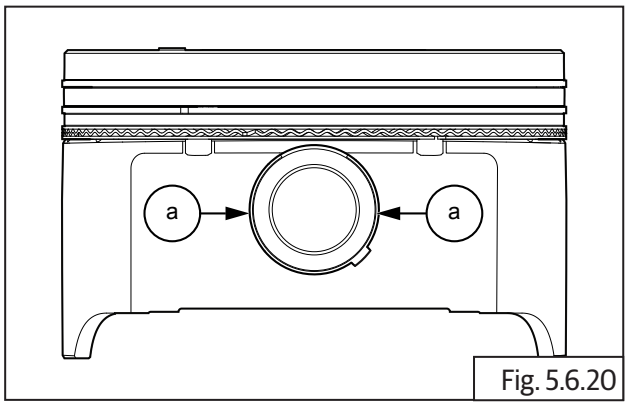

Fig. 5.6.20

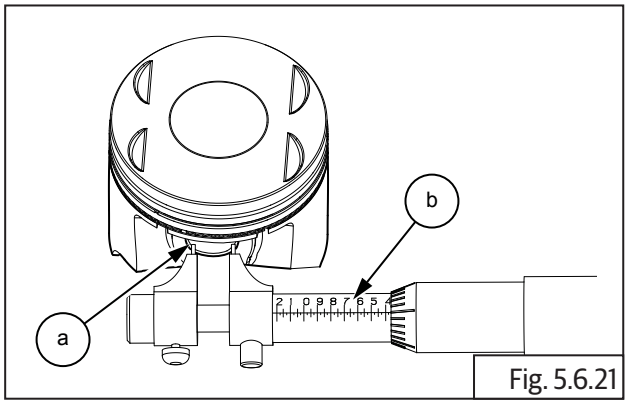

Fig. 5.6.21

	Inside micrometer

Service Limit	20.020 mm

Piston Pin

- Measure the diameter of the piston pin **(a)**.

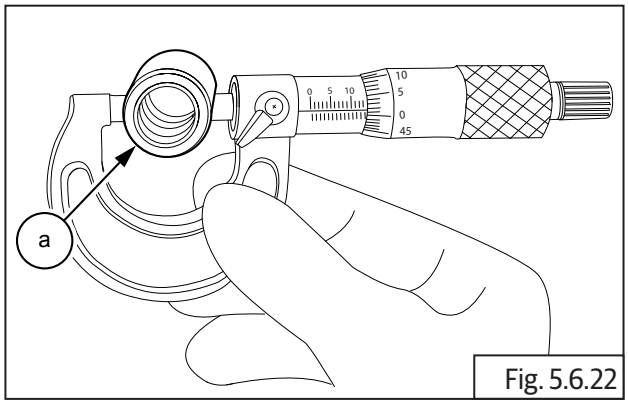

Fig. 5.6.22

	Micrometer

Service Limit	19.977 mm

Piston Ring End Gap

- Position the piston rings at their respective locations at the top of the cylinder barrel and ensure they are seated "squarely" inside the cylinder barrel.

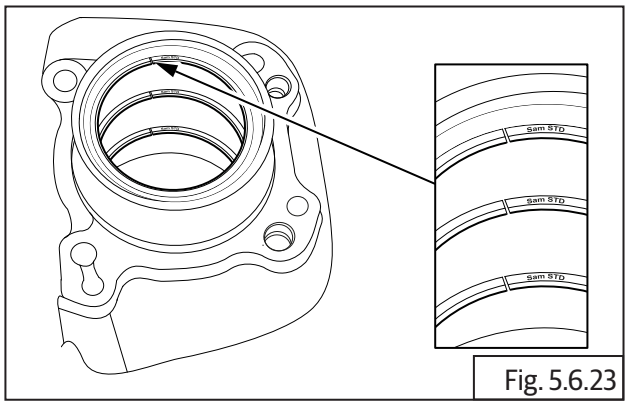

Fig. 5.6.23

- Measure piston rings end gap **(a)** using feeler gauge **(b)**.

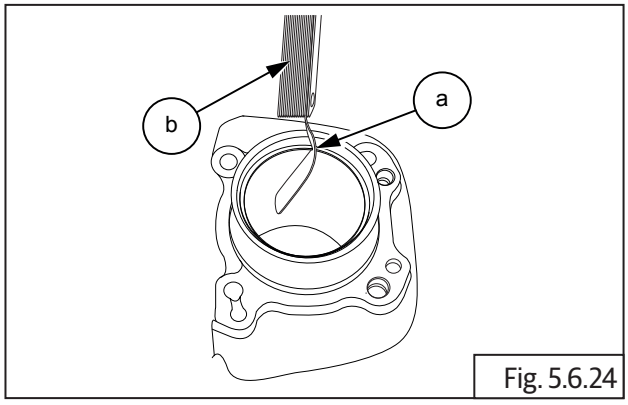

Fig. 5.6.24

	Feeler gauge

Measuring Points	Service Limit
Piston ring top 1	0.06mm
Piston ring top 2	0.07 mm

5.6.3 Crankcase

Connecting Rod Small End ID

- Measure the connecting rod small end inner diameter **(a)**.

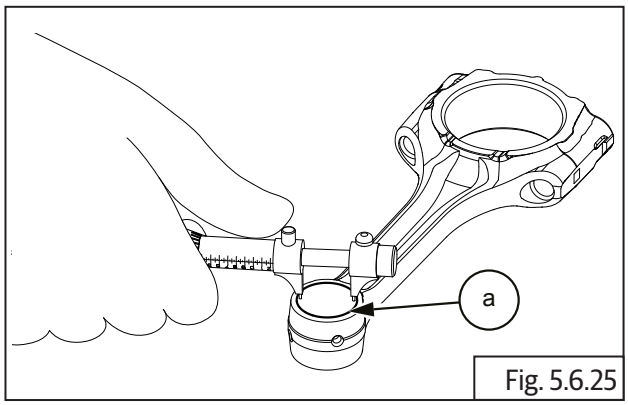

Fig. 5.6.25

	Inside Micrometer

Service Limit	20.05 mm

Balancer Shaft Run-out

- Place the balancer shaft in V-blocks.
- Rotate the balancer shaft and measure run-out with a dial gauge at the machined surface **(a)** and **(b)**.

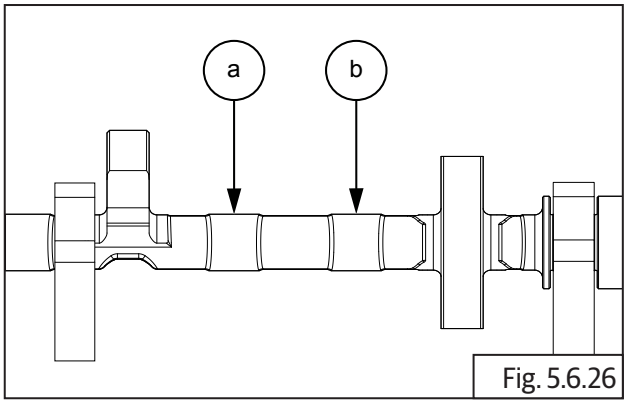

Fig. 5.6.26

	V-Blocks and Dial gauge.

Service limit:	0.035 mm

Balancer Shaft Face Out

- Place the balancer shaft in V-blocks.
- Rotate the balancer shaft and measure the web face out with a dial gauge at the specified place **(a)** and **(b)**.

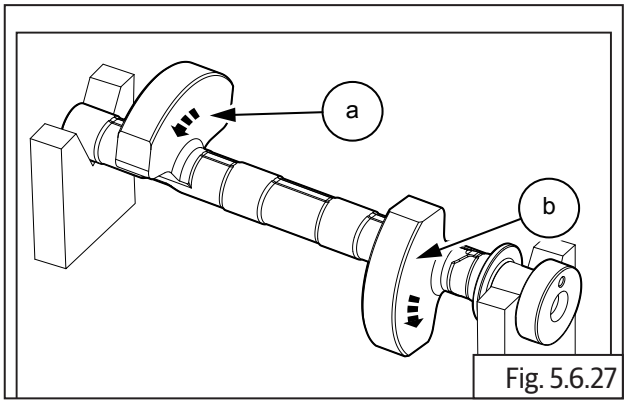

Fig. 5.6.27

	V-Blocks and Dial gauge.

Service limit:	0.040 mm

5.6.4 Clutch Components

Friction plate

- Inspect the clutch plates visually for uneven wear, seizure and discoloration.
- Measure the thickness of the friction plate **(a)** at 4 locations marked by arrows.

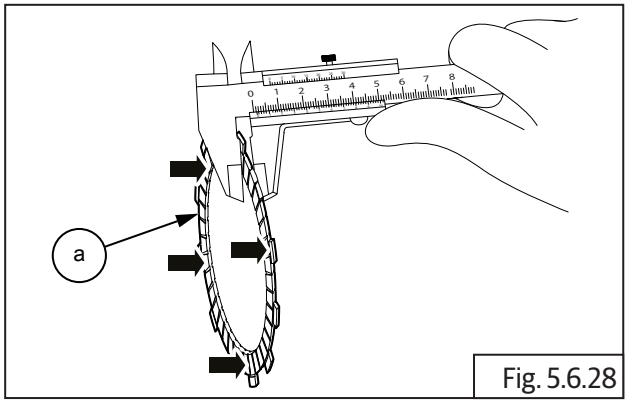

Fig. 5.6.28

	Vernier caliper

Part Description	Parameter	Standard Size (mm)	Service Limit (mm)
CFD Plate	Thickness	3 ± 0.1	Below 2.8
	Bend/Warp	0.2 Max	0.3 Max

Steel Plate

- Measure the thickness of the steel plates **(a)** at different locations.

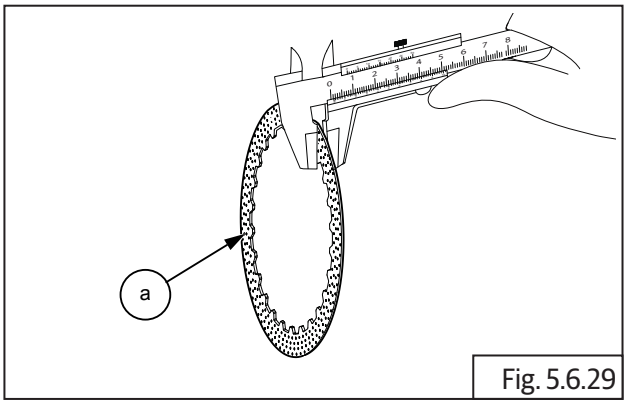

Fig. 5.6.29

	Vernier caliper

Part Description	Parameter	Standard Size (mm)	Service Limit (mm)
Steel Plate	Thickness	2 ± 0.15	Below 1.8
	Bend/Warp	0.2 Max	0.3 Max

Clutch Hub (Outer and Inner)

- Inspect the clutch hub **(a)** for any scratches, wear or damage of the lugs.

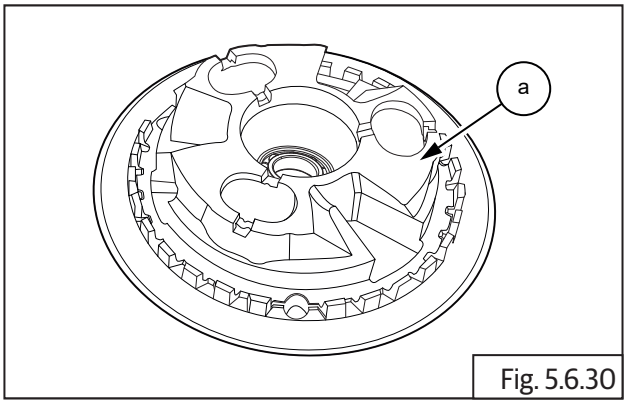

Fig. 5.6.30

- Visually inspect clutch center **(a)** for any scratches, wear or damage.

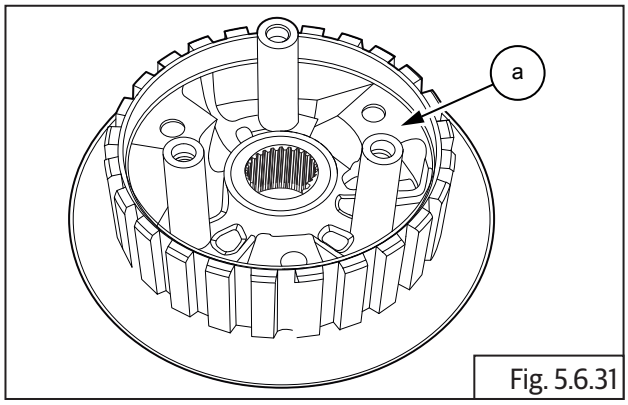

Fig. 5.6.31

Clutch Housing

- Visually inspect clutch housing and lugs for any, wear, bends, lug breakage, heat marks or damages.

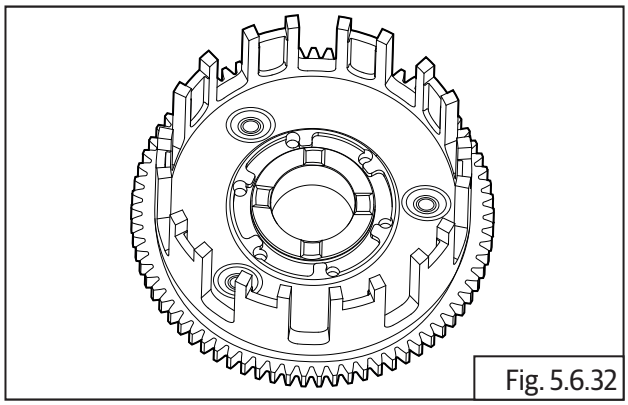
Fig. 5.6.32

5.6.5 Shifter Forks

- Measure the pegs on shifter forks **(a)** using micrometer for wear.

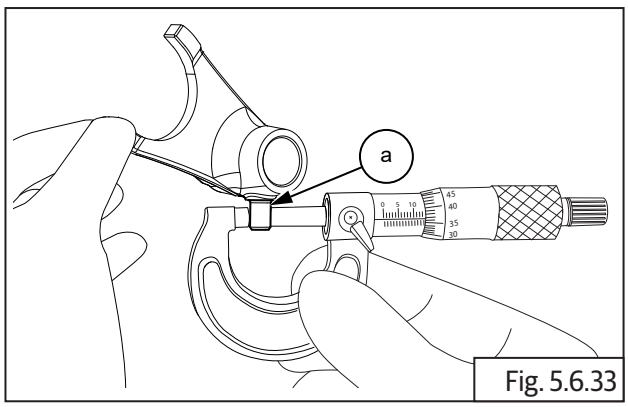

Fig. 5.6.33

	Micrometer

Service Limit:	0.100 mm

- Visually inspect the shifter fork machined lugs **(a)** for damage, excessive wear out scoring and replace if damaged.

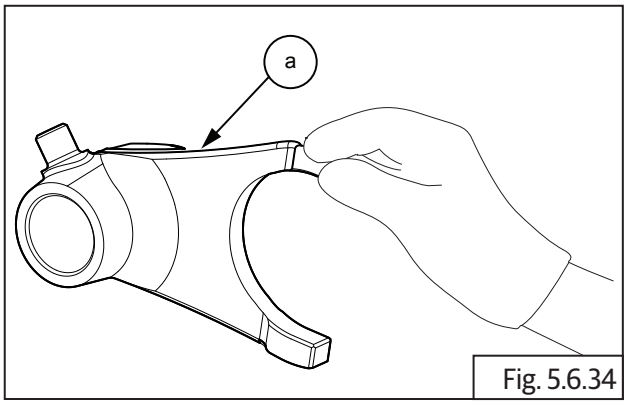

Fig. 5.6.34

5.6.6 Selector Drum

- Inspect the shifter fork working grooves in the selector drum for any damages, chipped ends etc. Measure the grooves in their working area for excessive wear out.

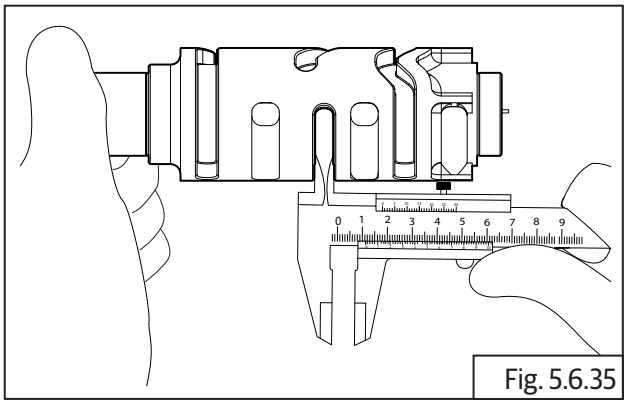
Fig. 5.6.35

	Vernier caliper

Service Limit:	0.150 mm

5.6.7 Magneto Cover

- Visually inspect the magneto cover for any outer damages, cracks etc.
- Inspect the cover seating area for any damages pitting etc.
- Place the magneto cover **(a)** on a surface plate and measure for any surface warpage using feeler strip **(b)** of *0.01 mm*.
- Replace cover if warpage is beyond service limit.

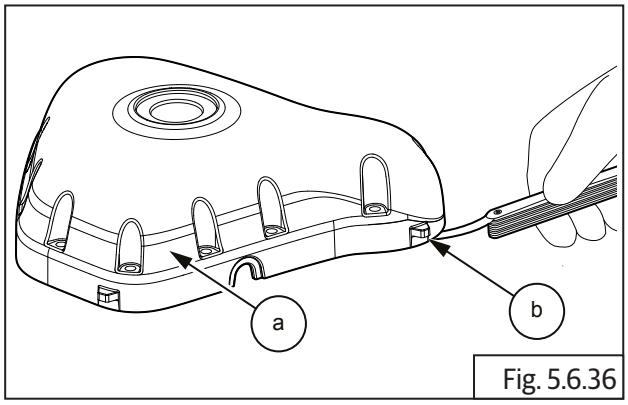

Fig. 5.6.36

	Feeler gauge and Surface plate

Service limit:	0.01 mm

5.6.8 Clutch Cover

- Visually inspect the clutch cover for any outer damages, cracks etc.
- Inspect the cover seating area for any damages pitting etc.
- Place the clutch cover **(a)** on a surface plate and measure for any surface warpage using feeler strip **(b)** of *0.01 mm*.
- Replace cover if warpage is beyond service limit.

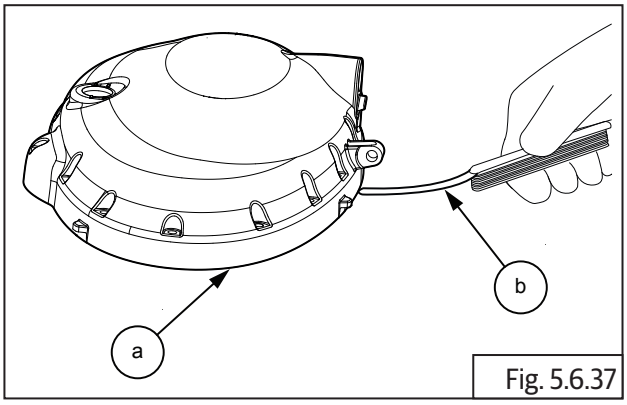

Fig. 5.6.37

	Feeler gauge and Surface plate

Service limit:	0.01 mm

JOURNAL BEARINGS SELECTION

CONTENTS **PAGE**

5.7 Journal Bearings Selection Chart.....241

Bearings Selection Procedure.....241

5.7.1. Crankshaft Journal Bearings 241

5.7.2. Balancer Shaft Journal Bearings.....243

5.7.3. Connecting rod journal bearings 245

5.7 Journal Bearings Selection Chart

Bearings Selection Procedure

5.7.1. Crankshaft Journal Bearings

Crankshaft journal bearings selection chart (1.1)

Crankcase	Crankshaft	Bearing code	Bearing color
A	A	CODE-1	Green
A	B	CODE-2	Black
A	C	CODE-3	Brown
B	A	CODE-2	Black
B	B	CODE-3	Brown
B	C	CODE-4	Yellow

NOTE
• *Crankshaft punch mark will be with alphabets A, B, C punch mark only.*
• *Crankcase punch mark will be with alphabets A, B punch mark only.*

Example :

The below sample illustration is only for explanation for selecting crank-shaft journal bearing. This can be found in the lower crank case.



NOTE
• ***BAL*** *referes to Balancer Shaft,* ***CRA*** *refers to Crank Shaft*

The alphabets punched on the upper crankcase should be correlated with the alphabets punched on the crankshaft web to arrive at the journal wise bearing selection of AA, AB, AC OR BA, BB, BC.

Based on the journal wise markings combination, the corresponding bearing kit (consisting of 2 journal bearings) code/colour should be selected by referring to the chart below as Code - 1, Code - 2, Code - 3, Code - 4.

Crankcase	Crankshaft	Bearing code	Bearing color
A	A	CODE-1	Green
A	B	CODE-2	Black
A	C	CODE-3	Brown
B	A	CODE-2	Black
B	B	CODE-3	Brown
B	C	CODE-4	Yellow

Hence, crankshaft journal bearing selection would be in the following order:

- Journal Bearing 1: Matching: AB, Bearing Code - 2 , Colour: Black
- Journal Bearing 2: Matching: AA, Bearing Code - 1 , Colour: Green
- Journal Bearing 3: Matching: BA, Bearing Code - 2 , Colour: Brown
- Journal Bearing 4: Matching: AA, Bearing Code - 1 , Colour: Green

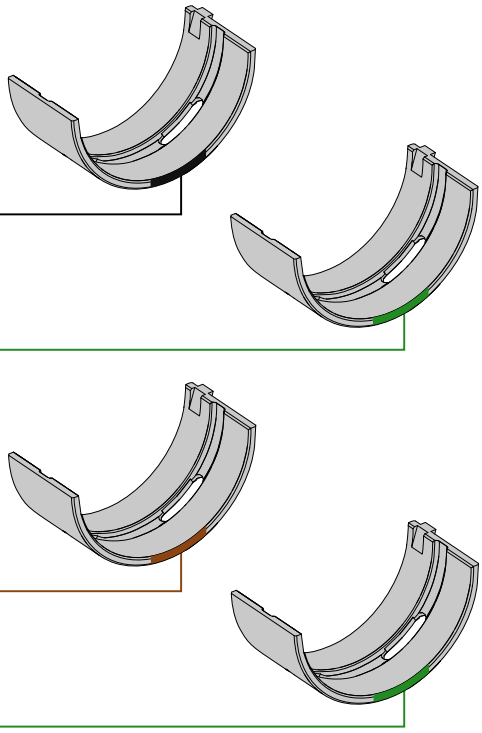

CAUTION

Ensure the journal bearing seating areas in the upper and lower crankcases are clean and dry.

Ensure the bearings are correctly positioned and aligned before they are fixed into the crankcases.

Do not interchange the journal bearings, they should be installed in their correct sequential order only.

Do not use any tools while installing bearings as it ma y damage the bearings.

Do not reuse journal bearings once they are removed from the crankcases.

5.7.2. Balancer Shaft Journal Bearings

Balancer shaft journal bearing selection chart (1.2)

Crankcase	Balancer Shaft	Bearing code	Bearing color
A	A	CODE-1	Green
A	B	CODE-2	Black
A	C	CODE-3	Brown
B	A	CODE-2	Black
B	B	CODE-3	Brown
B	C	CODE-4	Yellow

NOTE
• *Balancer shaft punch mark will be with alphabets A, B, C punch mark only.*
• *Crankcase punch mark will be with alphabets A, B punch mark only.*

Example:

The below sample illustration is only for explanation for selecting balancer-shaft journal bearing. This can be found in the lower crank case.



NOTE
• ***BAL*** *referes to Balancer Shaft,* ***CRA*** *refers to Crank Shaft*

The alphabets punched on the upper crankcase should be correlated with the alphabets punched on the balancer shaft web to arrive at the journal wise bearing selection of AA, AB, AC or BA, BB, BC.

Based on the journal wise markings combination, the corresponding bearing kit (consisting of 2 journal bearings) code/colour should be selected by referring to the chart below as Code - 1, Code - 2, Code - 3, Code - 4.

Crankcase	Balancer Shaft	Bearing code	Bearing color
A	A	CODE-1	Green
A	B	CODE-2	Black
A	C	CODE-3	Brown
B	A	CODE-2	Black
B	B	CODE-3	Brown
B	C	CODE-4	Yellow

Hence, balancer shaft journal beari

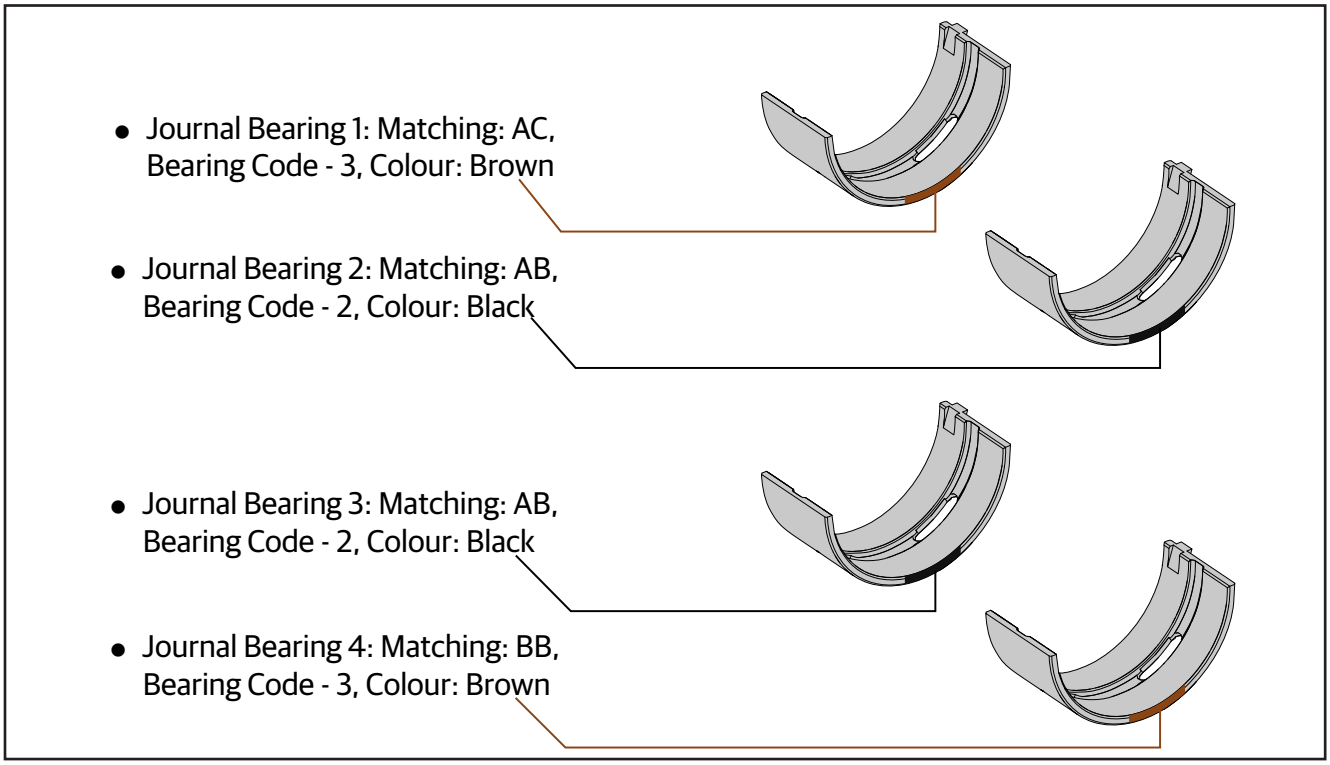

⚠ CAUTION

Ensure the journal bearing seating areas in the upper and lower crankcases are clean and dry.

Ensure the bearings are correctly positioned and aligned before they are fixed into the crankcases.

Do not interchange the journal bearings, they should be installed in their correct sequential order only.

Do not use any tools while installing bearings as it may damage the bearings.

5.7.3. Connecting rod journal bearings

Connecting rod journal bearings selection chart (1.3)

Connecting rod	Crankshaft	Bearing code	Bearing Color
1	1	CODE-1	Green
1	2	CODE-2	Black
2	1	CODE-2	Black
2	2	CODE-3	Brown

NOTE
• *Crankshaft punch mark will be with numerics 1 & 2 only.*
• *Connecting rod punch mark will be with numerics containing 1 & 2 mark only.*

Example:

The below sample illustration is only for explanation for selecting connecting rod journal bearing.

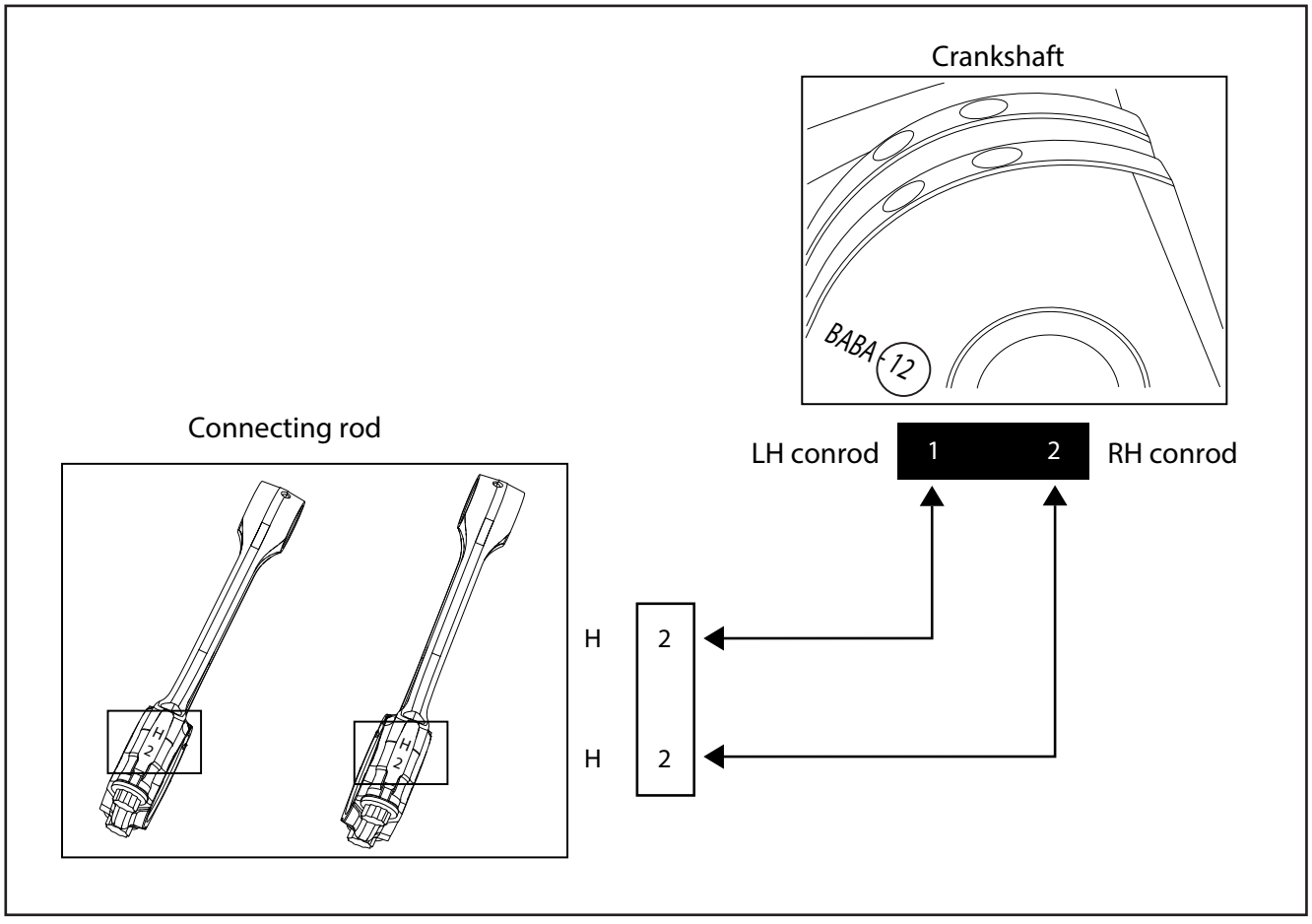

The connecting rod punch mark should be matched with crankshaft numeric punch mark and then the bearing can be selected by referring chart (1.3). Thus the bearing would be Code-2, Code-3

Connecting rod	Crankshaft	Bearing code	Bearing Color
1	1	CODE-1	Green
1	2	CODE-2	Black
2	1	CODE-2	Black
2	2	CODE-3	Brown

Hence connecting rod bearing would be in the following order

- Connecting rod LH: Matching: 21, Bearing Code - 2, Colour: Black

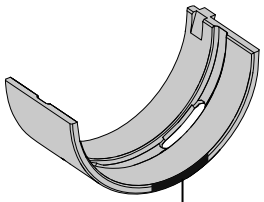

- Connecting rod RH: Matching: 22, Bearing Code - 3 Colour: Brown

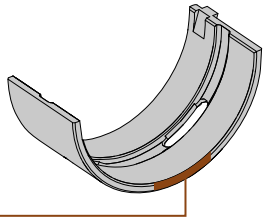

⚠ CAUTION

Ensure the journal bearing seating areas in the connecting rod and connecting rod cup are clean and dry.

Ensure the bearings are correctly positioned and aligned before they are fixed into the connecting rod and connecting rod cup.

Do not interchange the bearings. They should be installed in their correct order only.

Do not use any tools to install the bearings in the connecting rods/connecting rod cups as it may damage the bearings.

ENGINE ASSEMBLY

CONTENTS **PAGE**

5.8 Engine Assembly 250

5.8.1. Components Sub Assembly in Upper Crankcase 250

5.8.2. Crankshaft 251

5.8.3. Connecting Rods 252

5.8.4. Balancer Shaft 253

5.8.5. Countershaft Components 255

5.8.6. Driveshaft Components 259

5.8.7. Gear Shift Cam Drum 263

5.8.8. Shifter fork 264

5.8.9. Crankcases closing 266

5.8.10. Oil Pressure Switch 274

5.8.11. Oil Bypass 274

5.8.12. Oil Strainer 275

5.8.13. Oil Pan 275

5.8.14. Drain Plug 275

5.8.15. Pistons and Rings 276

5.8.16. Cylinder Barrel Dowels on Crankcase 277

5.8.17. Cylinder Barrel Gasket on Crankcase 277

5.8.18. Piston LH in Cylinder Barrel 277

5.8.19. Piston RH in Cylinder Barrel 278

5.8.20. Cylinder Head Gasket on Cylinder Barrel 279

5.8.21. Floating Chain Pad 279

5.8.22. Components in Cylinder Head 281

5.8.23. Cylinder Head on Cylinder Barrel 282

5.8.24. Starter Clutch to Magneto Rotor 284

CONTENTS **PAGE**

5.8.25. Woodruf Key on Crankshaft 284

5.8.26. Magneto Rotor on Crankcase 284

5.8.27. Camshaft Sub-Assembly 285

5.8.28. Timing Chain Tensioner 287

5.8.29. Rocker Arms in Carriers LH and RH 288

5.8.30. Rocker Carrier on Cylinder Head LH 289

5.8.31. Rocker Carrier on Cylinder Head RH 290

5.8.32. Tappet Clearance Adjustment 290

5.8.33. Cover Cylinder Head 292

5.8.34. Reed Valves 293

5.8.35. Inlet Manifold Rubber Flanges LH & RH 294

5.8.36. Star Index 294

5.8.37. Star Index Stopper 295

5.8.38. Shifter Selector Shaft 297

5.8.39. Oil Pump 299

5.8.40. Clutch Assembly 301

5.8.41. Oil Level Window in Clutch Cover 304

5.8.42. Clutch Actuating Lever Assembly 304

5.8.43. Clutch Cover 305

5.8.44. Gear Position Sensor (GPS) 307

5.8.45. FD Sprocket 307

5.8.46. Magneto Cover Sub Assembly 309

5.8.47. Starter Motor 311

5.8.48. Breather Box 311

5.8.49. Oil Filter 312

5.8 Engine Assembly

5.8.1. Components Sub Assembly in Upper Crankcase

Crankshaft Journal Bearings

NOTE
• *In case the crankshaft is being resued, please **Do not** disturb OR remove the journal bearings from the crankcase.* • *Refer journal bearing selection chart before installing journal bearings into crankcase.* • *Ensure journal bearings are cleaned and well lubricated.*

⚠ CAUTION
Install journal bearings carefully by hand. Do not use any tool. It may scratch the component.

- Match crankcase bearing code with the crankshaft code..

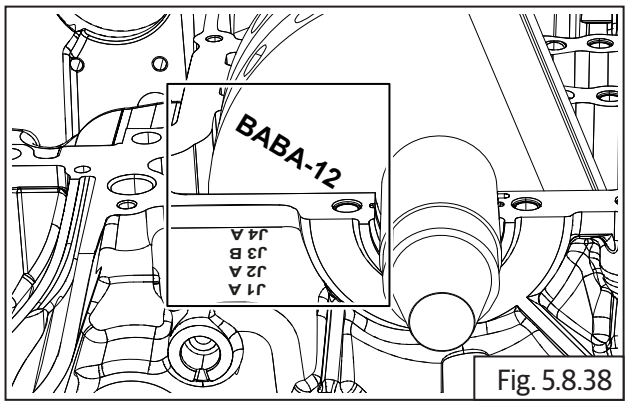

Fig. 5.8.38

- Select appropriate bearing and assemble journal bearings on crankcase from LH side order.
- Locate crankshaft journal bearing in upper crankcase and ensure that journal bearings **(a)** are seated properly on crankcase **(b)**.

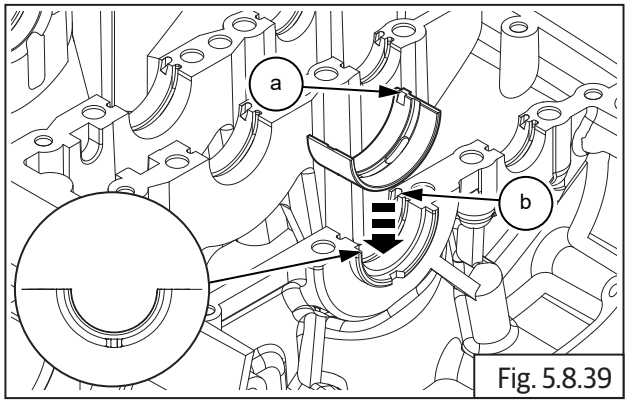

Fig. 5.8.39

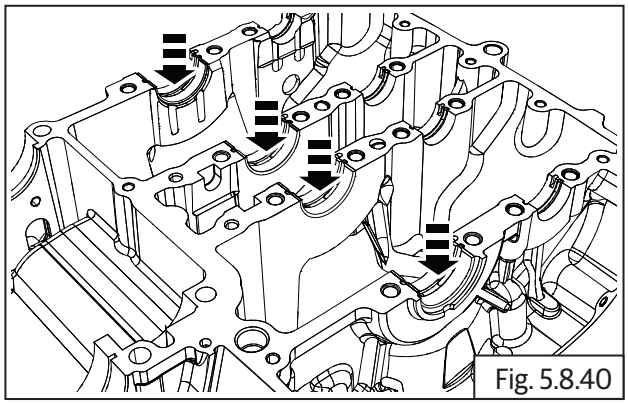
Fig. 5.8.40

Balancershaft Journal Bearings

NOTE
• *In case the balancershaft is being resued, please **Do not** disturb OR remove the journal bearings from the crankcase.* • *Refer journal bearing selection chart before installing journal bearings into crankcase.* • *Ensure journal bearings are cleaned and well lubricated.*

⚠ CAUTION
Install journal bearing carefully by hand. Do not use any tool. It may scratch the component.

- Match crankcase bearing code with balancer shaft code.

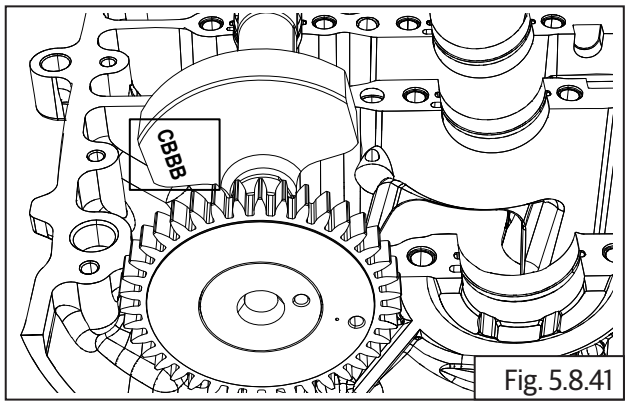

Fig. 5.8.41

- Select appropriate bearing and assemble journal bearings on crankcase from LH side.
- Align mark **(a)** of journal bearing with edge **(b)** in crankcase for balancer shaft.

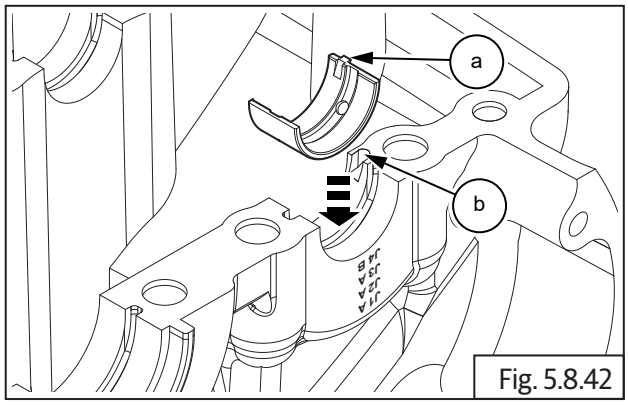

Fig. 5.8.42

Dowels

⚠ CAUTION

Ensure the dowels are correctly located in the upper crankcase.

- Locate and gently press dowels **(a)** in the upper crankcase and ensure they are seated properly.

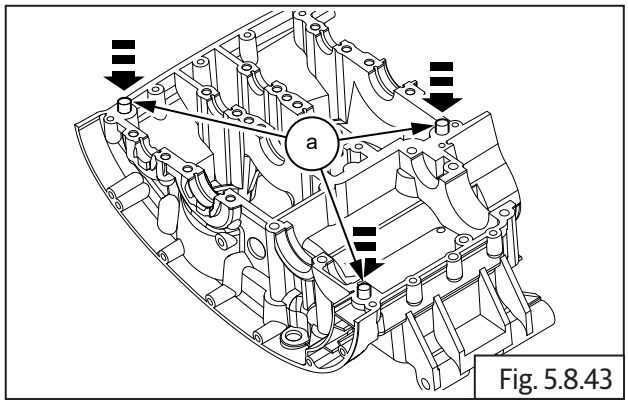

Fig. 5.8.43

Timing Chain Tensioner Pad

- Position timing chain tensioner pad **(a)** in upper crankcase **(b)** with its rubber pad towards the cylinder barrel seating area.

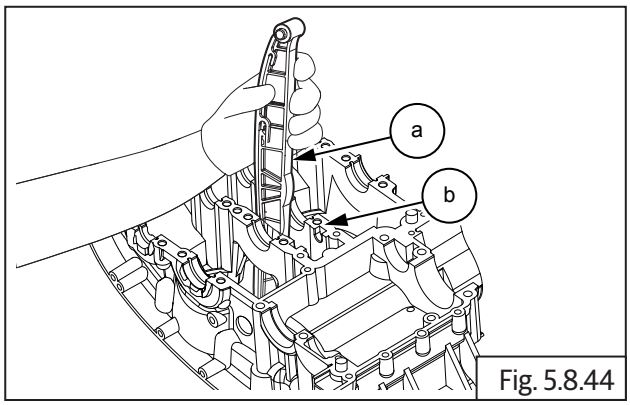

Fig. 5.8.44

- Ensure the lock pegs of the chain tensioner pad are seated correctly in the slots **(a)** in the upper crankcase.

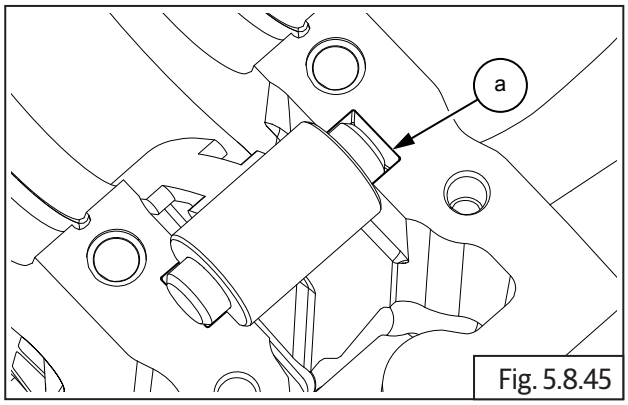

Fig. 5.8.45

5.8.2. Crankshaft

NOTE

- *Ensure journal bearings are cleaned and well lubricated.*

- Assemble timing chain **(a)** on crankshaft gear **(b)**. Ensure it is seated properly.

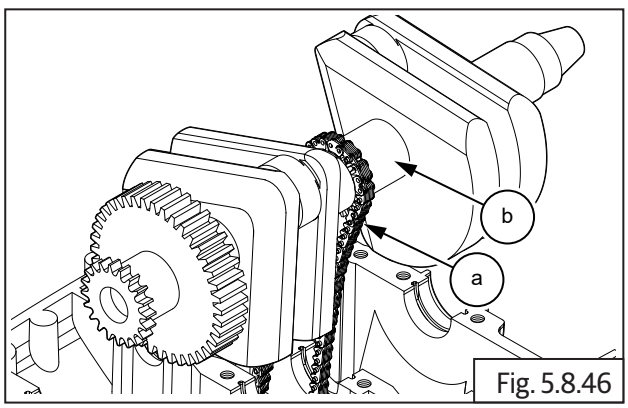

Fig. 5.8.46

- Gently locate crankshaft **(a)** on crankcase **(b)** duly ensuring the following:
  -The timing chain is correctly routed into the cylinder barrel seating area.
  -The gear on the crankshaft is on the RH side (clutch side) of the upper crankcase.

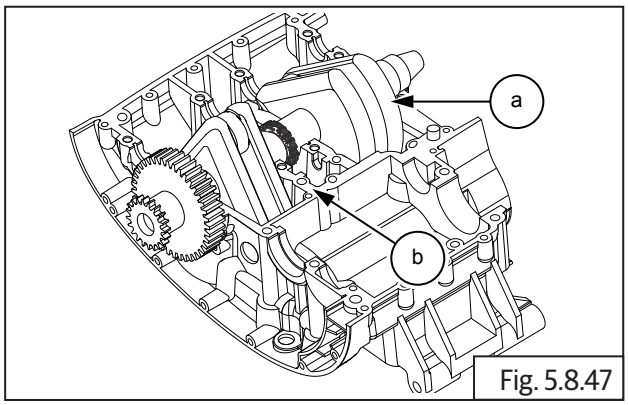

Fig. 5.8.47

5.8.3. Connecting Rods

NOTE

- *Ensure new journal bearings are located correctly in the connecting rods and caps.*
- *Replace connecting rod bolts whenever removed.* **DO NOT** *reuse*

- Connecting rod bolts are for one time use only. **Do not** reuse connecting rod bolts. Always replace them.
- **Do not** interchange connecting rod cap.
- Ensure the lug **(a)** in journal bearing is located in the grooves **(b)** on both connecting rod and cap is seated properly.

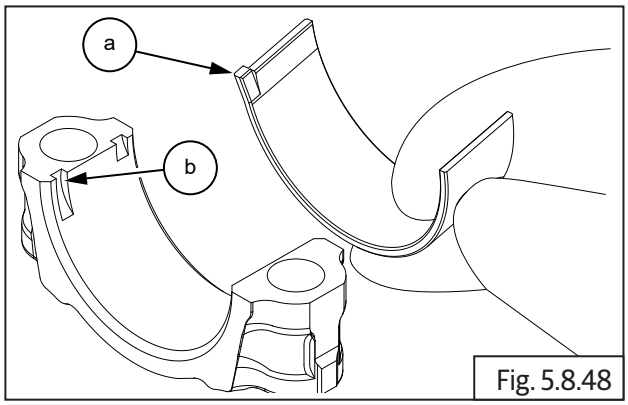

Fig. 5.8.48

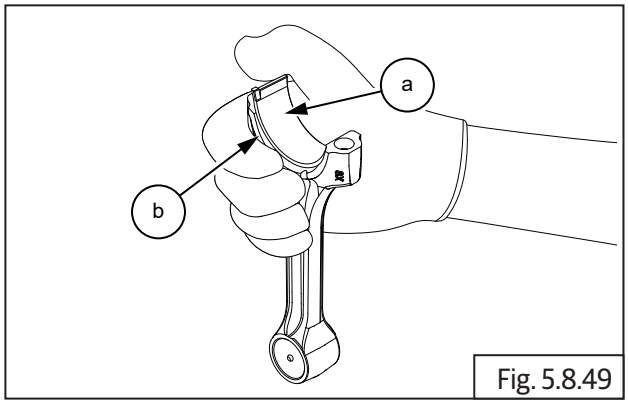

Fig. 5.8.49

⚠ WARNING

Ensure connecting rods Do not get damaged during assembly.

Ensure crankshaft position is such that connecting rods are not projecting out of spigot.

Support crankcase such that it is atleast 3 cm above surface table.

- Insert connecting rod big end through the cylinder barrel seating area and ensure it is seated properly on the crankshaft.
- Support connecting rod to prevent it from falling off.
- Position connecting rod cap on the crankshaft and ensure the mounting holes of the cap and connecting rod are aligned.

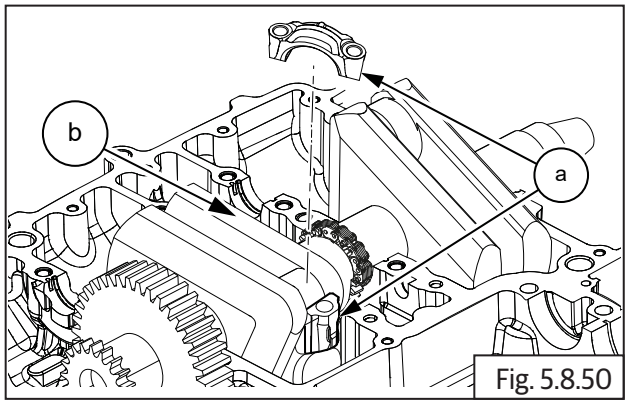

Fig. 5.8.50

- Lubricate and locate 2 Nos. Bi-hexagon bolts **(M9) (a)** on cap and tighten as follows:

  Initially the bolts are first torqued evenly

  subsequently a second torque is applied evenly.

  Finally angle torqued as specified below.

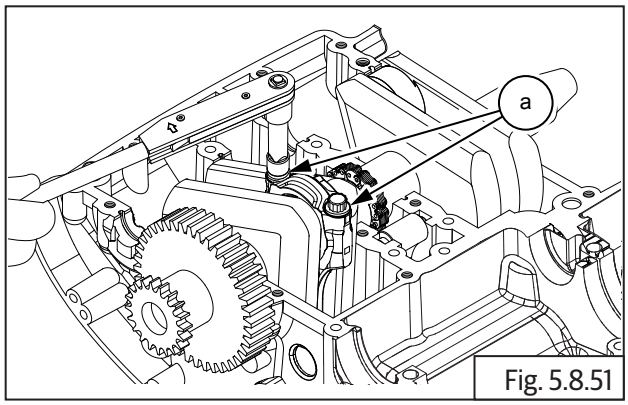

Fig. 5.8.51

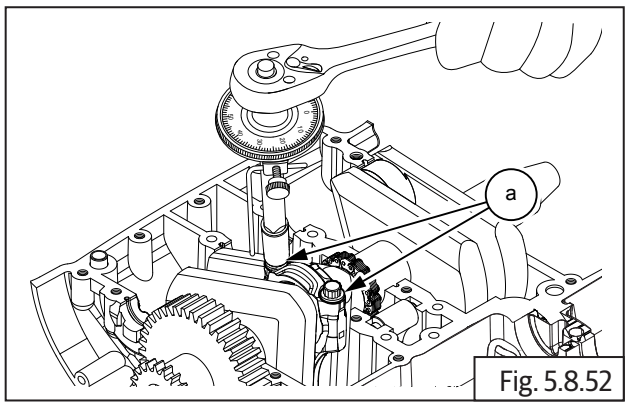

Fig. 5.8.52

	13 mm Bi-hexagon socket with Ratchet
1st Torque	40 N-m/4 kgf-m
2nd Torque	14 N-m/1.4 kgf-m
Angular Torque	75° (deg)

- Repeat above process to assemble the other connecting rod on the crankshaft.

5.8.4. Balancer Shaft

- Ensure the punch mark on the crankshaft gear **(b)** is towards the front of the upper crankcase.
- Locate balancer shaft in upper crankcase duly ensuring the punch mark on the gear **(a)** is aligned with the punch mark on the crankshaft gear.
- Ensure both the gears are meshed correctly.

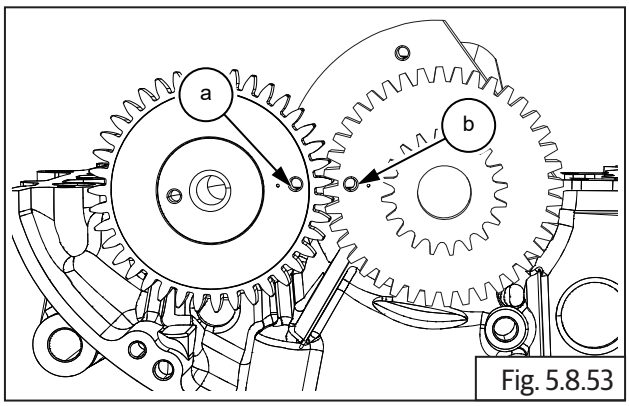

Fig. 5.8.53

Countershaft Assembly Sequence

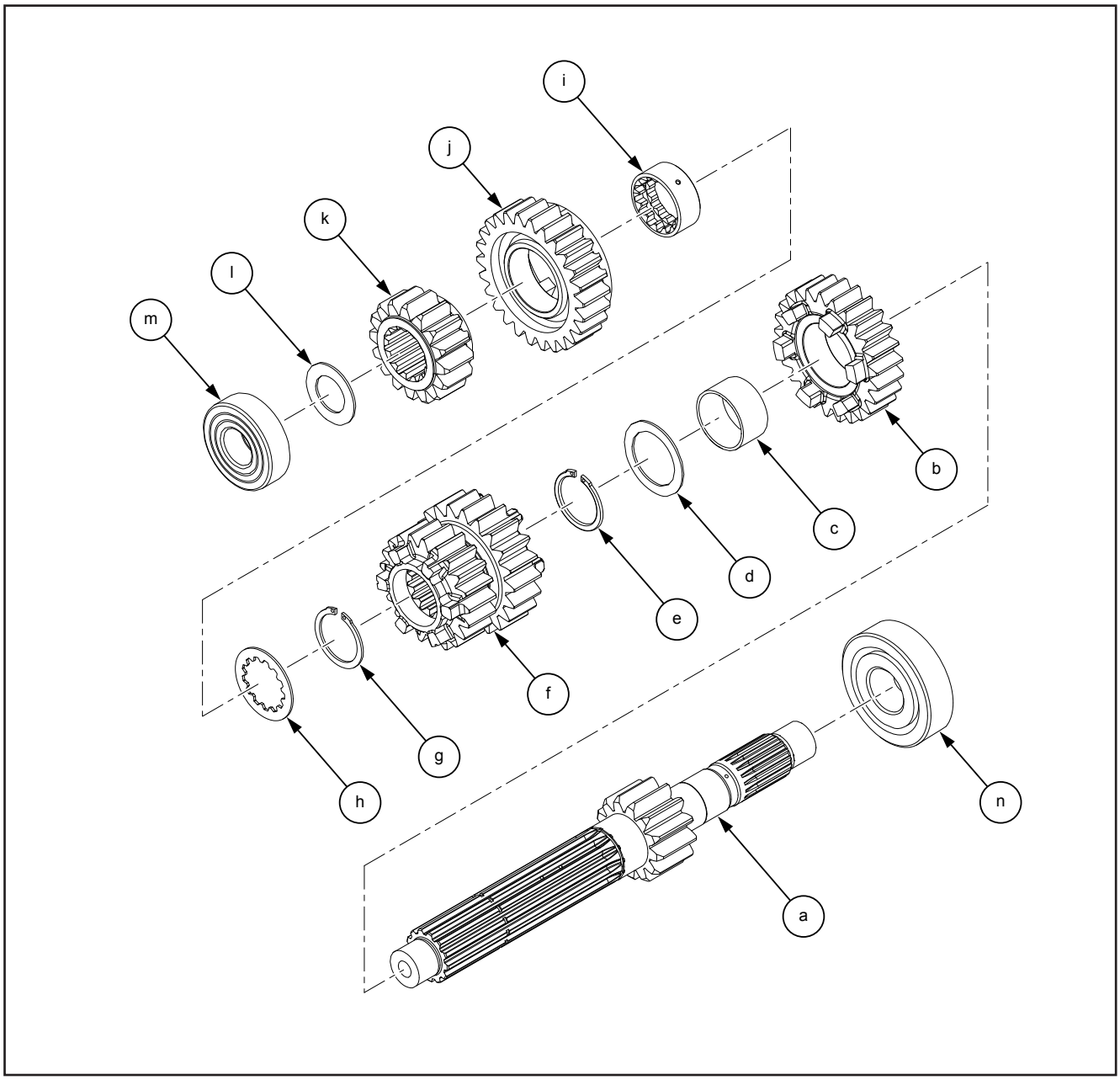

Item No.	Description	Quantity	Item No.	Description	Quantity
a	Countershaft with 1st Gear	1	h	Splined Plate Washer	1
b	5th Gear (24 teeth)	1	i	Splined Bush	1
c	Plain Bush	1	j	6th Gear (26 teeth)	1
d	Thrust Washer	1	k	2nd Gear (16 teeth)	1
e	Circlip	1	l	Thrust Washer	1
f	Double Gear (3rd and 4th Gear) (21 teeth)	1	m	Bearing	1
g	Circlip	1	n	Bearing	1

NOTE
• ***Do not*** *reuse thrust washers, circlips, collar bush. Always replace with new parts.* • *Ensure all components are cleaned and lubricated with recommended lubricants before assembly.* • *The countershaft gears can be recognized by size: the gear with the smallest diameter is 2nd gear, and the one with largest is 6th gear. Ensure that all parts are put back in correct sequence and all circlips and washers are incorporated in correct places.*

5.8.5. Countershaft Components

- Assemble ball bearing **(a)** on countershaft **(b)** from short end and ensure it is fully seated against the gear on driveshaft.

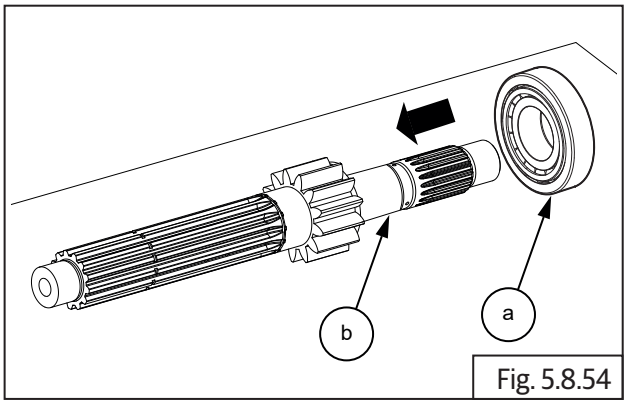

Fig. 5.8.54

- Assemble 5th gear **(a)** on countershaft **(b)** from longer end and ensure machined surface of gear is facing countershaft gear and lugs are facing outside.

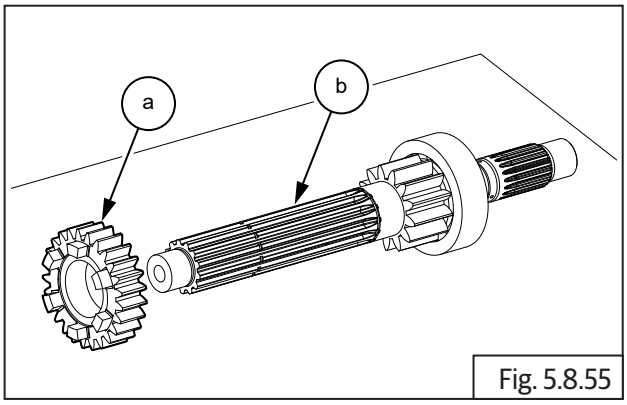

Fig. 5.8.55

- Assemble plain bush **(a)** on countershaft **(b)**.
- Ensure oil hole in plain bush is aligned with oil hole in countershaft.

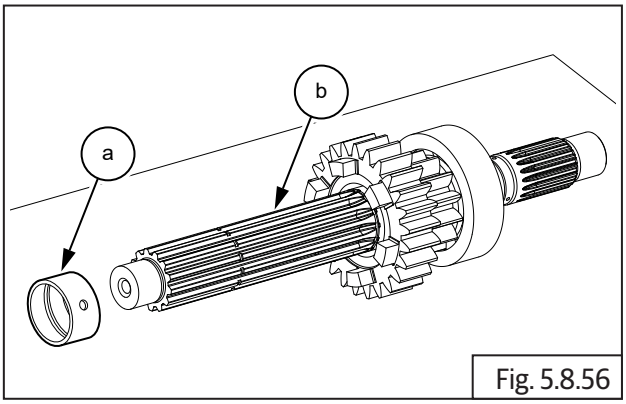

Fig. 5.8.56

NOTE
• *Ensure bush is fully seated against 5th gear on countershaft*

- Assemble 1st plain thrust washer **(a)** on countershaft **(b)** and ensure it is fully seated against 5th gear.

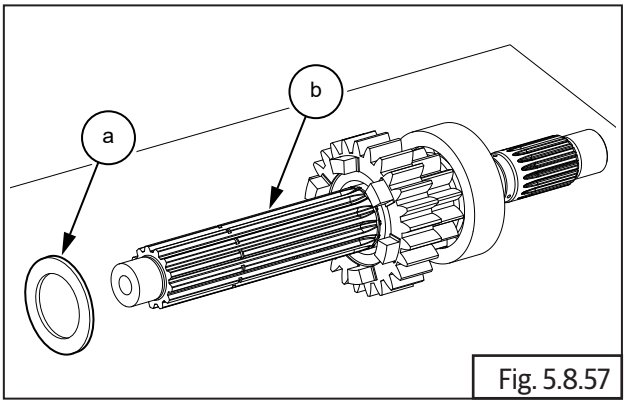

Fig. 5.8.57

- Assemble 1st circlip **(a)** on groove on countershaft **(b)** and ensure it is seated properly in the groove near 5th gear.
- Gently rotate circlip without expanding to ensure it is properly seated.

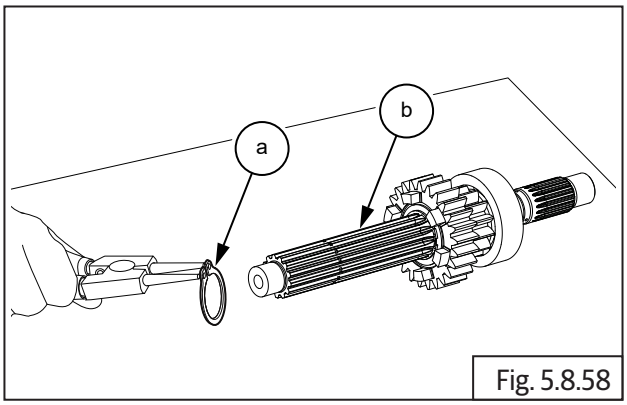

Fig. 5.8.58

	Circlip plier

- Assemble 3rd and 4th (double gear) **(a)** on countershaft **(b)** such that the 4th gear is facing the lugs on the 5th gear .

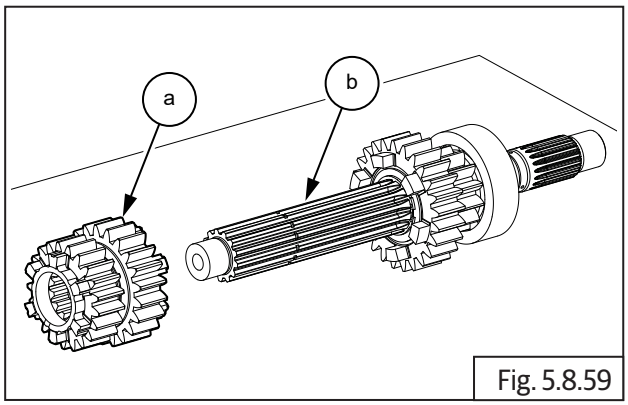

Fig. 5.8.59

- Assemble 2nd circlip **(a)** on groove on countershaft **(b)** and ensure it is seated properly on groove.

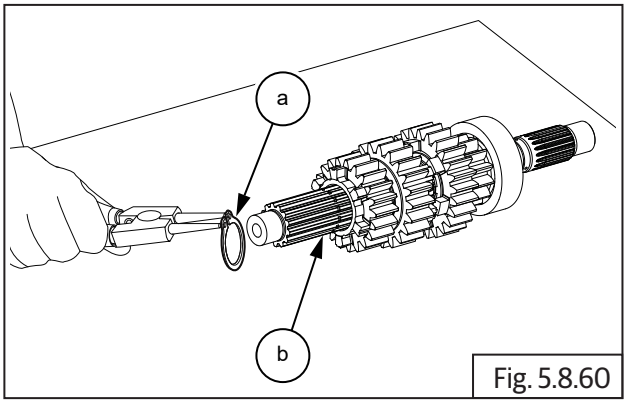

Fig. 5.8.60

	Circlip plier

- Assemble splined thrust washer **(a)** on countershaft **(b)** and ensure it is seated properly against circlip.

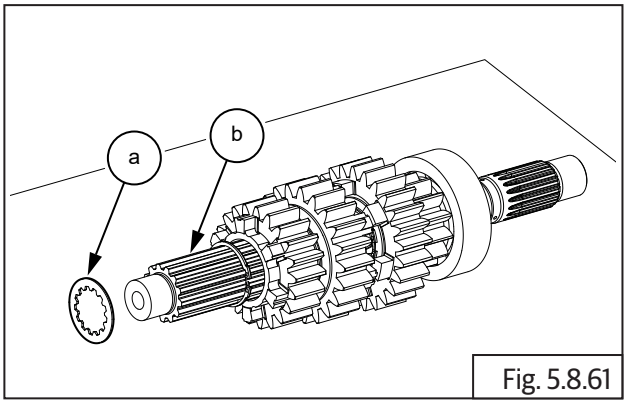

Fig. 5.8.61

- Ensure oil hole in splined bush is aligned with oil hole in countershaft and assemble splined bush **(a)** on countershaft **(b)**.

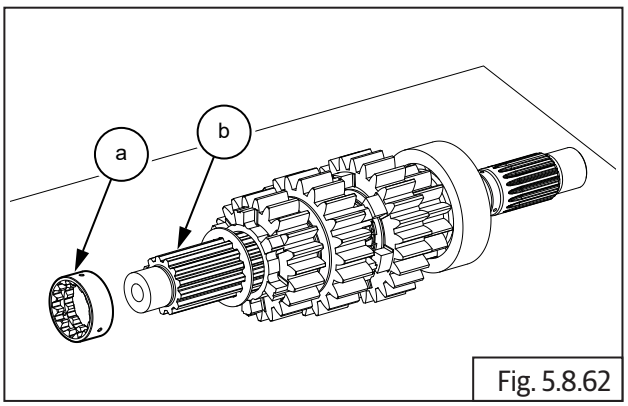

Fig. 5.8.62

NOTE
• *Ensure bush is fully seated against thrust washer on countershaft.*

- Assemble 6th gear **(a)** on countershaft **(b)** and ensure lugs are facing double gear.

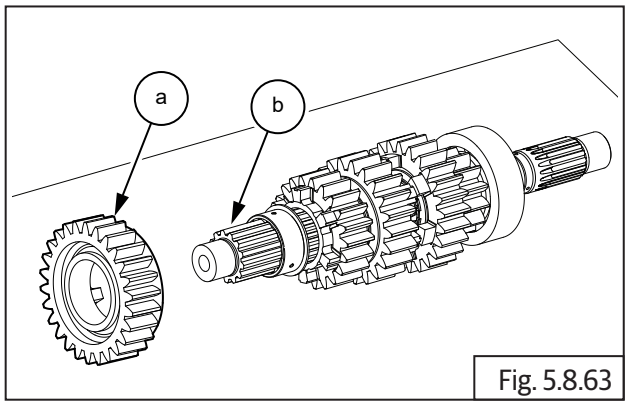

Fig. 5.8.63

- Assemble 2nd gear **(a)** on countershaft **(b)**.

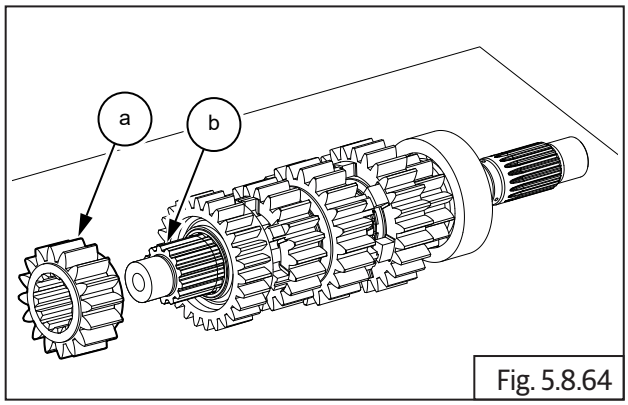

Fig. 5.8.64

- Assemble thrust washer **(a)** on countershaft **(b)**.

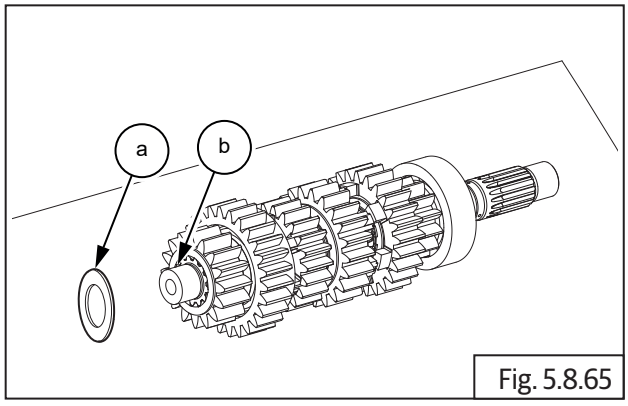

Fig. 5.8.65

- Assemble ball bearing **(a)** on countershaft **(b)** and ensure it is properly seated against thrust washer on countershaft.

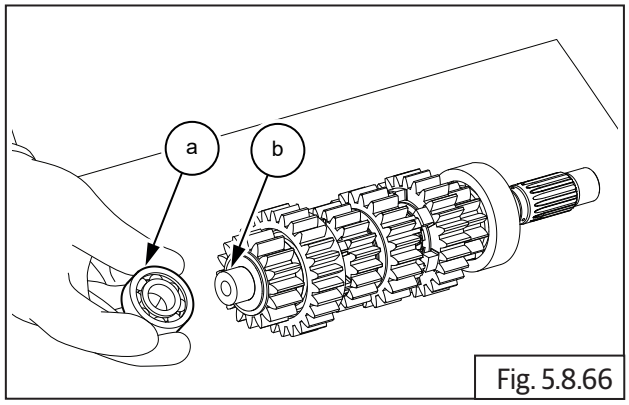

Fig. 5.8.66

- Locate countershaft bearing stopper plate **(a)** and assemble 2 Nos. Hex head bolts **(M5) (b)**.

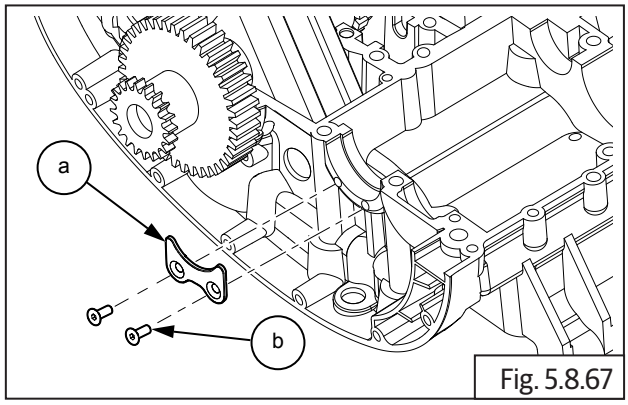

Fig. 5.8.67

	4 mm Allen socket with Ratchet

- Assemble the countershaft assembly **(a)** with gears on the upper crankcase **(b)** with its splined end towards the RH side (clutch side).
- Ensure the two bearings are correctly seated in their respective housings.

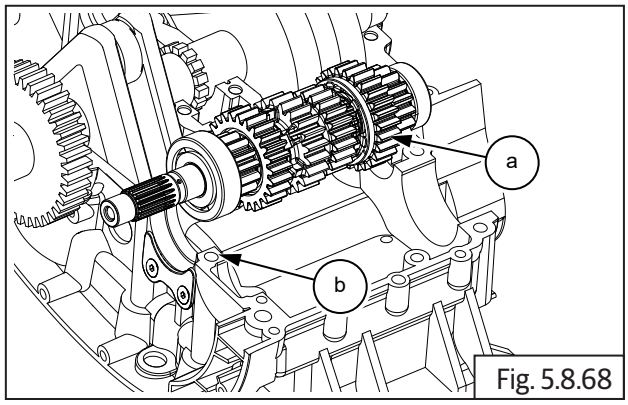

Fig. 5.8.68

Driveshaft Assembly Sequence

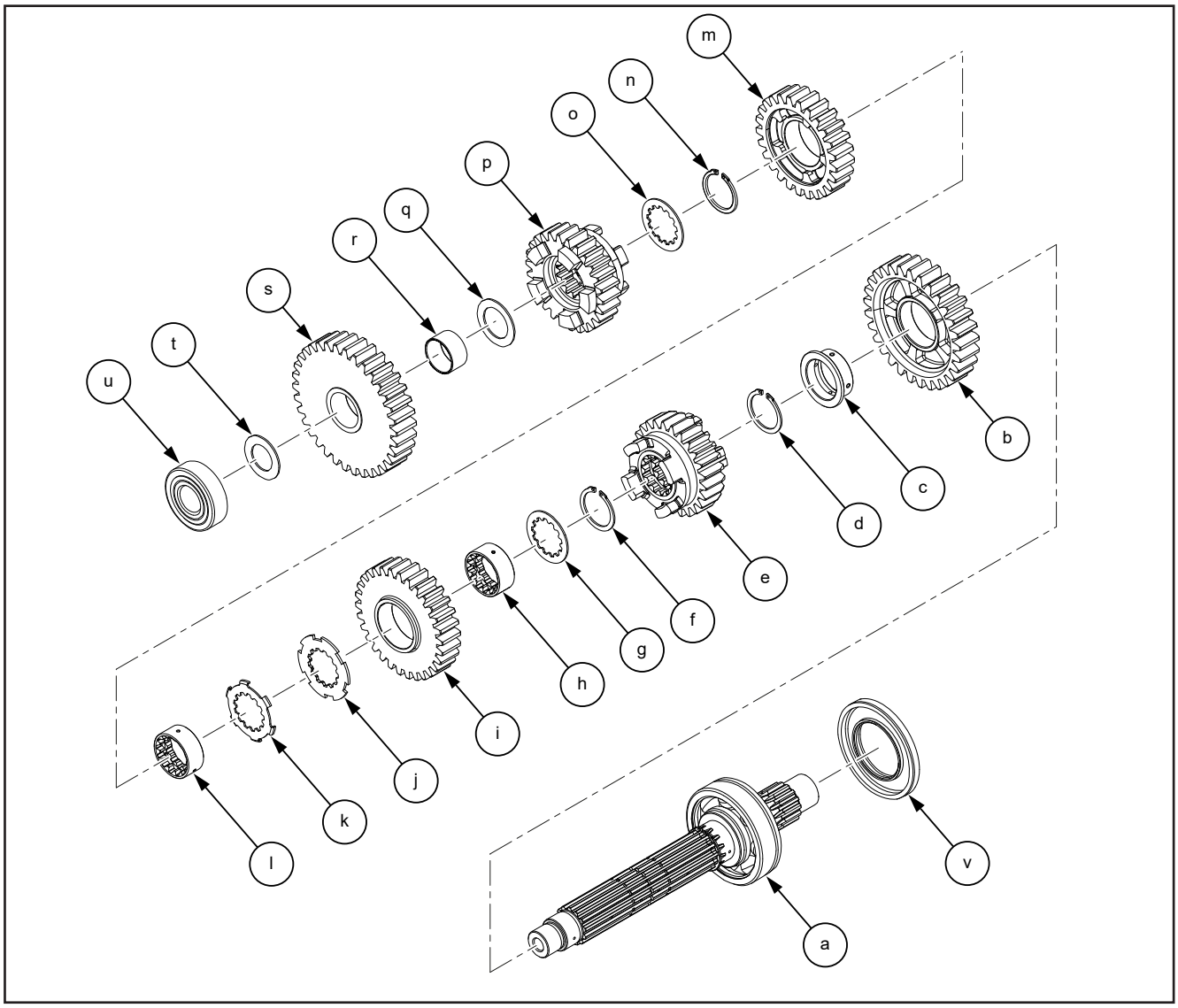

Item No.	Description	Quantity	Item No.	Description	Quantity
a	Driveshaft and Bearing	1	l	Splined bush	1
b	2nd Gear (29 teeth)	1	m	4th Gear (25 teeth)	1
c	Plain color bush	1	n	Splined thrust washer	1
d	Circlip	1	o	Circlip	1
e	6th Gear (25 teeth)	1	p	5th Gear (26 teeth)	1
f	Circlip	1	q	Thrust washer	1
g	Splined thrust washer	1	r	Plain bush	1
h	Splined bush	1	s	1st gear (34 teeth)	1
i	3rd Gear (30 teeth)	1	t	Thrust washer	1
j	Lock Splined washer	1	u	Bearing	1
k	Splined washer lock	1	v	Rubber seal	1

5.8.6. Driveshaft Components

NOTE
• ***Do not*** *resue thrust washers, circlips, collar bush. Always replace with new parts.*
• *Ensure each component is cleaned and lubricated with recommended lubricant.*
• *The driveshaft gears can be recognized by size: the gear with the smallest diameter is 6th gear, and the one with largest is 1st gear. Ensure that all parts are put back in correct sequence and all circlips and washers are incorporated in correct place.*

- Assemble ball bearing **(a)** on driveshaft **(a)** from short end and ensure it is fully seated against stopper on driveshaft.

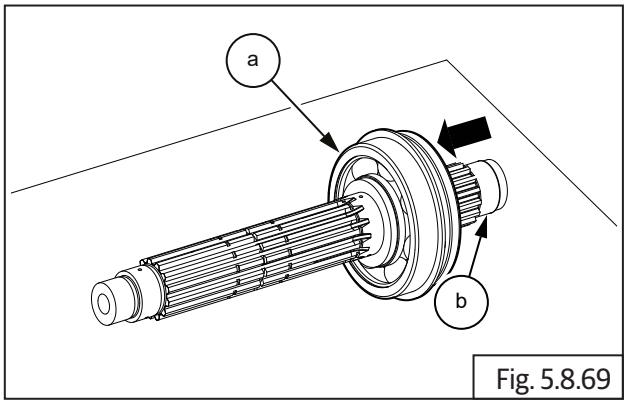

Fig. 5.8.69

- Ensure machined surface of 2nd gear is facing bearing and assemble 2nd gear **(a)** on driveshaft **(b)** from the longer splines end.

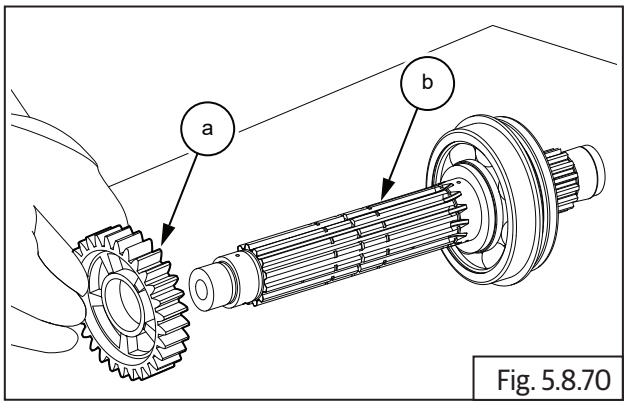

Fig. 5.8.70

- Ensure collar on bush **(a)** is facing outside and assemble 2nd gear collared bush on driveshaft. Ensure bush is seated properly inside 2nd gear.

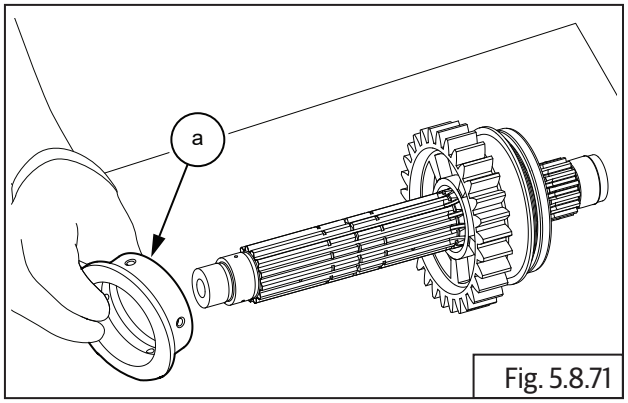

Fig. 5.8.71

NOTE
• *Ensure bush is seated properly inside 2nd gear.*

- Assemble 1st circlip **(a)** on innermost groove in driveshaft **(b)** and ensure it is seated properly on groove against 2nd gear bush.

NOTE
• *Gently rotate circlip without expanding to ensure it is properly seated in groove in driveshaft.*

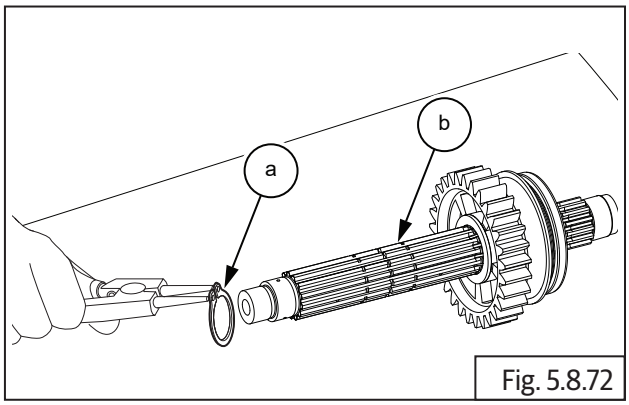

Fig. 5.8.72

	Circlip plier

- Assemble 6th gear **(a)** on driveshaft **(b)** ensuring lugs on larger face of gear are facing 2nd gear.

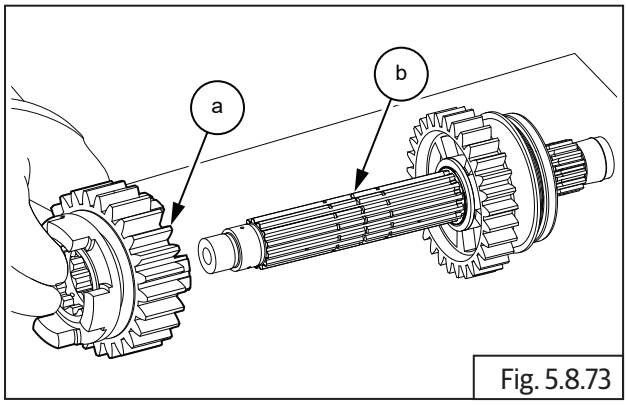

Fig. 5.8.73

- Assemble 2nd circlip **(a)** on inner groove on driveshaft **(b)** and ensure it is seated properly on groove.

NOTE
• *Gently rotate circlip without expanding to ensure it is properly seated in groove in driveshaft.*

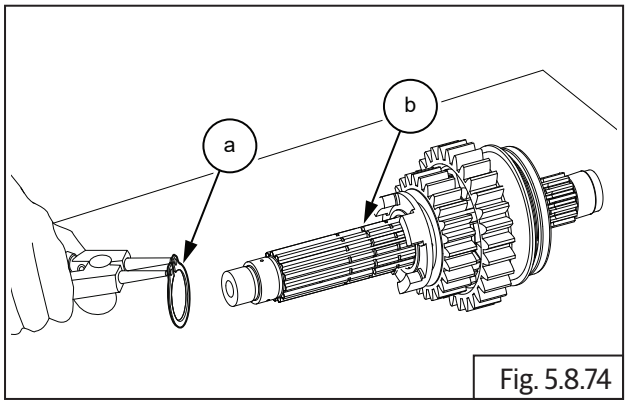

Fig. 5.8.74

	Circlip plier

- Assemble splined thrust washer **(a)** on driveshaft **(b)** and ensure it is seated properly against circlip.

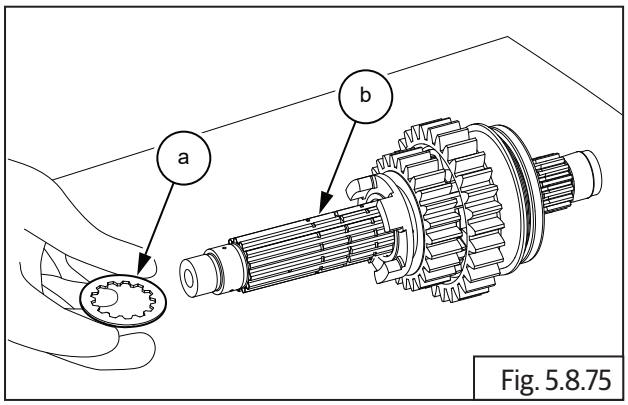

Fig. 5.8.75

- Ensure oil hole in 1st splined bush **(a)** is aligned with oil hole in driveshaft **(b)** and assemble splined bush on driveshaft.

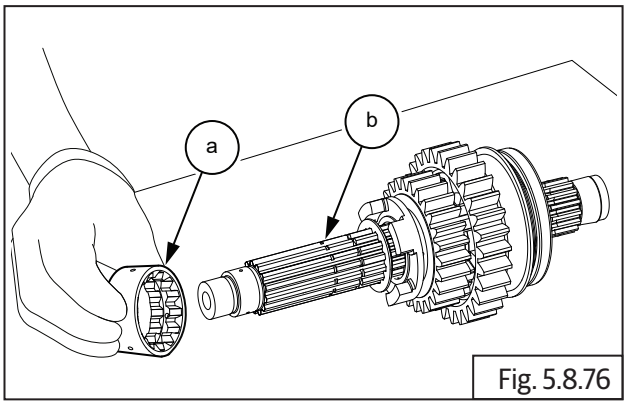

Fig. 5.8.76

NOTE
• *Ensure bush is fully seated against thrust washer in driveshaft.*

- Ensure collar on 3rd gear **(a)** is facing outside and assemble 3rd gear on driveshaft **(b)**.

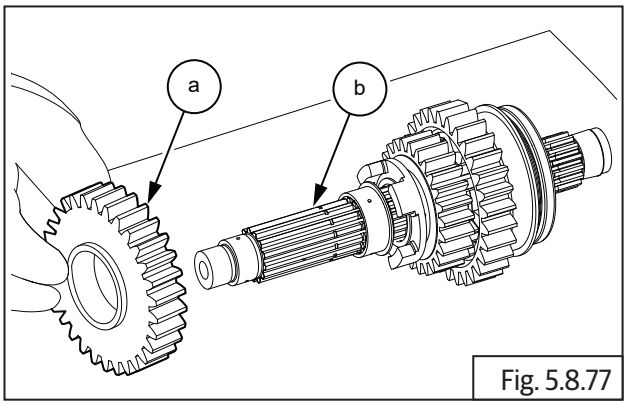

Fig. 5.8.77

NOTE
• *Ensure gear is fully seated on splined bush.*

- Insert thrust lock washer **(a)** with internal and external splines on driveshaft **(b)** and align internal splines with groove in driveshaft.
- Rotate lock washer such that the washer locks in place on driveshaft and cannot come out.

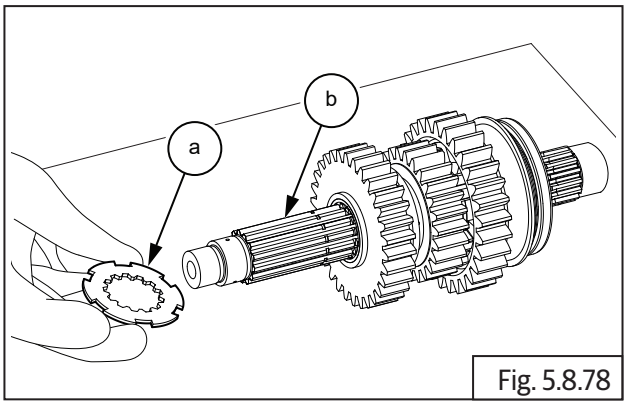

Fig. 5.8.78

- Assemble splined lock washer **(a)** on driveshaft **(b)** such that the outside tabs are facing the lock washer on driveshaft.
- Ensure outer tabs of lock washer are aligned and fully seated in outer splines of lock washer.

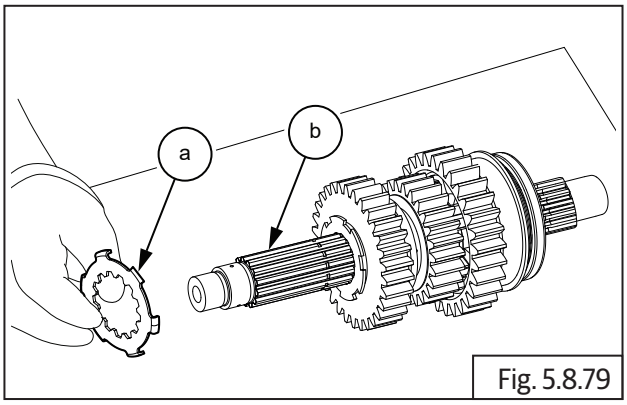

Fig. 5.8.79

- Ensure oil hole in 2nd splined bush **(a)** is aligned with oil hole in driveshaft **(b**) and assemble splined bush on driveshaft.

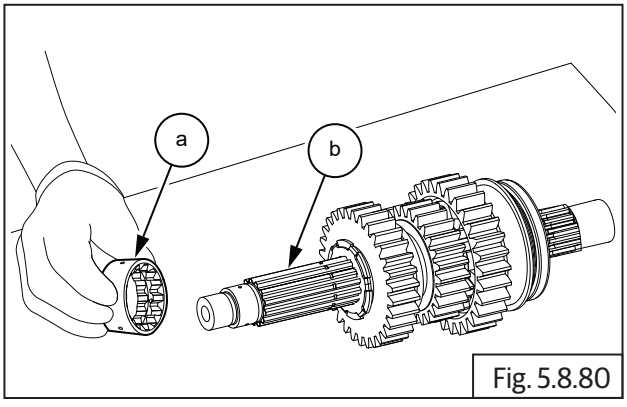

Fig. 5.8.80

NOTE

- *Ensure bush is fully seated against lock washer on driveshaft.*

- Assemble 4th gear **(a)** on the driveshaft **(b)** with its machined surface facing 3rd gear and recessed lugs of 4th gear facing outside.
- Ensure 4th gear is seated fully on splined bush.

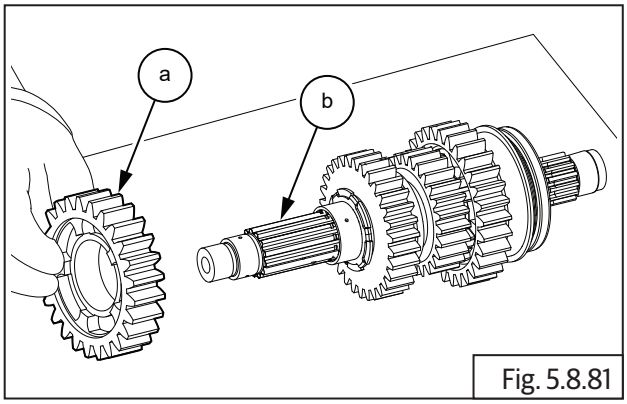

Fig. 5.8.81

- Assemble 2nd splined washer **(a)** on driveshaft **(b)** and ensure it is fully seated against 4th gear.

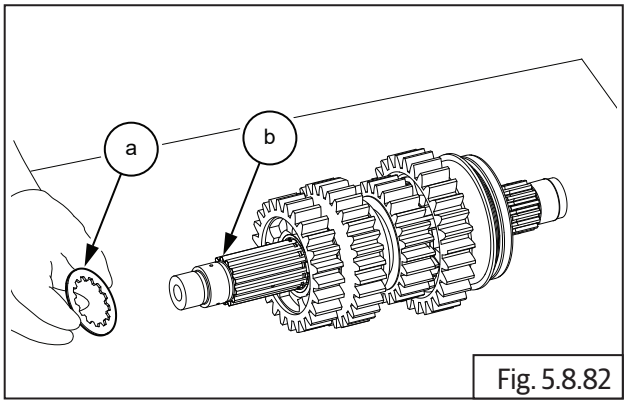

Fig. 5.8.82

NOTE

- *Gently rotate circlip without expanding to ensure it is properly seated in groove in driveshaft.*

- Assemble 3rd circlip **(a)** on groove on driveshaft **(b)** and ensure circlip is properly seated in groove.

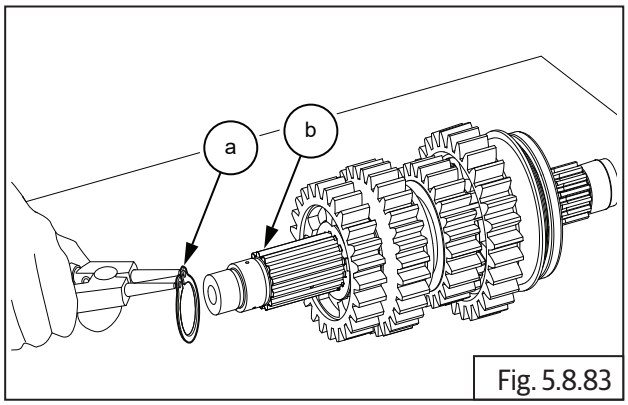

Fig. 5.8.83

	Circlip plier

- Assemble 5th gear **(a)** on driveshaft **(b)** with lugs facing 4th gear.

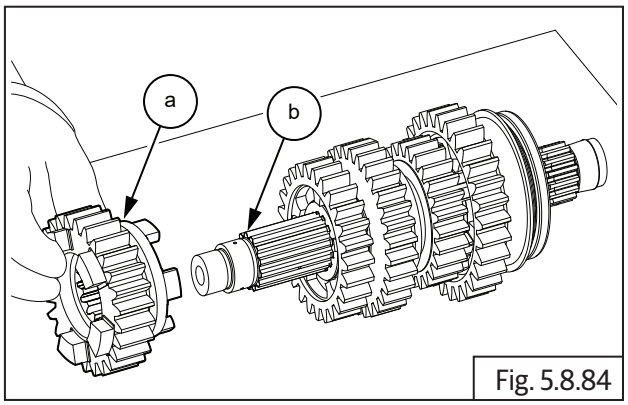

Fig. 5.8.84

- Assemble thrust washer **(a)** on driveshaft **(b)**.

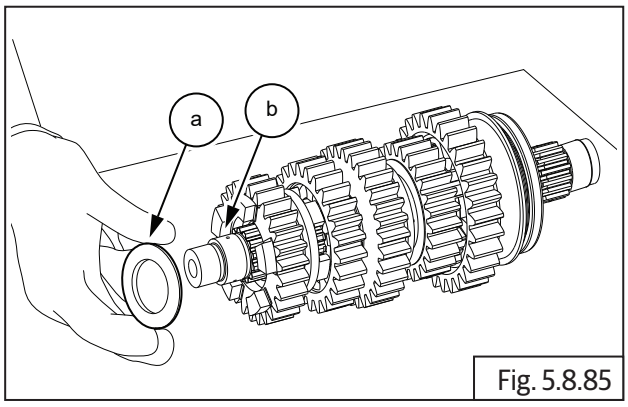

Fig. 5.8.85

- Ensure oil hole in plain bush **(a)** is aligned with oil hole in driveshaft **(b)** and assemble plain bush on driveshaft.

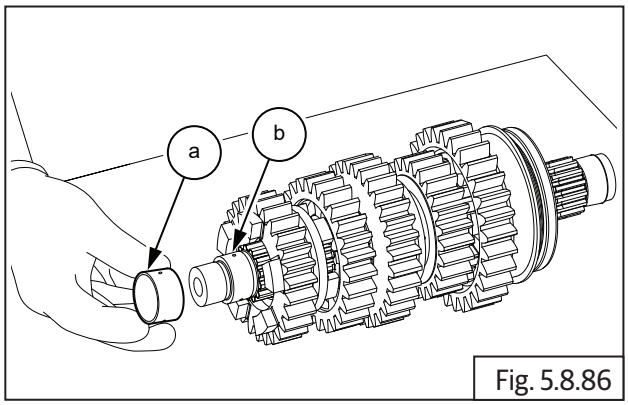

Fig. 5.8.86

NOTE
• *Ensure the bush is fully seated against thrust washer on driveshaft*

- Ensure lugs seating surface of 1st gear is facing lugs of 5th gear; assemble 1st gear **(a)** over bush on driveshaft **(b)**. Ensure the 1st gear is fully seated on bush.

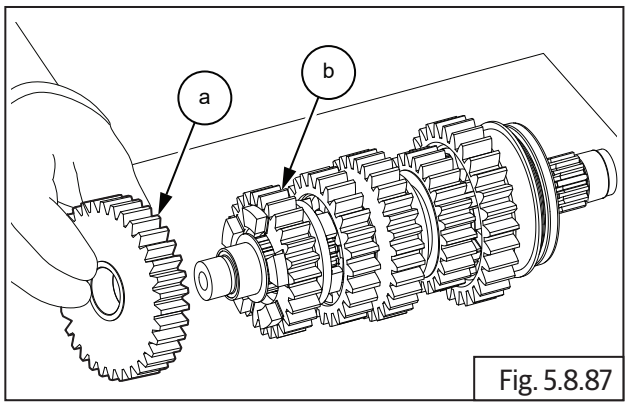

Fig. 5.8.87

- Assemble plain thrust washer **(a)** on driveshaft **(b)** and ensure it is fully seated against the 1st gear.

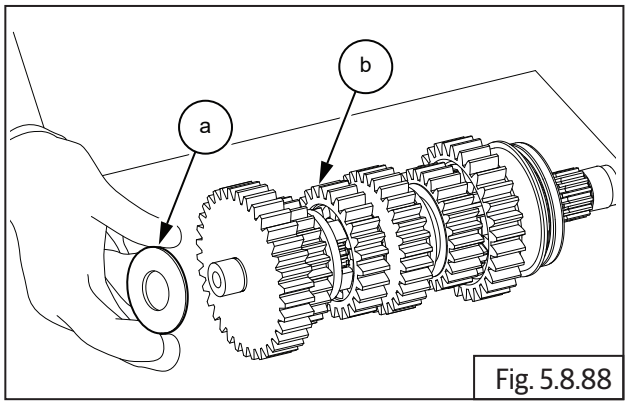

Fig. 5.8.88

- Assemble ball bearing **(a)** on driveshaft **(b)** and ensure it is properly seated against thrust washer on driveshaft.

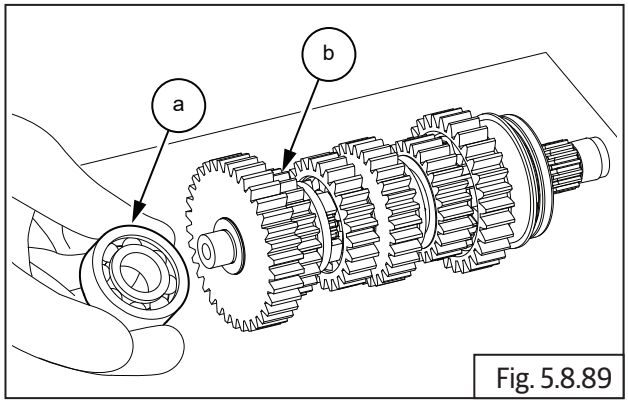

Fig. 5.8.89

- Locate drive shaft assembly with gears on crankcase upper duly ensuring that the splines of the drive shaft are towards the LH side (Magneto side) of upper crankcase and the gears on counter shaft and drive shaft are properly meshed.

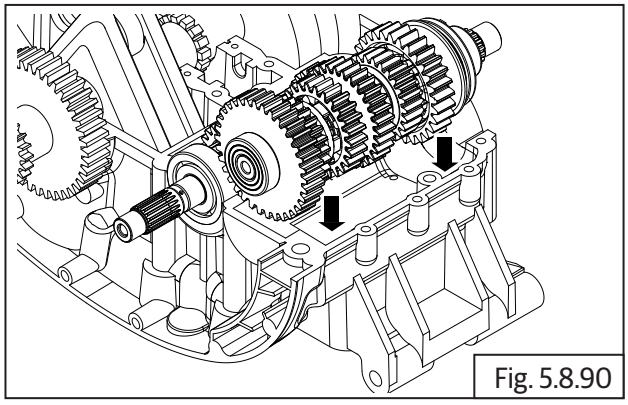
Fig. 5.8.90

Journal bearings in lower crankcse

- Install crankshaft journal bearings into crankcase. Refer journal bearing chart.

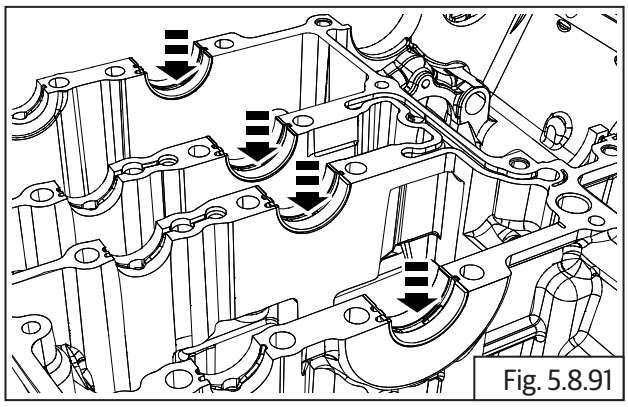
Fig. 5.8.91

5.8.7. Gear Shift Cam Drum

- Assemble needle roller bearing **(a)** in lower crankcase **(b)** from the inside on LH side (Magneto side).
- Insert gear shift cam drum **(c)** into lower crankcase **(b)** from thr RH side (clutch side), duly ensuring the 2 pegs to the gear shift cam drum are towards the RH side (clutch side).

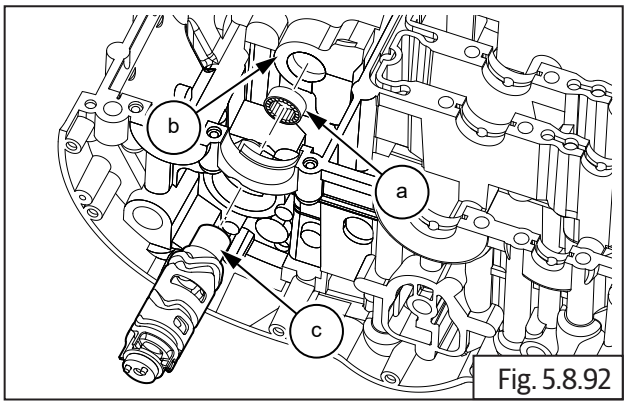

Fig. 5.8.92

SPL 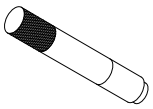	Part No: ST-27543-1 Part Name: Gear shifter Drum NRB Installer

- Assemble big bearing **(a)** on lower crankcase RH side **(b)** (clutch side) over the gear shift cam drum.

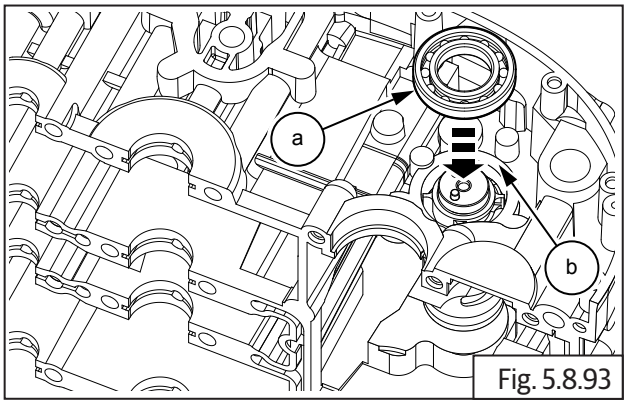

Fig. 5.8.93

- Gently tap on the bearing **(a)** to press fit with crankcase **(b)**.

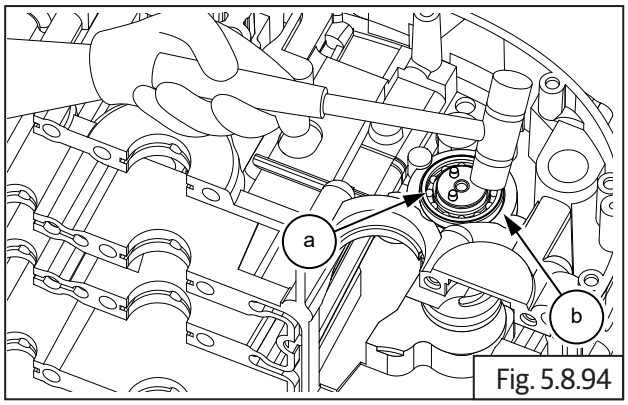

Fig. 5.8.94

	Plastic mallet

NOTE
• *Ensure there is free rotation of gear shift cam drum.*

5.8.8. Shifter fork

- Lubricate the 2 Nos. shifter fork spindles **(a)** and insert them into the lower crankcase from the RH side (Clutch side), till they are just protruding into the crankcase. **Do not insert them fully**.

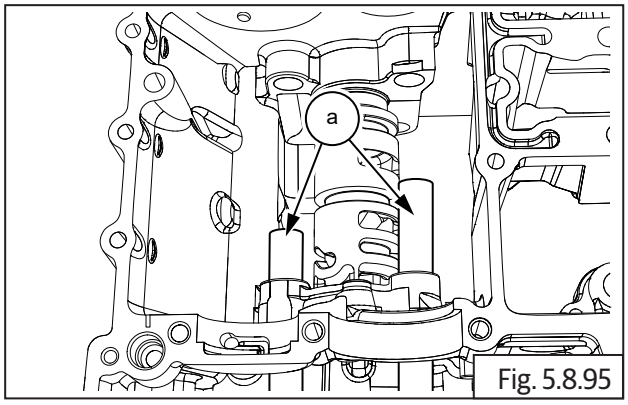

Fig. 5.8.95

- Lubricate and position shifter fork marked "4", inside lower crankcase duly ensuring the small peg **(a)** on the fork is aligned to the central groove in the gear shift drum.
- Ensure the forks **(a)** are facing upwards.

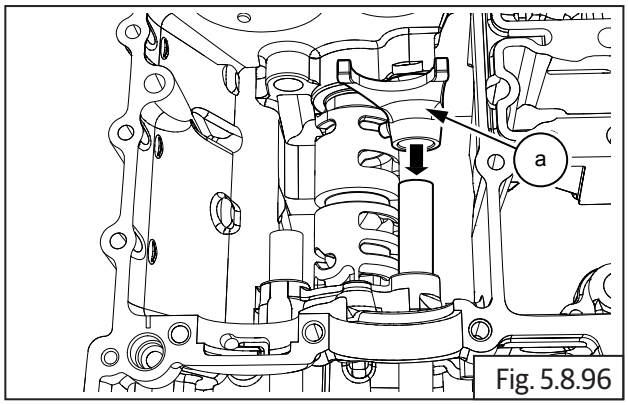

Fig. 5.8.96

- Ensure proper seating of the shifter fork peg in the groove in gear shift drum and press shifter fork spindle fully till it is seated into the boss in lower crankcase.

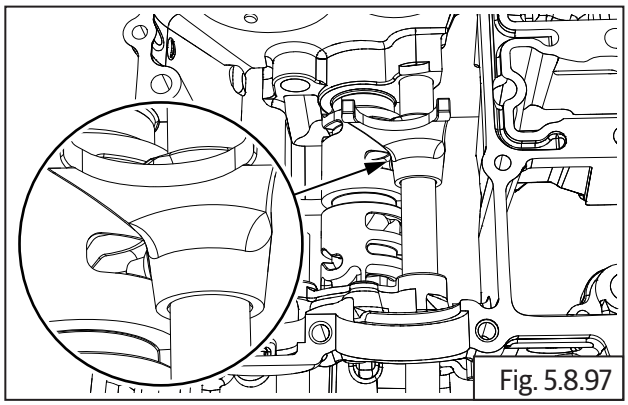
Fig. 5.8.97

- Lubricate and position shifter fork marked "5" inside lower crankcase duly ensuring the small peg **(a)** on the fork is aligned to the outer slot in the gear shift drum. Ensure the forks are facing upwards.

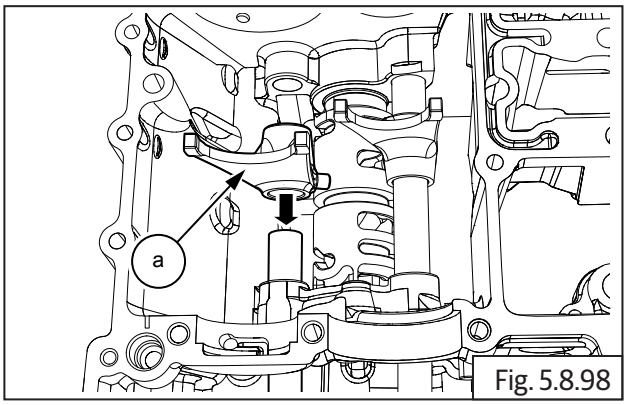

Fig. 5.8.98

- Ensure proper seating of the peg in gear shift drum

and press the shifter fork spindle till it is protruding sufficiently outside shifter fork "5".

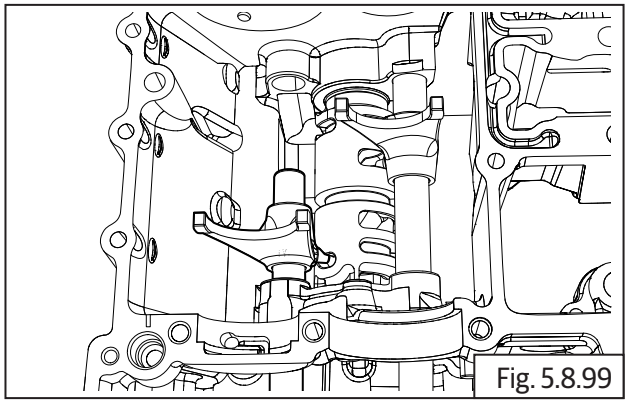
Fig. 5.8.99

- Lubricate and position shifter fork marked "6" inside lower crankcase duly ensuring the small peg **(a)** on the fork is aligned to the slot in the extreme end of the gear shift drum. Ensure the forks are facing upwards.

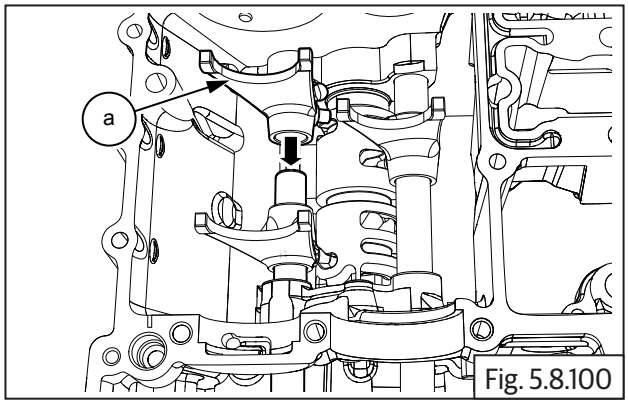

Fig. 5.8.100

- Ensure proper seating of the shifter fork pegs in the respective grooves in gear shift drum and press shifter fork spindle fully till it is seated into the boss in lower crankcase.

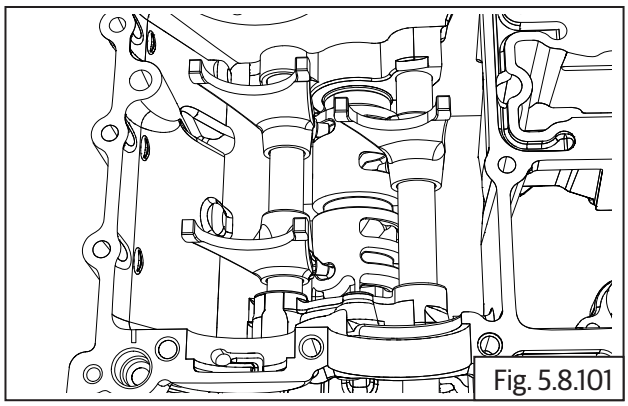
Fig. 5.8.101

- Gently rotate gear shift drum to ensure proper seating of the pegs of all the shifter forks in the respective grooves in gear shift drum.
- Check for free rotation of the gear shift drum and movement of gear shift forks on the spindles.
- Assemble bearing stopper plate **(a)** over the gear shift cam drum ball bearing on lower crankcase on the RH side (clutch side) and ensure the mounting holes are aligned.
- Locate 2 Nos. Hex socket head bolts **(M5) (b)** over the stopper plate and tighten to specified torque.

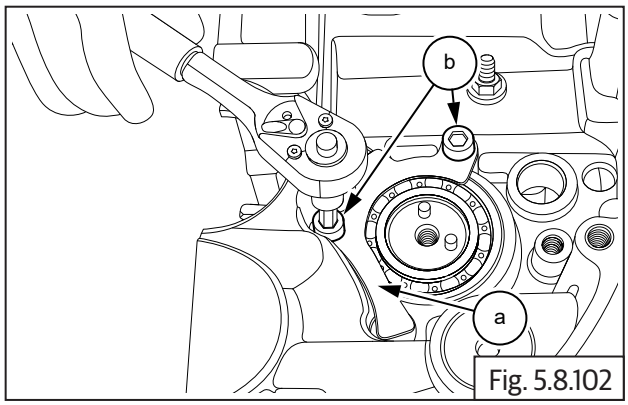

Fig. 5.8.102

	4 mm Allen Socket with Ratchet
Torque	10-12 N-m/1.0-1.2 kgf-m

- Assemble bearing **(a)** and oil seal **(b)** in lower crankcase **(c)** on the LH side (magneto side).

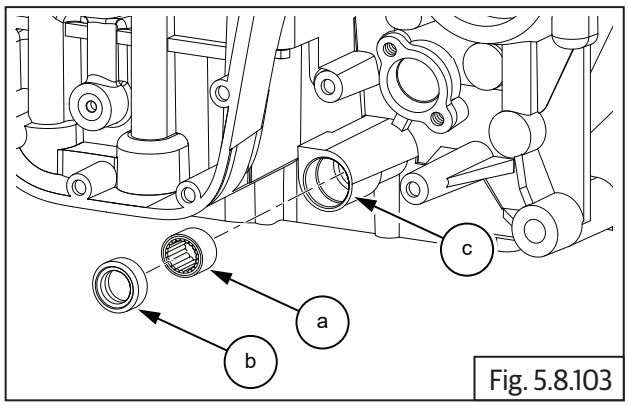

Fig. 5.8.103

5.8.9. Crankcases closing

- Support upper crankcase assembly firmly on suitable wedges with the mating surface facing up.

NOTE
• *Ensure the mating space both upper and lower crankcase are clean and dry.* • *Ensure chain pad is located in the slot in upper crankcase.*

- Apply recommended liquid gasket evenly, on the upper crankcase mating surface **(a)**.

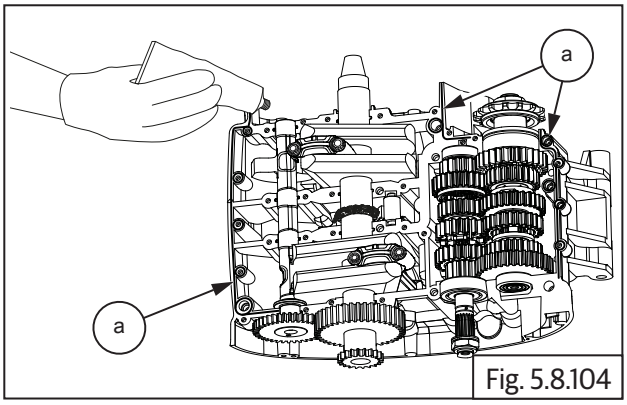

Fig. 5.8.104

- Ensure the 3 Nos. dowels **(a)** are located in the crankcase upper.
- Assemble lower crankcase over upper crankcase and ensure the following:
- The gear shifter forks are positoned in the respective grooves in the gears on mainshaft and countershaft (Rotate gear shifter drum to align the forks against the gears).

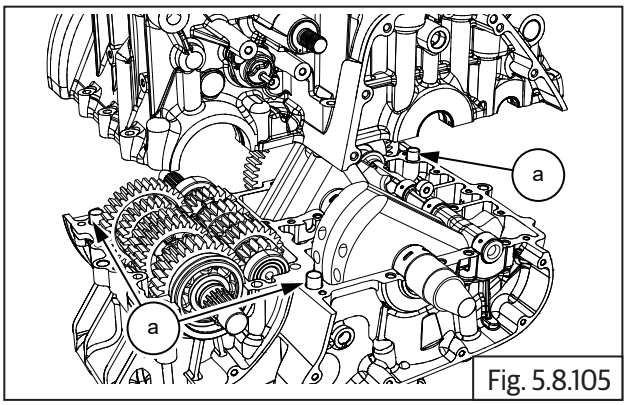

Fig. 5.8.105

Crankcase Bolts Tightening Sequence Procedure

Crankshaft & Balancer Shaft Main Bolts (Bolt No - 1 to 16) (M8x1.25)	
Lubrication	Apply Engine Oil to bolt threads and underhead are of the bolts
First Torque (As shown in the figure)	20 Nm
Additional Angle	As specified in the table below

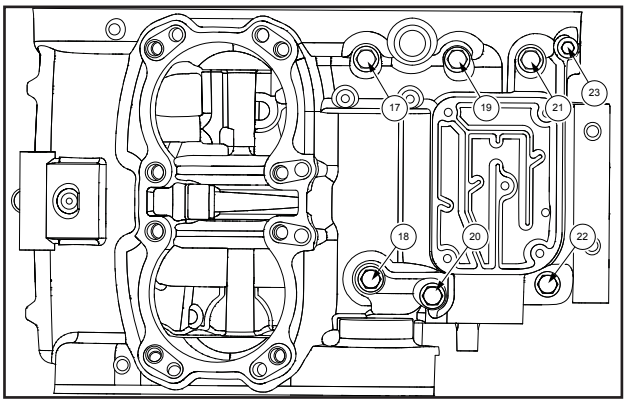

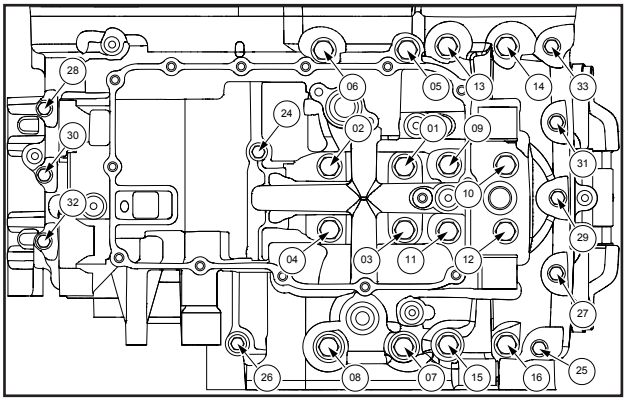

Torque Angle Values	
Bolt Number	**Angle**
1	40°
2	40°
3	40°
4	40°
5	75°
6	75°
7	60°
8	60°
9	40°
10	60°
11	40°
12	60°
13	60°
14	40°
15	40°
16	40°

Gear Box Bolts (Bolt no - 17 to 22) (M8x1.25)	
Lubrication	Apply Engine Oil to bolt threads and underhead are of the bolts
Torque (In order shown in the figure)	24-28 Nm

M6 Bolts (Bolt no - 23 to 33) (M8x1.0)	
Lubrication	N/A
Torque (In order shown in the figure)	9-12 Nm

- **A. Fasteners on Lower Crankcase**

Fasteners	Quantity
M8 x 1.25 x 80	9
M8 x 1.25 x 150	2
M8 x 1.25 x 120	5

NOTE
• Apply recommended engine oil on the bolt threads and underneath the head of the bolts before inserting into crankcase.

- Ensure lower crankcase is seated fully and uniformly on upper crankcase without any gaps.
- Locate 4 Nos. Hex flange bolts **M8 X 1.25 X 80 (a)** in the mounting holes inside oil sump area in lower crankcase and hand tighten just sufficiently in the sequence shown. **Do not TIGHTEN FULLY**.

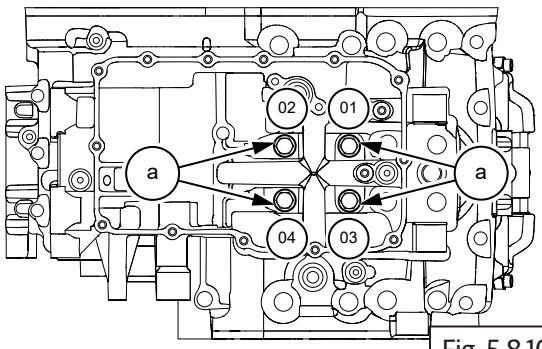

Fig. 5.8.106

	13 mm Socket with Ratchet
1st Torque	17 N-m/1.7 kgf-m
2nd Torque	40°

- Locate 2 Nos. Hex flange bolts **M8 X 1.25 X 150 (a)** in the mounting holes on the lower crankcase RH side (clutch side) and hand tighten just sufficiently in the sequence shown. **Do not TIGHTEN FULLY**.

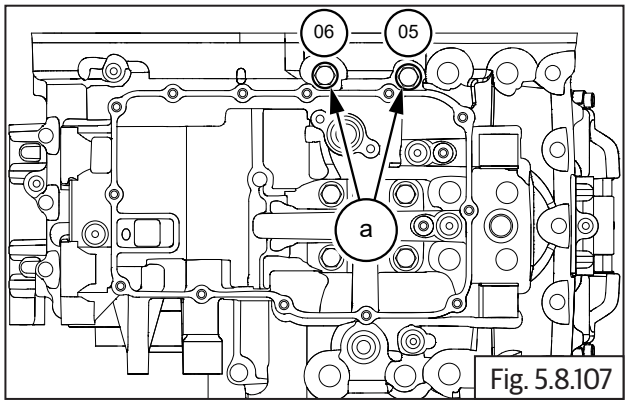

Fig. 5.8.107

	13 mm Socket with Ratchet

- Locate 2 Nos. Hex flange bolts **M8 X 1.25 X 120 (a)** in the mounting holes on the lower crankcase LH side (magneto side) and hand tighten just sufficiently in the sequence shown. **Do not TIGHTEN FULLY**.

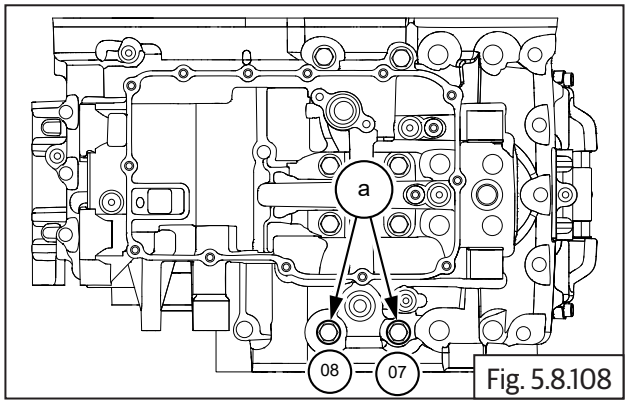

Fig. 5.8.108

	13 mm Socket with Ratchet

- Locate 1 No. Hex flange bolt **M8 X 1.25 X 80 (a)** in mounting hole inside oil sump area in lower crankcase and hand tighten just sufficiently. **Do not TIGHTEN FULLY.**

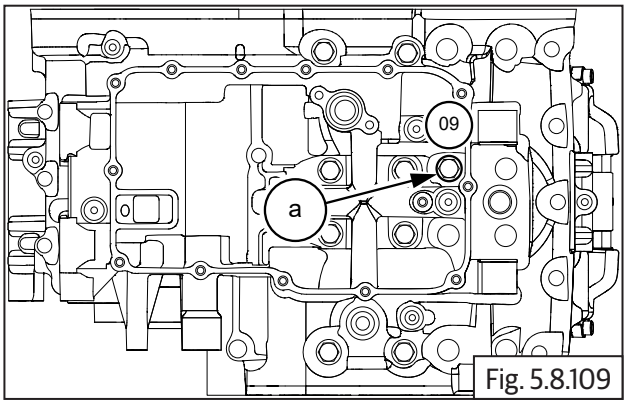

Fig. 5.8.109

	13 mm Socket with Ratchet

- Locate 1 No. Hex flange bolt **M8 X 1.25 X 120 (a)** in the hole in oil filter element area in lower crankcase front side and hand tighten just sufficiently. **Do not TIGHTEN FULLY**.

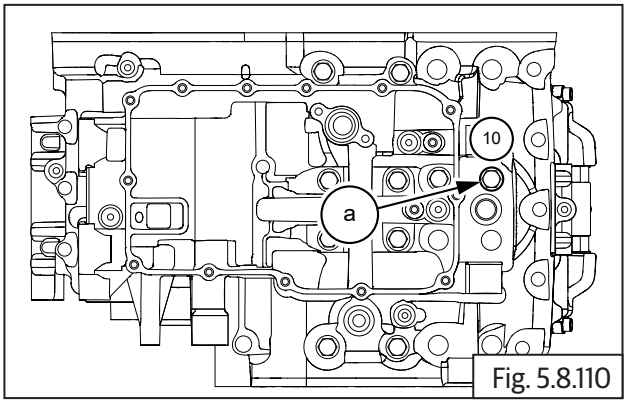

Fig. 5.8.110

	13 mm Socket with Ratchet

- Locate 1 No. Hex flange bolt **M8 X 1.25 X 80 (a)** in mounting hole inside oil sump area in lower crankcase and hand tighten just sufficiently. **Do not TIGHTEN FULLY.**

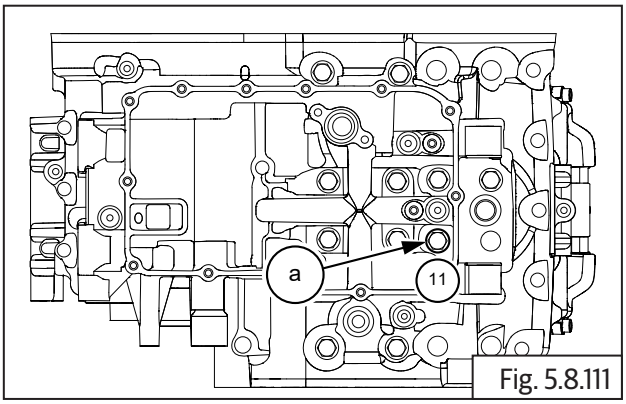

Fig. 5.8.111

	13 mm Socket with Ratchet

- Locate 1 No. Hex flange bolt **M8 X 1.25 X 120 (a)** in the hole in oil filter element area in lower crankcase front side and hand tighten just sufficiently. **Do not TIGHTEN FULLY.**

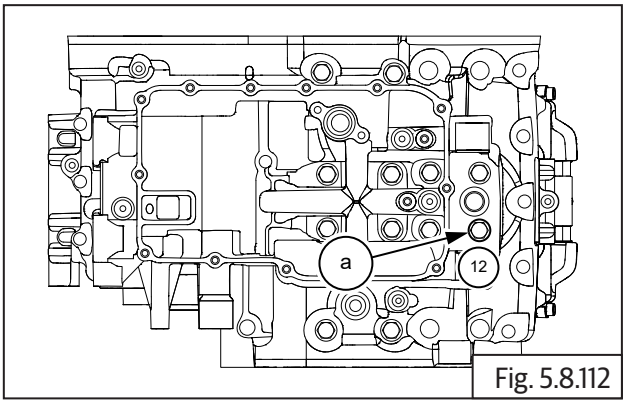

Fig. 5.8.112

	13 mm Socket with Ratchet

- Locate 1 No. Hex flange bolt **M8 X 1.25 X 120 (a)** in the mounting hole on the lower crankcase RH side (clutch side) and hand tighten just sufficiently. **Do not TIGHTEN FULLY**.

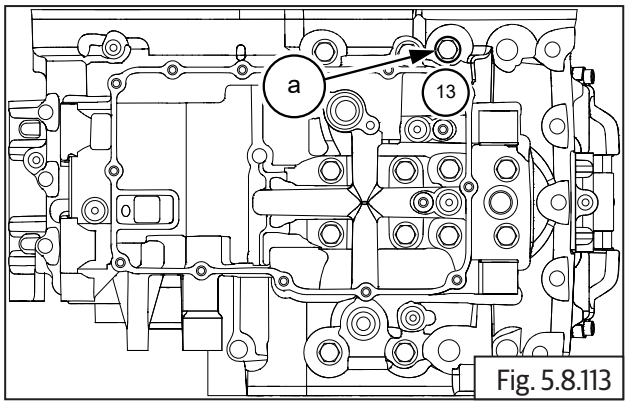

Fig. 5.8.113

	13 mm Socket with Ratchet

- Locate 1 No. Hex flange bolt **M8 X 1.25 X 80 (a)** in the mounting hole on the lower crankcase RH side (clutch side) and hand tighten just sufficiently. **Do not TIGHTEN FULLY**.

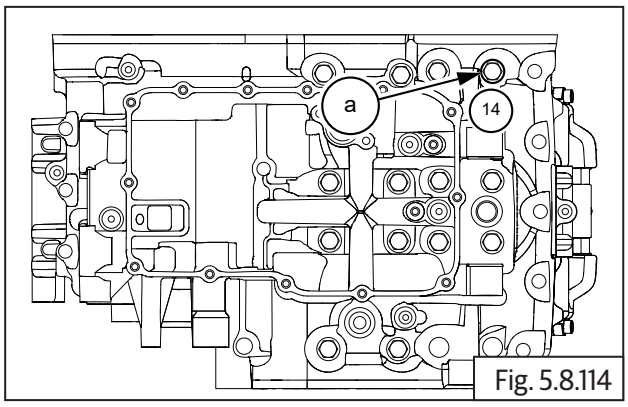

Fig. 5.8.114

	13 mm Socket with Ratchet

- Locate 2 Nos. Hex flange bolts **M8 X 1.25 X 80 (a)** in the mounting holes on the lower crankcase LH side (magneto side) and hand tighten just sufficiently. **Do not TIGHTEN FULLY**.

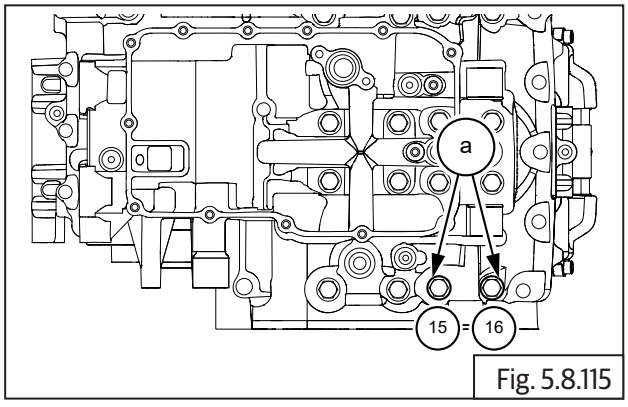

Fig. 5.8.115

	13 mm Socket with Ratchet

- Tighten the 16 Nos. Hex flange bolts **M8 X 1.25**, as mentioned in the sequence below.

  Initially the bolts are first torqued evenly.

  Subsequently a second torque is applied evenly.

  Finally angle torqued as specified below.

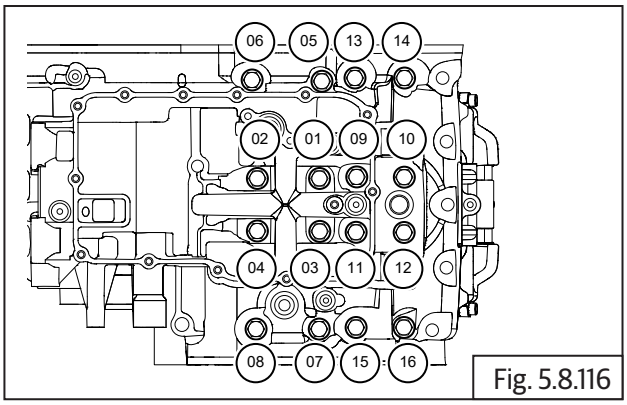

Fig. 5.8.116

	13 mm Socket with Ratchet
1st Torque	10 N-m/1 kgf-m

Bolt Location	Torque degrees
1 - 2 - 3 - 4 - 9 - 11 - 14 - 15 - 16	40° (deg)
7 - 8 - 10 - 12 - 13	60° (deg)
5 - 6	75° (deg)

- **B. Fasteners on upper Crankcase**

Fasteners	Quantity
M8 x 1.25 x 105	2
M8 x 1.25 x 45	1
M8 x 1.25 x 80	3
M6 x 1.25 x 35	1

- Gently invert the crankcase assembly such that

the lower crankcase is resting firmly on suitable wedges.

- Locate 1 No. Hex flange bolt **M8 X 1.25 X 105 (a)** before oil filler hole area in upper crankcase RH side (clutch side) and hand tighten just sufficiently. **Do not TIGHTEN FULLY**.

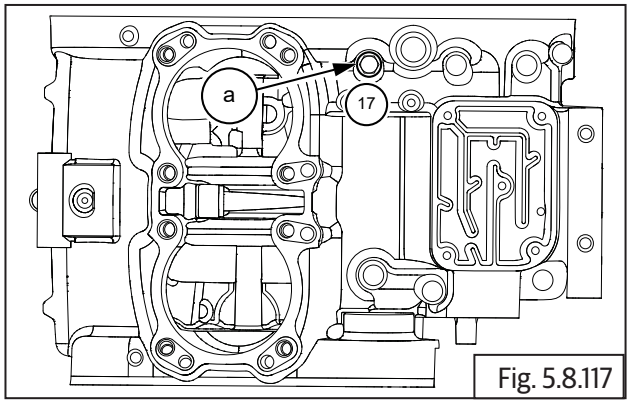

Fig. 5.8.117

	13 mm Socket with Ratchet

- Locate 1 No. Hex flange bolt **M8 X 1.25 X 45 (a)** in the front mounting hole in the starter motor recess in upper crankcase LH side (magneto side) and hand tighten just sufficiently. **Do not TIGHTEN FULLY.**

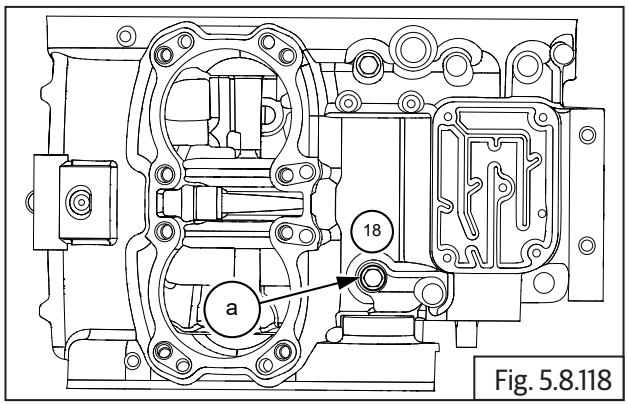

Fig. 5.8.118

	13 mm Socket with Ratchet

- Locate 1 No. Hex flange bolt **M8 X 1.25 X 105 (a)** behind oil filler hole area in upper crankcase RH side (clutch side) and hand tighten just sufficiently. **Do not TIGHTEN FULLY**.

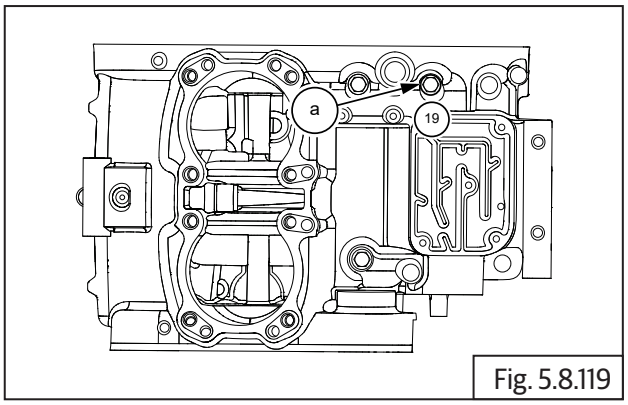

Fig. 5.8.119

	13mm Socket with Ratchet

- Locate 1 No. Hex flange bolt **M8 X 1.25 X 80 (a)** in the rear mounting hole in the starter motor recess in upper crankcase LH side (magneto side) and hand tighten just sufficiently. **Do not TIGHTEN FULLY**.

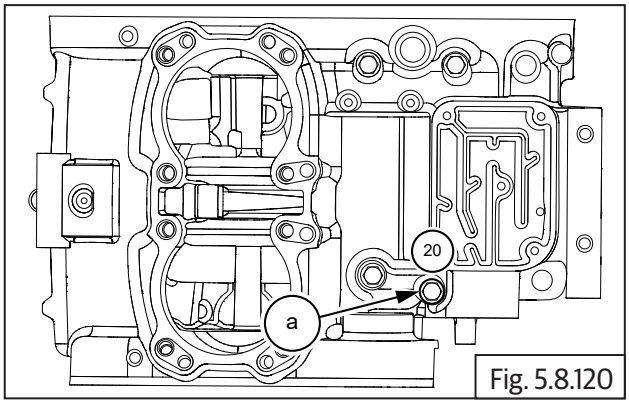

Fig. 5.8.120

	13 mm Socket with Ratchet

- Locate 2 Nos. Hex flange bolt **M8 X 1.25 X 80 (a)** on the LH and RH sides of the breather box housing assembly in the rear end of upper crankcase and

hand tighten just sufficiently. **Do not TIGHTEN FULLY.**

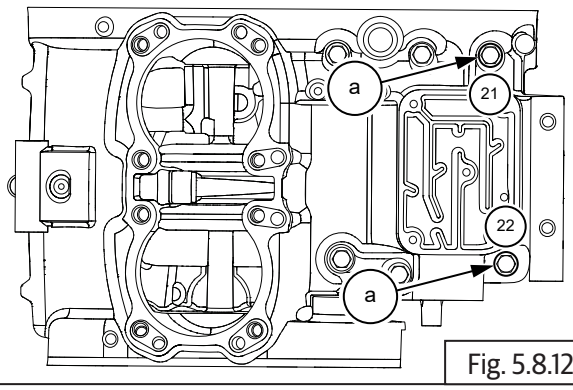

Fig. 5.8.121

	13 mm Socket with Ratchet

- Locate 1 No. Hex flange bolt **M6 X 1 X 35 (a)** at the rear end of upper crankcase RH side (Clutch side) and hand tighten just sufficiently. **Do not TIGHTEN FULLY.**

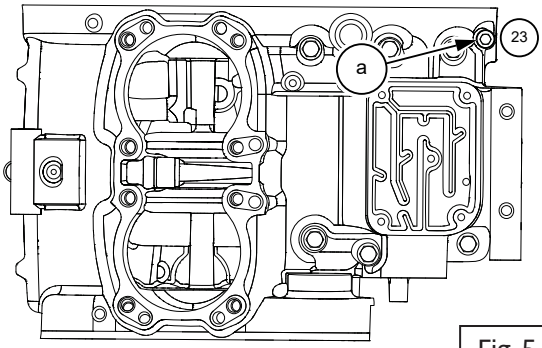

Fig. 5.8.122

	8 mm Socket with Ratchet

- Tighten the 7 Nos. Hex flange bolts on upper crankcase as mentioned in the sequence detailed below, to the specified torques.

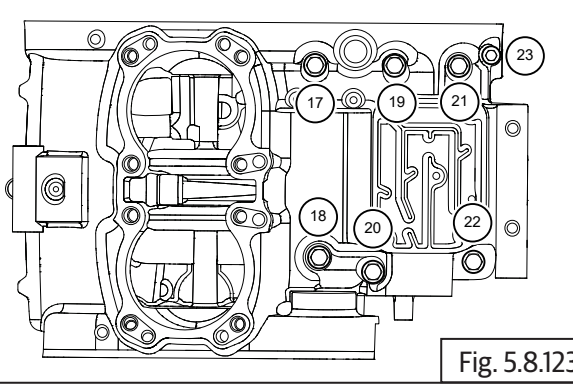

Fig. 5.8.123

Bolt Location	Size	Torque Value
17-22	13mm Socket & Torque wrench	24-28 Nm (2.4-2.8 Kgf-m)
23	8 mm Socket & Torque wrench	9-12 Nm (0.9-1.2 Kgf-m)

- **C. Fasteners on Lower Crankcase**

Fasteners	Quantity
M6 x 1.25 x 85	1
M6 x 1.25 x 35	8
M6 x 1.25 x 55	1

- Gently invert the crankcase assembly such that the upper crankcase is resting firmly on suitable wedges.
- Locate 1 No. Hex flange bolt **M6 X 1 X 85 (a)** in mounting hole inside oil sump area in lower crankcase and hand tighten just sufficiently. **Do not TIGHTEN FULLY**.

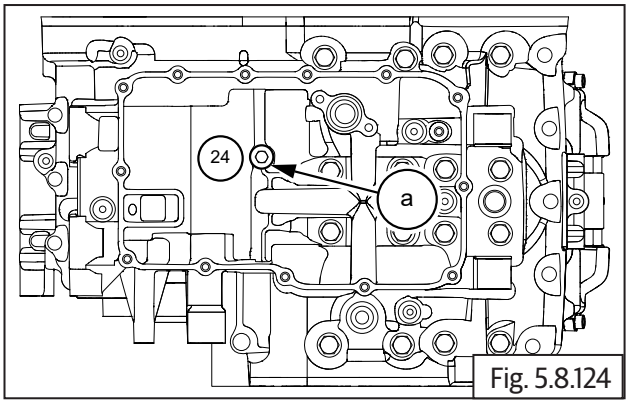

Fig. 5.8.124

	8 mm Socket with Ratchet

- Locate 1 No. Hex flange bolt **M6 X 1 X 35 (a)** in mounting hole the front LH side (magneto side) in lower crankcase and hand tighten just sufficiently. **Do not TIGHTEN FULLY**.

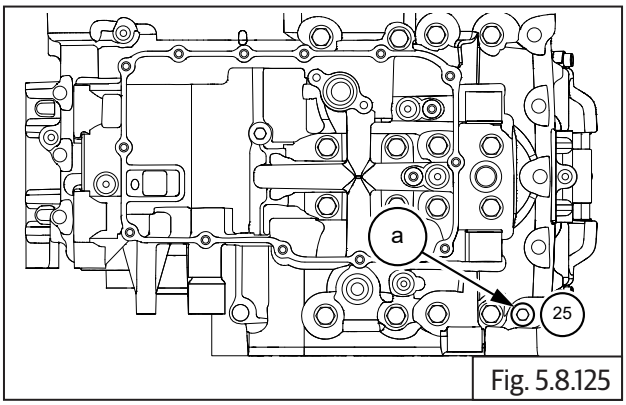

Fig. 5.8.125

	8 mm Socket with Ratchet

- Locate 1 No. Hex flange bolt **M6 X 1 X 55 (a)** in mounting hole on the LH side , behind magneto housing, in lower crankcase and hand tighten just sufficiently. **Do not TIGHTEN FULLY**.

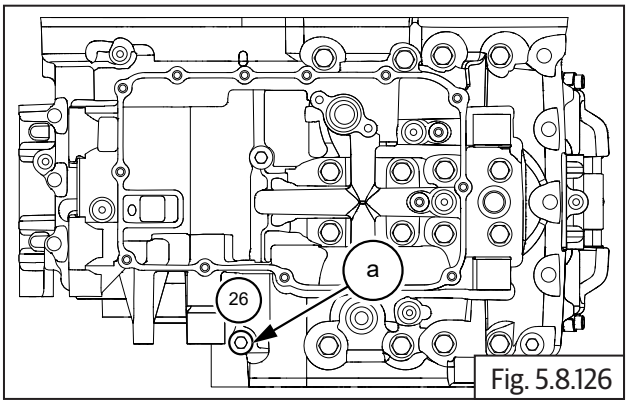

Fig. 5.8.126

	8 mm Socket with Ratchet

- Locate 7 Nos. Hex flange bolts **M6 X 1 X 35 (a)** 4 Nos. bolts in the front mounting holes and 3 Nos. bolts in the rear mounting holes in lower crankcase and hand tighten just sufficiently. **Do not TIGHTEN FULLY**.

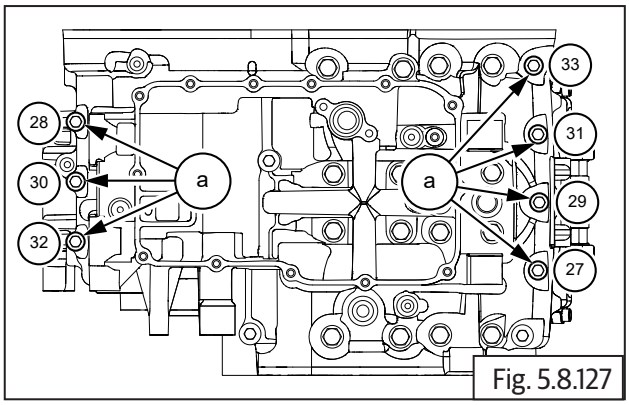

Fig. 5.8.127

	8 mm Socket with Ratchet

- Tighten the 10 Nos. Hex flange bolts , as mentioned in the sequence below,

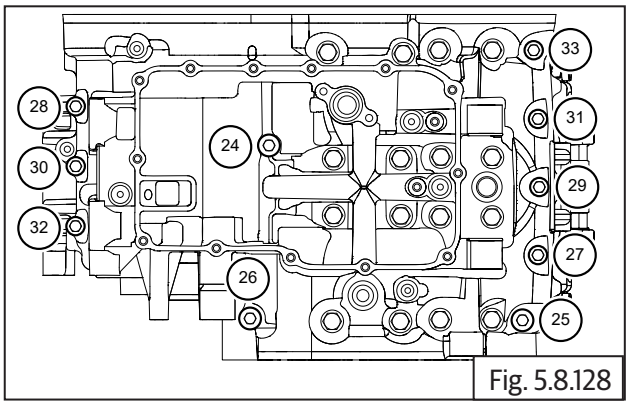

Fig. 5.8.128

	8mm Socket with Torque wrench
1st Torque	9 - 12 N-m/0.9 - 1.2 kgf-m

5.8.10. Oil Pressure Switch

- Assemble oil pressure switch **(a)** along with washer **(b)** on crankcase. **Do not TIGHTEN FULLY**.

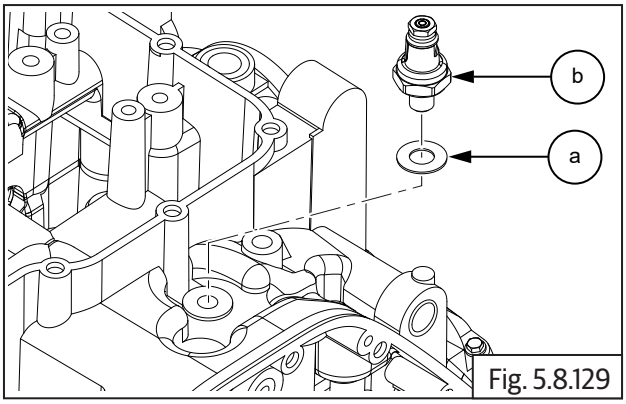

Fig. 5.8.129

- Tighten oil pressure switch **(a)** to specified torque.

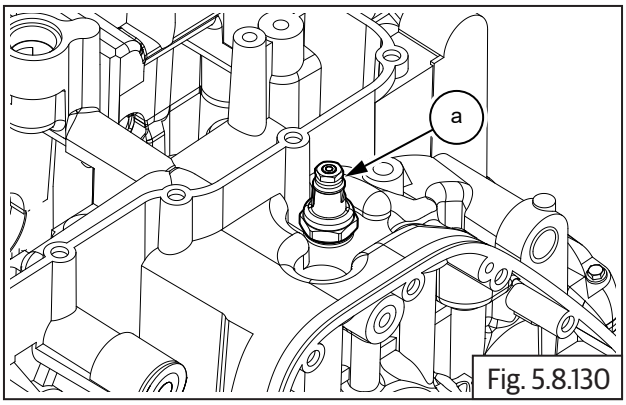

Fig. 5.8.130

	21 mm Socket with Torque Wrench
Torque	8-10 N-m/0.8-1.0 kgf-m

NOTE
• *Apply Loctite 542 on the threads of Oil Pressure Switch before installing* • *Replace washer whenever the oil pressure switch is removed.* **DO NOT** *reuse.*

5.8.11. Oil Bypass

- Install O-rings **(a)** in both ends of the bypass pipe.
- Install oil bypass pipe **(b)** into lower crankcase oil gallery.

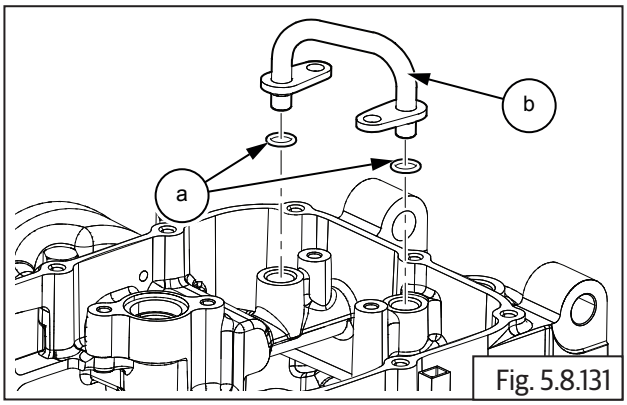

Fig. 5.8.131

NOTE
• *Replace O - Rings whenever the Bypass Pipe is removed.* **DO NOT** *reuse.*

- Tighten 2 Nos. Hex socket head screw **(M6) (a)** to specified torque.

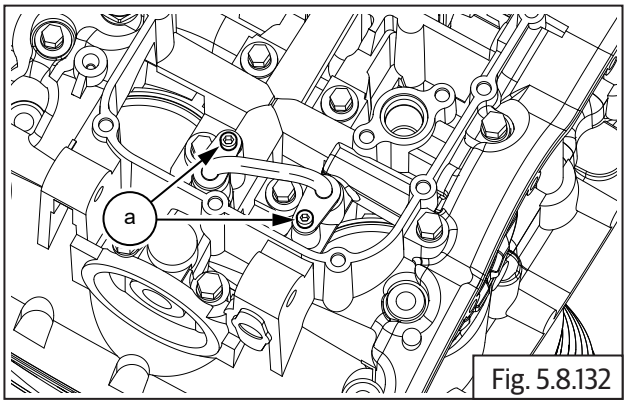

Fig. 5.8.132

	5 mm Allen socket with Ratchet
Torque	10-12 N-m/1.0-1.2 kgf-m

5.8.12. Oil Strainer

- Ensure O-ring is located properly on strainer.
- Install oil strainer **(a)** into lower crankcase oil gallery and tighten with 2 Nos. Hex flange head bolts **(M6) (b)** to specified torque.

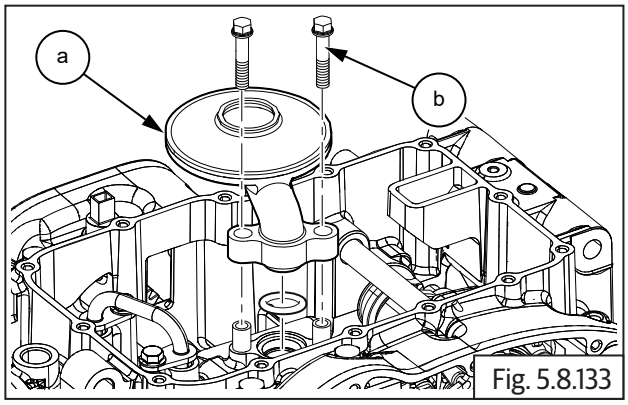

Fig. 5.8.133

	10 mm Socket with Ratchet
Torque	10-12 N-m/1.0-1.2 kgf-m

5.8.13. Oil Pan

- Locate oil pan gasket **(a)** on crankcase and assemble oil pan **(b)**.

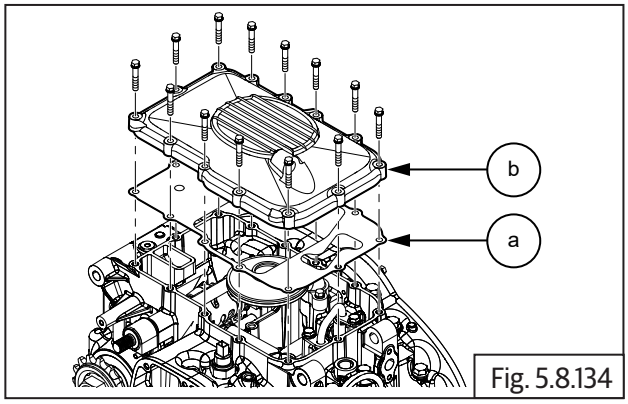

Fig. 5.8.134

- Assemble and tighten 13 Nos. Hex flange head bolts **(M6) (a)** in crisscross pattern to specified torque.

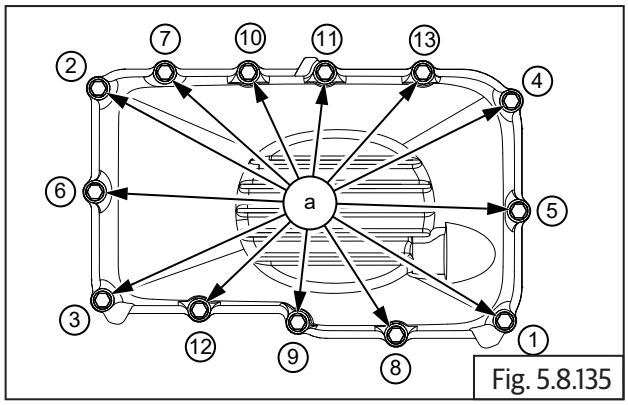

Fig. 5.8.135

	10 mm Socket with Ratchet
Torque	10-12 N-m/10-1.2 kgf-m

NOTE

- *Rotate the crankcase so that the connecting rods are facing upwards for further assembly.*
- *Support timing chain suitably to ensure it does not fall into the crankcase while rotating.*

5.8.14. Drain Plug

- Assemble magnetic drain plug **(a)** along with washer **(b)**.

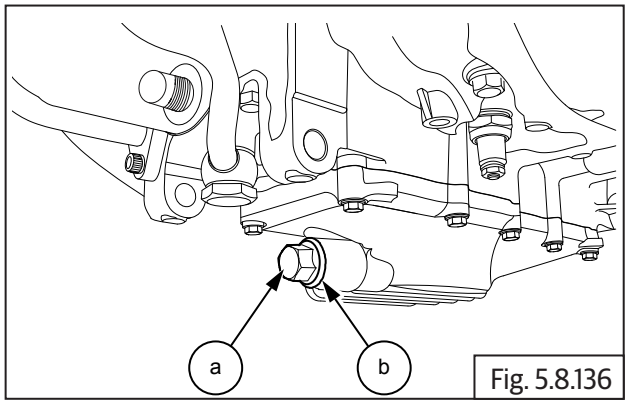

Fig. 5.8.136

- Tighten drain plug **(a)** to specified torque.

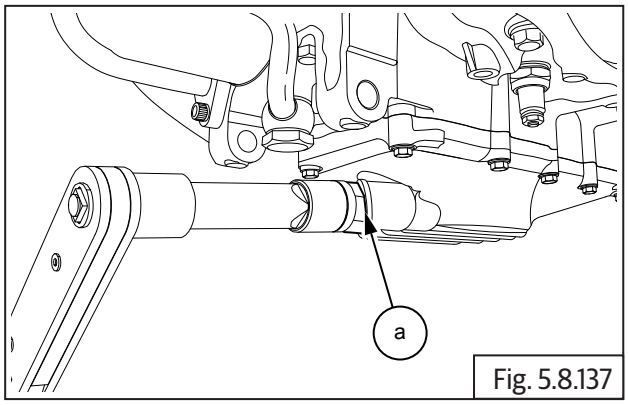

Fig. 5.8.137

	13 mm Socket with Ratchet and Torque wrench
Torque	33-37 N-m/3.3-3.7 kgf-m

NOTE
• *Apply Loctite 542 on the threads of Drain plug before installing*

5.8.15. Pistons and Rings

NOTE
• *Rings should be assembled with proper orientation (top marking should be always towards 1st ring end gap should be 45° before "EX" mark on piston crown).*
• *Middle 2nd ring end gap should be 180° from 1st ring end gap.*
• *Oil ring 3rd top rail end gap should be 180° from 2nd ring end gap (45° before "EX" on piston crown).*
• *Oil ring spacer end gap should be 45° before 3rd ring top rail end gap (90° before "EX" on piston crown).*
• *Oil ring (3rd) bottom rail end gap should be 180° from 3rd ring top rail end gap.*
• *One of the circlip should be assembled on the inner side of piston.*

Piston Rings

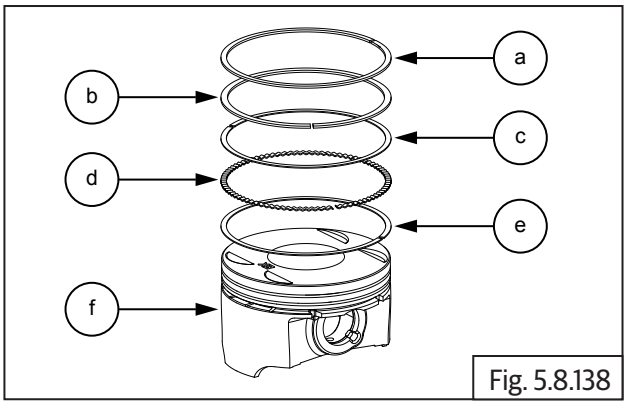

Fig. 5.8.138

a	Top ring
b	Second ring
c	Oil ring top rail
d	Oil ring spacer
e	Oil ring bottom rail
f	Piston

Orientation Pattern

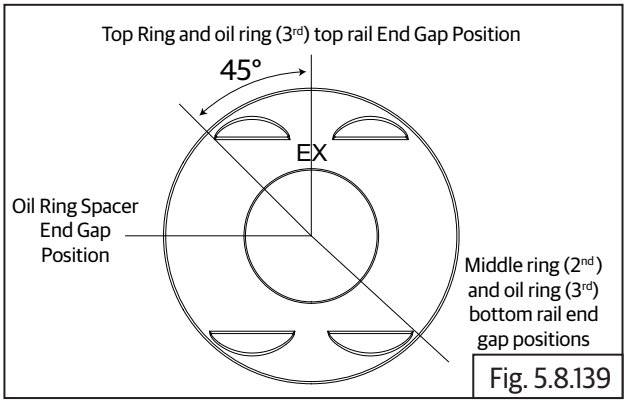

Fig. 5.8.139

- Top ring (1st) and oil ring (3rd) top rail end gap positions.

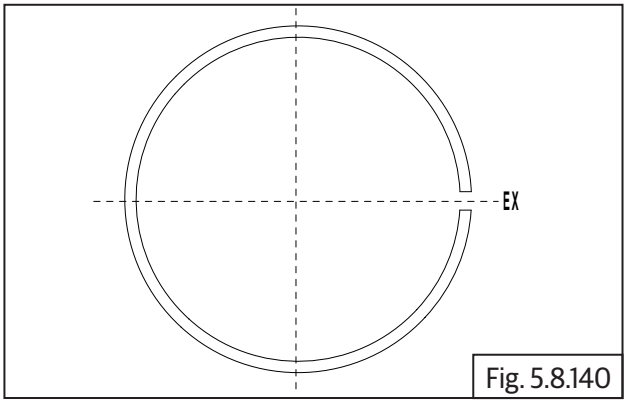

Fig. 5.8.140

- Middle (2nd) ring and oil ring (3rd) bottom rail end gap positions.

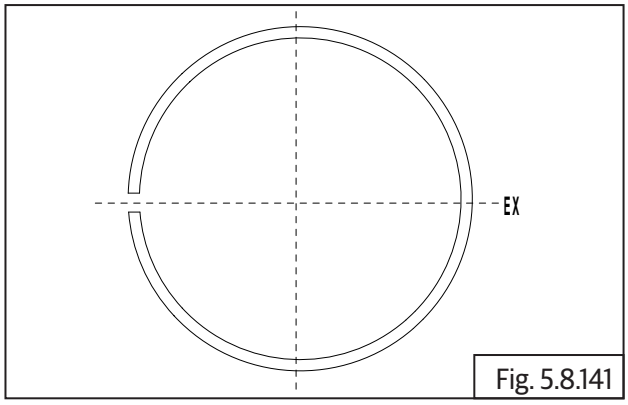

Fig. 5.8.141

- Oil ring spacer end gap position .

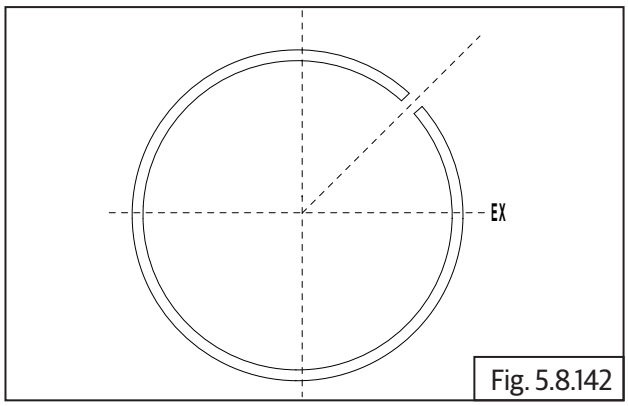

Fig. 5.8.142

5.8.16. Cylinder Barrel Dowels on Crankcase

- Install 2 Nos. dowel pins **(a)** and **(b)** on upper crankcase.

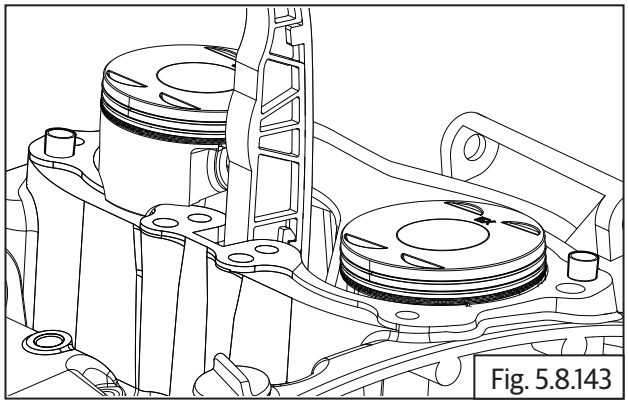
Fig. 5.8.143

5.8.17. Cylinder Barrel Gasket on Crankcase

- Ensure the gasket seating area in crankcase is clean.
- Ensure cam chain is routed through a new cylinder base gasket **(a)** and locate the gasket on crankcase **(b)**.
- Ensure proper seating of the gasket on the dowels on the crankcase.

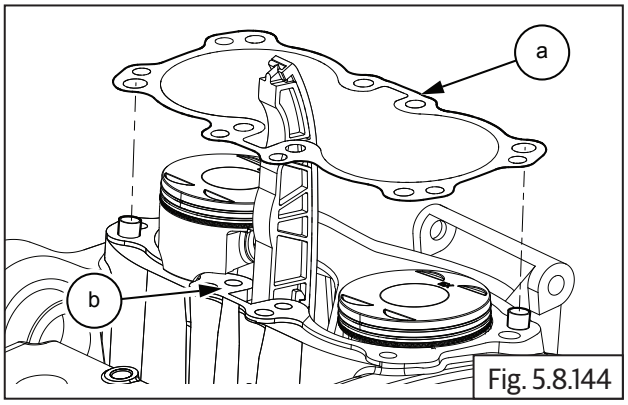

Fig. 5.8.144

5.8.18. Piston LH in Cylinder Barrel

- Ensure piston LH is at its top most position by rotating crankshaft clockwise.
- Locate special tool **(a)** on piston LH.

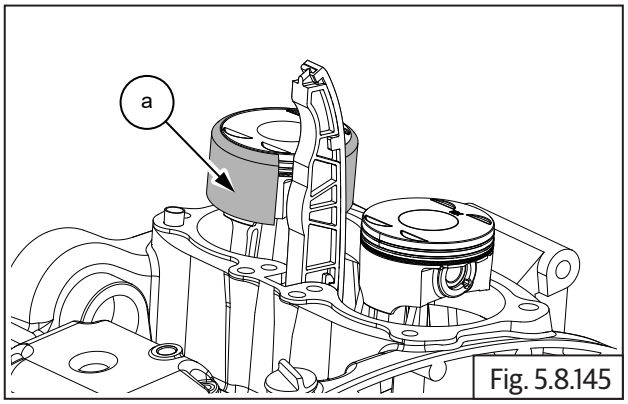

Fig. 5.8.145

SPL 	Part No: ST-30296-A
	Part Name: Piston ring compressor

- Position and hold cylinder barrel above crankcase, route cam chain through cylinder barrel bottom and ensure it is supported firmly and suitably at the top.
- Ensure cylinder barrel LH is well lubricated, LH piston is held firmly and straight.

- Gently lower cylinder barrel **(a)** over the special tool piston LH, till the piston is halfway into the cylinder barrel.

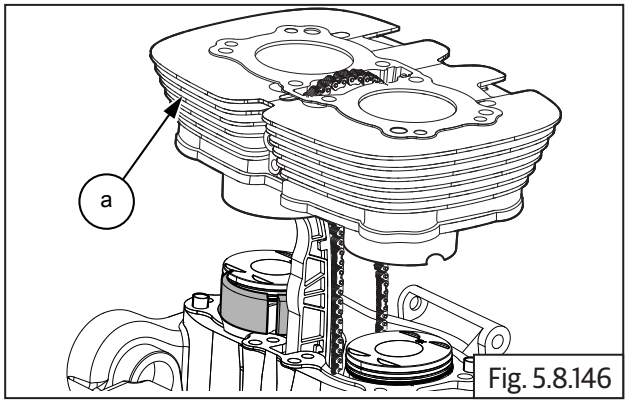

Fig. 5.8.146

- Hold cylinder barrel firmly in suspended position and remove the special tool **(a)** from piston LH.

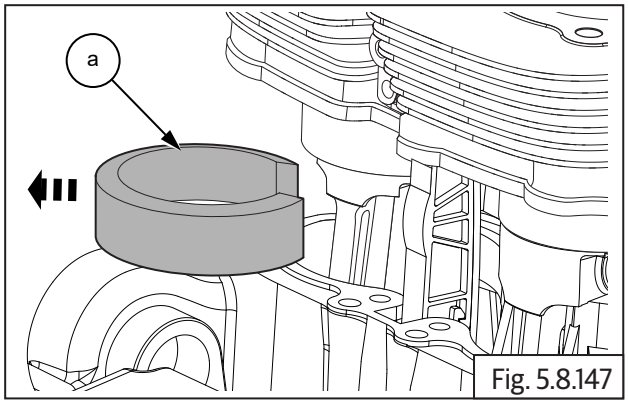

Fig. 5.8.147

SPL	Part No: ST-30296-A
	Part Name: Piton ring compressor

5.8.19. Piston RH in Cylinder Barrel

- Ensure cylinder barrel RH is well lubricated, RH piston is at its top most position, held firmly and straight.
- Locate special tool over piston RH.

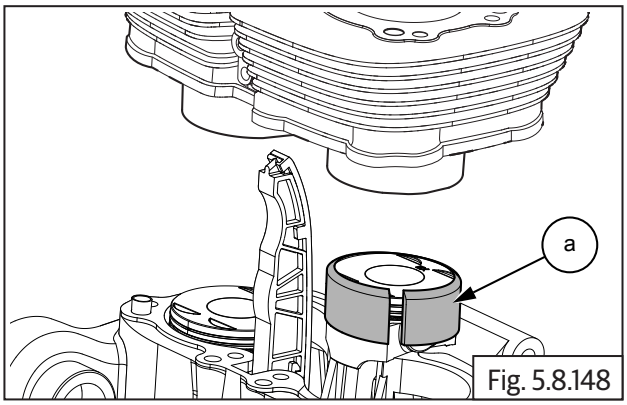

Fig. 5.8.148

SPL	Part No: ST-30296-A
	Part Name: Piston ring compressor

- Gently lower cylinder barrel **(a)** till piston RH is halfway into the cylinder barrel.

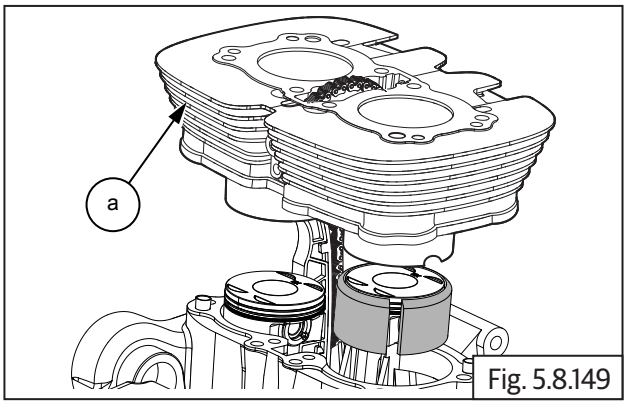

Fig. 5.8.149

- Hold cylinder barrel firmly in suspended position and remove the special tool **(a)** from piston RH.

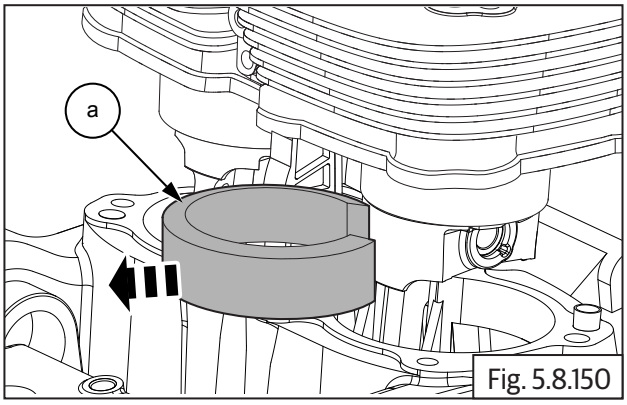

Fig. 5.8.150

SPL	Part No: ST-30296-A
	Part Name: Piston ring compressor

- Gently lower cylinder barrel further, till it is firmly seated on the crankcase.
- Locate 2 Nos. dowel pins **(a)** on cylinder barrel and ensure they are seated properly.

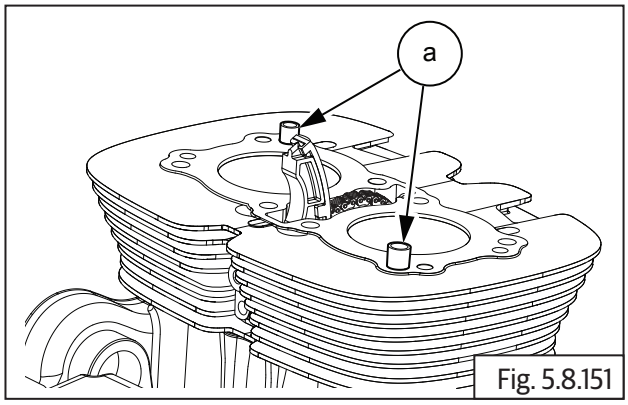

Fig. 5.8.151

5.8.20. Cylinder Head Gasket on Cylinder Barrel

- Ensure the gasket seating surface on cylinder barrel is clean.
- Ensure cam chain is routed through a new cylinder head gasket.
- Locate new head gasket **(a)** on cylinder barrel and ensure it is properly seated on the dowel pins and cylinder barrel.

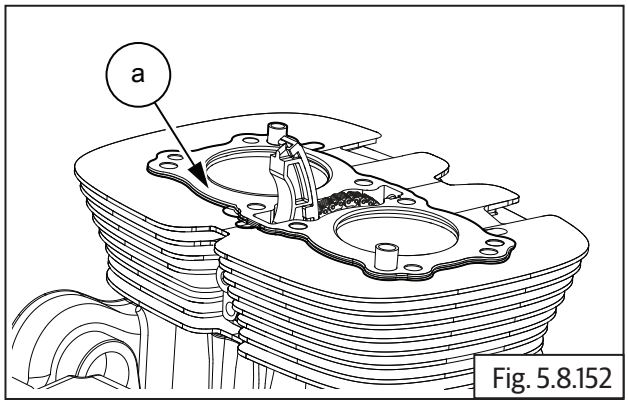

Fig. 5.8.152

5.8.21. Floating Chain Pad

- Hold timing chain **(a)** suitably and insert chain pad **(b)** into cylinder barrel with the chain contact area facing inside.

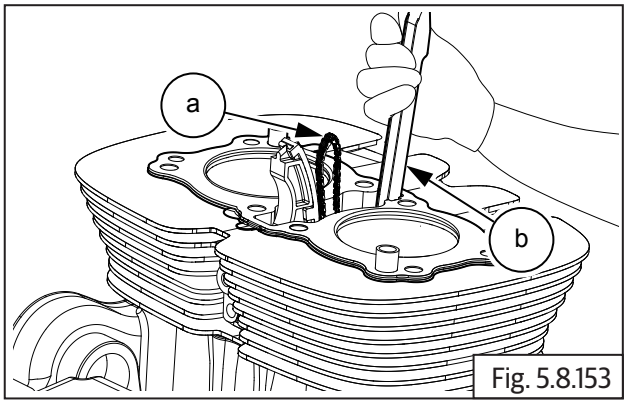

Fig. 5.8.153

⚠ CAUTION

Ensure floating chain pad seating correctly in the crankcase and free radial movement.

Components in Cylinder Head

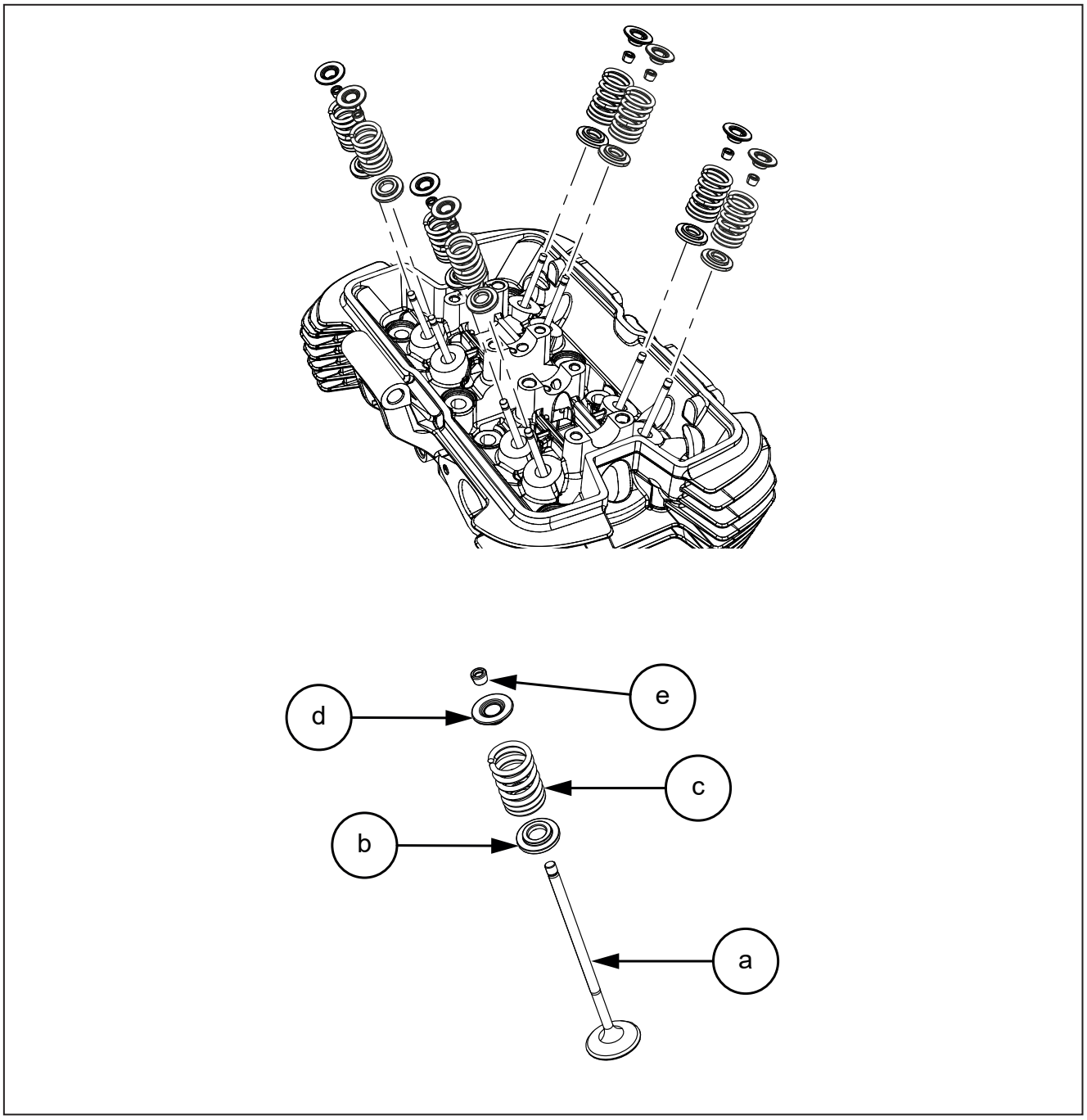

Item No.	Description	Quantity
a	Valve Stem	1
b	Spring Seat	1
c	Valve Spring	1
d	Retainer	1
e	Cotter	1

5.8.22. Components in Cylinder Head

Valves and Springs

- Install 8 Nos. valve stem seals **(b)** on the 8 Nos. valve guides **(a)**.

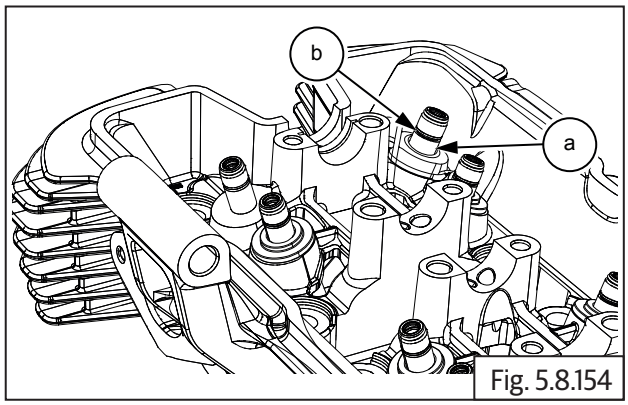

Fig. 5.8.154

- Lubricate and insert the valves **(a)** into the valve guides inside cylinder head **(b)**.

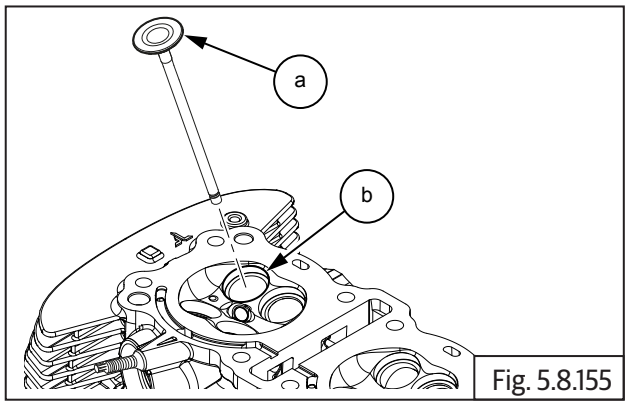

Fig. 5.8.155

- Support the valve inside cylinder head and assemble valve spring seat **(c).** Place the spring **(a)** over valve stem **(b)** in the outer area of the cylinder head.

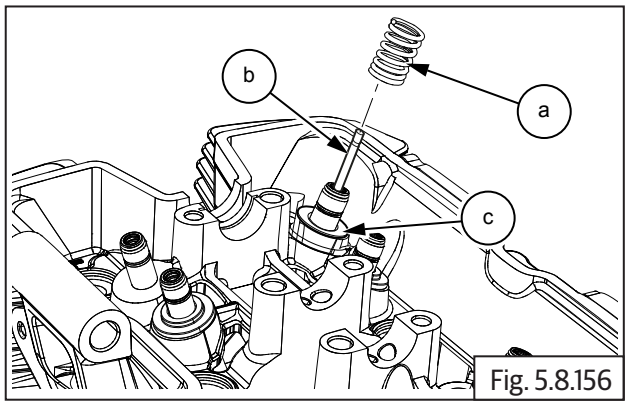

Fig. 5.8.156

- Insert collar **(a)** above valve spring **(b)**.

⚠ CAUTION

Ensure the marked position in spring (a) is facing downwards while assembling.

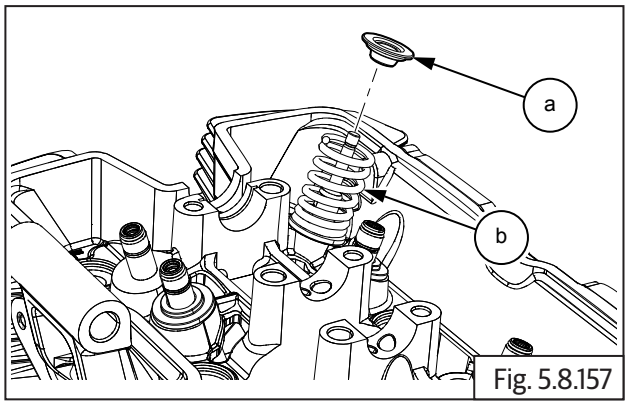

Fig. 5.8.157

- Locate special tool on the valve such that the threaded screw end of the tool is seated centrally on the valve inside the cylinder head and the other end is seated on the valve spring retainer on the outer side of the cylinder head.
- Compress valve spring with special tool **(a)** by "hand tightening" the threaded screw of the special tool gently, till it locks against the valve**.**

⚠ CAUTION

Do not overtighten the special tool as it will damage both the valve seating surface and the special tool.

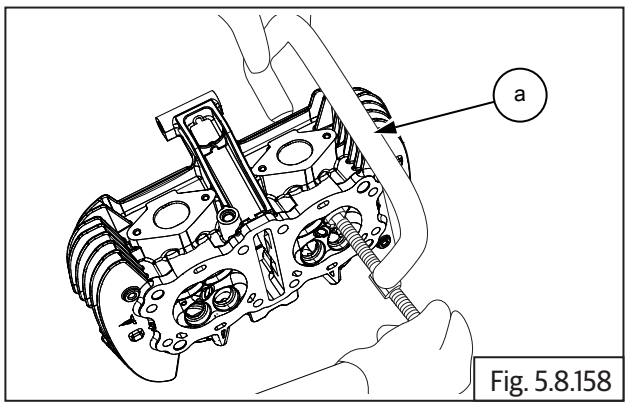

Fig. 5.8.158

SPL 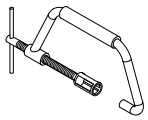	Part No: ST-27528-2
	Part Name: Valve spring compressor

- Locate two split cotters **(a)** on the retainer with their tapered end facing inside and the flat edges seated against the valve stem top portion.

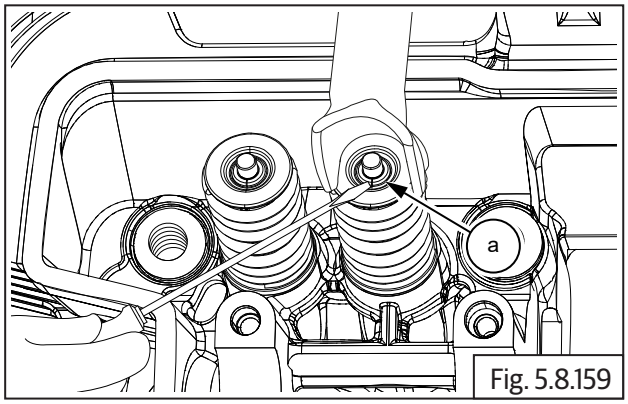

Fig. 5.8.159

SPL 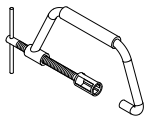	Part No: ST-27528-2
	Part Name: Valve spring compressor

- Gently and slowly release special tool by unscrewing the threaded shaft, duly ensuring the valve cotters are locked in place on the valve stem and the tapered surfaces of the cotters are inside the valve spring retainer.
- Remove special tool **(a)** from the valve.

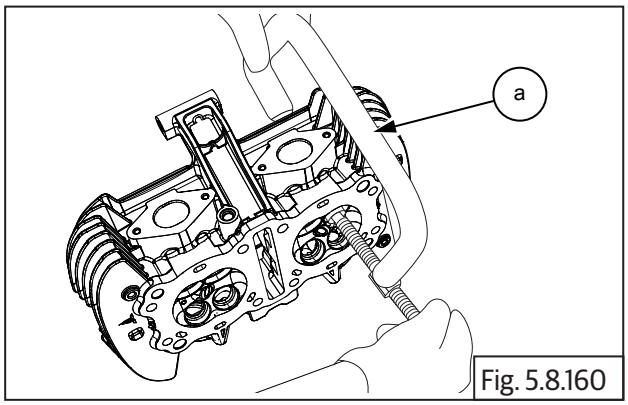

Fig. 5.8.160

- Repeat the above process to install the other seven valves, springs, retainers and cotters on the cylinder head.

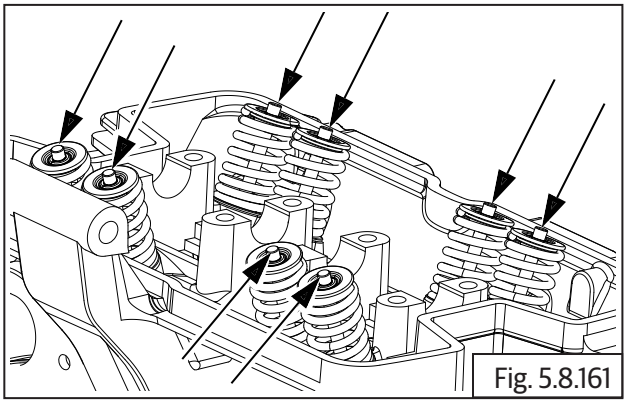
Fig. 5.8.161

5.8.23. Cylinder Head on Cylinder Barrel

Cylinder head assembly on cylinder barrel

- Position cylinder head over the barrel such that the exhaust ports are facing towards the front and inlet ports are towards the rear of the engine.
- Ensure the 2 Nos. dowels **(a)** and cylinder head gasket are located on the cylinder barrel.
- Ensure the cam chain pads are positioned correctly and route the cam chain from the lower side of the cylinder head to the top.
- Support cam chain suitably to prevent it from falling into cylinder head.

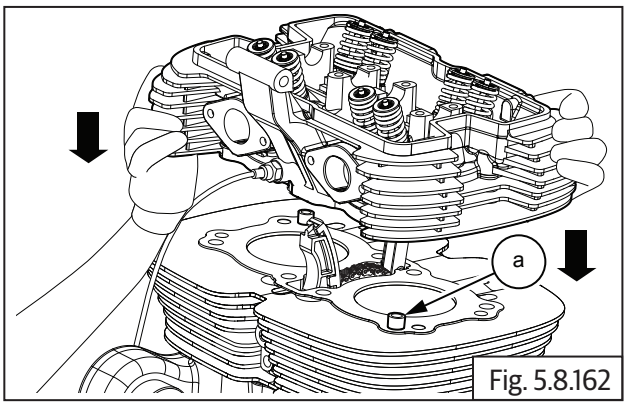

Fig. 5.8.162

⚠ CAUTION

Cylinders bolts and washers are one time ise only. Do not reuse.

- Locate new 8 Nos. Hex flange head bolts **(M10) (a)** along with washers on the cylinder head.

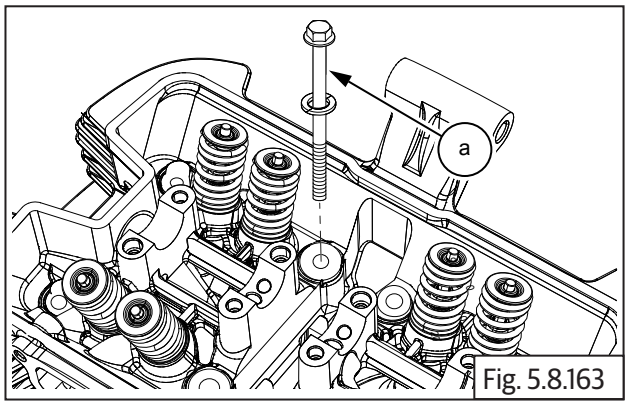

Fig. 5.8.163

	12 mm Socket with Ratchet

- Tighten the cylinder head bolts in a crisscross pattern to the initial 1st torque values FIRST and then to the 2nd torque values as specified below.

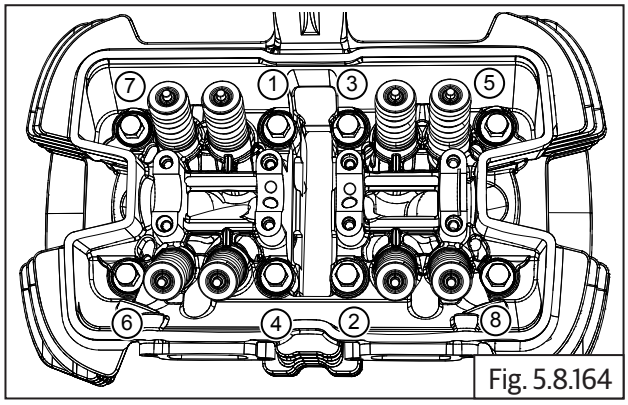

Fig. 5.8.164

- Finally tighten each of the cylinder head bolts using an angular torque wrench, to the specified angular torque value given below and in the same crisscross pattern detailed above.

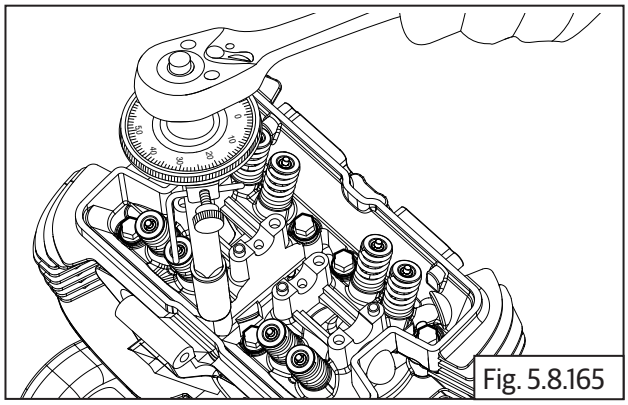
Fig. 5.8.165

	14 mm Socket with Angle wrench
1st Torque	15 N-m/1.5 kgf-m
2nd Torque	35 N-m/3.5 kgf-m
Angular Torque	150° (deg)

⚠ CAUTION

Torque and angle should be as specified. Do not provide over-torque as it will damage the bolts.

5.8.24. Starter Clutch to Magneto Rotor

- Lubricate starter clutch **(d)** and assemble into outer ring **(c)** with the collar seating in the groove in the outer ring.
- Position outer ring on magneto rotor such that the collar of the starter clutch is facing magneto rotor.
- Ensure mounting holes are aligned, insert 6 Nos. Hex socket head screws **(M6) (a)** into magneto rotor **(b)** and tighten outer ring **(c)** to rotor to specified torque.

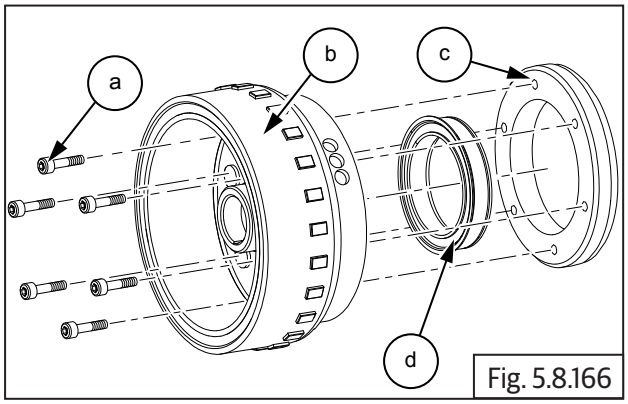

Fig. 5.8.166

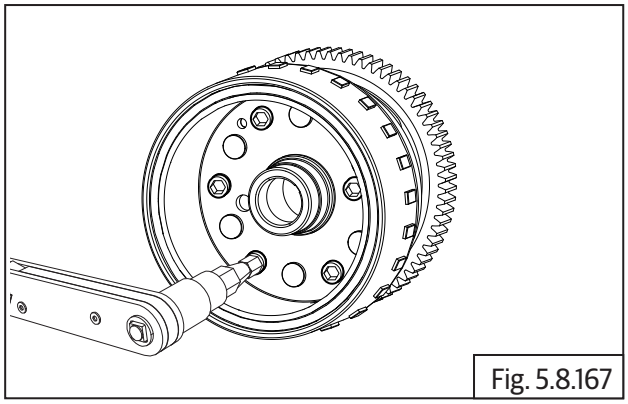

Fig. 5.8.167

	5 mm Allen socket with Torque wrench
Torque	10 N-m/1 kgf-m

NOTE
• *Apply Loctite 243 on the threads of Magneto Rotor bolts* **(a)** *before installing*

5.8.25. Woodruf Key on Crankshaft

- Assemble woodruff key **(a)** on crankshaft and ensure it is facing upwards by rotating crankshaft.

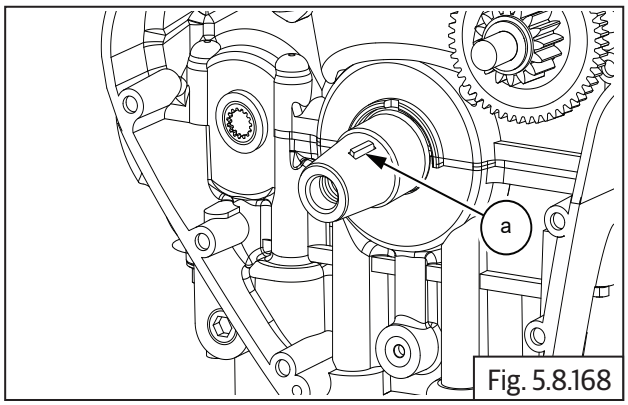

Fig. 5.8.168

5.8.26. Magneto Rotor on Crankcase

- Position gear starter clutch with the collar facing outside.
- Insert gear starter clutch **(a)** into magneto rotor **(b)** and rotate anti-clockwise to lock the gear starter clutch into magneto rotor.

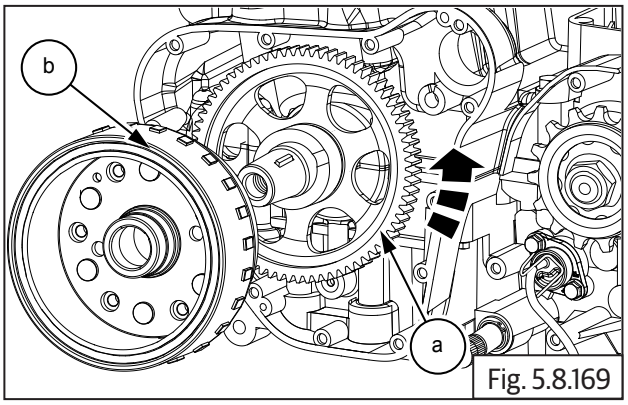

Fig. 5.8.169

- Locate magneto rotor **(a)** on crankshaft duly ensuring the slot in the rotor is positioned correctly on woodruff key.

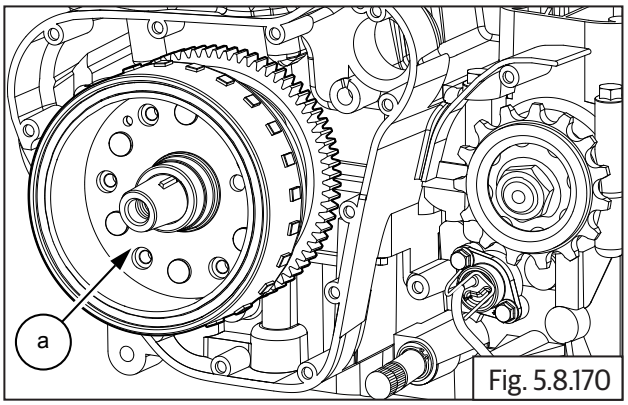

Fig. 5.8.170

- Position idle gear **(a)** against crankcase with smaller gear facing outside and insert idle gear spindle into boss in crankcase.

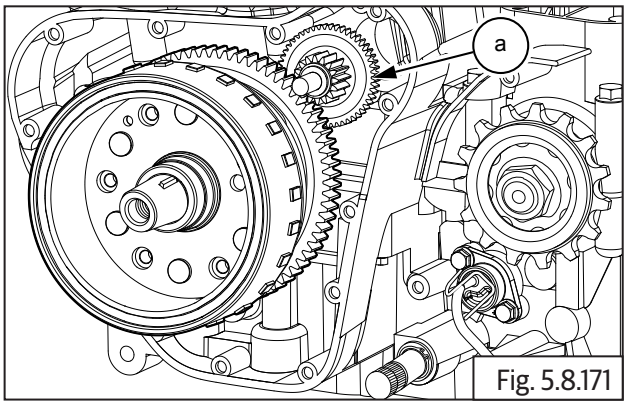

Fig. 5.8.171

- Locate and assemble Hex flange bolt **(M12) (a)** with washer on magneto rotor and tighten bolt just sufficiently.

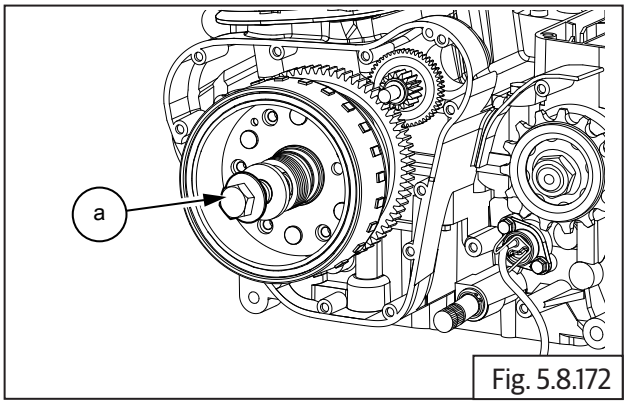

Fig. 5.8.172

- In order to tighten magneto rotor bolt, place special tool **(a)** in crankcase RH between the gears to lock the crankshaft and prevent rotation.
- Ensure LH piston is at TDC on compression stroke before locating special tool inside crankcase RH.

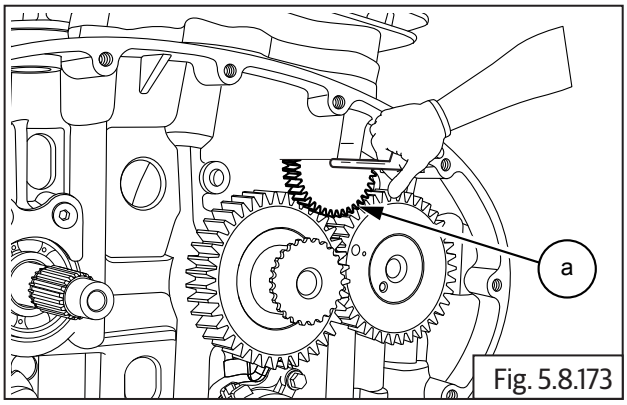

Fig. 5.8.173

SPL	Part No: ST-27533-2
	Part Name: Crank Gears Locking Tool

	17 mm Socket with Ratchet and Torque wrench
Torque	153-157 N-m/15.3 -15.7kgf-m

- Remove special tool from crankcase RH side after tightening magneto rotor bolt.

5.8.27. Camshaft Sub-Assembly

- Check for CAM type, If type 1 is present follow procedure 1, if type 2 is present follow procedure 2.
- Type - 1 (Follow Procedure 1)

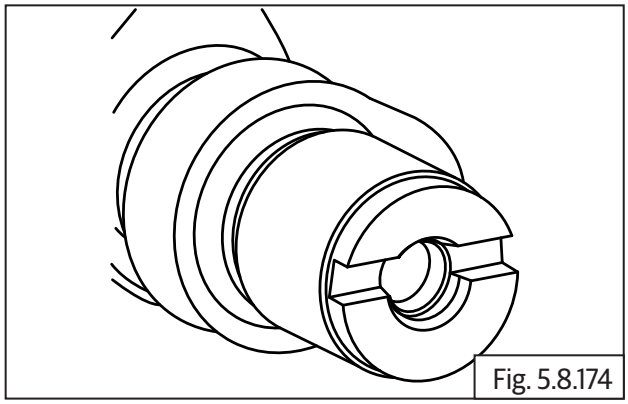
Fig. 5.8.174

- Type - 2 (Follow Procedure 2)

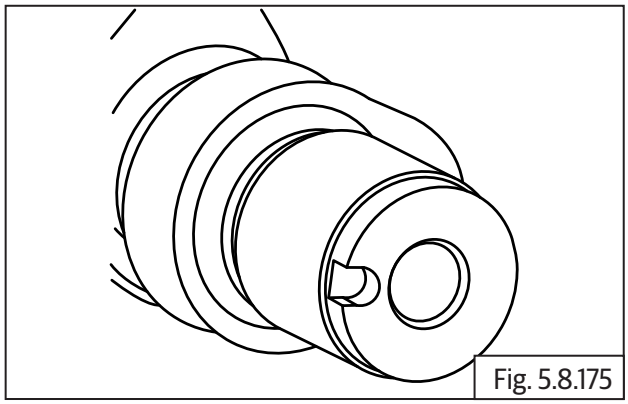
Fig. 5.8.175

Procedure 1

- Hold the timing chain in stretched condition and gently rotate crankshaft anti-clockwise to bring LH piston to TDC.

NOTE
• *Insert special tool in crankcase RH to lock the crankshaft from rotating.*

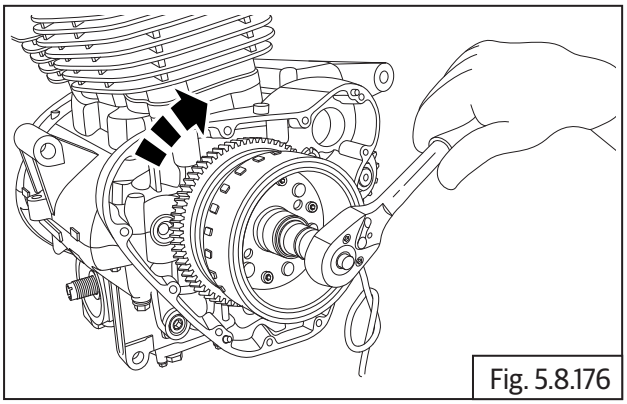

Fig. 5.8.176

	17 mm Socket with Ratchet

⚠ **CAUTION**
Do not rotate crankshaft clockwise.

- Hold sprocket in position with one of the slotted holes facing on top.

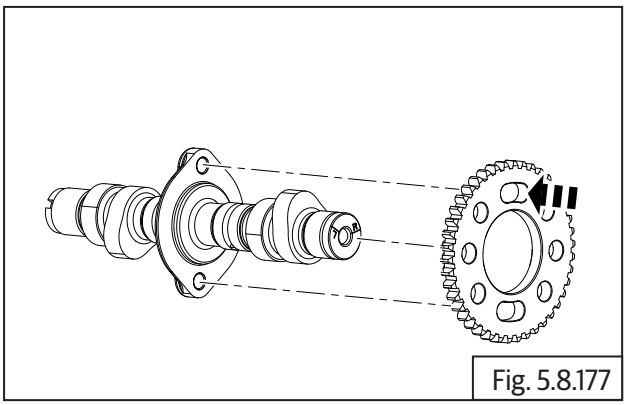

Fig. 5.8.177

- Assemble cam chain **(a)** on sprocket and locate camshaft **(b)** into sprocket from the RH side.
- Locate and install C washer **(c)** on the cylinder head.

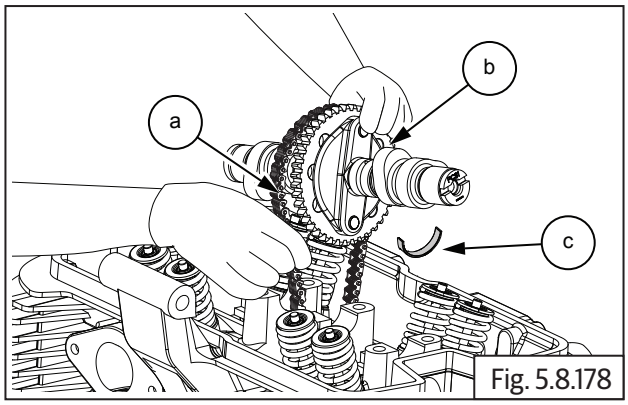

Fig. 5.8.178

- Ensure reference mark "L" in the camshaft is aligned to the cylinder head on LH side.

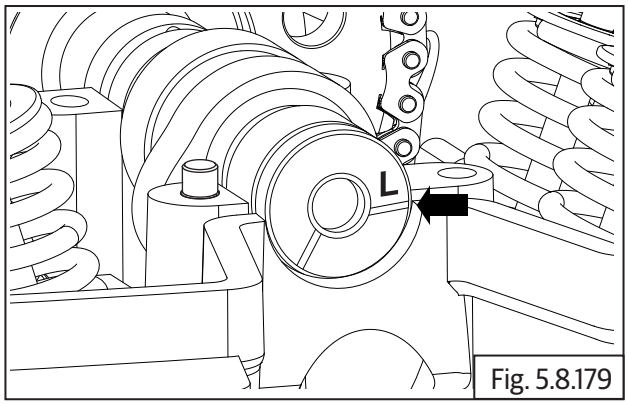

Fig. 5.8.179

- Locate timing chain sprocket on camshaft with its mounting slot centralised to the threads in the camshaft.
- Align Cam TDC plate behind camshaft in locked condition**.**

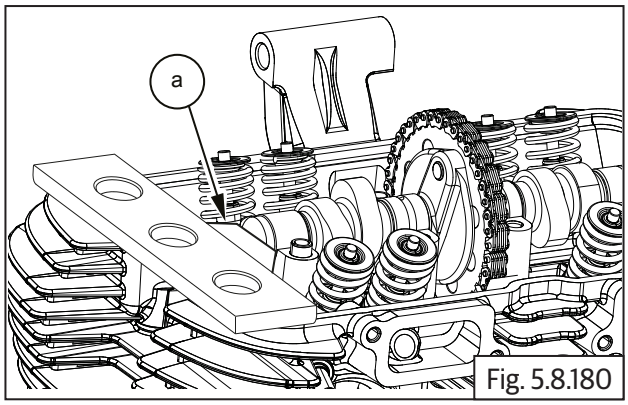

Fig. 5.8.180

SPL	Part No: ST-30260-A
	Part Name: CAM TDC Aligning Plate (OLD)

- Align Cam TDC plate behind camshaft in locked condition**.**

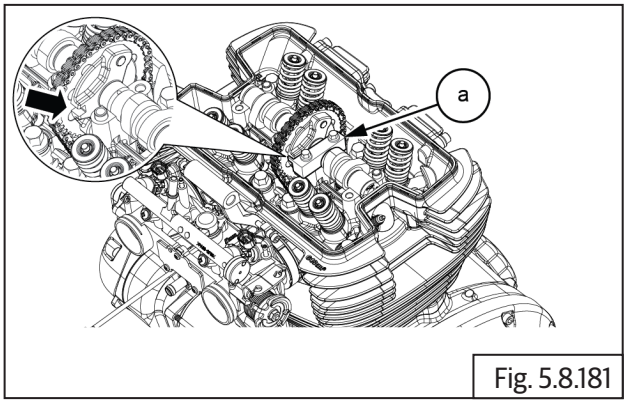

Fig. 5.8.181

SPL	Part No: ST-30937-A
ST30937/A	Part Name: CAM TDC Aligning Plate (NEW)

- Locate and tighten Hex head bolt **(M8) (a)** sufficiently on timing chain sprocket. **Do not TIGHTEN FULLY.**

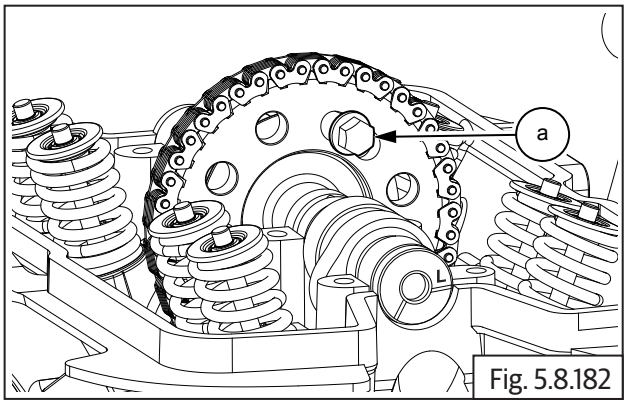

Fig. 5.8.182

	12 mm Socket with Torque wrench

- Remove the special tool from the camshaft on RH side.

- Rotate magneto **(a)** till another slotted hole on cam chain sprocket is at top most position. Ensure reference mark "R" aligned to the cylinder head.

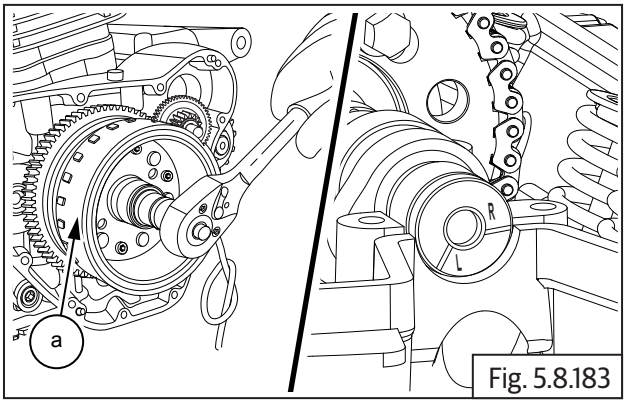

Fig. 5.8.183

	17 mm Socket with Ratchet

- Tighten Hex head bolt **(M8) (a)** to specified torque.

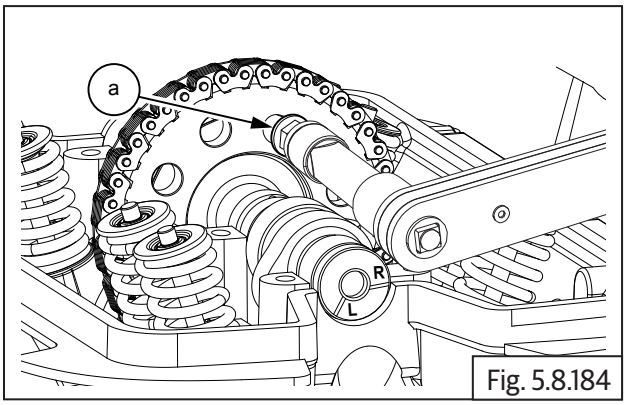

Fig. 5.8.184

	12 mm Socket with Torque wrench
Torque	33-35 N-m/3.3-3.5 kgf-m

- Remove the special tool from cylinder head on RH side.

- Rotate the magneto **(a)** anti-clockwise till the first bolt is visible at top most position on cam side sprocket.

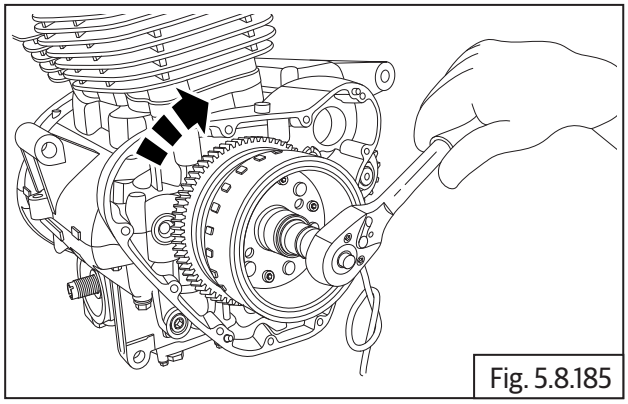

Fig. 5.8.185

- Ensure reference mark "L" in the camshaft is aligned to the cylinder head on LH side.

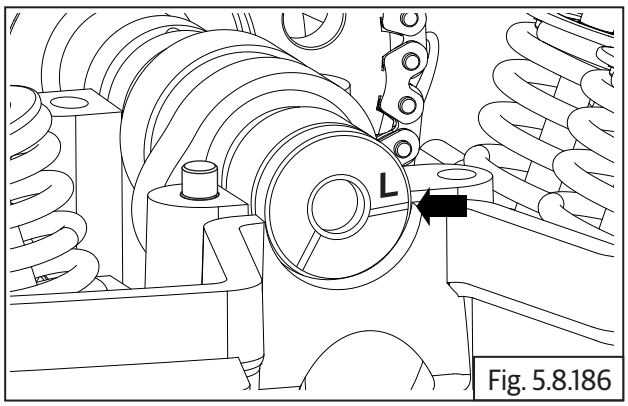

Fig. 5.8.186

- Tighten Hex head bolt **(M8) (a)** to specified torque.

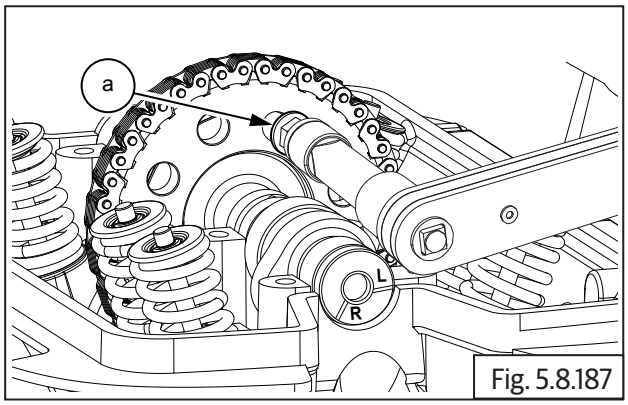

Fig. 5.8.187

	12 mm Socket with Torque wrench
Torque	33-35 N-m/3.3-3.5 kgf-m

Procedure 2

- Hold the timing chain in stretched condition and gently rotate crankshaft anti-clockwise to bring LH piston to TDC.

NOTE
• *Insert special tool in crankcase RH to lock the crankshaft from rotating.*

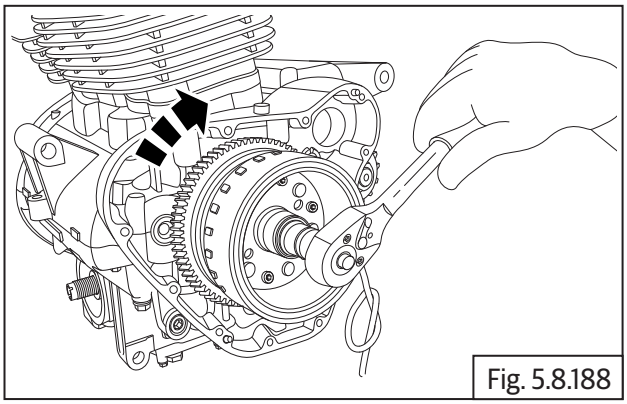

Fig. 5.8.188

	17 mm Socket with Ratchet

⚠ **CAUTION**
Do not rotate crankshaft clockwise.

- Hold sprocket in position with one of the slotted holes facing on top.

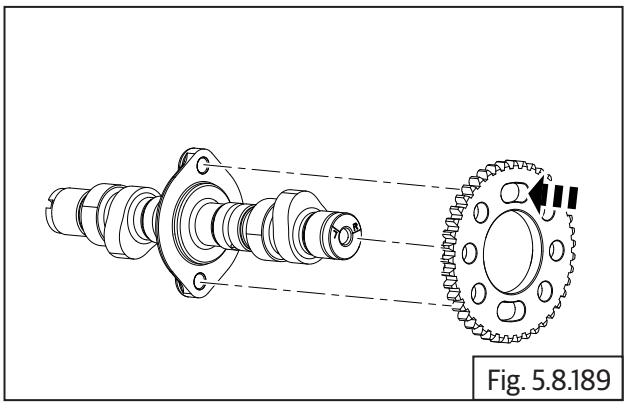

Fig. 5.8.189

- Assemble cam chain **(a)** on sprocket and locate camshaft **(b)** into sprocket from the RH side.

- Locate and install C washer **(c)** on the cylinder head.

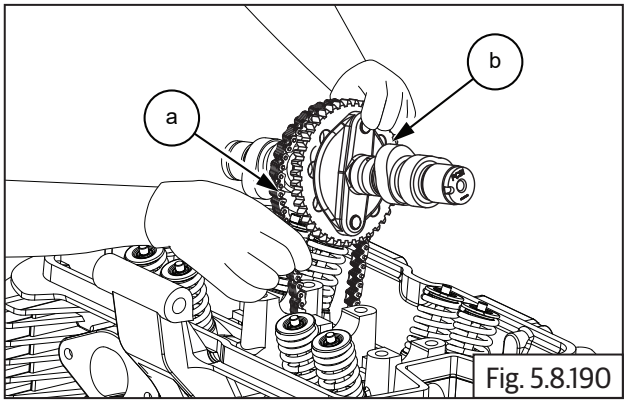

Fig. 5.8.190

- Ensure reference mark "L" in the camshaft is aligned to the cylinder head on LH side.

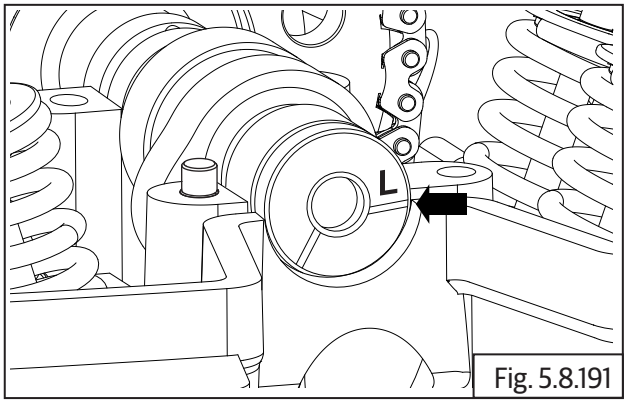

Fig. 5.8.191

- Locate timing chain sprocket on camshaft with its mounting slot centralised to the threads in the camshaft.
- Align special tool **(a)** and tighten it with rocker carrier bolts **(b)**.

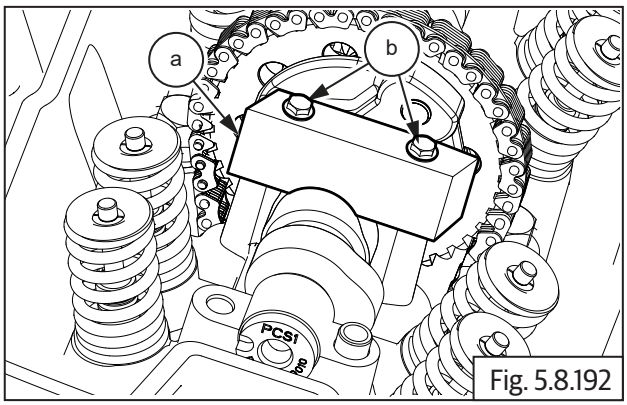

Fig. 5.8.192

- Locate and tighten Hex head bolt **(M8) (a)** sufficiently on timing chain sprocket. **Do not TIGHTEN FULLY.**

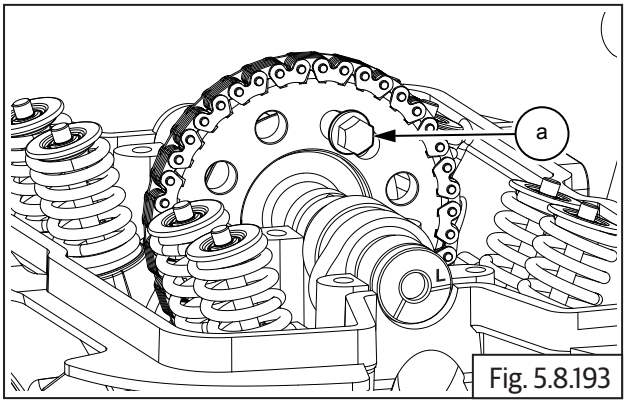

Fig. 5.8.193

	12 mm Socket with Torque wrench

- Remove the special tool from the camshaft on RH side.
- Rotate magneto **(a)** till another slotted hole on cam chain sprocket is at top most position. Ensure reference mark "R" aligned to the cylinder head.

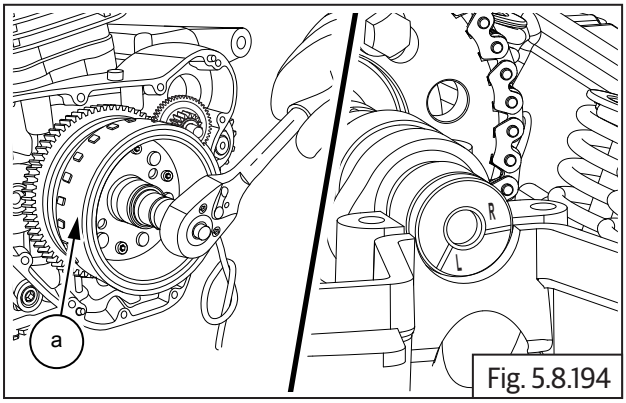

Fig. 5.8.194

	17 mm Socket with Ratchet

- Tighten Hex head bolt **(M8) (a)** to specified torque.

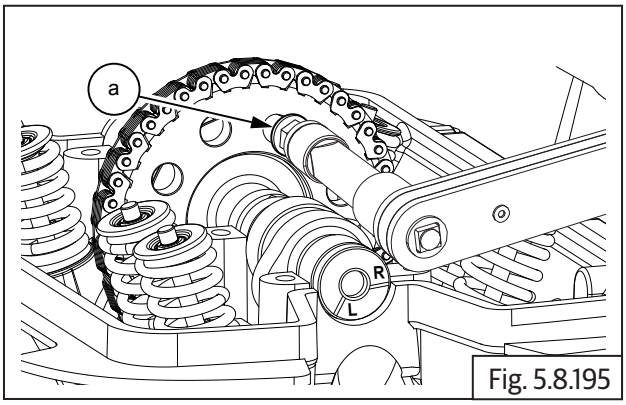

Fig. 5.8.195

	12 mm Socket with Torque wrench
Torque	33-35 N-m/3.3-3.5 kgf-m

- Remove the special tool from cylinder head on RH side.
- Rotate the magneto **(a)** anti-clockwise till the first bolt is visible at top most position on cam side sprocket.

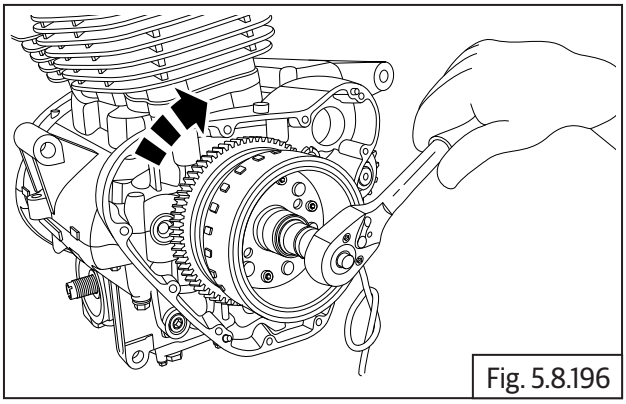
Fig. 5.8.196

- Ensure reference mark "L" in the camshaft is aligned to the cylinder head on LH side.

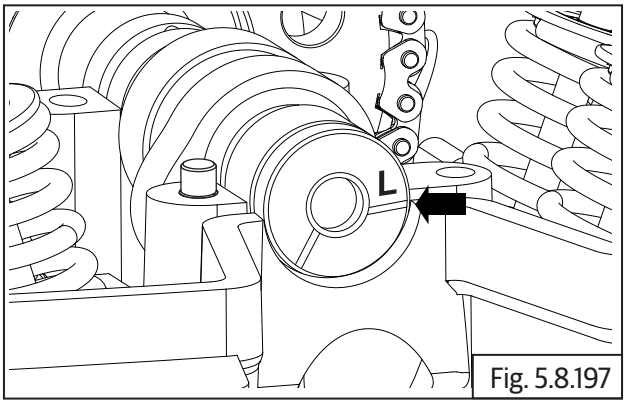

Fig. 5.8.197

- Tighten Hex head bolt **(M8) (a)** to specified torque.

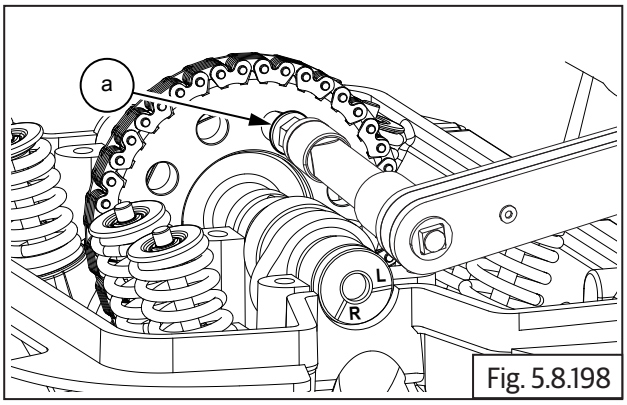

Fig. 5.8.198

	12 mm Socket with Torque wrench
Torque	33-35 N-m/3.3-3.5 kgf-m

5.8.28. Timing Chain Tensioner

- Ensure center bolt is removed from timing chain tensioner.

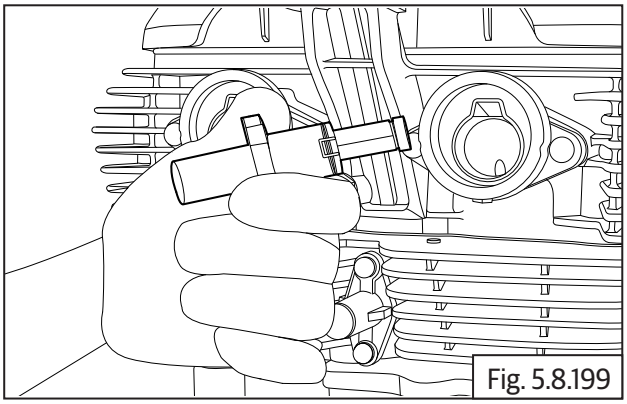
Fig. 5.8.199

- Assemble new gasket on chain tensioner adjuster **(a)**. Ensure the foot is fully retracted into chain tensioner and locate chain tensioner adjuster in cylinder barrel such that the longer side of the foot is facing towards cylinder barrel RH.

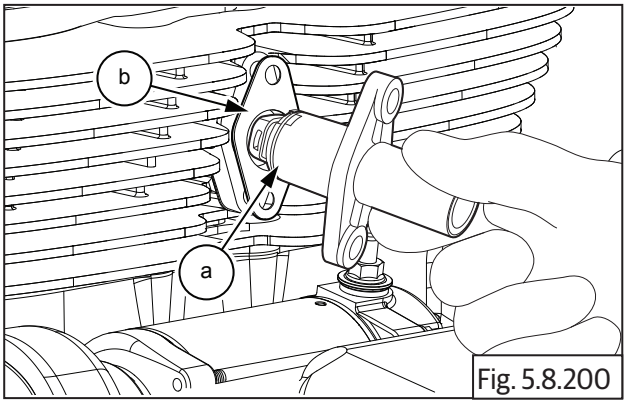

Fig. 5.8.200

- Assemble 2 Nos. Hex flange head bolt **(M6) (a)** on chain tensioner adjuster and tighten to specified torque.

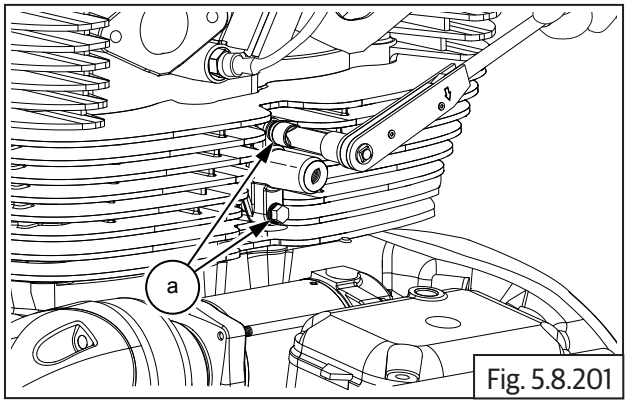

Fig. 5.8.201

	10 mm Socket with Torque wrench
Torque	10-12 N-m/1.0-1.2 kgf-m

.Locate new O-ring **(b)** and, assemble Hex flange head bolt **(M6) (a)** on chain tensioner adjuster and tighten fully to specified torque.

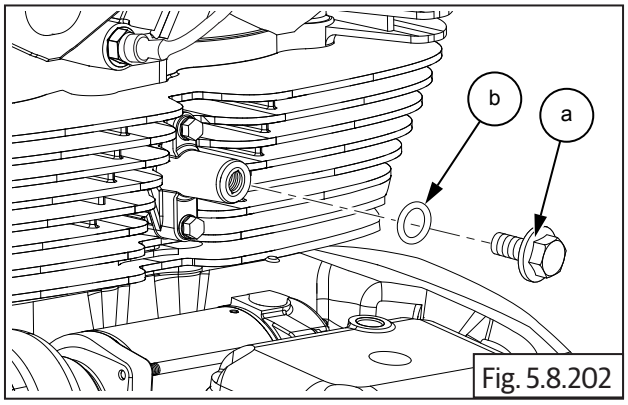

Fig. 5.8.202

	10 mm Socket with Ratchet and Torque wrench
Torque	4-5 N-m/0.4-0.5 kgf-m

5.8.29. Rocker Arms in Carriers LH and RH

Exhaust rocker arm in carrier "L"

- Place the carrier **(a)** on a work table with the mark "L" facing upwards.

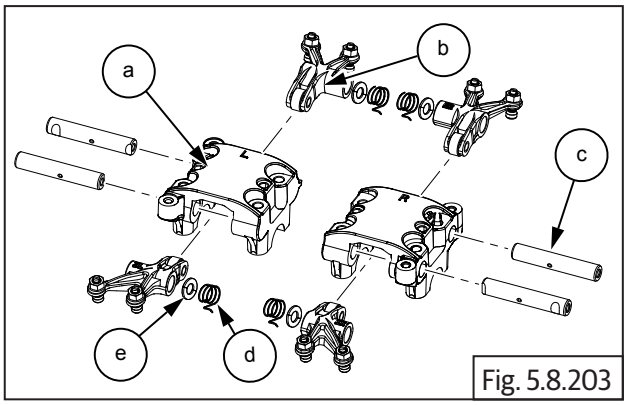

Fig. 5.8.203

- Gently depress the spring **(a)** and install into rocker carrierrs **(b)**.

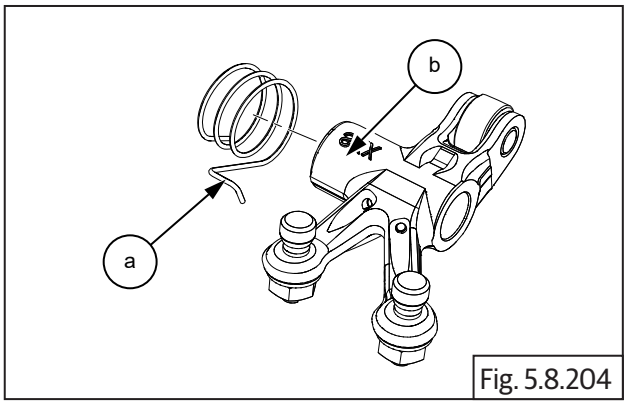

Fig. 5.8.204

- Locate rocker arm **(b)** with the marking "EL" into carrier "L" duly ensuring the following.
  - The roller of the rocker arm is inserted from the side marked "L".
  - The tappet adjustment screws are facing upwards.
  - Ensure the holes are aligned and insert spindle with its small chamfer side in the carrier.
  - Ensure cut away in spindle is correctly aligned to the carrier mounting hole.
  - Align and insert the spindle **(c)** into rocker carrier and rocker arm.

Intake rocker arm in carrier "L"

- Locate rocker arm with the marking "IL" into carrier "L" duly ensuring the following.
  - The roller of the rocker arm is inserted from the OPPOSITE side marked "L".
  - The tappet adjustment screws are facing upwards.
  - Ensure the holes are aligned and insert spindle with its small chamfer side in the carrier.
  - Ensure cut away in spindle is correctly aligned to the carrier mounting hole.
  - Align and insert the spindle **(c)** into rocker carrier and rocker arm.
- Repeat the above process to assemble rocker arm "ER" and "IR" into carrier "R".

5.8.30. Rocker Carrier on Cylinder Head LH

NOTE
• *Ensure "L" mark on camshaft is aligned to cylinder head.*

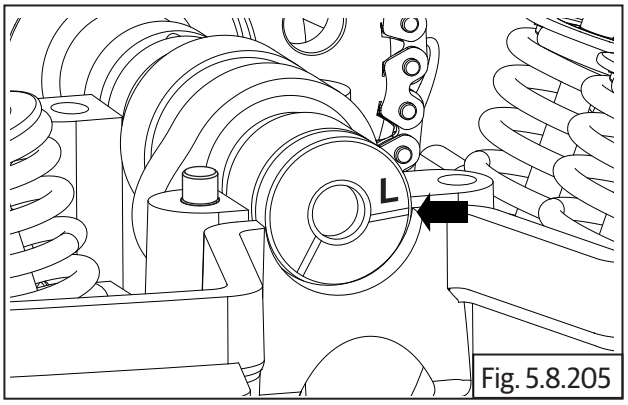

Fig. 5.8.205

- Insert special tool **(a)** in crankcase RH to lock the crankshaft and prevent rotation.

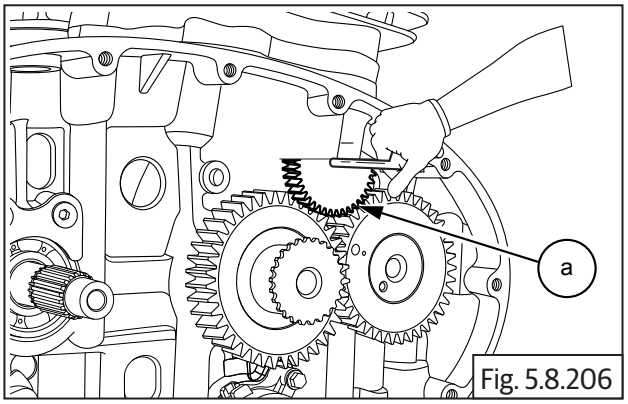

Fig. 5.8.206

SPL	Part No: ST-27533-2
	Part Name: Crank Gears Locking Tool

- Ensure the tappet adjuster locknuts and adjusters are fully loosened on the intake and exhaust rocker arms.
- Assemble rocker carrier LH **(a)** on cylinder head LH such that tappet adjusters are above the inlet and exhaust valves.
- Assemble 4 Nos. Hex flange head bolts **(M6) (b)** on rocker carrier and tighten in a crisscross pattern to torque specified torque.

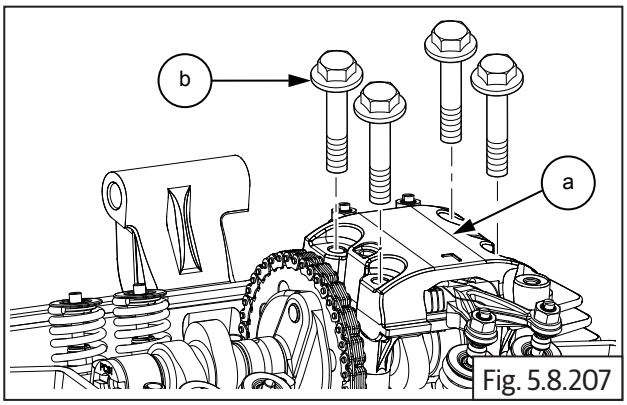

Fig. 5.8.207

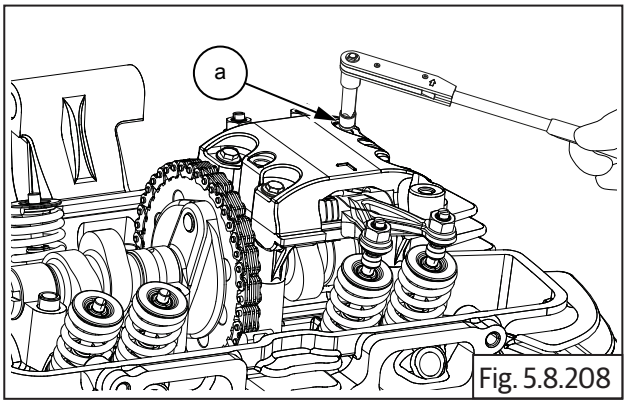

Fig. 5.8.208

	10 mm Socket with Torque wrench
Torque	10-12 N-m/1.0-1.2 kg-m

- Remove special tool from crankcase RH side.

5.8.31. Rocker Carrier on Cylinder Head RH

- Rotate magneto **(a)** anti-clockwise and ensure reference mark "R" is aligned with cylinder head.

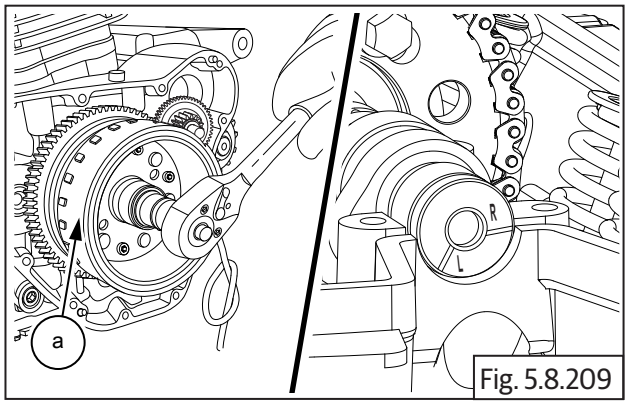

Fig. 5.8.209

	17 mm Socket with Ratchet

- Ensure the tappet adjuster locknuts and adjusters are fully loosened on the intake and exhaust rocker arms.
- Assemble rocker carrier RH **(a)** on cylinder head RH such that the tappet adjusters are above the inlet and exhaust valves.
- Assemble 4 Nos. Hex flange head bolts **(M6) (b)** on rocker carrier **(a)** and tighten in a crisscross pattern to specified torque.

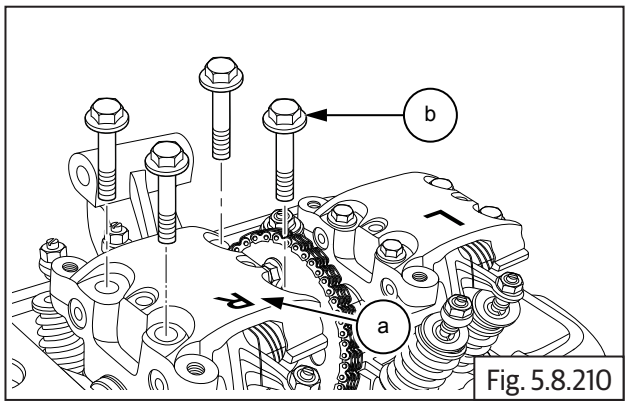

Fig. 5.8.210

- Tighten the bolts **(a)** to specified torque.

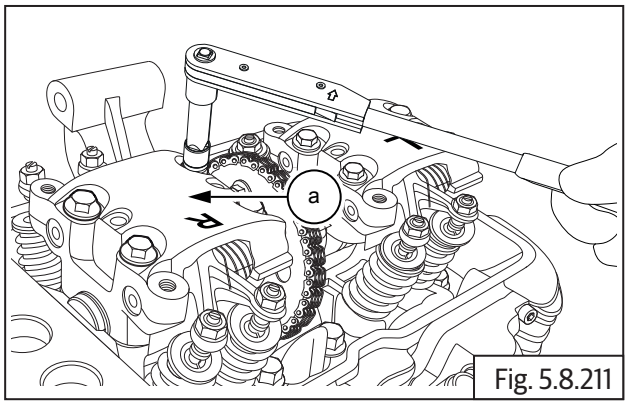

Fig. 5.8.211

	10 mm Socket with Torque wrench
Torque	12 N-m/1.2 kgf-m

- Ensure the special tools are removed from position after tightening bolts.

5.8.32. Tappet Clearance Adjustment

Tappet Clearance Cylinder head LH

- *Ensure "L" mark on camshaft* **(a)** *is aligned to cylinder head.*

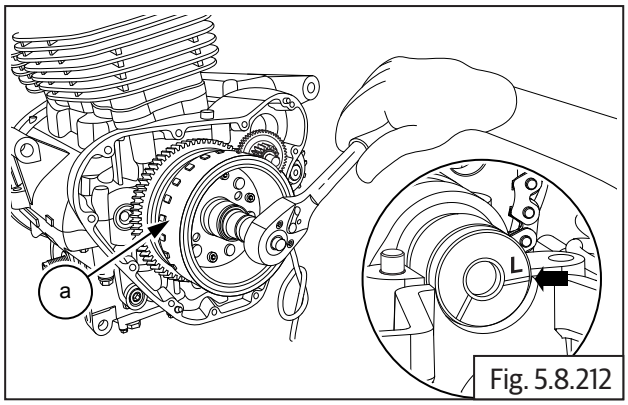

Fig. 5.8.212

- Loosen tappet adjuster screw locknut **(a)** with special tool and ensure locknut is sufficiently loose.

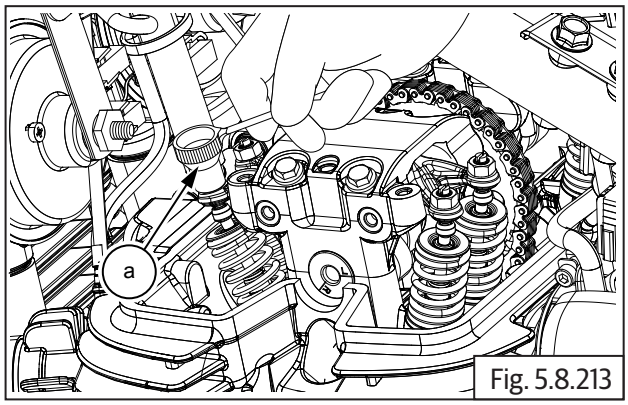

Fig. 5.8.213

- Insert a screw driver into the tappet adjusting tool **(b)** and ensure it is seated correctly on the adjuster screw **(a)**.

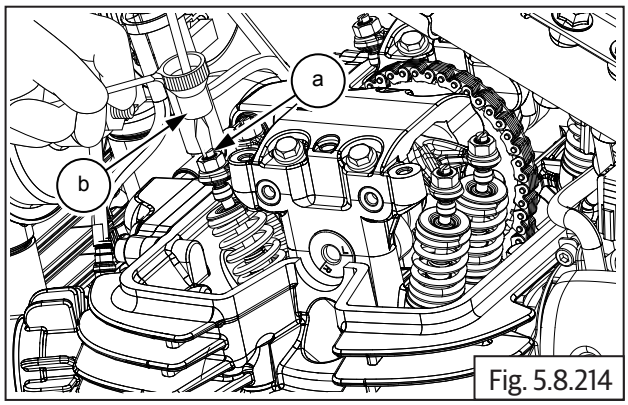

Fig. 5.8.214

- Locate feeler strip **(a)** between adjuster screw and valve stem as per thickness mentioned below.

For intake	0.08 mm
For exhaust	0.18 mm

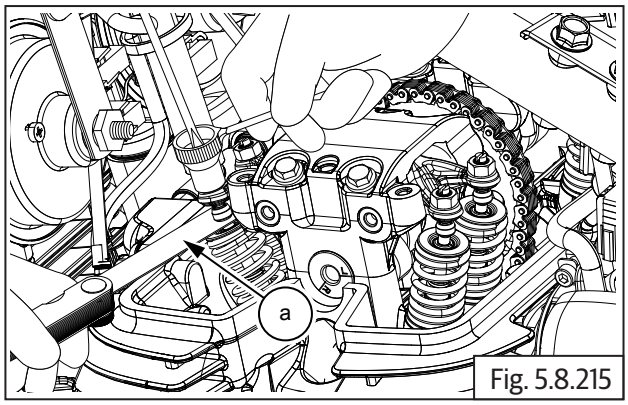

Fig. 5.8.215

- Gently pull out feeler strip **(a)** and check if it comes out freely OR with resistance.

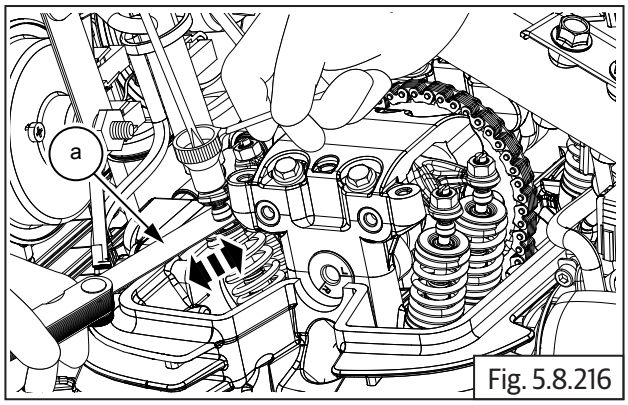

Fig. 5.8.216

- In case feeler strip comes out freely the adjuster screw has to be tightened.
- In case feeler strip movement is hard, the adjuster screw must be loosened.
- Tighten/loosen adjuster screw using screw driver, while simultaneously checking correct and smooth movement of feeler strip.

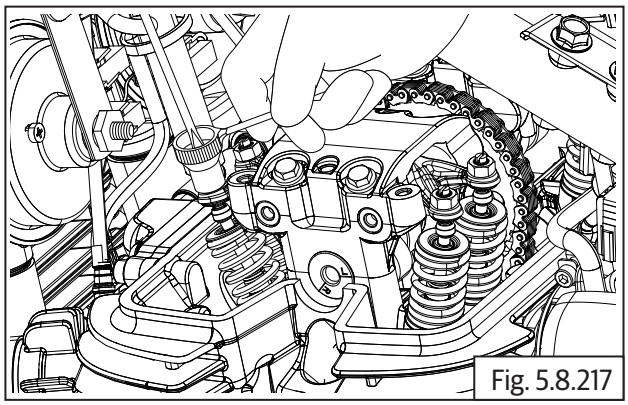
Fig. 5.8.217

	10 mm Socket with Torque wrench
Torque	10-12 N-m/1.0-1.2 kgf-m

- After setting correct gap, remove feeler strip, hold screw driver firmly such that the setting **DOES NOT** gets distrubed and gently lock the lock nut against rocker arm using special tool **(a)**.

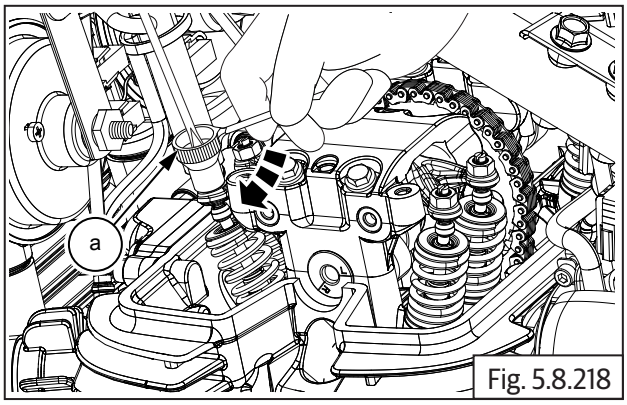

Fig. 5.8.218

NOTE
• *Reconfirm correctness of tappet clearances before final locking of lock nut .*

⚠ **CAUTION**
Do not adjust tappets with less OR no clearance as it will result in poor compression, valve burn-out and wear-out of tappet adjuster foot. **Do not adjust tappet with high clearance as will result in noise and insufficient opening of the valves.**

- Remove screw driver and both special tools after adjustment is complete.

Tappet Clearance Cylinder Head RH

NOTE
• *Ensure "R" mark on camshaft is aligned to cylinder head.*

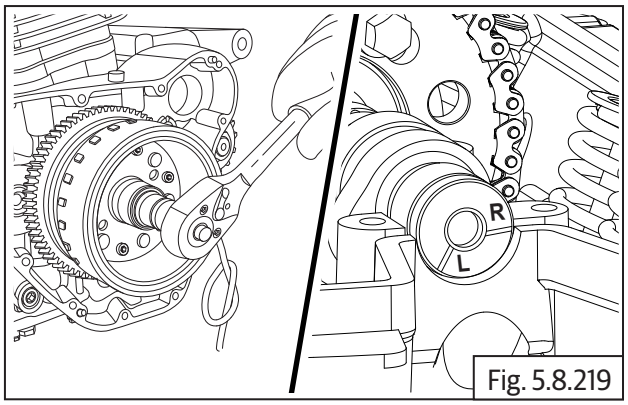

Fig. 5.8.219

- Adjust the RH tappets clearances as mentioned in tappets adjustment LH.

5.8.33. Cover Cylinder Head

NOTE
• *Ensure the cover-cylinder head seating surface and gasket seating groove are clean.* • *Ensure sealant is applied in head gasket groove before assembly.*

- Locate new rubber gasket in the groove in cylinder head and ensure it is properly and evenly seated .

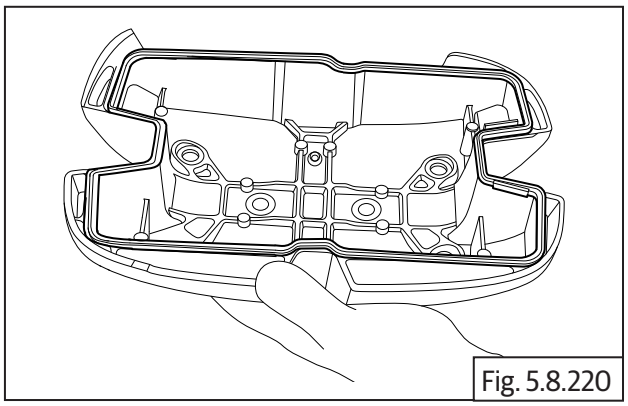
Fig. 5.8.220

- Locate cylinder head cover **(a)** on cylinder head with its narrow deep slot facing towards front of the engine.

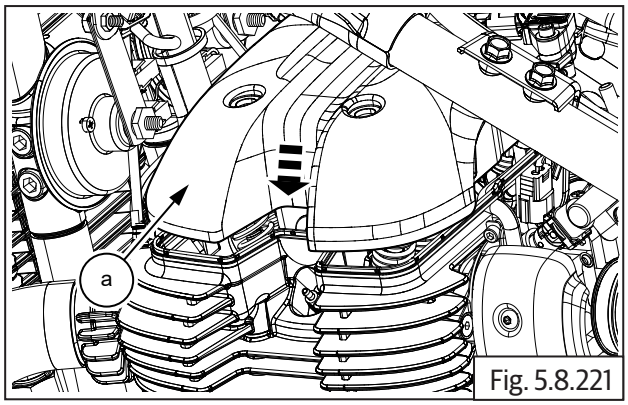

Fig. 5.8.221

- Assemble new seals washers **(a)** on the 4 Nos. Hex flange head bolts **(M6) (b)**.
- Locate the bolts on cylinder head cover **(c)** and tighten bolts to cylinder head evenly to specified torque.

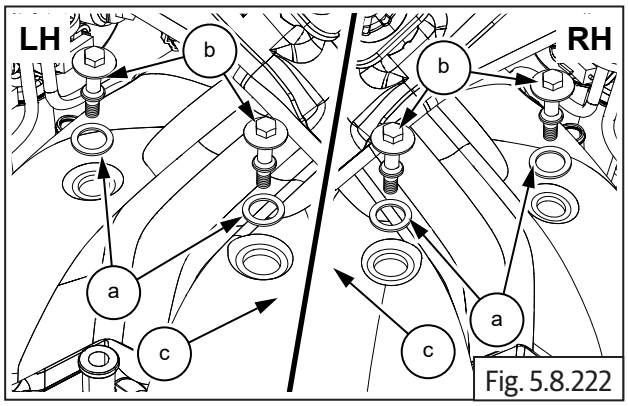

Fig. 5.8.222

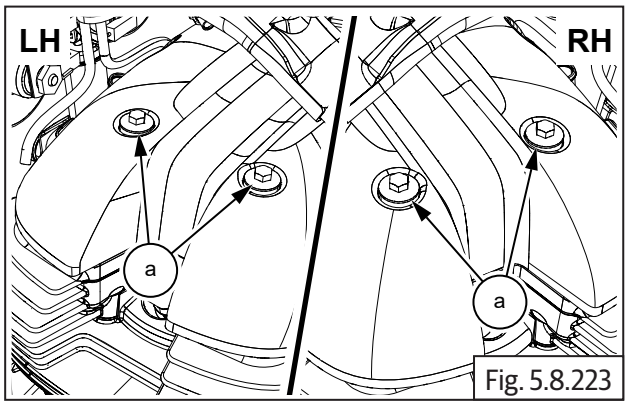

Fig. 5.8.223

	8 mm Socket with Torque wrench
Torque	10-12 N-m/1.0-1.2 kgf-m

5.8.34. Reed Valves

NOTE
• *The reed valve has a rounded edge in one of the corners this should be aligned to the rounded edge in the housing during assembly.*

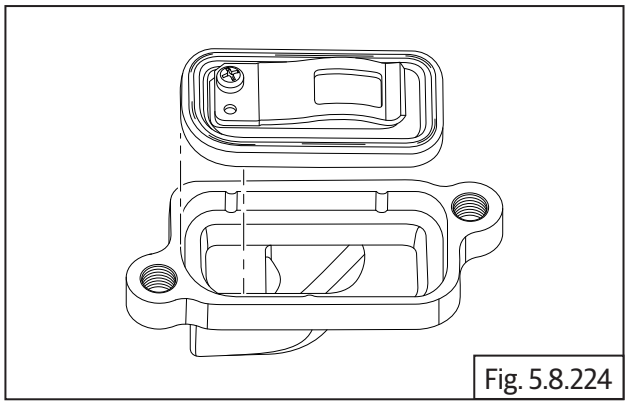
Fig. 5.8.224

- Loacte reed valves LH & RH **(a)** in the housings duly ensuring it is seated properly and correctly.
- Assemble new "O" rings **(b)** on either ends of the connection tube and locate the reed valves housings LH & RH on the connection tube duly ensuring the connection tube is fully inserted into the housings.

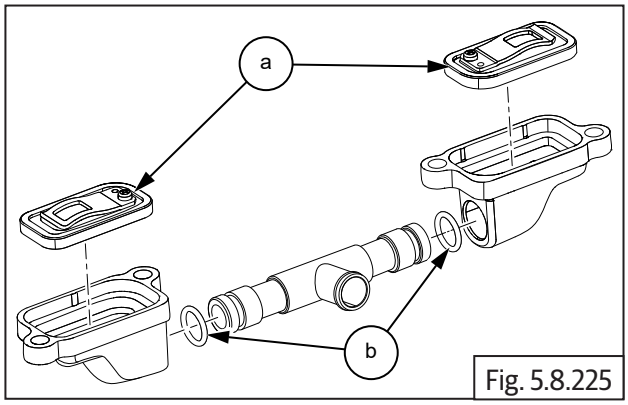

Fig. 5.8.225

- Locate reed valves on cylinder head front side with the hose **(a)** pointing upwards and ensure the mounting holes are aligned.

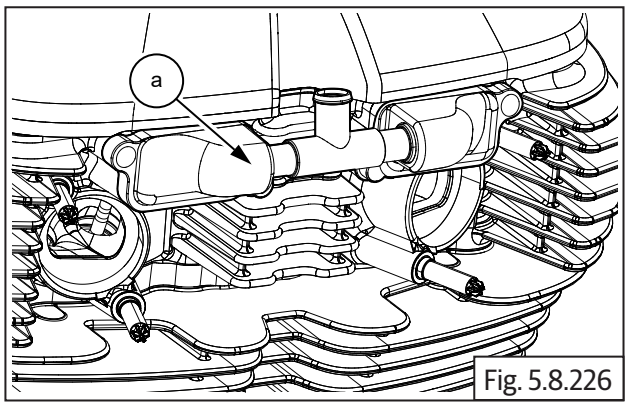

Fig. 5.8.226

- Locate 2 Nos. each Hex socket head bolts **(M6) (a)** on the LH and RH reed valves and tighten evenly to specified torque.

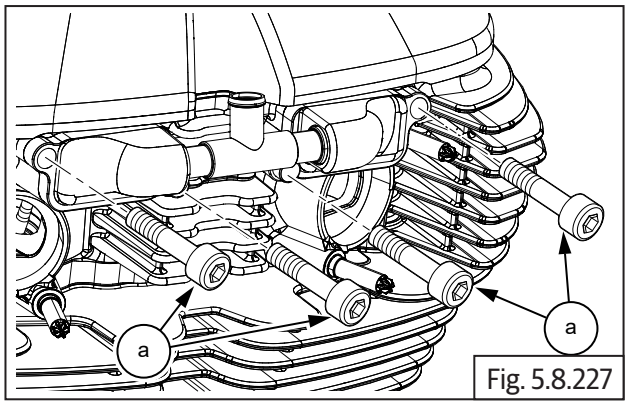

Fig. 5.8.227

	5 mm Allen socket and Torque wrench
Torque	10-12 N-m/1.0-1.2 kgf-m

5.8.35. Inlet Manifold Rubber Flanges LH & RH

- Locate 2 Nos. inlet manifold rubber flanges **(a)** on the cylinder heads, duly ensuring the "cut away" in the manifolds are matching with the "cut away" in the cylinder head.

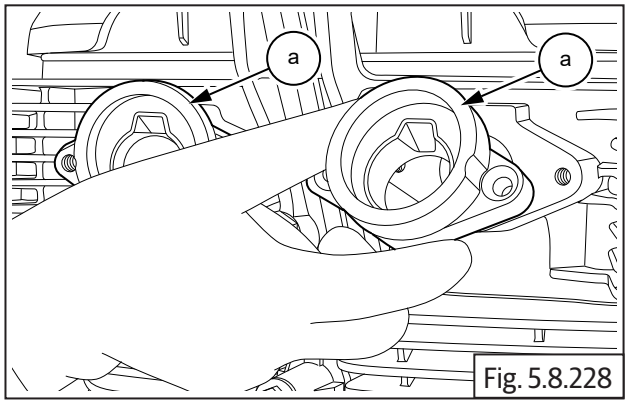

Fig. 5.8.228

- Locate and tighten 2 Nos. each countersunk head bolts **(M5) (a)** on the manifold rubber flanges on inlet manifold LH & RH.

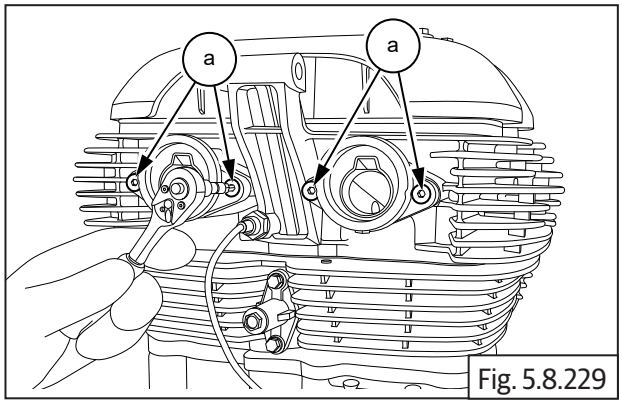

Fig. 5.8.229

	4 mm Allen socket with Ratchet and Torque wrench
Torque	2 N-m/0.2 kgf-m

5.8.36. Star Index

- Locate and tighten 2 Nos. Hex head bolts **(M6) (a)** on selector fork shaft stopper plate.

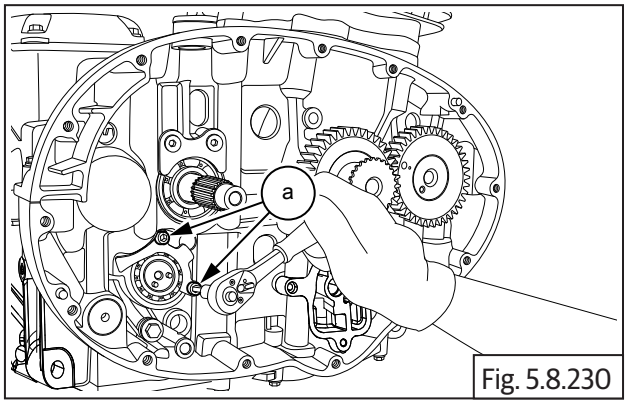

Fig. 5.8.230

	5 mm Allen socket with Torque wrench
Torque	10-12 N-m/1.0-1.2 kgf-m

- Locate and tighten Hex socket head stepped bolt **(M6) (a)** on gear shift cam drum.

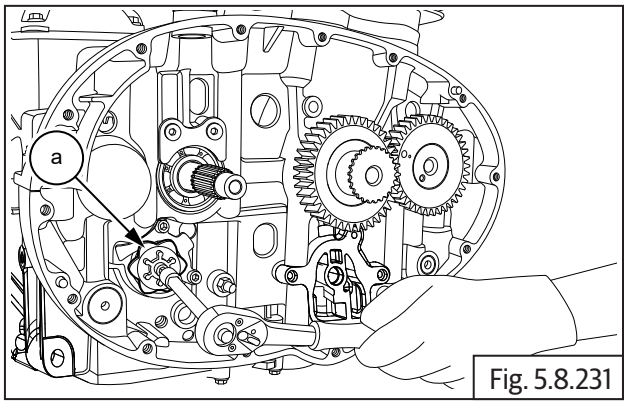

Fig. 5.8.231

	5 mm Allen socket with Ratchet

5.8.37. Star Index Stopper

- Locate spring and stopper plate support **(a)** on RH lower crankcase and assemble Hex head flange bolt **(M6) (b)**.

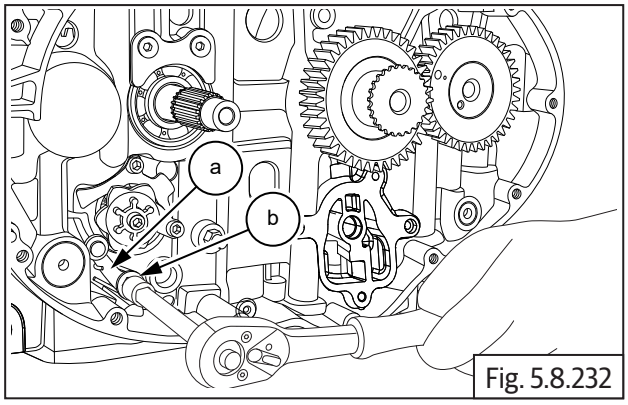

Fig. 5.8.232

	10 mm Socket with Torque wrench
Torque	10-12 N-m/1.0-1.2 kgf-m

NOTE
• *Handle stopper plate tension spring carefully else it may damage supporting components.*

Shifter Selector Shaft Assembly

5.8.38. Shifter Selector Shaft

- Assemble inner spring **(a)** from the longer side of shifter shaft **(b)**.
- Ensure the legs of the spring are correctly located in the plate on the shifter shaft.

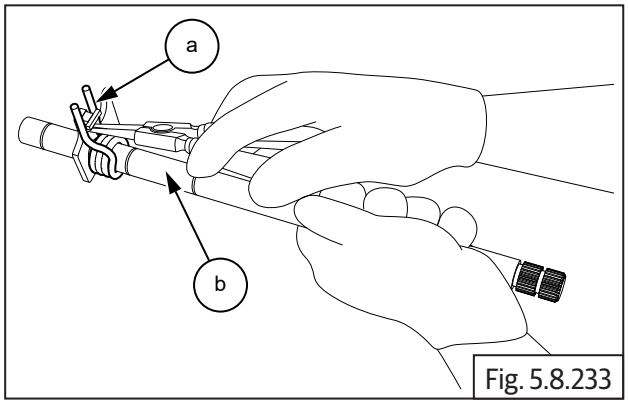

Fig. 5.8.233

	Circlip plier

- Assemble inner circlip **(a)** on longer end of shifter shaft **(b)**. Ensure it is properly seated on shifter shaft groove near the spring.

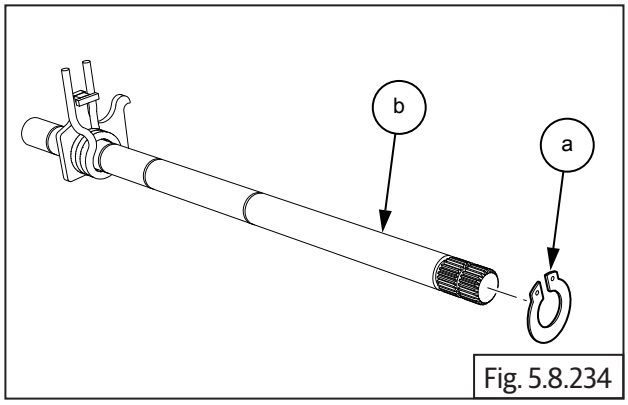

Fig. 5.8.234

	Circlip plier

- Assemble 1st inner washer **(a)** from the longer end of shifter shaft **(b)**.

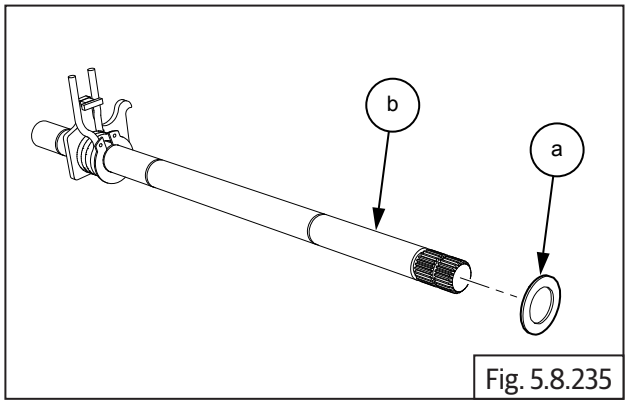

Fig. 5.8.235

- Assemble outer plate **(a)** from smaller end of shifter shaft with its projection facing towards the longer end of the shaft.
- Ensure the peg on the shifter shaft is located correctly in the hole on the outer plate **(a)**.

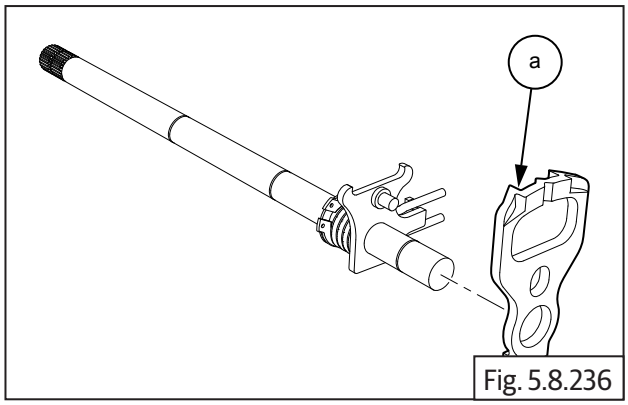

Fig. 5.8.236

- Assemble outer spring **(a)** from smaller end of shifter shaft.

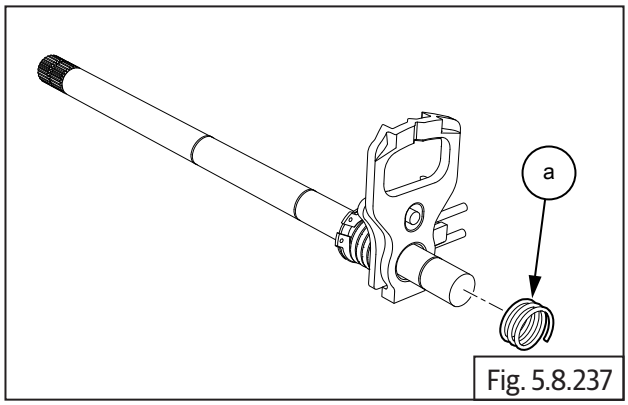

Fig. 5.8.237

- Assemble outer washer **(a)** from the smaller end of shifter shaft.

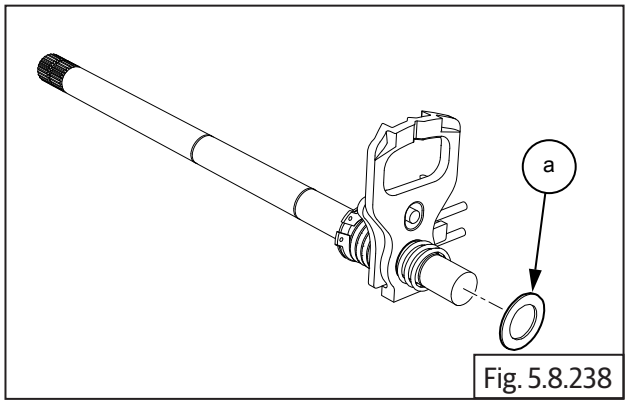

Fig. 5.8.238

- Assemble outer circlip **(a)** from smaller end of shifter shaft.

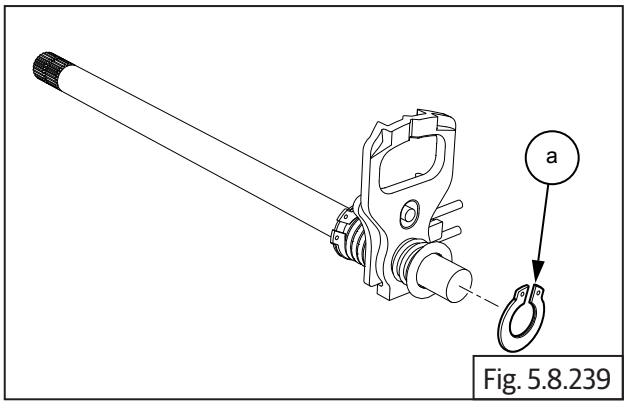

Fig. 5.8.239

	Circlip plier

- Insert longer end of the shifter shaft **(a)** into the hole in the lower crankcase from the RH side.
- Ensure the shifter plate is correctly seated over the star index.

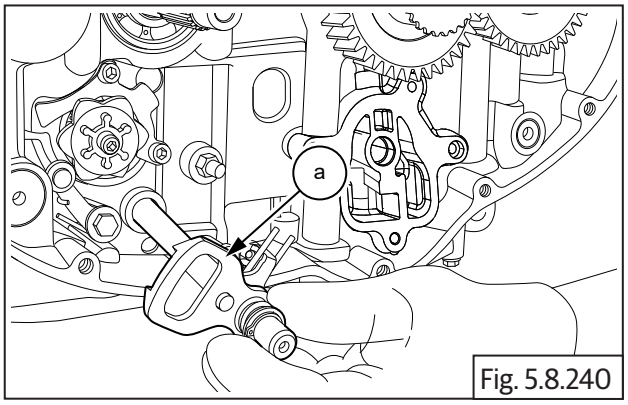

Fig. 5.8.240

- Assemble washer **(a)** on the shifter shaft on the LH side.

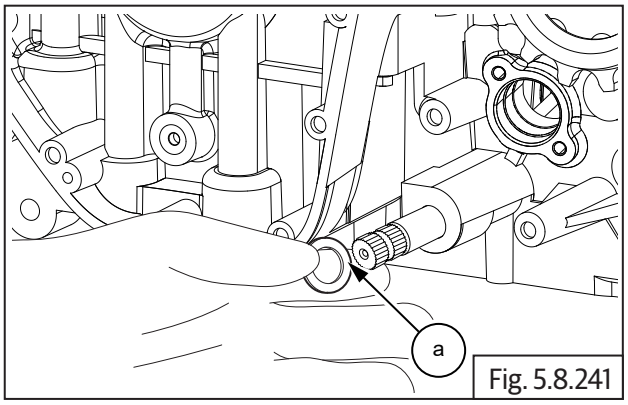

Fig. 5.8.241

- Assemble circlip **(a)** on the shifter shaft at the LH

side and ensure it is correctly seated and locked in the groove on the shifter shaft.

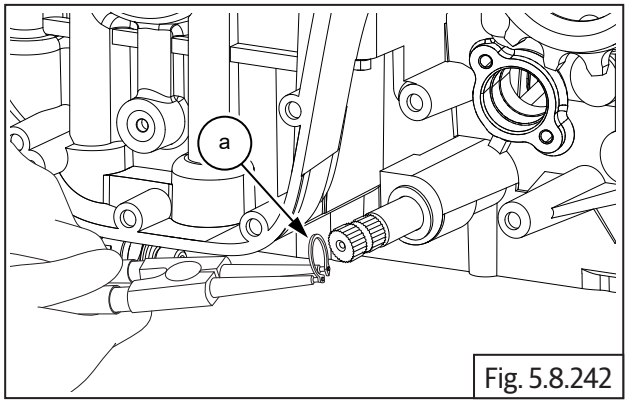

Fig. 5.8.242

	Circlip plier

5.8.39. Oil Pump

- Locate oil pump mounting point below crankshaft gear in RH crankcase.
- Assemble 4 Nos. Hex flange head bolts **(M6) (a)** on oil pump **(b)** and tighten bolts to specified torque.

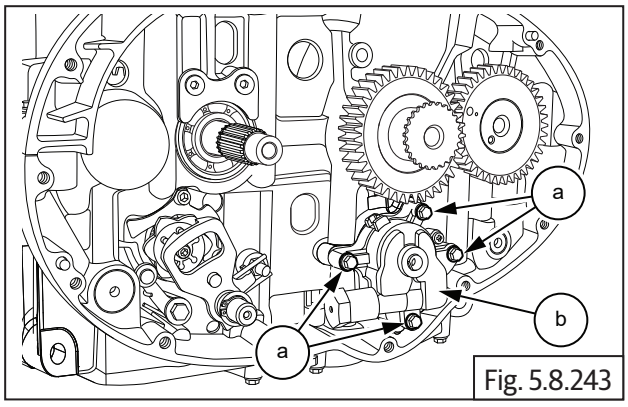

Fig. 5.8.243

	10 mm Socket with Ratchet
Torque	10-12 N-m/1.0-1.2 kgf-m

- Locate and fit oil pump drive chain **(a)** on crankshaft gear **(b)** and sprocket on oil pump.
- Pump Sprocket OUT and Pump Chain Coloured Link to be facing outside when assembling.

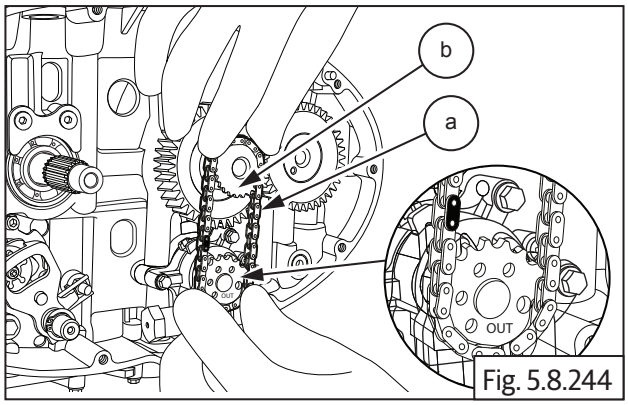

Fig. 5.8.244

- Locate Hex flange head bolt **(M6) (a)** on oil pump and tighten to specified torque.

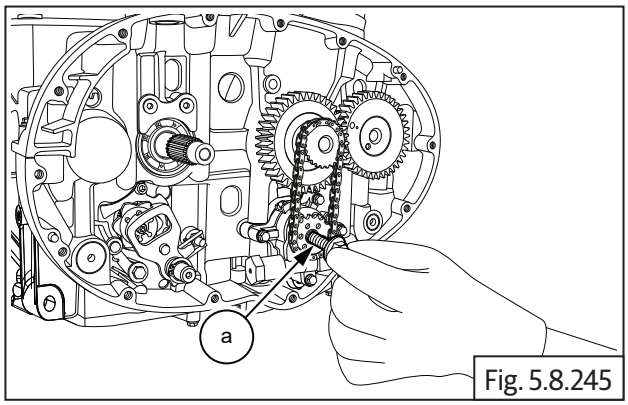

Fig. 5.8.245

NOTE
• *Lock the crank shaft by using special tool to prevent rotation while tightening bolt.*

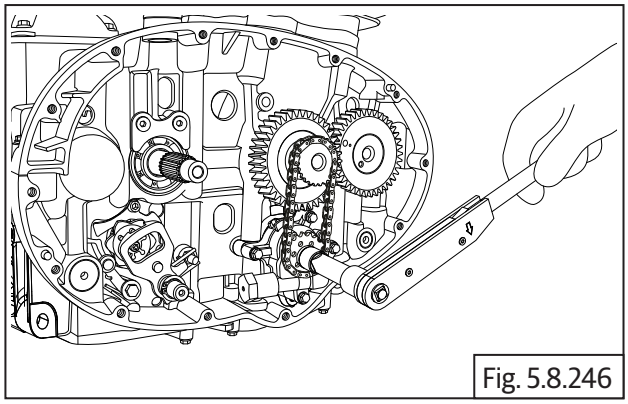
Fig. 5.8.246

	10 mm Socket with Torque wrench
Torque	10-12 N-m/1.0-1.2 kgf-m

Clutch Plate Assembly

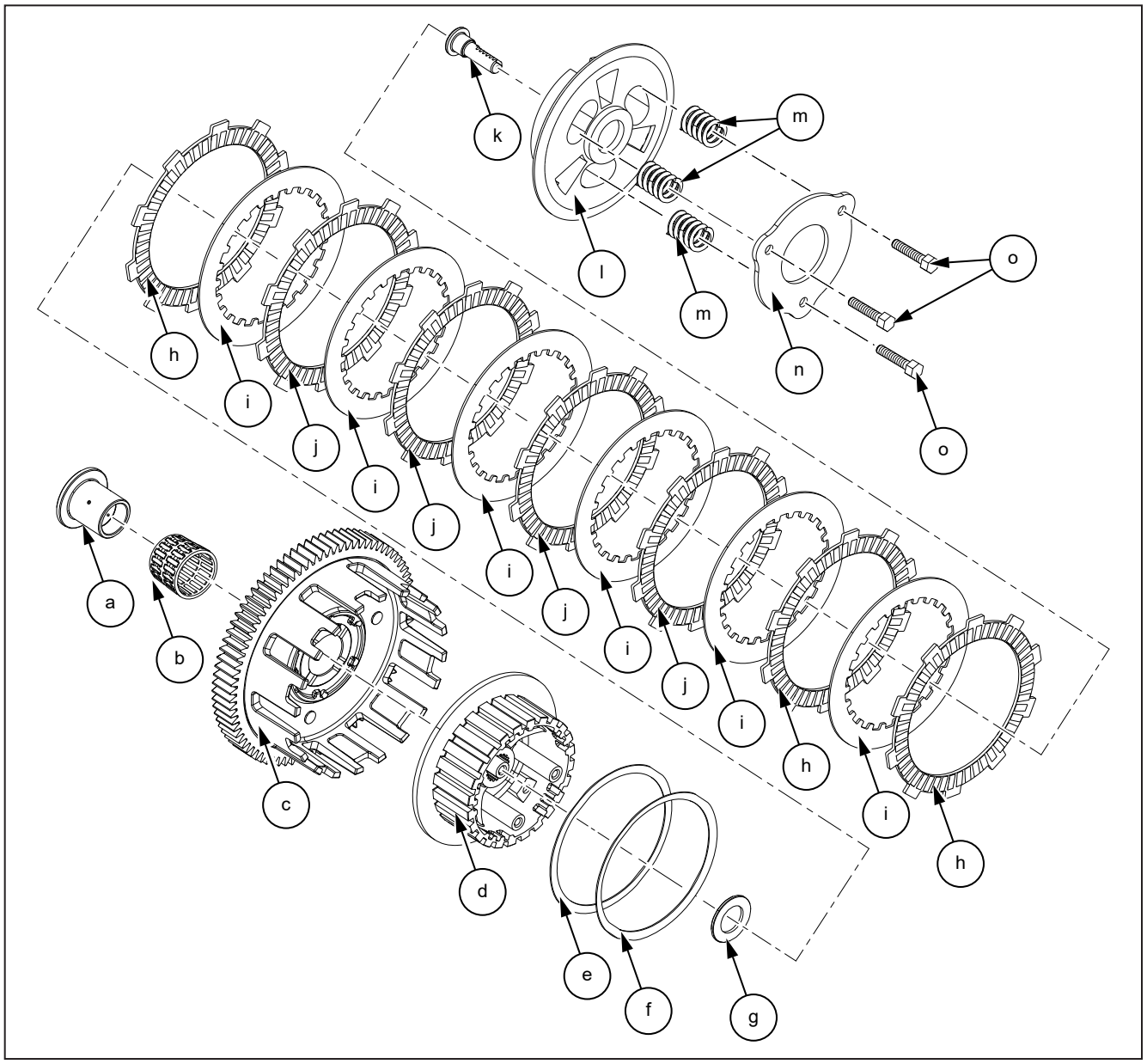

Item No.	Description	Quantity	Item No.	Description	Quantity
a	Collar bush	1	i	Clutch steel plates	6
b	Needle bearing	1	j	Clutch friction plates with smaller ID	4
c	Clutch Housing	1	k	Pull rod	1
d	Clutch bell	1	l	Clutch hub	1
e	Anti-Judder washer Plain	1	m	Springs	3
f	Belleville washer	1	n	Pressure plate	1
g	Thrust washer	1	o	Hex flange head bolts M6	3
h	Clutch friction plate with Bigger ID	3			

5.8.40. Clutch Assembly

- Ensure collar on bush **(a)** is facing inward and assemble it on countershaft **(b)**. Ensure it is seated properly.

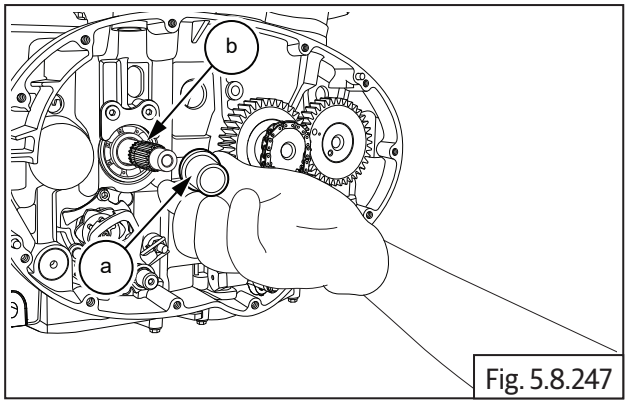

Fig. 5.8.247

- Assemble needle bearing **(a)** on countershaft **(b)**.

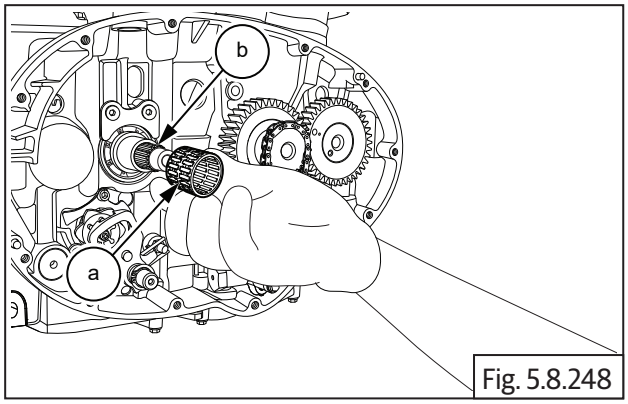

Fig. 5.8.248

- Locate clutch housing **(a)** on counter shaft, with its lugs **(b)** facing outside.
- Ensure the clutch housing gear is correctly meshed with the gear on crankshaft.

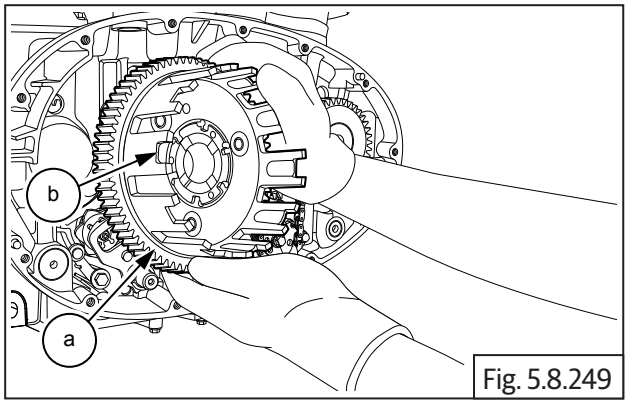

Fig. 5.8.249

- Assemble thrust washer **(a)** on countershaft.

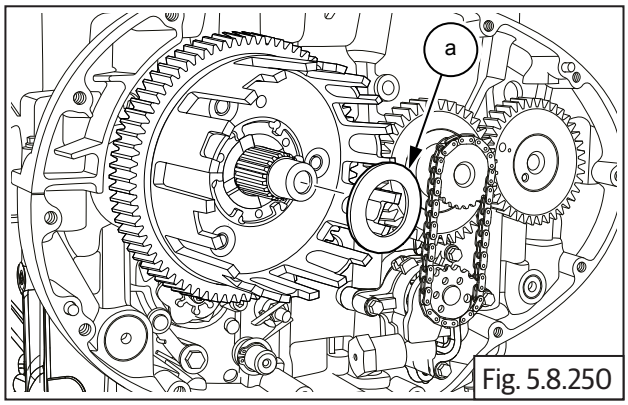

Fig. 5.8.250

- Locate bell assembly **(a)** on the splines on counter shaft **(b)**.

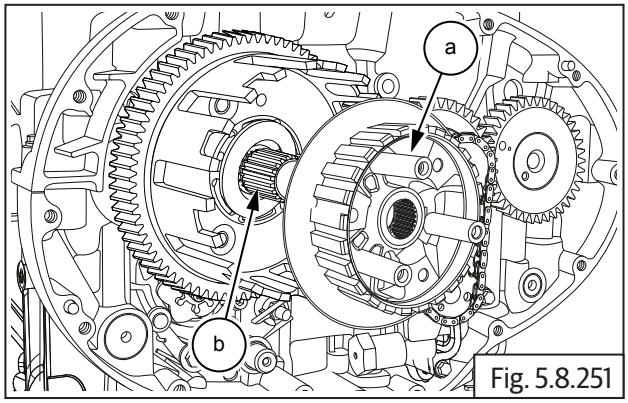

Fig. 5.8.251

- Locate the anti-judder steel washer-plain, in the groove in the clutch bell.
- Assemble Belleville washer over judder washer in the clutch bell.
- **Ensure the "hump" of the belleville washer is facing inside and seated against the judder washer.**
- Assemble 1st friction plate with larger ID (less friction area) ensuring the splines of the plate are correctly positioned and located on the clutch housing.
- Assemble 1st steel plate ensuring the splines on the plate are correctly positioned and located on the clutch bell.
- Assemble 2nd friction plate on the clutch housing and ensure it is seated against the 1st steel plate.
- Assemble 2nd steel plate on clutch bell.

- Assemble 3rd friction plate on clutch housing.

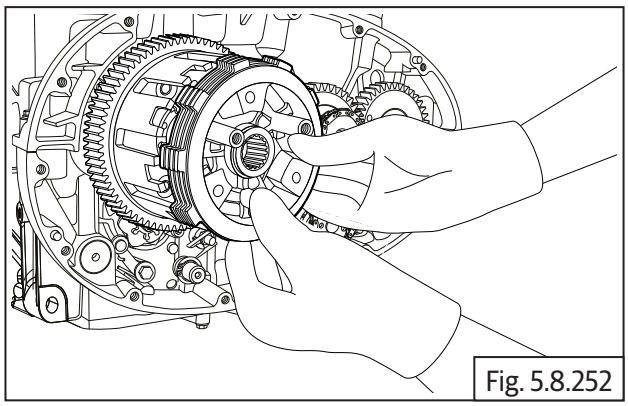

Fig. 5.8.252

- Assemble washer **(a)** on countershaft.

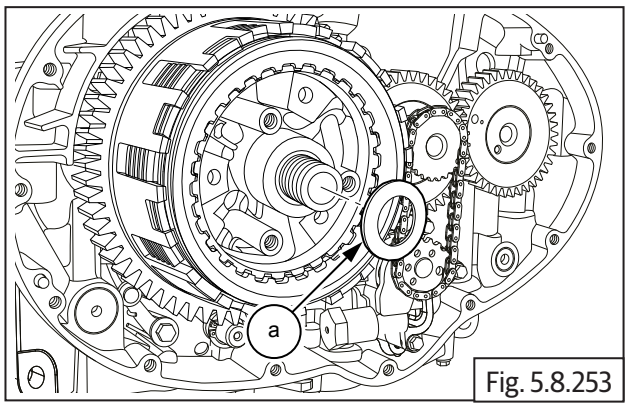

Fig. 5.8.253

- Locate the Hex "U" nut **(M17) (a)**.

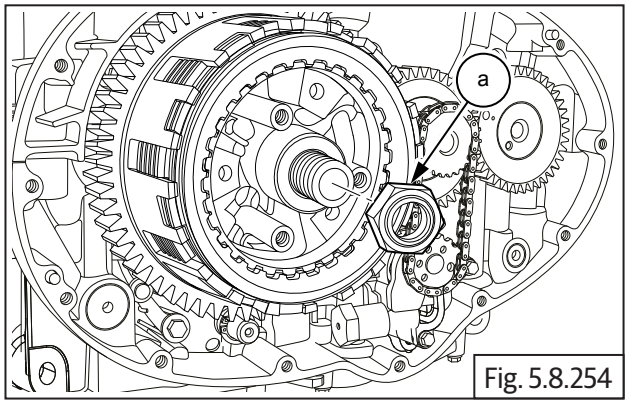

Fig. 5.8.254

⚠ CAUTION

Hex U nut is left hand thread. Turn anticlockwise to tighten nut on shaft.

- Locate and hold special tool on clutch assembly and tighten clutch hub nut to specified torque.

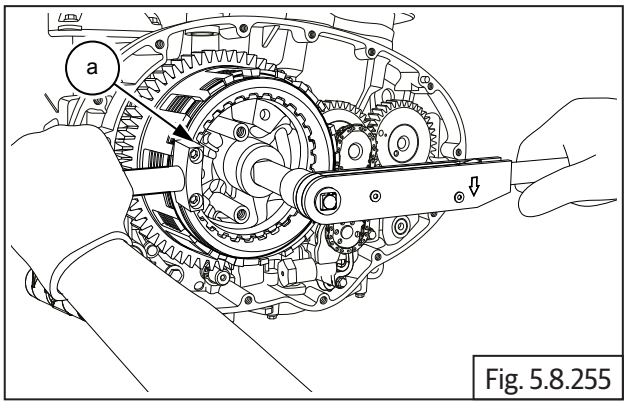

Fig. 5.8.255

SPL 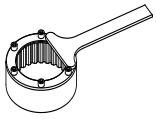	Part No: ST-27558-1 Part Name: Clutch plate holder with Torque wrench

Torque	110-130 N-m/11.0-13.0 kgf-m

- Remove special tool and further assemble the following
  - 3rd Steel plate on clutch bell .
  - 4th Friction plate on clutch housing.
  - 4th Steel plate on clutch bell.
  - 5th Friction plate on clutch housing.
  - 5th Steel plate on clutch bell.
- Locate 6th friction plate **(a)** with larger ID (less friction area) on clutch hub **(b)** and ensure it is seated properly against the inner face of the clutch hub.

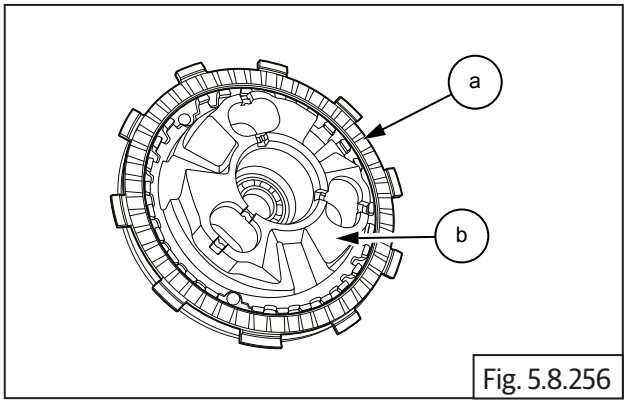

Fig. 5.8.256

- Locate 6th steel plate **(a)** on the splines in clutch hub **(b)** and ensure it is properly seated against the 6th friction plate.

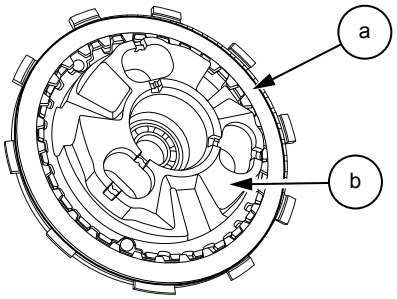

Fig. 5.8.257

- Locate 7th friction plate **(a)** with larger ID (less friction area) on clutch hub **(b)** such that its lugs are offset and between 2 lugs of the 6th friction plate.

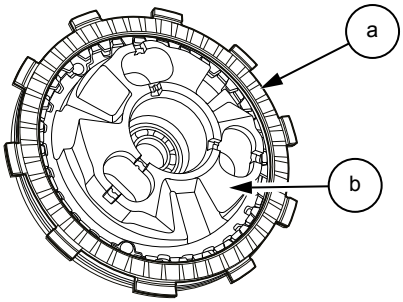

Fig. 5.8.258

- Locate clutch hub **(a)** into clutch bell duly ensuring the following:
- Insert pull rod **(b)** into clutch housing from the inside, such that the serrations on the pull rod are facing outside.
- Ensure pull rod is fully and properly seated against the bearing on the inside.

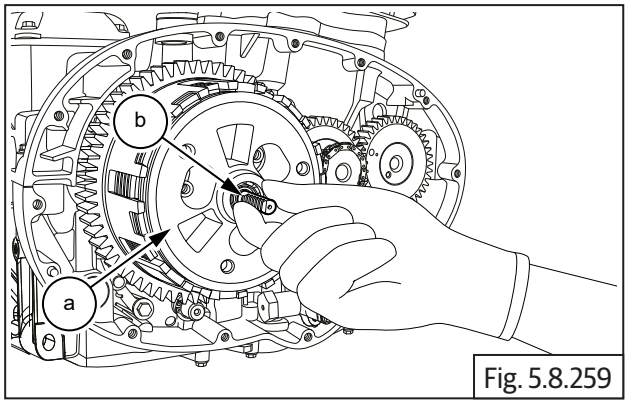

Fig. 5.8.259

- The outer lugs of 7th friction plate are correctly located in the INNER slots of the clutch housing.
- The outer lugs of 6th friction plate are correctly located in the OUTER slots of the clutch housing.
- The 3 lugs of the clutch hub are correctly positioned between the 3 slots in the clutch bell. (Gently rotate clutch hub back and forth, to match the slots of the clutch bell).
- The three mounting studs of the clutch bell are central to the slots in the clutch hub.
- Insert 3 Nos. compression springs **(a)** in hub.

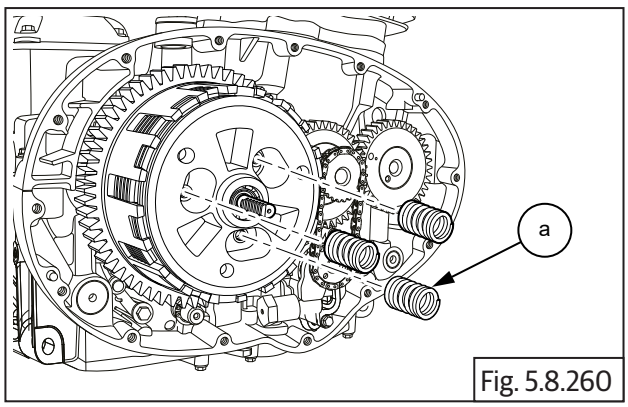

Fig. 5.8.260

- Locate pressure plate **(a)** on clutch hub with the words **"OUT"** and **"FR"** facing outside.
- Assemble 3 Nos. Hex bolts **(M6) (b)** and tighten pressure to clutch hub, sequentially to specified torque.

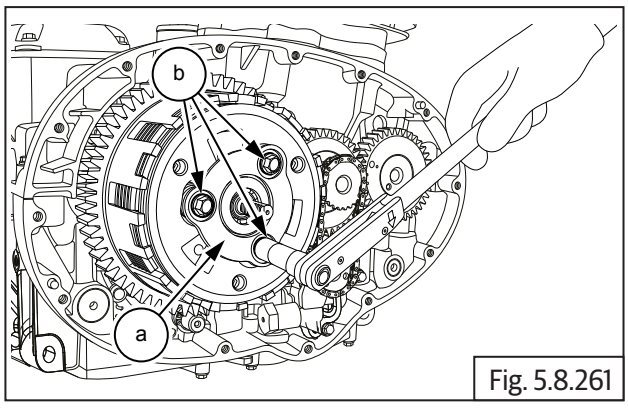

Fig. 5.8.261

	10 mm Socket with Torque wrench
Torque	10 N-m/1 kgf-m

5.8.41. Oil Level Window in Clutch Cover

- Locate new oil window **(a)** on clutch cover with the window facing towards clutch cover outer and gently press till it is seated fully inside.

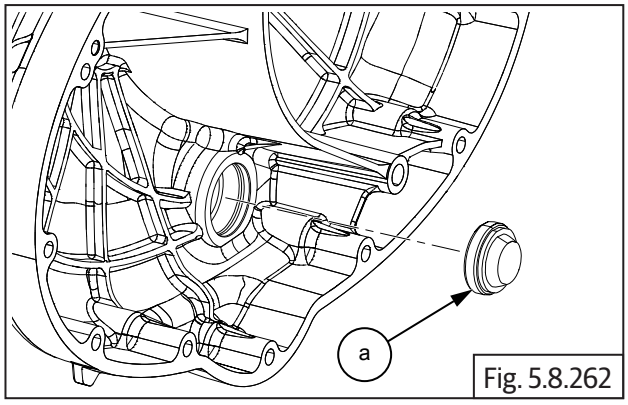

Fig. 5.8.262

- Assemble circlip **(a)** in the groove in clutch cover to lock the oil level window in place.
- Ensure circlip is correctly locked in the clutch cover.

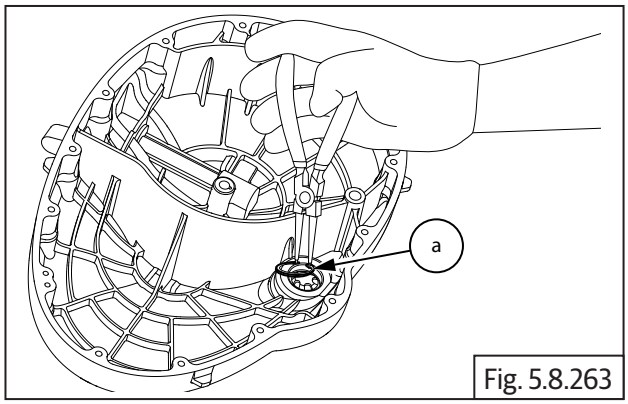

Fig. 5.8.263

	Circlip plier

NOTE
• *Apply Loctite 243 around the Oil Level Inspection window before installing in the clutch case.*

5.8.42. Clutch Actuating Lever Assembly

- Ensure needle bearings **(a)** are assembled in the clutch cover.

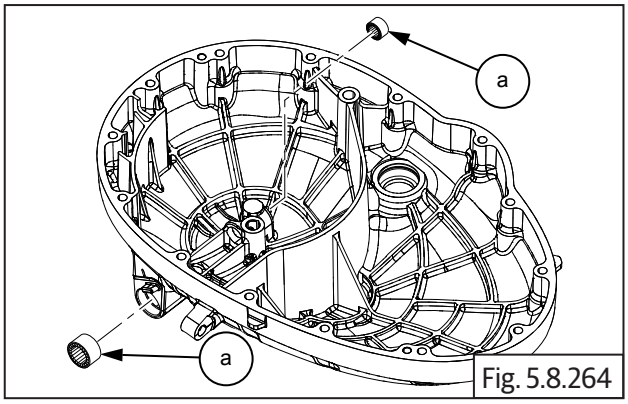

Fig. 5.8.264

SPL 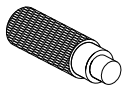	Part No: ST-27564-1
	Part Name: Clutch Act Lever top BRG Inst

SPL 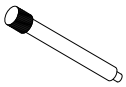	Part No: ST-27541-1
	Part Name: Clutch Act Lever Btm BRG Inst

- Insert clutch actuating shaft **(a)** into clutch cover **(b)** with the gear facing inside and the splines facing outside.

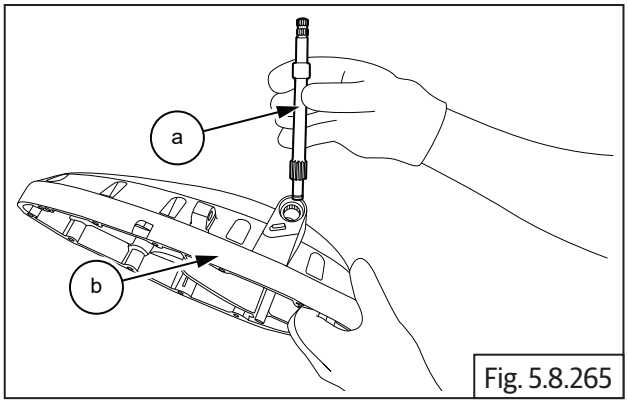

Fig. 5.8.265

- Assemble washer **(b)** on the shaft bottom inside the clutch cover.
- Assemble E-clip **(a)** in the slot in shaft bottom inside clutch cover.

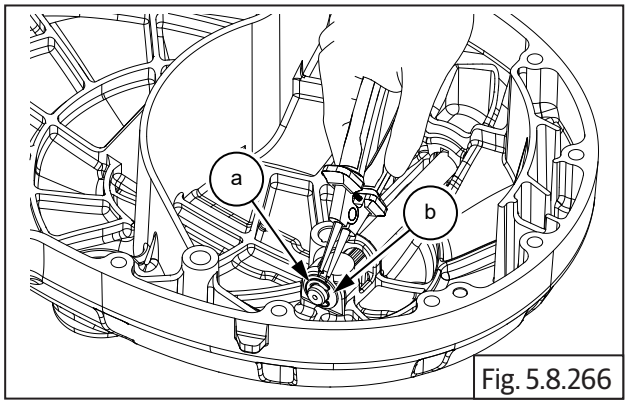

Fig. 5.8.266

	Nose plier

- Assemble new oil seal **(a)** into clutch cover at the top with the lips facing down.
- Assemble washer **(b)** above oil seal.

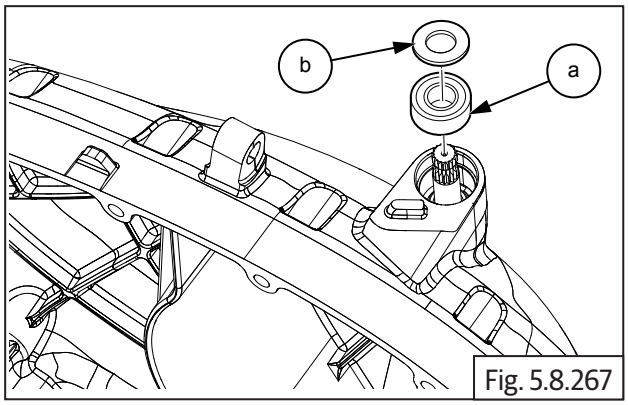

Fig. 5.8.267

5.8.43. Clutch Cover

- Ensure the 2 Nos. dowel pins **(a)** are seated properly on crankcase.

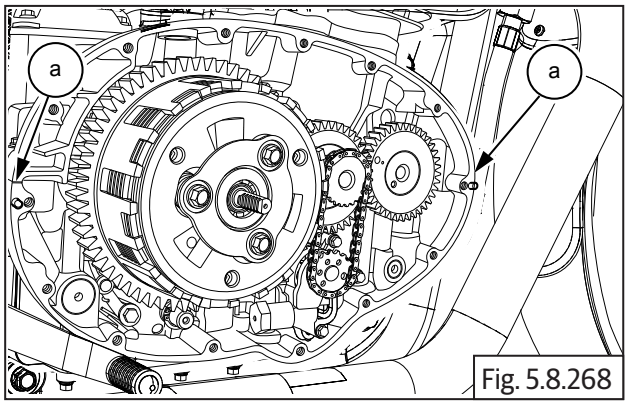

Fig. 5.8.268

- Install gasket **(a)** on crankcase if necessary smear engine oil and ensure it is properly seated on dowels. **Do not** use any sealant or adhesive.

NOTE
• *Apply Loctite 5910 over the dowel pins* **(a)**

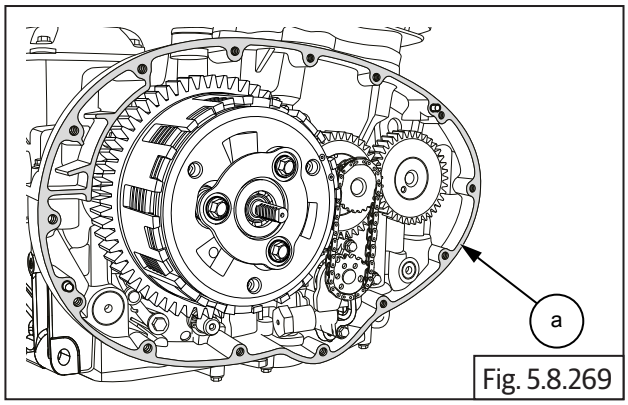

Fig. 5.8.269

- Ensure racks on the clutch pull rod is facing towards the rear of the engine.
- Hold the clutch cover **(a)** in position, rotate the clutch actuating shaft to ensure it is engaged correctly with the pull rod and gently tap cover inside to seat it on the dowels and crankcase.

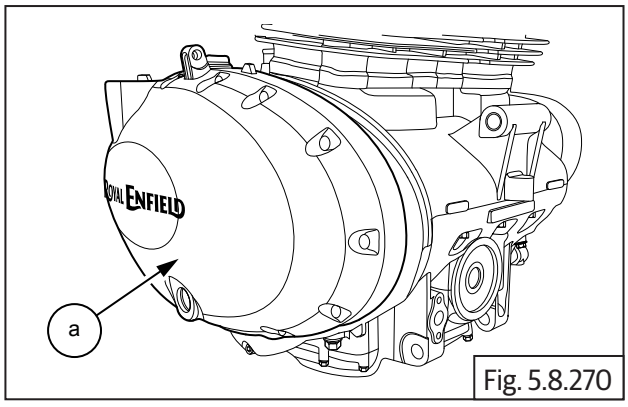

Fig. 5.8.270

- Locate 14 Nos. Hex socket bolts **(M6) (a)** on clutch cover and tighten them crisscross pattern.

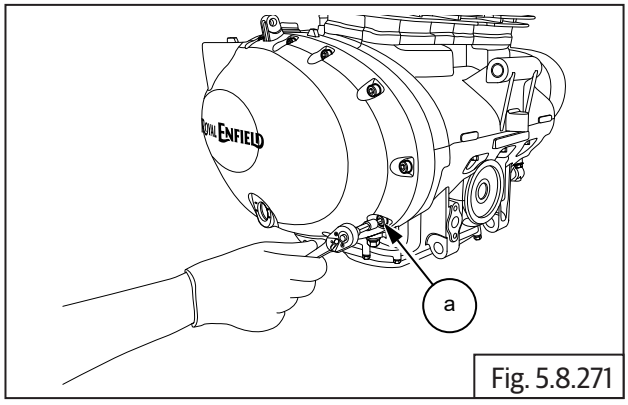

Fig. 5.8.271

	5 mm Allen socket with Ratchet

- Tighten bolts **(a)** evenly to specified torque.

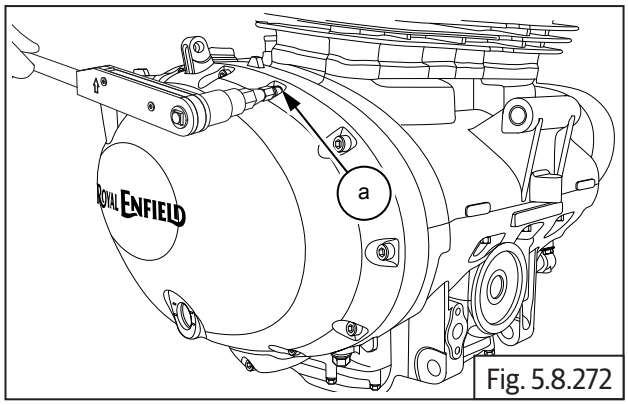

Fig. 5.8.272

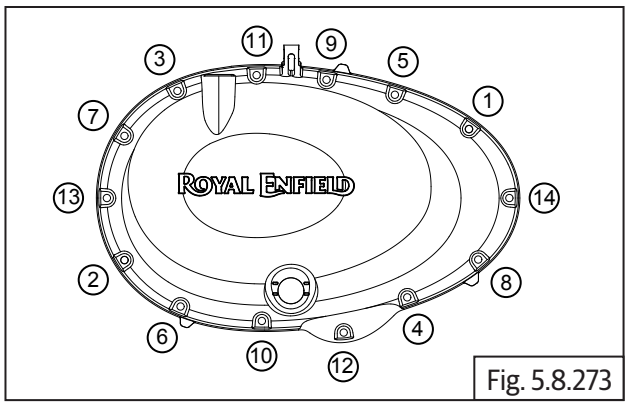

Fig. 5.8.273

	5 mm Allen socket with Torque wrench
Torque	10-12 N-m/1.0-1.2 kgf-m

- Assemble clutch release spring **(a)** on shaft with the "L" bend positioned against the lug **(b)** in clutch cover.

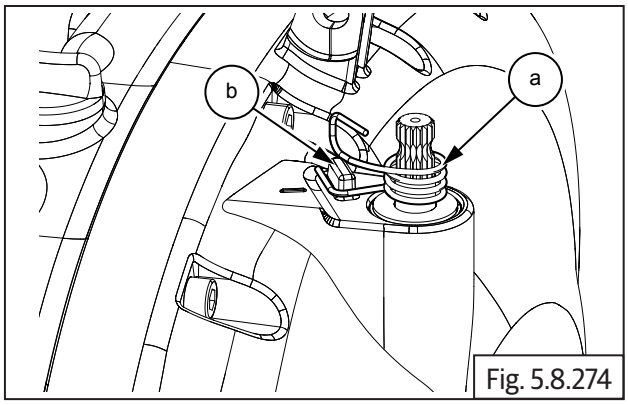

Fig. 5.8.274

- Rotate clutch shaft **(b)** clockwise till it stops. Ensure pinch bolt is sufficiently loose, position clutch lever on shaft at 11 'O' clock position and the inner side of the arm is aligned to the reference mark **(a)** on the clutch cover.

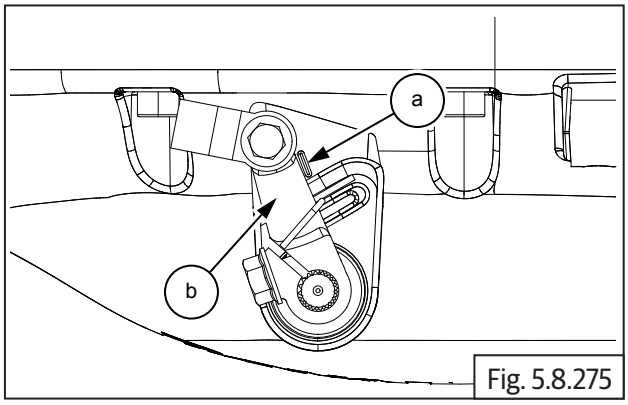

Fig. 5.8.275

- Tighten pinch bolt sufficiently such that the arm is firmly clamped on the shaft.
- Position the upper leg of the spring against the inside of the clutch release arm and check for proper spring action.

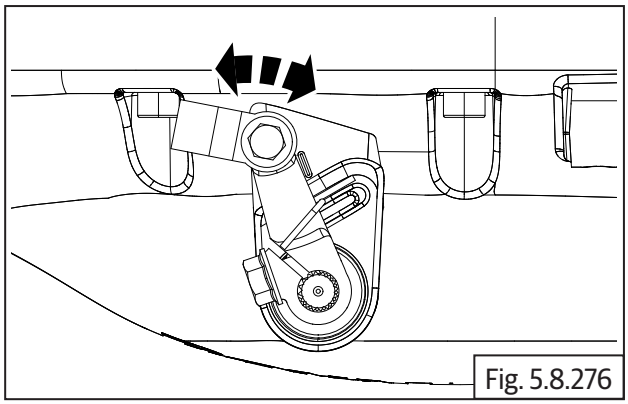

Fig. 5.8.276

5.8.44. Gear Position Sensor (GPS)

- Assemble gear position sensor on the LH side of lower crankcase duly ensuring the lug **(a)** in the GPS is located into the hole **(b)** in gear selector drum.

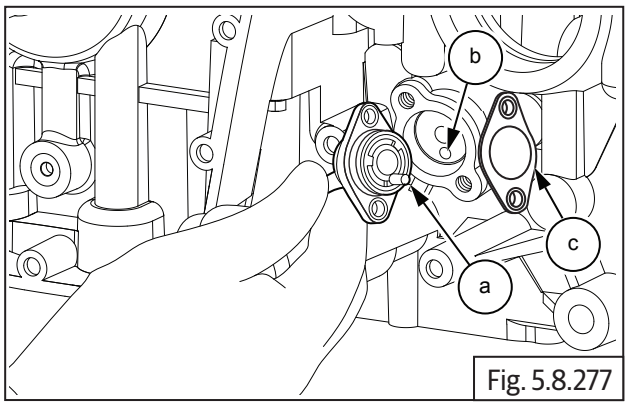

Fig. 5.8.277

- Position cable holder **(a)** over the GPS.
- Assemble 2 Nos. Hex flange head bolts **(M6) (a)** on the the cable holder and tighten cable holder and GPS to the crankcase on the LH side to specified torque.

	10 mm Socket with Torque wrench
Torque	10-12 N-m/1.0-1.2 kgf-m

NOTE
• *Replace Gasket whenever removed.*

5.8.45. FD Sprocket

- Assemble spacer **(a)** on drive shaft **(b)** on the LH side.

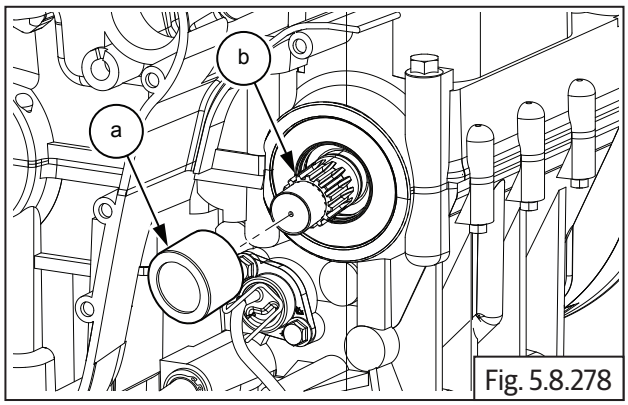

Fig. 5.8.278

- Locate oil seal **(a)** with its open end facing inwards on the crankcase on LH side and tap it in gently till the outer surface of the oil seal is flush with the crankcase **(b)**

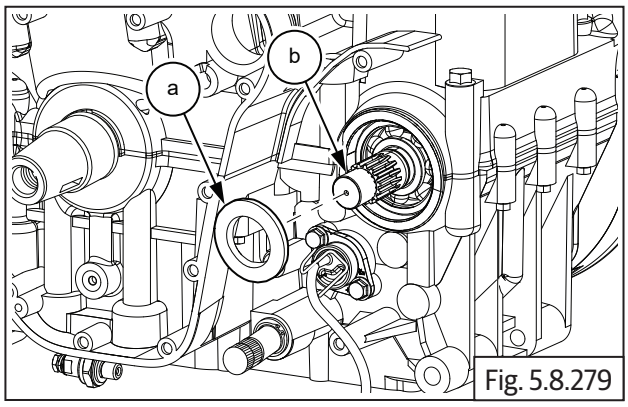

Fig. 5.8.279

- Assemble FD sprocket **(a)** on countershaft **(b)**.

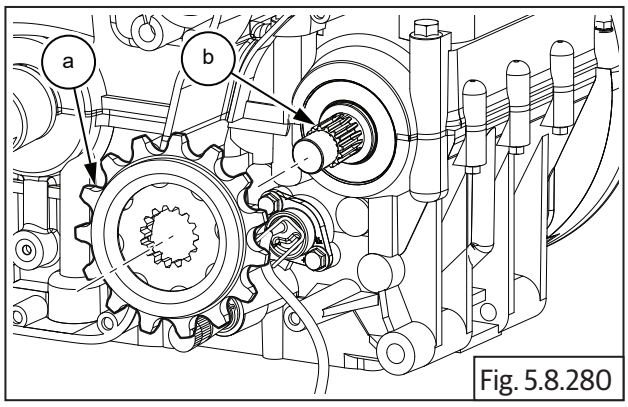

Fig. 5.8.280

- Install splined washer **(a)** on driveshaft **(b)**.

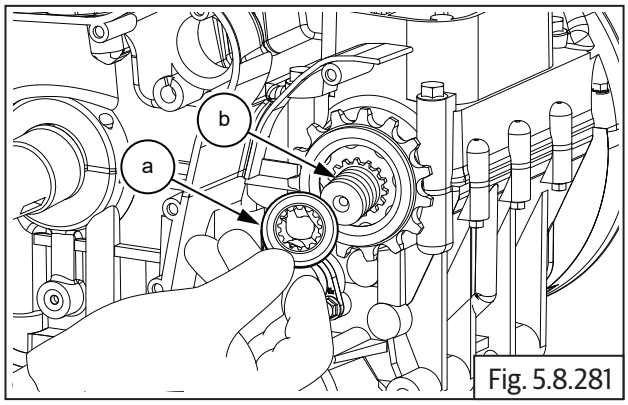

Fig. 5.8.281

- Assemble FD sprocket nut **(M20) (a)** on driveshaft .

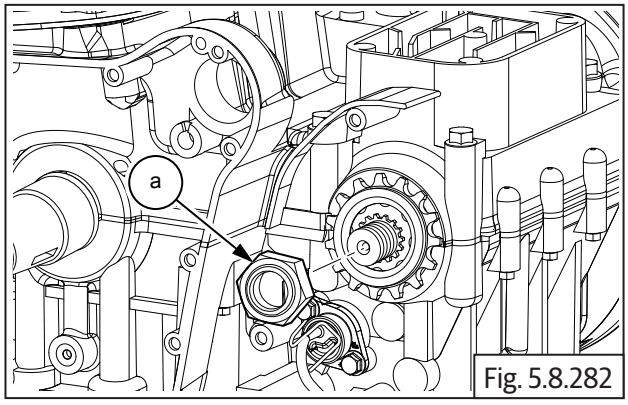

Fig. 5.8.282

- Locate special tool **(a)** over FD sprocket and tighten nut to specified torque.

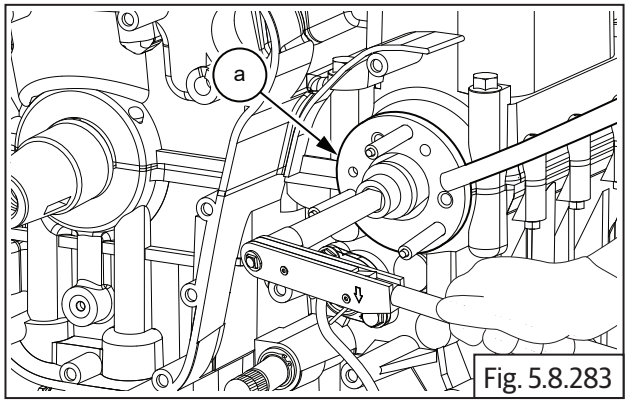

Fig. 5.8.283

SPL	Part No: ST-27534-2
	Part Name: FD sprocket holder with Torque wrench

	30 mm Socket with Torque wrench
Torque	130-160 N-m/13.0-16.0 kgf-m

- Gently bend the tab washer **(a)** outer, to seat against a flat surface of the hex nut **(b)** with a flat chisel to prevent the nut from loosening during use.

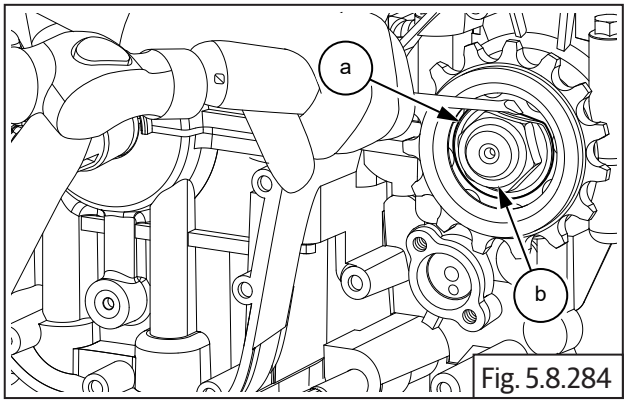

Fig. 5.8.284

	Chisel and Hammer

5.8.46. Magneto Cover Sub Assembly

Stator coil with CPS in Magneto cover

- Position stator coil **(a)** inside magneto cover such that .
  - The Crank position sensor is seated at its mounting location .
  - Magneto wires and grommet are aligned to the slot on the top of the cover .
  - The stator mounting holes are aligned to the mounting holes in magneto cover.

- Locate 3 Nos. Hex socket head bolts **(M6) (b)** in the stator coil mounting holes and tighten evenly to specified torque.

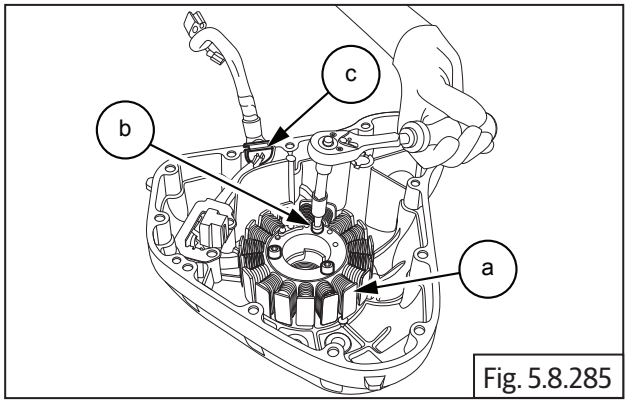

Fig. 5.8.285

	5 mm Allen socket with Ratchet
Torque	10-12 N-m/1.0-1.2 kgf-m

- Locate guide plate **(b)** over the CPS **(a)**, ensure the mounting holes of the guide plate, CPS are aligned to the mounting holes in magneto cover.
- Locate 2 Nos. Hex socket head screws **(M5) (c)** on the guide plate and tighten evenly to specified torque.

NOTE
• *Apply Loctite 5910 on the gromet assemby* ***(c)*** *before installation*

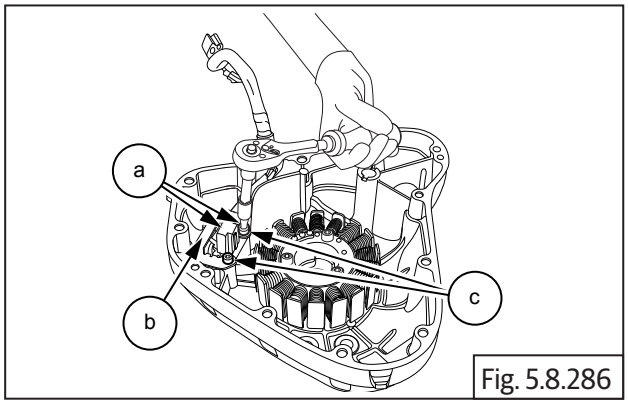

Fig. 5.8.286

	4 mm Allen socket with Ratchet
Torque	10-12 N-m/1.0-1.2 kgf-m

- Locate dowel pins **(a)** into crankcase.

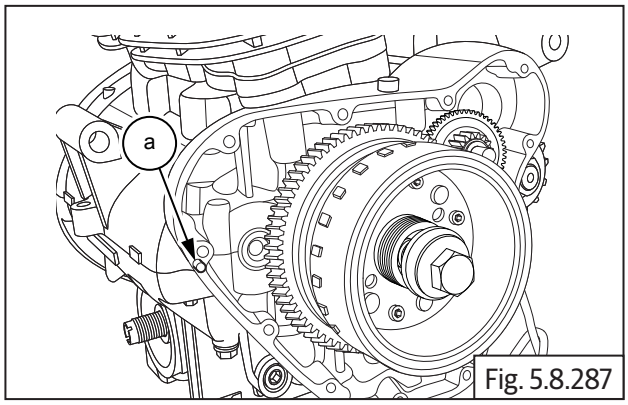

Fig. 5.8.287

- Install gasket **(a),** if necessary smear engine oil and ensure it is properly seated on dowels.

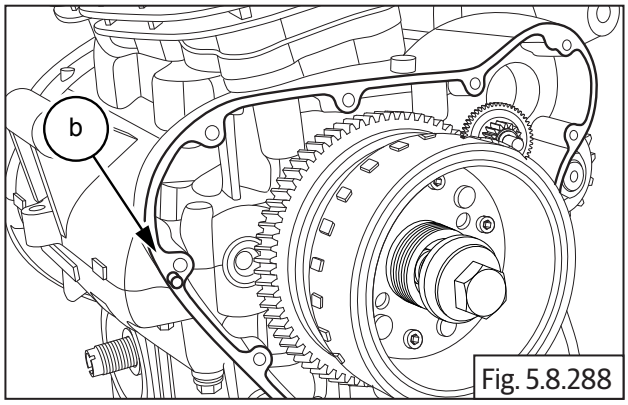

Fig. 5.8.288

NOTE
• *Apply Loctite 5910 on the marked location* **(b)**.

- Align the magneto cover such that the stator coils are located into the magneto rotor and ensure proper seating of the cover against the gasket.

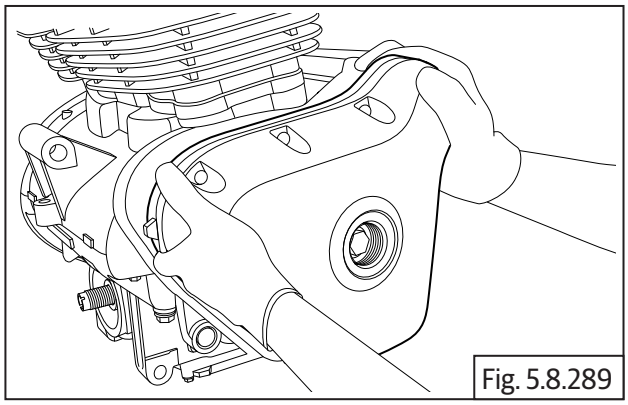
Fig. 5.8.289

⚠ CAUTION

Magnetic force from the rotor may cause misalignment of the cover during assembly. please ensure cover is centralized and seating properly before tightening the screws.

- Locate 12 Nos. Hex socket bolts **(M6) (a)** on magneto cover **(b)** and tighten it in a crisscross pattern.
- Tighten the bolts evenly to specified torque.

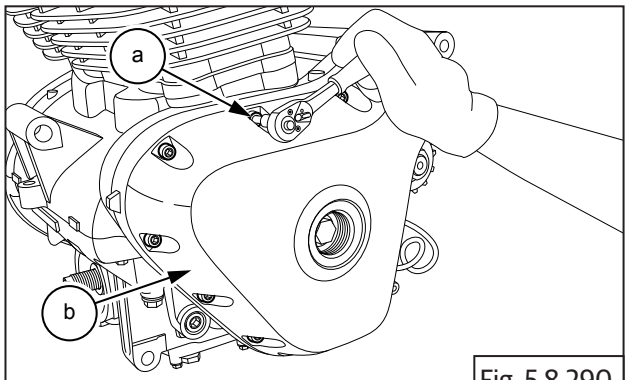

Fig. 5.8.290

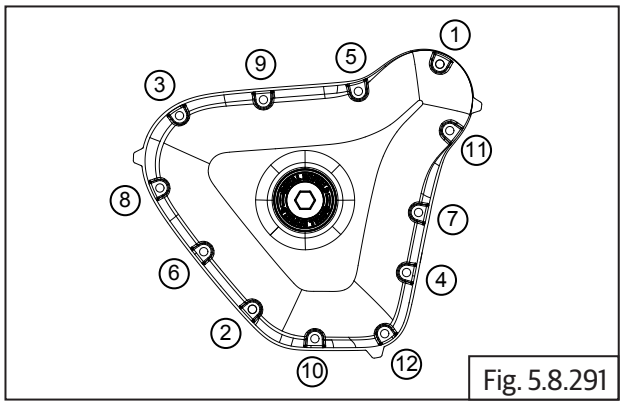

Fig. 5.8.291

	5 mm Allen socket with Ratchet
Torque	10-12 N-m/1.0-1.2 kgf-m

- Locate O-ring **(a)** on plug **(b)**.

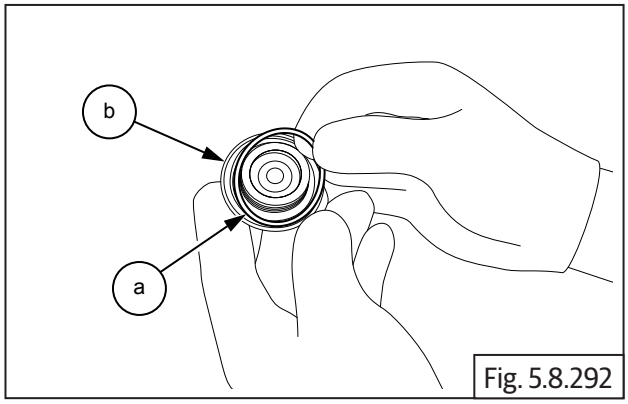

Fig. 5.8.292

NOTE

- *Replace the O ring with a new one whenever removed.* ***DO NOT*** *reuse.*

- Assemble plug **(M34) (a)** on center of magneto cover and tighten it to specified torque.

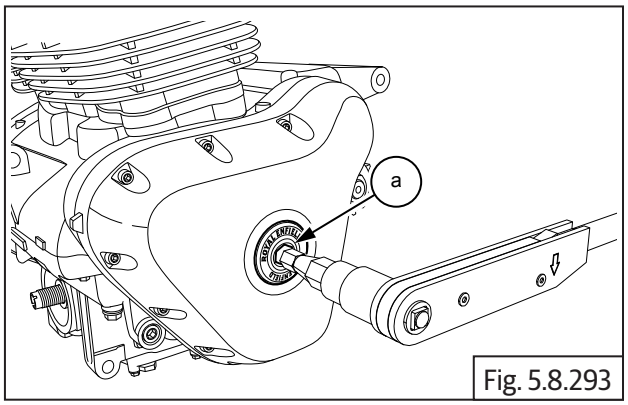

Fig. 5.8.293

	14 mm Allen socket with Ratchet
Torque	20-22 N-m/2.0-2.2 kgf-m

- Ensure the magneto and gear position sensor wiring is correctly routed through the crankcase assembly.

5.8.47. Starter Motor

NOTE

- *Do not tap on the starter motor. It may damage the internal parts.*
- *Inspect the starter drive shaft teeth for any wear-out OR damages.*
- *Replace the O Ring when removed. Do not reuse.*
- *Apply Loctite Silicon Lube in O Ring before Installation*
- *Apply Loctite 243 manually on the threads of the starter motor bolts before installation.*

- Locate starter motor **(a)** into the upper crankcase housing **(b)** LH.

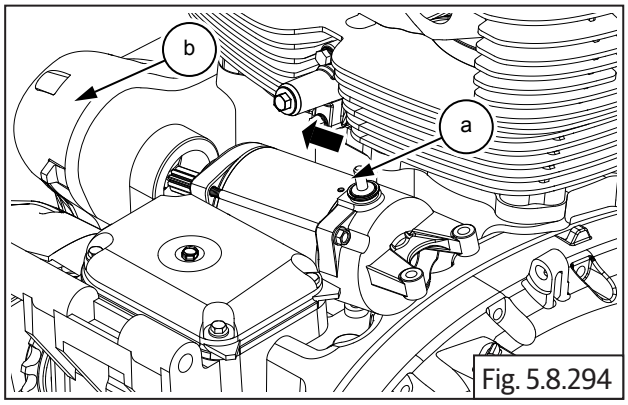

Fig. 5.8.294

- Locate and install 2 Nos. Hex head flange bolts **(M6) (a)** on starter motor **(b)**.

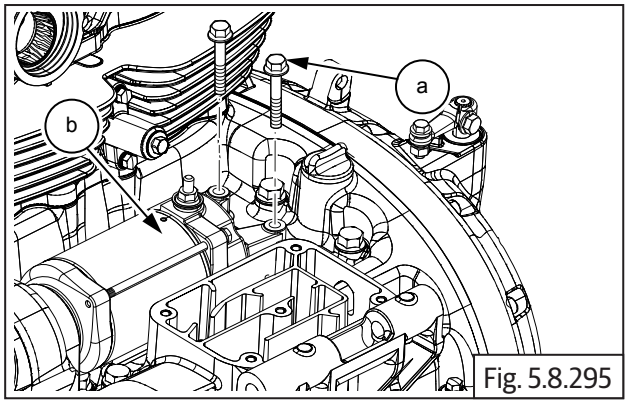

Fig. 5.8.295

	10 mm Socket with with torque wrench
Torque	10-12 N-m/1.0-1.2 kgf-m

5.8.48. Breather Box

- Locate gasket **(a)** on breather box cover **(b)** and assemble breather box cover on engine.

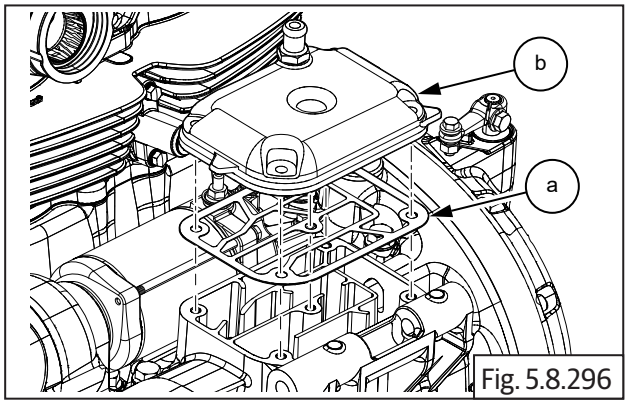

Fig. 5.8.296

- Install and tighten 5 Nos. Hex-head flange bolts **(M6) (a)** to specified torque.

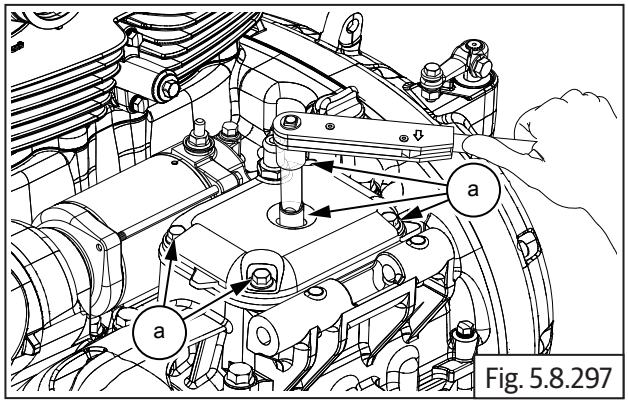

Fig. 5.8.297

	10 mm Socket with Torque wrench
Torque	10-12 N-m/1.0-1.2 kgf-m

- Fit breather hose **(a)** into intake manifold and install clamp.

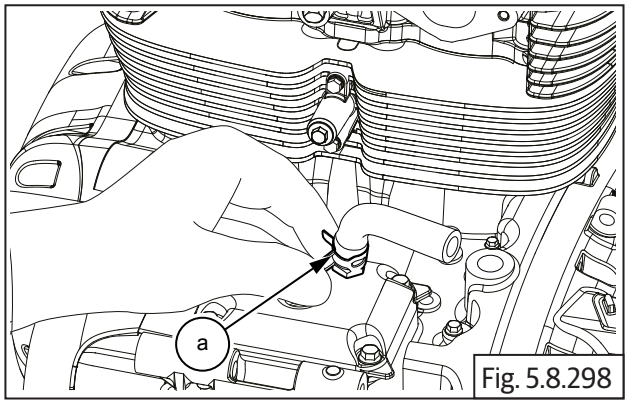

Fig. 5.8.298

5.8.49. Oil Filter

- Ensure O-ring **(a)** is seated properly over the oil filter **(b)**.
- Apply thin layer of fresh engine oil over O-ring.

- Assemble the oil filter union **(d)** .

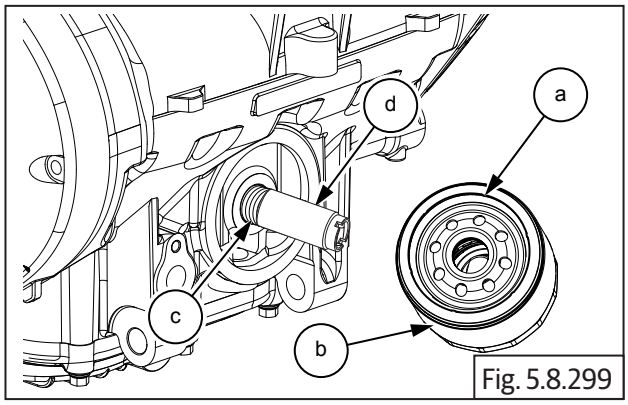

Fig. 5.8.299

SPL	Part No: ST-30293-A
	Part Name: Oil Filter Union Wrench

- Locate oil filter into crankcase.
- Tighten oil filter **(a)** using special tool **(b)** to specified torque.

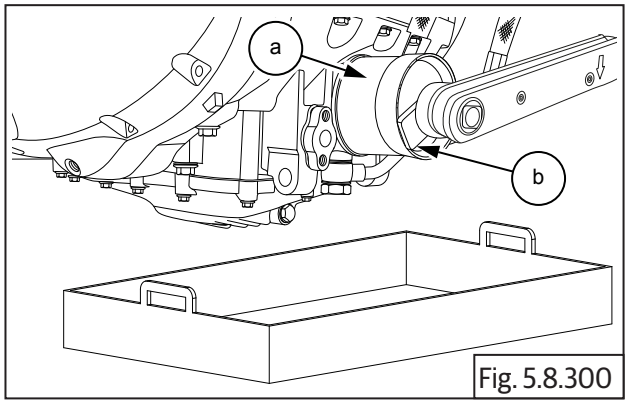

Fig. 5.8.300

SPL	Part No: ST30294/a
	Part Name: Oil Filter wrench with Torque wrench

ENGINE TROUBLESHOOTING

5.9 Engine Troubleshooting

Symptom	Possible Cause	Diagnosis	How to Fix	Spec. Limit
Poor/Weak Compression	Spark plug is loose	Spark plug is not tightened to torque	Check and tighten spark plug to specified torque.	
		Threads are stripped OR damaged on spark plug OR cylinder head	Inspect spark plug tightening threads in cylinder head for wear-out/damage. Replace cylinder head assembly. Inspect spark plug threads for any damages OR wear-out. Replace spark plug.	
	No clearance between rocker arm and valve stem	Tappet is adjusted too tight (Causing valves to be partially open in TDC compression stroke)	Refer tappet adjustment. Adjust valve clearance as per specifications.	Inlet: 0.08mm Exaust: 0.18mm
	Valve(s) movement sticky in valve guide(s)	Valve stem is partially seized in valve guide	Check valve(s) for free movement in valve guide(s). Replace as required.	
		Valve stem(s) bent		
	Valve(s) stuck open after compression stroke (Valve timing)	Sprocket is incorrectly aligned to cam shaft	Check and align sprocket correctly on cam shaft.	
		Cam shaft rotation is partially seized (sticky) in cylinder head	Check cam shaft for free movement in cylinder head. Replace as required.	
	Cylinder head gasket leakage	Uneven head bolt torque	Remove and inspect cylinder head/cylinder barrel seating surfaces for warpage, damage, unevenness, etc. Replace cylinder head gasket and tighten cylinder head bolts to specified torque.	Warpage: 0.01mm Torque: 1st: 15Nm (1.5kgm) 2nd: 35Nm (3.5kgm) Angular torque: 150°.
		Uneven/damaged seating surface on cylinder head/cylinder barrel		

Symptom	Possible Cause	Diagnosis	How to Fix	Spec. Limit
Poor/Weak Compression	Piston rings are worn out	Excessive gap in piston rings at the end in cylinder barrel	Inspect piston rings and cylinder barrel for excessive wear out. Replace piston rings/piston with rings. Replace cylinder barrel assembly if cylinder barrel is worn out.	Top ring 1: 0.300m Top ring 2: 0.400mm
	Piston scuffed/ partially seized in cylinder barrel	Piston scuffed/ damaged/partially seized in cylinder barrel	Inspect cylinder barrel for damages/heavy scoring and replace piston assembly AND/OR cylinder barrel as required.	
Engine Overheating	Oil level is low	External oil leakage	Inspect all joints carefully for oil leaks and rectify.	
		Excess oil consumption	Check for smoke through exhaust in hot condition, inspect valve stem seals, valve stem to guide excess clearance, piston rings wear-out, and piston/ cylinder barrel wear-out/ damage. Repair/replace accordingly.	
	Engine oil is contaminated	Non recommend engine oil is used Metal particles found in oil	Drain oil, replace oil filter and fill fresh engine oil as per Royal Enfield recommendation.	Refill qty: 3.1 Liters / 0.82 Imperial gallon.
	Engine oil has lost viscosity	Engine oil is contaminated and too thin		
	Engine oil looks too black/highly viscous	Engine oil is not changed as per recommended maintenance schedule		Replace every 10000 km / 6000 miles / 12 months.

Symptom	Possible Cause	Diagnosis	How to Fix	Spec. Limit
Engine Overheating	Low engine oil pressure	Strainer is blocked	Remove oil sump cover and strainer, Clean/replace oil strainer. Replace oil filter and fill fresh engine oil as per Royal Enfield recommendation.	
		Poor delivery by oil pump	Check oil pressure, inspect oil pump for internal blocks OR wear out. Clean & replace oil pump as required. Replace oil filter and fill fresh engine oil as per Royal Enfield recommendation.	
	Poor cooling of oil	Oil cooler fins are clogged. Oil cooler pipes have internal blocks	Clean oil cooler fins & replace if fins are damaged excessively. Check oil cooler pipes for blocks & clean/replace pipes as required.	
	No clearance between rocker arm and valve stem	Tappet(s) adjusted is too tight (Causing valves to be partially open in TDC compression stroke)	Check and adjust tappet clearances to specifications.	Inlet: 0.08mm Exhaust: 0.18mm

Symptom	Possible Cause	Diagnosis	How to Fix	Spec. Limit
Engine Overheating	Partial seizure of Engine internals	Rocker arm(s)is partially seized (sticky) in spindle(s)	Check rocker arm(s) for free movement in spindle(s).	
		Cam shaft rotation is partially seized (sticky) in cylinder head	Check cam shaft for free movement in cylinder head.	
		Valve stem is partially seized (sticky) in valve guide	Check valve(s) for free movement in valve guide(s).	
		Piston is scuffed/ damaged/partially seized in cylinder barrel	Inspect cylinder barrel for damages/heavy scoring and replace piston assembly AND/OR cylinder barrel as required.	
		Connecting rod is partially seized in crank shaft assembly	Dismantle engine, inspect all internal parts, replace as required and reassemble engine.	
		Journal bearings/ crankshaft/balancer shafts are seized		
	Transmission drag	Bearings/Gear/Bushes in the shaft are seized	Dismantle engine, inspect all internal parts, replace as required and reassemble engine.	

Symptom	Possible Cause	Diagnosis	How to Fix	Spec. Limit
Excessive Engine Oil Consumption/ Smoke (Bluish White)	Excess oil in Engine	Engine oil is filled excessively	Drain and refill oil to correct specifications. Replace oil filter. Inspect and clean air box and breather hoses for excess oil.	Refill qty: 3.1 Liters / 0.82 Imperial gallon.
	Engine oil is contaminated	Engine oil is NOT as per Royal Enfield recommendation	Drain oil, replace oil filter and fill fresh engine oil as per Royal Enfield recommendation.	Replace every 10000 km / 6000 miles / 12 months.
	Engine oil looks too black/highly viscous	Engine oil is not changed as per recommended maintenance schedule	Drain oil, replace oil filter and fill fresh engine oil as per Royal Enfield recommendation.	Replace every 10000 km / 6000 miles / 12 months.
	Relief valve in oil pump malfunction	Remove and inspect oil pump relief valve	Remove oil pump and clean OR replace the relief valve.	
	Valve stem seal failure	Valve stem seal(s) is cracked OR loose in valve guide	Inspect Stem seals; if defective replace full set.	
	Valve stem to valve guide clearance is excess	Valve guides worn out excessively	Inspect valve stem guide. If the clearance is out of specification; replace head assembly.	Valve stem service limit: 0.012mm. Valve to guide max clearance: 0.212mm.
	Valve stem is scuffed/scored	Valve stem seal(s)is cracked OR worked loose from valve guide	Inspect Stem seals; if defective replace full set.	
	Piston rings are stuck in piston ring grooves	Wet/excessive carbon build up in ring grooves in piston/on rings	Release piston ring(s) carefully from piston ring groove(s), clean and replace with new rings. Inspect cylinder for damages.	

Symptom	Possible Cause	Diagnosis	How to Fix	Spec. Limit
Excessive Engine Oil Consumption/ Smoke (Bluish White)	Piston rings are worn out	Excessive gap in piston rings at the end in cylinder barrel	Inspect piston rings and cylinder barrel for excessive wear out. Replace piston rings/ piston with rings. Replace cylinder barrel assembly if cylinder barrel is worn out.	Top ring 1: 0.300mm Top ring 2: 0.400mm Cylinder barrel/ Piston max clearance: 0.060mm
	Piston is seized in cylinder barrel	Piston is scuffed, damaged OR partially seized in cylinder barrel	Inspect cylinder barrel for damages/heavy scoring and replace piston assembly AND/OR cylinder barrel if required.	
	Partial seizure of engine internals	Connecting rod is partially seized in crank shaft assembly	Dismantle engine, inspect all internal parts, replace as required and reassemble engine.	
		Journal bearings/ crankshaft/balancer shafts are seized		

Symptom	Possible Cause	Diagnosis	How to Fix	Spec. Limit
Engine Noise Top End	Exhaust gas leak between cylinder head and exhaust pipe	Exhaust pipe(s) flange mounting nuts are loose AND/OR seal is deformed OR damaged	Dismantle exhaust pipe(s) from cylinder head; replace gasket and tighten flange mounting to specified torque.	
	Tappet adjuster(s)is worn out	"Elephant foot" on tappet adjuster(s)is worn out/pitted	Inspect “Elephant foot” and replace if worn-out OR damaged.	Inlet: 0.08mm Exhaust: 0.18mm
	Excessive clearance between rocker arm and valve stem	Tappet(s)is adjusted too loose	Check and adjust tappet clearances to specifications.	
	Rocker arm(s) movement is sticky	Rocker arm(s) is partially seized (sticky) in spindle(s)	Inspect rocker arm spindle for scoring OR damage. Inspect rocker arm spindle clearance and replace if required.	
	Rocker arm(s) has excessive clearance in spindle(s)	Rocker arm(s) and spindle(s)are worn out	Inspect and replace rocker arms set along with spindle(s).	Max clearance 0.134mm
	Excessive wear-out of Camshaft journals	Camshaft journal is partially seized OR scored	Inspect and replace cylinder head.	
	Cam chain is making noise	Cam chain/cam chain pads/cam shaft sprocket is worn-out	Inspect cam shaft sprocket, cam chain, chain pads, cam chain tensioner and replace affected parts.	
	Valve springs are damaged	Valve springs are loose OR broken	Inspect valve springs and replace full set.	

Symptom	Possible Cause	Diagnosis	How to Fix	Spec. Limit
Engine Noise Top End	Valve stem to valve guide clearance is excess	Valve stem guides are worn out excessively	Inspect valve stem guide. If the clearance is out of specs; replace the head assembly.	Max clearance 0.66mm
	Valve stem(s)is partially seized (sticky) in valve guide(s)	Inspect valve stem and guides for free movement in valve guide(s)	If the movement is not as per specs, replace the valve stem and guide.	
	Valve seat insert is loose in cylinder head	Inspect valve seat inserts for damages	Dismantle cylinder head & valves and replace.	

Symptom	Possible Cause	Diagnosis	How to Fix	Spec. Limit
Engine Noise Middle	Cam chain tensioner is defective	Cam chain tensioner spring/cam chain pad are worn-out OR broken	Replace cam chain tensioner pad assembly.	
	Piston rings are stuck in piston groove	Wet/excessive carbon is build up in the ring grooves in piston/on rings	Release piston ring(s) carefully from piston ring groove(s), clean and replace with new rings.	
	Piston rings are worn out	Excessive gap in piston rings at the end in cylinder barrel	Inspect piston rings and cylinder barrel for excessive wear out. Replace piston rings/ piston with rings. Replace cylinder barrel assembly if cylinder barrel is worn out.	Top ring 1: 0.300mm Top ring 2: 0.400mm
	Excessive clearance between Piston and barrel	Inspect Piston to Barrel clearance for given specs	Replace entire set of cylinder piston and barrel assembly.	Max dia of piston working area in cylinder: 78.030mm Piston min dia: 77.940mm
	Connecting rod small end to piston pin clearance is excess	Remove and inspect if the piston pin is loose OR scored OR seized	Replace the piston pin AND/OR connecting rod as required.	
	Connecting rod is bent	Remove and inspect valve timing; check if valve is stuck OR damaged and if the connecting rod is bent OR twisted	Replace the connecting rod AND/OR stem valve and affected parts.	

Symptom	Possible Cause	Diagnosis	How to Fix	Spec. Limit
Engine Noise Bottom	Crankshaft journal bearing is worn-out/ partially seized	Remove and inspect the bearing code and crankshaft. Check for scores OR seizures	Refer the crank shaft journal bearing code selection chart. Check the oil gallery. Replace the journal bearings and crankshaft if required.	
	Connecting rod big end journal bearing is worn-out/partially seized	Remove and inspect oil circulation and the connecting rod bigger end bearing	Refer the connecting rod bearing code selection chart. Check and replace the connecting rod big end bearing.	
	Balancer shaft journal bearing is worn-out/ partially seized	Remove and inspect the balancer shaft and journal bearing	Refer balancer shaft bearing code selection chart. Check and replace the balancer shaft bearing and replace if defective.	
	Clutch slipper spring is deformed OR broken	Remove and inspect clutch slipper spring for breakage	Replace the clutch slipper spring if worn-out.	
	Clutch outer hub collar bush/ needle bearing is defective	Remove and inspect if the clutch outer hub collar bush/needle bearing is worn out	Replace the affected parts.	
	Clutch friction plate lugs/clutch outer hub slots are defective	Remove and inspect if clutch friction plate lugs/clutch outer hub slots are worn-out OR damaged	Check and replace the friction plates and affected parts.	
	Drive shaft bearing is worn out	Remove and inspect for noisy drive shaft bearing OR excess play	Check and replace the bearing/drive shaft assembly.	

Symptom	Possible Cause	Diagnosis	How to Fix	Spec. Limit
Engine Noise Bottom	Drive shaft bush is worn out	Remove and inspect for drive shaft bush wear-out OR excess play	Check and replace the bush and shaft if worn out.	
	Counter shaft bearing is worn out	Remove and inspect for the noisy counter shaft bearing	Check and replace the counter shaft bearing and shaft if worn out.	
	Counter shaft bush is worn out	Remove and inspect counter shaft bush for any wear-out OR excess play	Check and replace the counter shaft bush and shaft if worn out.	
	Excessive clearance between splines and gears	Remove and inspect splines and gears for any wear-out OR excess play	Check and replace the gear splines and gears.	

Symptom	Possible Cause	Diagnosis	How to Fix	Spec. Limit
Engine Vibration	Engine mounting fasteners to main/cradle frame are loose	Check all mounting fasteners for looseness/stripped OR washed out threads/ broken mountings/ fasteners	Ensure engine mounting fasteners are tightened at specified torque to the main/cradle frame. Check the mounting for any cracks OR damages. Check if the adjuster and bush are as per specifications.	
	Engine steady bracket is loose	Check fasteners for looseness/stripped/ washed out threads/ broken mountings/ fasteners	Ensure engine steady bracket mounting is free of cracks. Ensure that fasteners are tightened to main frame to the specified torque.	
	Silencer mounting is loose	Inspect silencer (LH/ RH) mountings, mounting cub washers and brackets for cracks OR loose ends. Inspect if tightening torque with cylinder head and silencer pipe brackets to frame torque is as per specs	Ensure silencer (LH/ RH) mountings points, mounting cub washers and brackets are free of cracks OR loose ends. Tighten all mounting fasteners to specified torque. Ensure exhaust pipe mounting flange nuts are correctly tightened to cylinder head.	
	Foot pegs are loose	Check foot peg mounting fasteners for looseness/stripping/ washed out threads/ broken fasteners	Tighten foot pegs to specified torque and replace defective parts.	
	Balancer shaft/ crankshaft run-out	Dismantle engine and check balancer shaft for any run out/ bearings damage	Replace affected bearings/ balancer shaft.	

Symptom	Possible Cause	Diagnosis	How to Fix	Spec. Limit
Clutch is Spongy/Soft	Clutch inner cable is partially damaged	Inspect clutch cable top & bottom ends for damaged inner cable	Replace Clutch cable.	
	Clutch has excess free play	Clutch cable free play is more than specs at handle bar end	Adjust clutch free play to 2-3mm.	2-3 mm
	Engine oil has lost viscosity	Check if engine oil is contaminated and too thin	Drain oil, replace oil filter and fill fresh engine oil as per Royal Enfield recommendation.	Replace every 10000 km / 6000 miles / 12 months.
	Clutch activating lever assembly is loose on clutch shaft	Check if clutch lever clamping bolts are loose	Tighten clamping bolt on clutch lever as per specs.	
		Inspect splines on clutch shaft and lever for splines damage/ worn out	Replace clutch lever and shaft.	
	Clutch springs are weak	Inspect clutch release springs for pre-setting/length reduction	Inspect clutch springs for correct free length and replace if out of specs.	
	Clutch springs are broken	Inspect clutch springs for any damages	Replace clutch springs.	
	Clutch friction plates have become soggy	Inspect clutch friction plate material for softness/damages/ puffed up condition	Replace clutch friction plate/steel plates.	
	Clutch center/ hub is worn out	Inspect clutch center and hub splines area for damages/wear out	Replace clutch assembly.	
	Clutch assembly center nut is loose	Inspect if clutch center fixing nut is loose/ threads are washed out	Replace nut/main shaft.	

Symptom	Possible Cause	Diagnosis	How to Fix	Spec. Limit
Clutch is Hard	Clutch inner cable is stuck/ has hard movement in outer cable	Inspect inner clutch cable for free movement in outer cable	Lubricate clutch cable and inspect for free movement. If problem still exists, replace clutch cable.	
	No free play in clutch lever at handle bar end	Clutch cable free play is less than specs	Adjust clutch free play to 2-3mm.	2-3 mm
	Engine is contaminated	Engine oil is not changed as per recommended maintenance schedule OR Engine oil is NOT as per Royal Enfield recommendation	Drain oil, replace oil filter and fill fresh engine oil as per Royal Enfield recommendation.	Replace every 10000 km / 6000 miles / 12 months.
	Excess Oil in Engine	Engine oil is filled excessively	Drain and refill oil to correct specifications.	
	Clutch lever movement is sticky in cover RH	Check free movement of clutch shaft in cover RH	Remove clutch shaft from cover RH, inspect, lubricate and reassemble.	
		Check if clutch shaft is seized in cover RH	Replace clutch shaft in cover RH.	

Symptom	Possible Cause	Diagnosis	How to Fix	Spec. Limit
Clutch Slip	Clutch has excess free play	Inspect clutch cable top & bottom ends for frayed strands of the inner cable	Replace clutch cab;e if damaged. Adjust clutch free play to 2-3mm.	2-3 mm
	Clutch lever movement is sticky in cover RH	Check free movement of clutch shaft in cover RH	Remove clutch shaft from cover RH, inspect, lubricate and reassemble.	
		Check if clutch shaft is seized in cover RH	Replace clutch shaft in cover RH.	
	Clutch springs are weak	Inspect clutch release springs for presetting/ length reduction	Replace if out of specs.	
	Clutch springs are broken	Inspect clutch springs for any damages	Replace clutch springs.	
	Clutch friction plates have become soggy	Inspect clutch friction plate material for softness/damages/ puffed up condition	Replace clutch friction plate/steel plates.	
	Clutch center/ hub is worn out	Inspect clutch center and hub spline area for damages/wear out	Replace clutch assembly.	
	Clutch assembly center nut is loose	Inspect if clutch center fixing nut is loose/ threads are washed out	Replace nut/main shaft.	

Symptom	Possible Cause	Diagnosis	How to Fix	Spec. Limit
Clutch juddering	Clutch cable is brittle	Inspect clutch cable top & bottom ends for frayed strands of the inner cable	Replace clutch cable.	
	Clutch lever movement is sticky in cover RH	Check free movement of clutch shaft in cover RH	Remove clutch shaft from cover RH, inspect, lubricate and reassemble.	
		Check if clutch shaft is seized in cover RH	Replace clutch shaft in cover RH.	
	Uneven wear of clutch friction plates	Friction plates OR steel plates are worn-out, warped OR dragging	Remove clutch friction and steel plates. Inspect, lubricate and reassemble. Replace if necessary.	
	Clutch steel plate movement on clutch hub is abrupt			
	Clutch steel plate warped	Check if steel plate is warped OR worn-out	Remove clutch steel plates, inspect, lubricate and reassemble. Replace if necessary.	
	Clutch judder spring is broken	Inspect clutch judder springs for damage	Replace clutch judder springs.	
	Clutch release spring is sticky	Inspect if the clutch release spring is not releasing properly	Remove, inspect and replace.	
Noise in Clutch	Clutch Spring is broken	Inspect if the clutch is also broken	Replace the spring and clutch if required.	
	Clutch outer hub collar bush/ needle bearing is worn-out	Inspect if Clutch outer hub collar bush/needle bearing for damages	Replace hub collar bush AND/OR needle bearing.	
	Clutch friction plate lugs/clutch outer hub slots are worn out	Inspect clutch friction plate and outer hub for damages	Replace Clutch friction plate lugs AND/OR clutch outer hub.	

Symptom	Possible Cause	Diagnosis	How to Fix	Spec. Limit
Down-Shift/Up-Shift Travel Is Excessive	Gear link is defective	Inspect if the gear link is worn out	Remove, lubricate link and reassemble. Replace if necessary.	
	Gear link adjustment is incorrect	Inspect if gear lever link adjustment is to the specs	Adjust the gear lever link to the specs. Replace if required.	
Gear is Hard to Shift	Gear shift stopper is defective	Inspect gear shift stopper roller for wear-out/damage	Remove and lubricate shifter and reassemble. Replace if necessary.	
	Gear shift stopper spring is defective	Inspect gear shift spring for preset/ breakage	Replace the spring.	
Gear is Under Engaging	Gear link adjustment is incorrect	Inspect if gear lever link adjustment is to the specs	Adjust the gear lever link to the specs. Replace if required.	
	Gear shift stopper movement is sticky	Remove and inspect shift stopper and pin for damage OR wear-out	Replace the shift stopper AND/OR pin.	
	Shifter fork movement is sticky	Inspect if shifter fork has sticky movement in spindle/selector drum	Replace the shifter fork.	

Symptom	Possible Cause	Diagnosis	How to Fix	Spec. Limit
Gear Engagement is Hard	Oil level is low/ engine oil has lost viscosity	Engine oil is contaminated and too thin	Drain oil, replace oil filter and fill fresh engine oil as per Royal Enfield recommendation.	
	Excessive clutch free play	Clutch cable free play is more than specs at handle bar end	Adjust free play and replace clutch cable if necessary.	
	Gear shaft is bent	Inspect if the gear shaft is sticky OR bent	Replace gear shaft.	
	Shifter fork movement and selector drum are sticky	Inspect shifter fork free movement in selector drum	Replace the selector drum.	
	Sliding gear movement on counter-shaft/ drive shaft is sticky	Inspect if gear sliding is sticky	Replace sliding gears on counter shaft and drive shaft.	
	Gear shift stopper movement is sticky	Inspect if shifter fork stopper is worn-out	Remove, lubricate and reassemble shifter fork. Replace if necessary.	
	Gear shift shaft is bent/stuck	Remove and inspect shaft run-out	Replace gear shaft.	
Gear Engages and Slips	Gear shift stopper is worn-out	Inspect gear shift stopper	Remove, lubricate shifter and reassemble. Replace if necessary.	
	Gear shift stopper spring is broken	Inspect gear shift spring for preset/ breakage	Check and Replace the spring.	
	Gear link adjustment is incorrect	Inspect if gear lever link adjustment is to the specs	Adjust the gear lever link to the specs. Replace if required.	
	Sliding gear dogs are worn-out	Inspect sliding gear dogs	Remove and replace if necessary.	

Symptom	Possible Cause	Diagnosis	How to Fix	Spec. Limit
Gear is not Engaging	Engine oil has lost viscosity	Engine oil is contaminated and too thin	Drain oil, replace oil filter and fill fresh engine oil as per Royal Enfield recommendation.	
	Gear teeth are broken	Inspect gear teeth	Remove, inspect and replace gear and affected parts.	
	Gear shift stopper is jammed	Inspect the movement of the stopper	Remove, inspect and replace the stopper id necessary.	
	Selector fork is jammed on spindle	Remove and check the fork in the drum	Check, lubricate and reassemble OR replace if required.	
	Selector fork is jammed in selector drum	Check for free traveling of the fork in the selector drum	Replace the drum and affected parts.	
	Gear shift shaft is bent/stuck	Dismantle and check the run-out	Replace the gear selector shaft.	
Gear Lever is not Returning After Shifting	Gear shift shaft spring is broken	Check operation of gear selector shaft spring AND/OR lock	Remove and replace the spring.	
	Gear shift shaft is bent/stuck	Inspect gear shift shaft guide movement	Replace gear shift shaft and affected parts.	

Symptom	Possible Cause	Diagnosis	How to Fix	Spec. Limit
Noise in Gear Box	Engine oil has lost viscosity	Engine oil is contaminated and too thin	Drain oil, replace oil filter and fill fresh engine oil as per Royal Enfield recommendation.	
	Gear teeth are broken	Inspect gear teeth	Remove, inspect and replace gear and affected parts.	
	Drive shaft bearing is worn-out	Check the bearing sound and wear-out	Dismantle, inspect the drive shaft bearing and replace.	
	Drive shaft bush is worn out	Check the bush play and seating	Remove, inspect and replace drive shaft push.	
	Counter shaft bearing is worn out	Check if the counter shaft bearing has excess play	Remove, inspect and replace counter shaft bearing and shaft if required.	
	Counter shaft bush is worn out	Check if the counter shaft bush is worn-out OR has excess play	Remove, inspect and replace counter shaft bush and shaft if required.	
	Excessive clearance between splines and gears	Check if clearance is as per specifications	Remove, inspect and replace the affected parts.	

AIR FILTER BOX ASSEMBLY

CONTENTS **PAGE**

6.1 Air Filter Box Assembly 339

Dismantling 339

6.1.1 Air Filter Element 339

6.1.2 Air Filter Box Assembly 339

Inspection 341

Assembly 342

6.1.3. Air Filter Box Assembly 342

6.1.4 Air Filter Element 344

Troubleshooting 346

6.1 Air Filter Box Assembly

Dismantling

6.1.1 Air Filter Element

⚠ CAUTION
Ensure the motorcycle is upright on a firm and flat surface.

- Ensure ignition switch and engine stop switch are in OFF position.
- Remove the following parts:
  - Remove side panel RH and LH (Refer_____).
  - Disconnect battery terminal (Refer_____).
  - Remove the seat (Refer_____).
- Gently support air filter element cover and loosen and remove **3Nos** pan head screws **(a)** from air filter box assembly.

NOTE
• *DO NOT tap or apply excessive force on the screws.*

- Remove air filter element cover **(b)** from air filter box assembly.

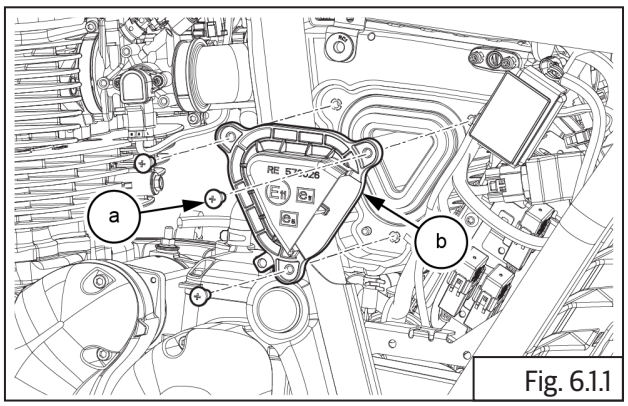

Fig. 6.1.1

	Screw driver (+)

- Gently pull out air filter element **(a)** from air filter box assembly.

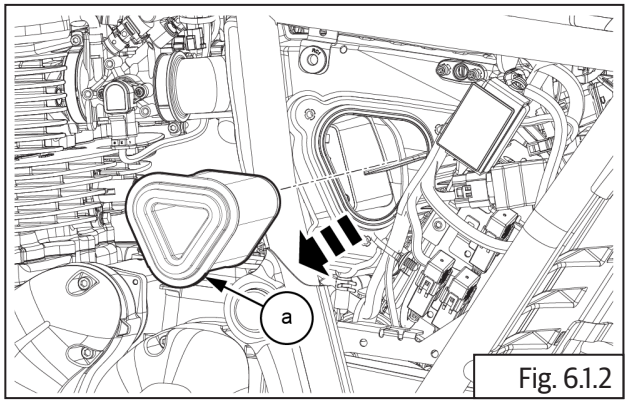

Fig. 6.1.2

6.1.2 Air Filter Box Assembly

- Ensure ignition switch and engine stop switch are in OFF position.
- Remove the following parts:
  - Remove side panel RH and LH(Refer_____).
  - Remove the seat (Refer_____)

  Disconnect battery terminal (Refer_____)
  - Remove the Fuel tank (Refer_____).
  - Remove utility box from frame RH. (Refer_____).
  - Remove Battery tray (Refer_____).
  - Disconnect ECU wiring coupler and remove ECU (Refer_____).
  - Remove the throttle body cover (Refer_____).
  - Rear wheel assembly (Refer_____).
  - Rear mudguard infill cover (Refer_____).

- Disconnect intake air temperature sensor wiring coupler **(a)**.

⚠ CAUTION

Be careful while connecting and disconnecting the electrical couplers. Do not damage the coupler pins.

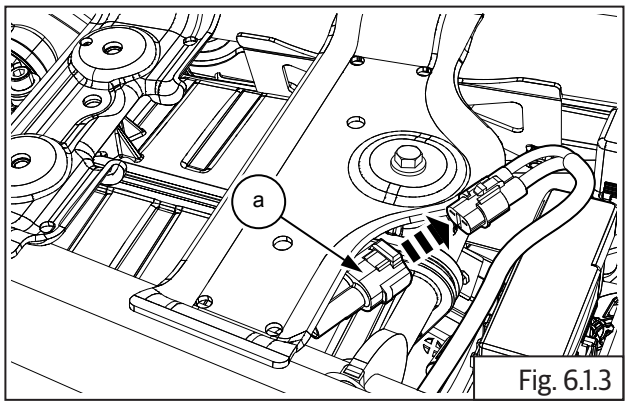

Fig. 6.1.3

- Support intake air temperature (IAT) sensor, loosen and remove **2Nos** Hex socket head bolts **(M5) (a)** holding intake air temperature (IAT) sensor to air filter box assembly on the LH side.

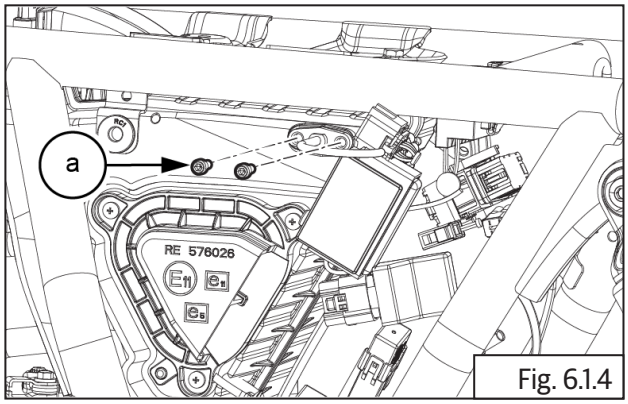

Fig. 6.1.4

	4 mm Allen Socket with Ratchet

- Gently pull out intake air temperature sensor **(a)** from air filter box assembly.

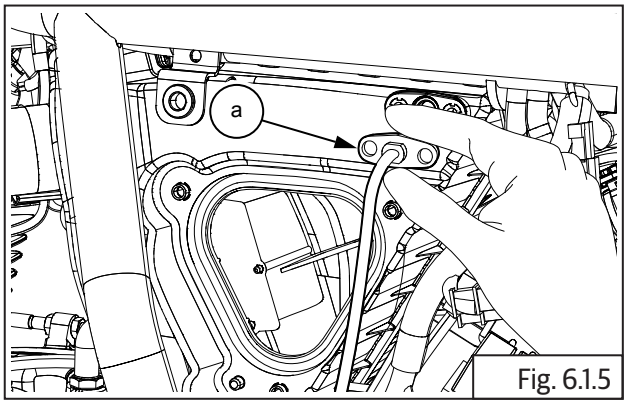

Fig. 6.1.5

- Release clip **(a)** and disconnect breather hose **(b)** from air filter box assembly.

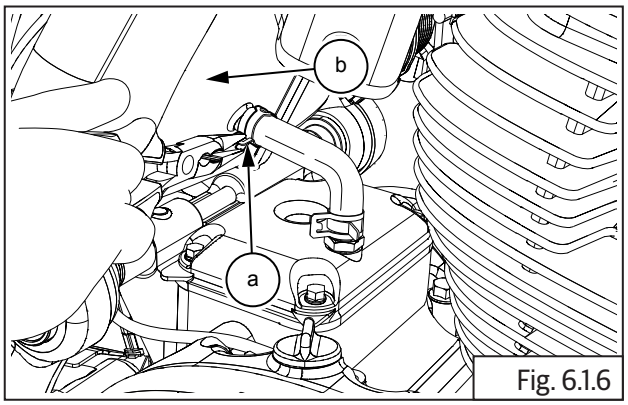

Fig. 6.1.6

	Nose plier

- Loosen **2Nos** Hex socket pan head screws **(M5) (a)** sufficiently on the worm clips **(b)** on the LH and RH bellows between throttle body **(c)** and air filter box assembly.

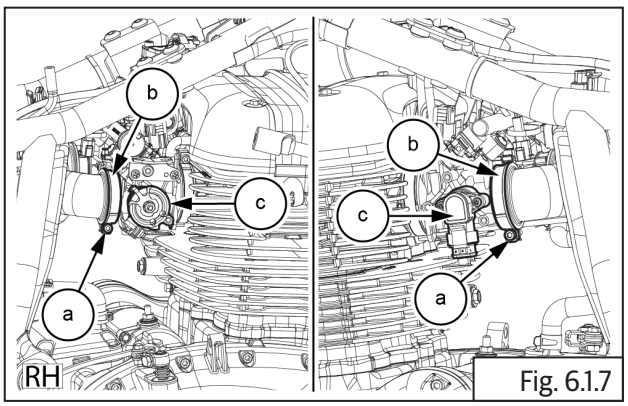

Fig. 6.1.7

	4 mm Allen Socket with Ratchet

- Disconnect idle air control (IAC) hose **(a)** from throttle body **(b)**.

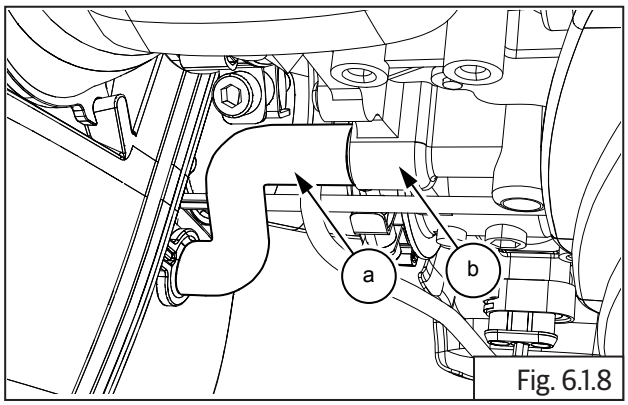

Fig. 6.1.8

- Loosen and remove **2Nos** pan head screws **(a)** on air filter box assembly RH side and remove clamps **(b)** provided for routing of the brake hoses and wiring harness.

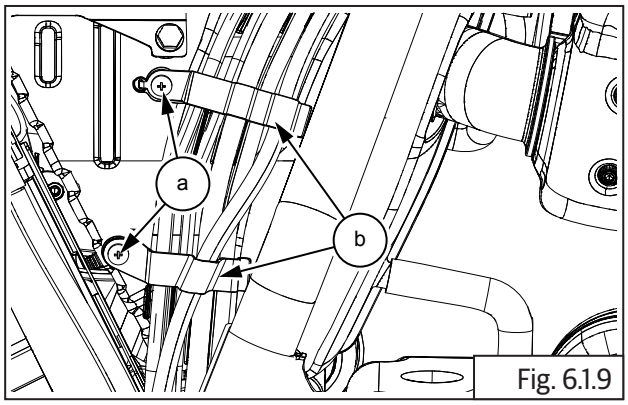

Fig. 6.1.9

	Screw driver (+)

- Loosen and remove **2Nos** Hex flange head bolts **(M6) (a)** from the frame above the top of air filter box assembly **(b)**.

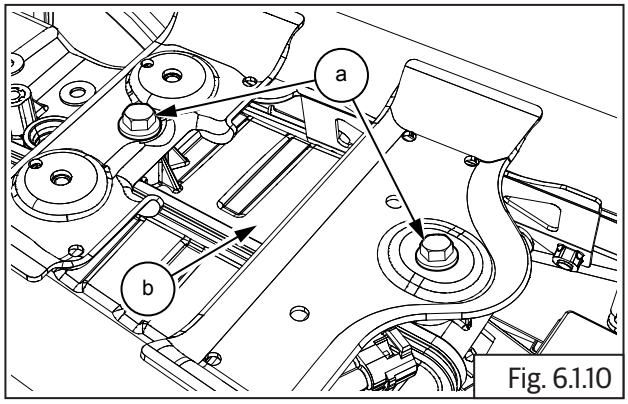

Fig. 6.1.10

	10 mm Socket with Ratchet

- Ensure worm clips on inlet bellows are sufficiently loose and bellows are not stuck on throttle body.
- Gently remove air filter box assembly **(a)** from frame by pulling to the rear to release the bellows from the throttle body.

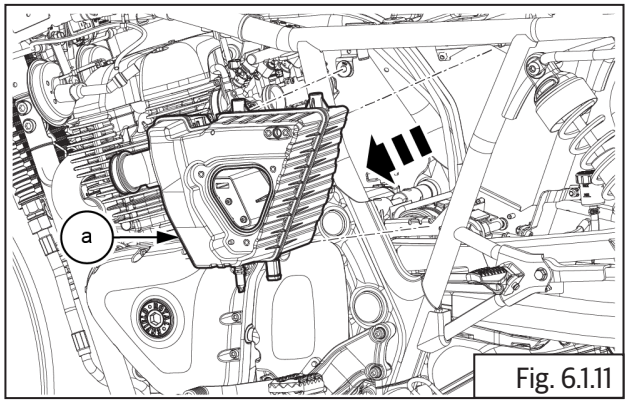

Fig. 6.1.11

Inspection

- Inspect air filter box assembly for any damages or cracks.
- Inspect air intake bellows for any damages, cracks and/or brittleness of the bellows.
- Inspect rubber seals, hoses for cuts, cracks or damages. Replace seals and rubber parts whenever they are removed.

- Inspect air filter element carefully for any deformation, damages, heavy clogging with dirt, soggy condition, and/or foreign particles embedded in the element. Replace if any of these conditions are observed.

Clean

- Clean air filter element **(a)** and later based on the peroidic maintenance schedule OR more frequently if motorcycle is used in dusty/off-road conditions.
- Gently tap filter element with minimum force to dislodge heavy/embedded dust particles.
- Using low pressure compressed air, blow air from out side to inner side to remove fine dust particles.

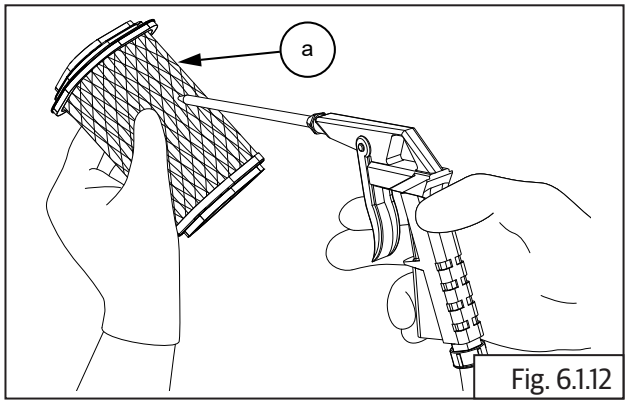

Fig. 6.1.12

	Air gun

⚠ CAUTION

DO NOT wash the element in water, gasoline or any solvents.

- Clean the air filter housing internals, with a soft damp cloth to remove dust.

Replace

- Replace all O-rings, rubber beadings, seals, gaskets, rubber parts etc., Whenever air filter assembly is serviced.
- Replace air filter element (Refer PMS chapter for replacement interval) or earlier if motorcycle is used in dusty/off road conditions.

Assembly

6.1.3. Air Filter Box Assembly

- Ensure worm clips on inlet bellows are sufficiently loose and correctly located in groove of bellows.
- Locate air filter box assembly **(a)** in frame from the rear, duly ensuring bellows are aligned correctly to throttle body.

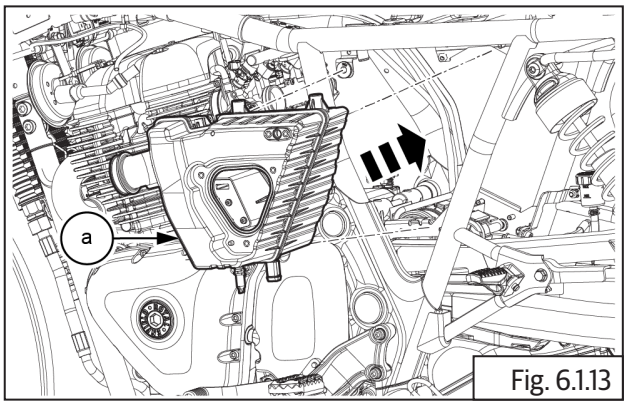

Fig. 6.1.13

- Locate bellows LH and RH on throttle body and ensure they are seated fully on throttle body.
- Align top mounting holes of air filter box assembly with mounting holes in frame.
- Tighten air filter box assembly **(b)** to frame using **2 Nos** Hex flange head bolts **(M6) (a)**.

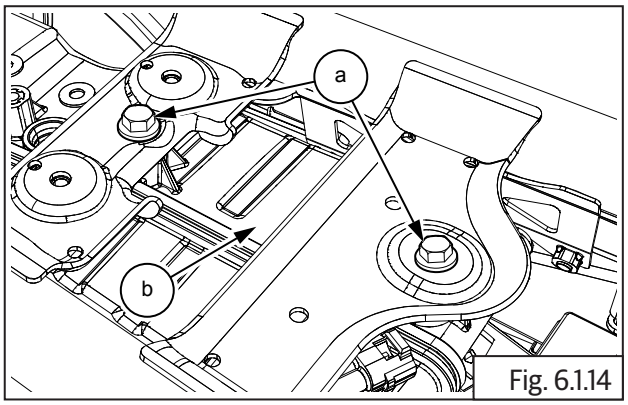

Fig. 6.1.14

	10 mm Socket with Ratchet
	9-12 Nm / 0.9 - 1.2 kgf-m

- Position worm clips correctly and tighten pan head screws **(M5) (a)** on LH and RH bellows **(b)** firmly such that clips do not rotate and bellows are tight on throttle body **(c)**.

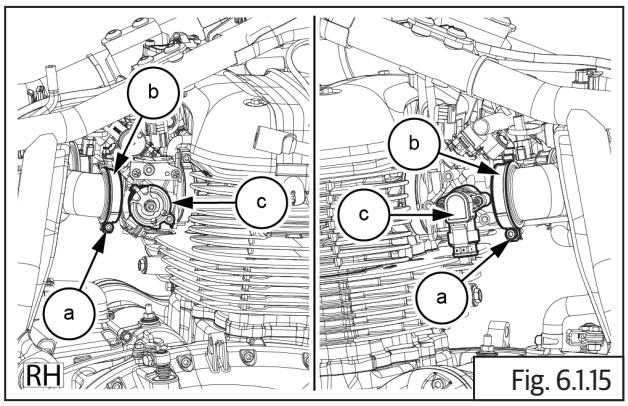

Fig. 6.1.15

	4 mm Allen Socket with Ratchet
	2-4 Nm / 0.2 - 0.4 kgf-m

- Position upper clamp **(a)** correctly against air filter box assembly on RH side, duly ensuring mounting holes are aligned. Ensure the brake hoses and EVAP hose are correctly located inside clamp.
- Locate pan head screw **(b)** on mounting hole of clamp and tighten clamp to air filter housing.

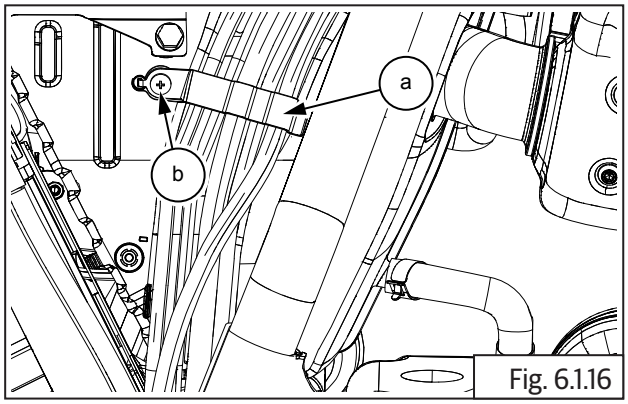

Fig. 6.1.16

	Screw driver (+)
	4-6 Nm / 0.4 - 0.6 kgf-m

- Position lower clamp **(a)** correctly against air filter box assembly on RH side, duly ensuring mounting holes are aligned. Ensure brake hoses and wiring harness are correctly located inside clamp.
- Locate pan head screw **(b)** on mounting hole of clamp and tighten clamp to air filter housing.

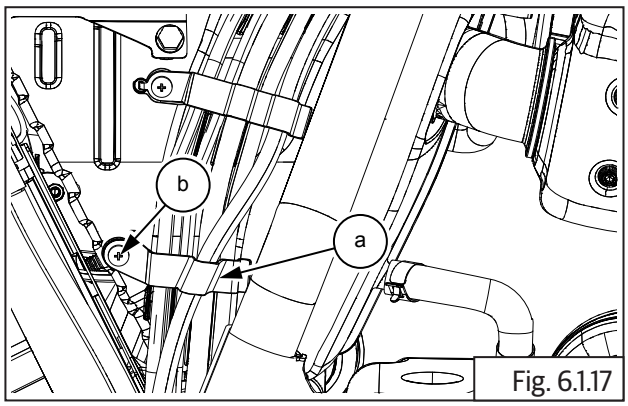

Fig. 6.1.17

	Screw driver (+)
	4-6 Nm / 0.4 - 0.6 kgf-m

- Connect idle air control (IAC) hose **(a)** from air filter box assembly into throttle body **(b)**.

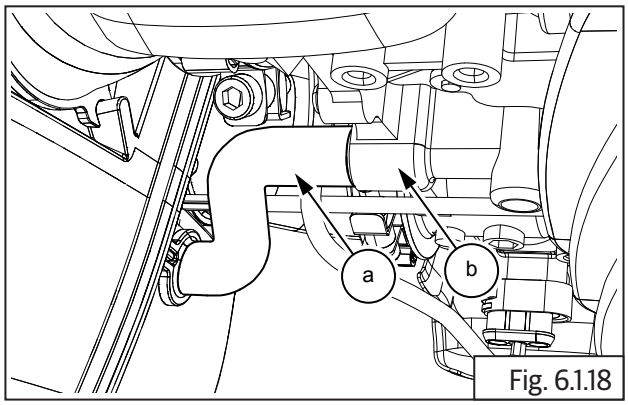

Fig. 6.1.18

- Ensure hose clip **(a)** is located on breather hose and connect breather hose to air filter box assembly **(b)**.

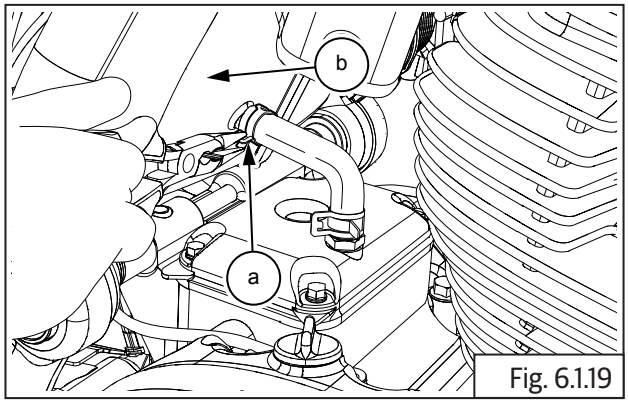

Fig. 6.1.19

	Nose plier

- Position (IAT) sensor into air filter box assembly LH side correctly and tighten with **2 Nos** Hex socket head bolts **(M5) (a)**.

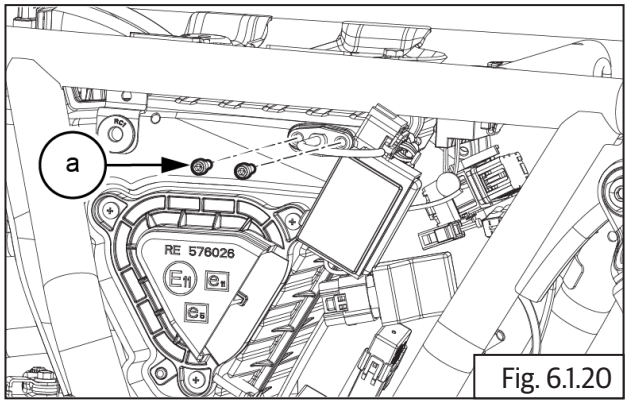

Fig. 6.1.20

	4 mm Allen Socket with Ratchet
	2-4 Nm / 0.2 - 0.4 kgf-m

- Connect wiring coupler to (IAT) sensor **(a)**.

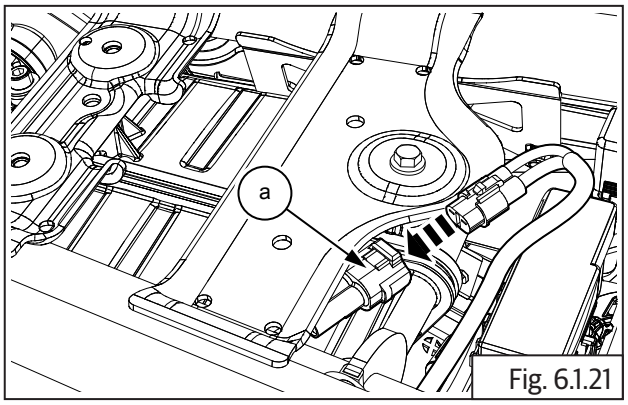

Fig. 6.1.21

- Assemble the following parts:
  - Assemble the Battery tray (Refer_____).
  - Assemble the Rear mudguard infill cover (Refer_____).
  - Assemble the Rear wheel (Refer_____).
  - Assemble the throttle body cover (Refer_____).
  - Connect ECU and wiring coupler (Refer_____).
  - Install the utility box from frame RH. (Refer_____).
  - Assemble the Fuel tank (Refer_____).
  - Assemble the seat (Refer_____).
  - Connect battery terminal (Refer_____).
  - Assemble the side panel RH and LH (Refer_____).

6.1.4 Air Filter Element

- The filter element **(a)** has one end open and the other end closed. Insert closed end of filter element into air filter box assembly correctly such that open end is facing outside.

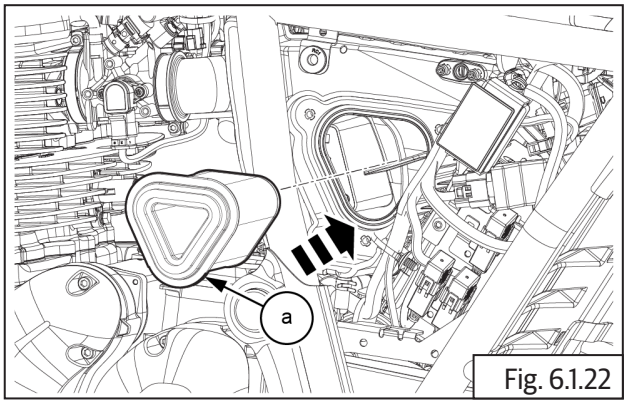

Fig. 6.1.22

- Ensure proper seating of cover **(b)** and tighten cover to air filter box assembly evenly and firmly with **3 Nos**. Pan head screws **(a)**.

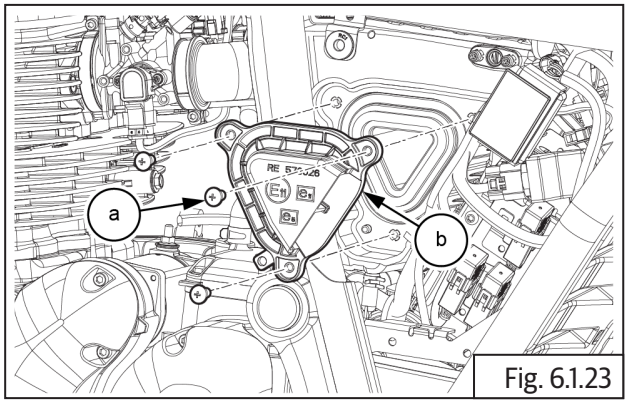

Fig. 6.1.23

	Screw driver (+)
	1.8 Nm / 0.18 kgf-m

⚠ CAUTION

Do not over tighten the screws or use excessive force as it will damage the cover and the air filter box assembly.

- Assemble the following parts:
  - Assemble the seat (Refer_____).
  - Connect battery terminal (Refer_____).
  - Assemble the side panel RH and LH (Refer_____).

Troubleshooting

Symptom	Possible Cause	Diagnosis	How to Fix	Recommended Specification
Air induction noise from air filter box is high	Air filter element cover not sealing properly on air filter box assembly	Air filter element cover not seated properly on air filter box assembly/improperly tightened	Check proper seating of the air filter element cover on air filter box assembly	
	Air filter element cover cracked	Air filter element cover cracked due to improper assembly/over tightening	Replace air filter Element cover assembly	
	Air filter box assembly cracked/damaged	Air filter box assembly not aligned properly and tightened/damaged due to stone hit	Replace air filter box assembly	
	Hoses connecting to inlet manifold cracked	Cracked due to age hardening/improper assembly	Replace air filter box assembly	
Engine running very sluggish and pick up poor	Filter element choked	Filter element choked with dirt/water/oil	Check and replace filter element	Refer PMS chapter for Filter element replacement interval
Engine misfiring/ running lean/idling improper	Rubber hoses connecting from air filter box assembly to ACV, IAC, throttle body, cracked/disconnected/ not sealing properly	Check and inspect each hose for no damage/cracks/ proper fitting	Check and replace hose/s, and/or air filter body as required	
	Filter element damaged	Damaged due to mishandling/heavy particles entering air filter box assembly	Check and replace filter element	
	IAT sensor not sealing properly	IAT sensor sealing gasket damaged/mounting screws loose	Check and replace IAT sensor gasket/sensor	
	ACV not sealing properly	ACV sealing gasket damaged/mounting screws loose	Check and replace ACV gasket/sensor	
Engine oil accumulation inside air filter box assembly	Excessive oil in sump	Check and maintain correct engine oil level	Clean breather chamber and hose leading to air filter box assembly	

NOTE

- *The trouble shooting given in this section is only related to issues with air filter. For complaints like sluggish running/misfiring improper idling etc., it will also be necessary to check the other aspects such as fuel, ignition, EMS, battery conditions etc., and correct.*

CONTROL CABLES

CONTENTS **PAGE**

6.2 Control Cables 350

Dismantling..... 351

6.2.1. Clutch Cable 351

6.2.2. Throttle Cable 353

Inspection 355

Assembly 356

6.2.3. Throttle Cable 356

6.2.4. Throttle Cables Free Play Adjustment 359

6.2.5. Clutch Cable 360

6.2.5.Clutch Cable Free Play Adjustment 362

Troubleshooting..... 365

Dismantling

6.2.1. Clutch Cable

Cover RH End

⚠ CAUTION

Ensure the motorcycle is upright on a firm and flat surface.

- Ensure ignition switch and engine stop switch are in OFF position.
- Disconnect battery terminal (Refer_____).
- Gently compress and release clip **(a)** holding clutch cable to frame near exhaust pipe RH.

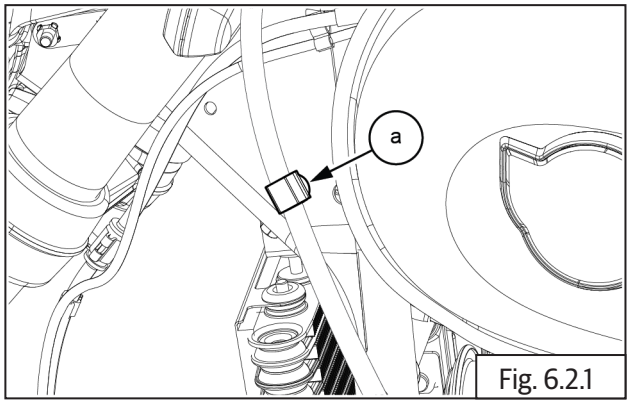

Fig. 6.2.1

- Loosen lock nut and ensure adjuster **(a)** at the handlebar end is fully turned into the bracket LH to increase cable play.

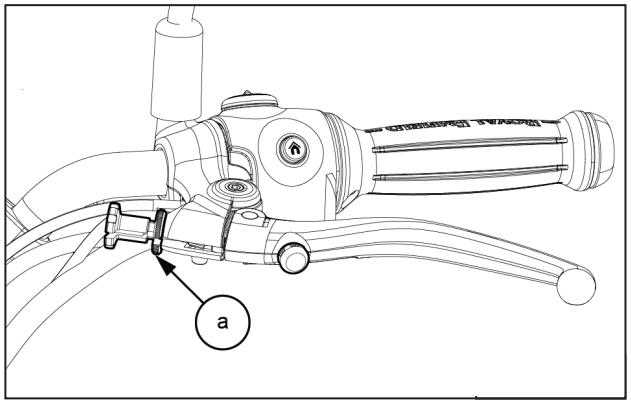

- Loosen outer locknut **(M8) (a)** completely on the clutch cable adjuster at cover RH end and push clutch cable **(b)** into cable guide in cover RH to increase the free play of the inner cable.

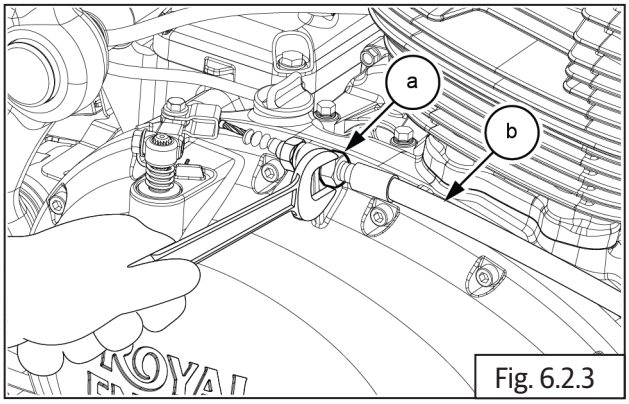

Fig. 6.2.3

	12 mm Combination Spanner

- Gently push inner cable **(a)** into clevis **(b)** in clutch shaft **(c)** and remove cable through the slot in the clevis.

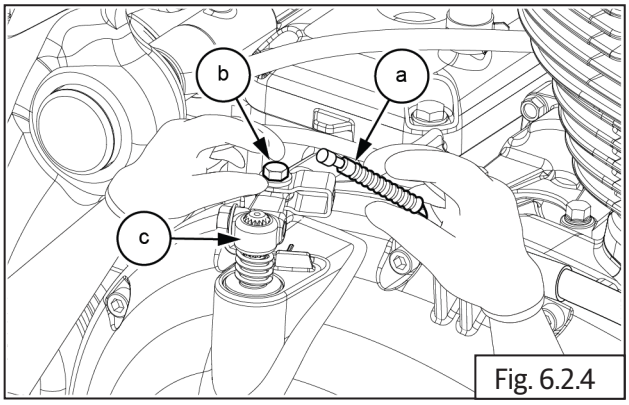

Fig. 6.2.4

- Remove protective rubber boot **(a)** from clutch cable **(b)**.

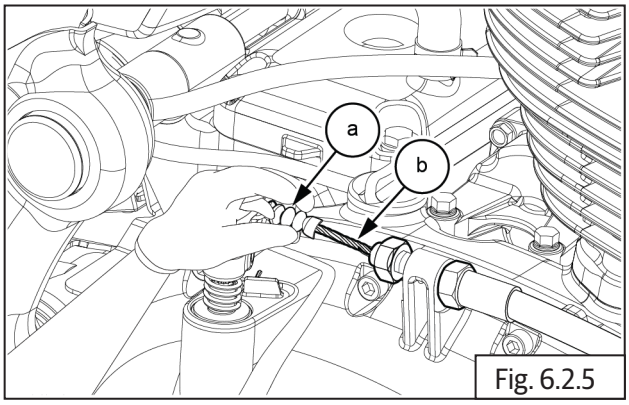

Fig. 6.2.5

- Loosen adjuster nut **(M8) (a)** completely from the clutch cable and remove.

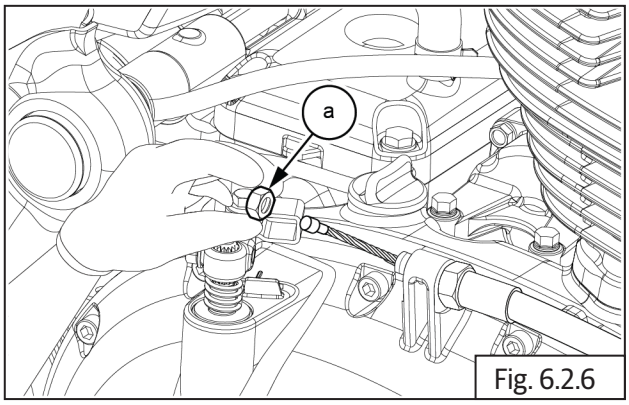

Fig. 6.2.6

- Gently pull out clutch cable assembly **(a)** from the cable guide **(b)** in cover RH assembly.

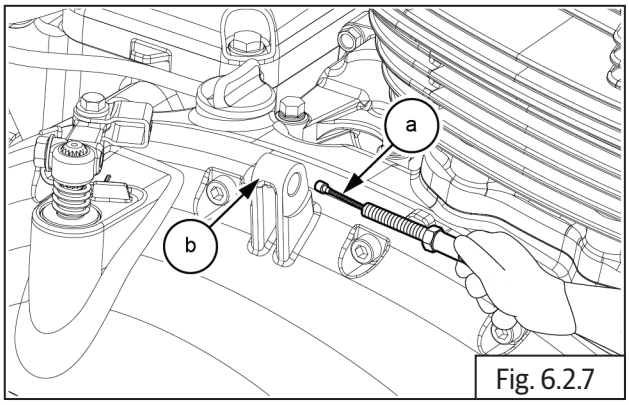

Fig. 6.2.7

Handlebar End

- Ensure the slot in the adjuster **(a)** and locknut are aligned with the slot in the clutch bracket **(b)**.

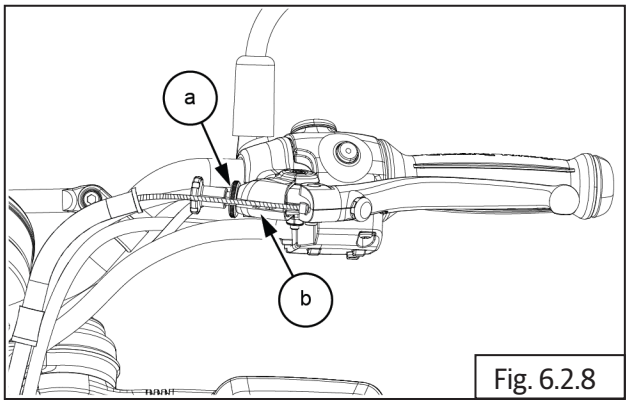

Fig. 6.2.8

- Gently pull out the outer cable **(a)** from the adjuster. Rotate and align adjuster with slot in clutch bracket and release inner cable **(b)** from lever eyelet.

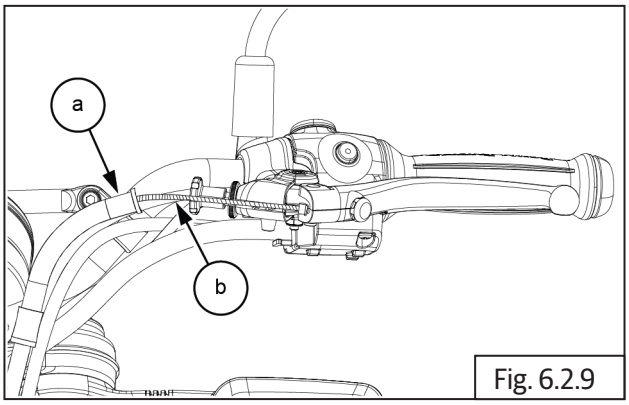

Fig. 6.2.9

- Release the cable **(b)** from wire guide **(a)**

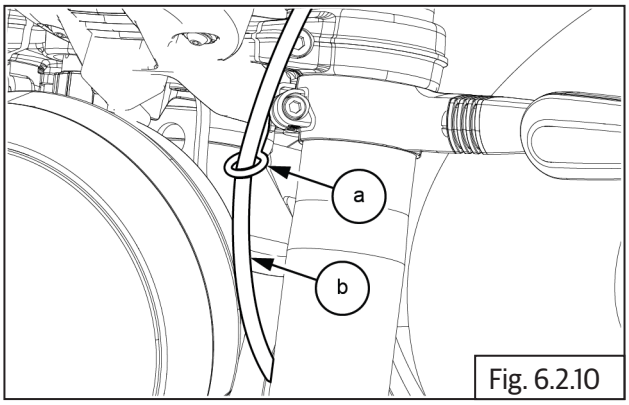

Fig. 6.2.10

- Release the cable from cradle wire guides **(a)** and **(b).**

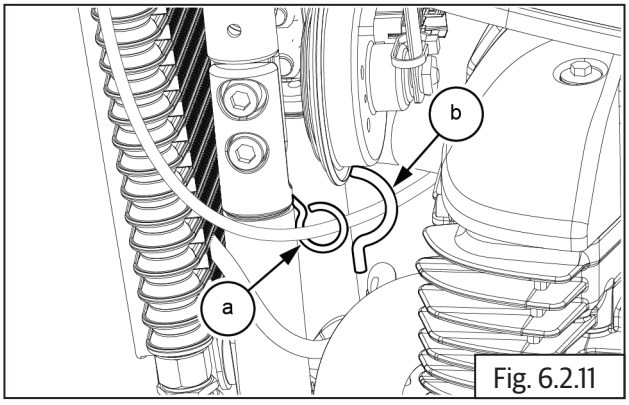

Fig. 6.2.11

- Remove clutch cable from motorcycle.

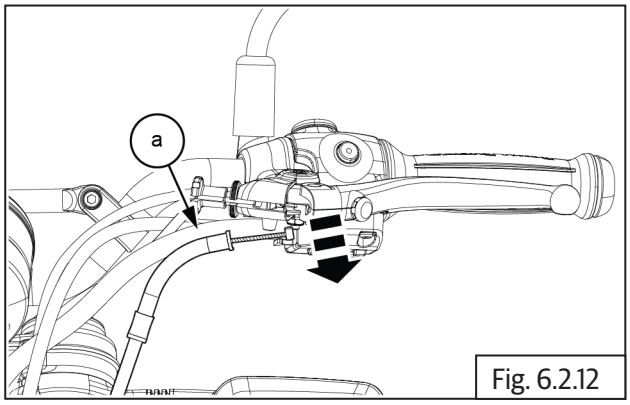

Fig. 6.2.12

NOTE
• *Please ensure the securing clips holding clutch cable to frame are released before attempting to remove clutch cable from motorcycle.*

6.2.2. Throttle Cable

Throttle Body End

⚠ **CAUTION**
Ensure the motorcycle is upright on a firm and flat surface.

- Ensure Ignition switch and Engine stop switch are in OFF position.
- Remove side panel RH .
- Disconnect battery terminal (Refer_____).
- Remove the seat (Refer_____).
- Remove the Fuel tank (Refer_____).
- Gently compress and release the omega clips 2 Nos **(a)** holding throttle cable to frame on the RH side.

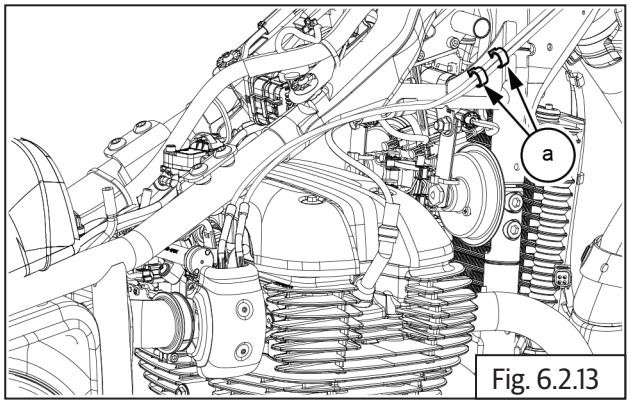

Fig. 6.2.13

- Loosen and remove 2 Nos Hex socket screws **(M5) (a)** on throttle body cover RH **(b)** and remove cover.

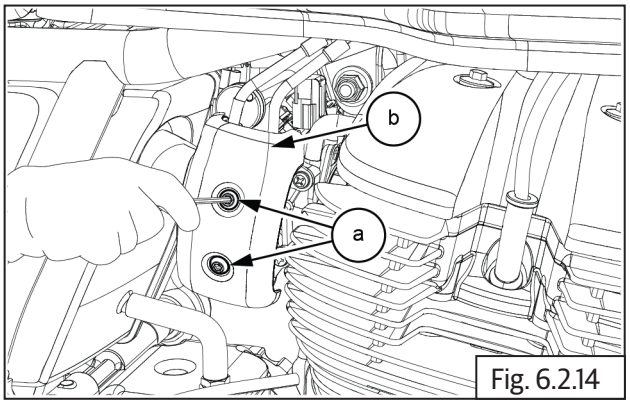

Fig. 6.2.14

	4 mm Allen socket with Ratchet

- Loosen 2 Nos Hex nuts **(M8) (a)** fully on top of throttle cable bracket **(b)** to increase inner cable **(c)** free play.

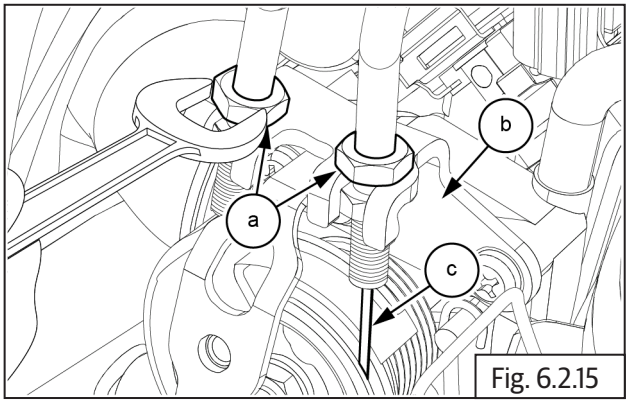

Fig. 6.2.15

	12 mm Combination Spanner

- Push cable adjusters fully into the bracket and loosen the 2 inner hex nuts on the throttle cable adjusters.
- Ensure both inner nuts are free from the adjusters and gently pull out the adjuster of the inside cable till it is out of the bracket and slide the inner cable out through the slot in the bracket.
- Repeat above process for the other throttle cable.

- Rotate inner cable **(a)** till it is aligned with the slot in the rotor **(b)** on throttle body and remove cable from the eyelet.
- Repeat above process for removing the other throttle cable.
- Remove the cables from the bracket on throttle body.

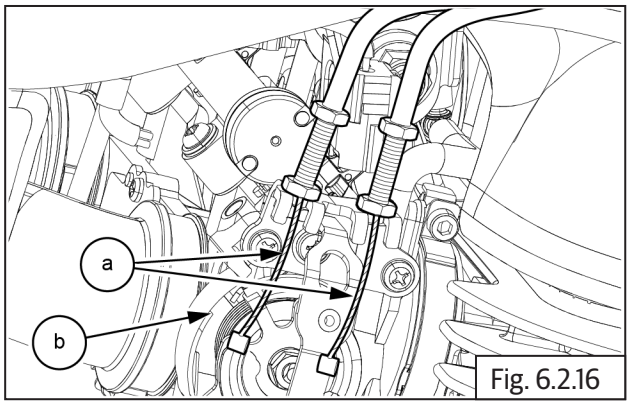

Fig. 6.2.16

Handlebar End

- Loosen and remove pan head screw **(a)** on the front cable and rotate the clip holding throttle cable to throttle rotor housing.

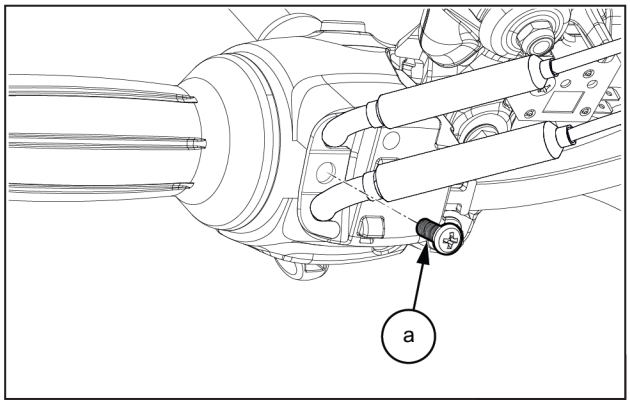

	Screw driver (+)

- Remove the stopper plate **(a)** from throttle rotor housing.

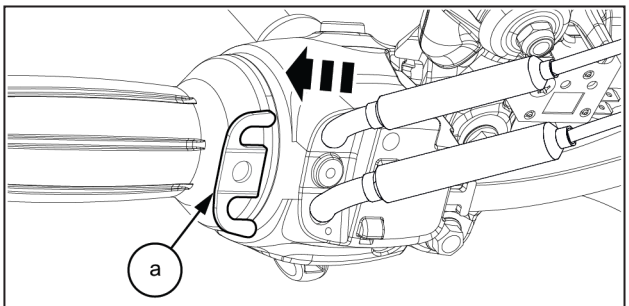

Fig. 6.2.18

- Loosen and remove 2Nos Phillips head screws **(M5) (a)** from the bottom of the throttle rotor housing and separate the halves.

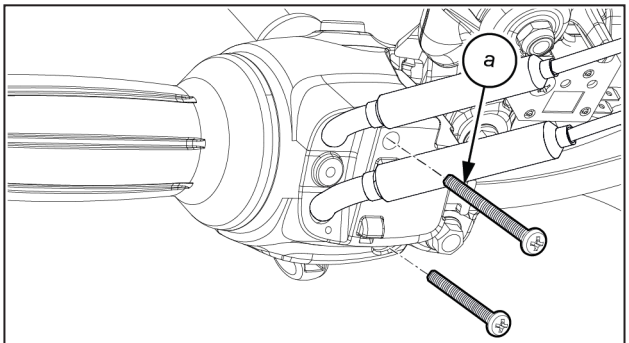

Fig. 6.2.19

	Screw driver (+)

- Gently pull up the inner cable **(a)** from the slot in the throttle rotor **(b)**, rotate and ensure it is aligned to the slot in the throttle rotor grip and remove.

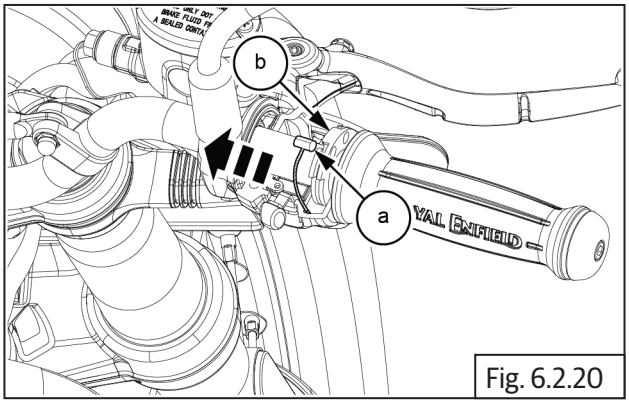

Fig. 6.2.20

- Repeat the above process to remove the other inner cable **(a)**.

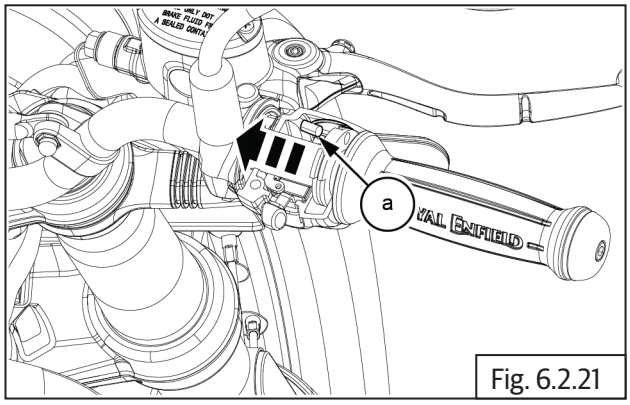

Fig. 6.2.21

- Gently remove the cables from the rotor housing bottom.
- Remove the twin cables from the motorcycle.
- Remove throttle rotor (Refer_____) .

Inspection

Cables

- Clean and inspect inner cables top and bottom ends for worn out and/or broken strands.
- Clean and inspect outer cables for brittleness, damages and/or cracks.
- Inspect the cable adjuster threads and hex nuts for any wear out and/or damage.
- Check free movement of the inner cables in the outer cables and no stickiness.
- Adjust control cables as per the recommendations in the maintenance chart.

⚠ CAUTION

DO NOT wash control cables, especially inner cables, using any solvents since it will damage the protective layer inside the control cables.

Do not lubricate inner cable by spraying any lubricants into the outer cable.

Do not roll the cables into a tight wind for storing after removal. Store them as straight as possible to avoid damage to the inner layer/ cable.

Use a soft cloth with a mild cleaning agent if necessary, to wipe off the dirt, grease or grime on the outer cables.

Clutch Lever Bracket Adjusting Screw And Clutch Lever

- Inspect the cable seating area in the adjuster on clutch lever bracket for any damages/cracks.
- Inspect the threads of the adjuster and the clutch lever bracket for any damages, threads wear out.

Throttle Rotor, Grip and Housing on Handlebar RH

- Inspect throttle rotor grip for any damages and/or cracks.
- Inspect throttle rotor for any damages/wear out.
- Inspect cable seating eyelets in the throttle rotor for any damages, wear out etc.
- Inspect the throttle rotor movement slots in the top and bottom housing for any damages/wear out.

Assembly

6.2.3. Throttle Cable

- Route both the cables **(a)** and **(b)** between the top yoke and frame head tube on the RH side under fuel tank.

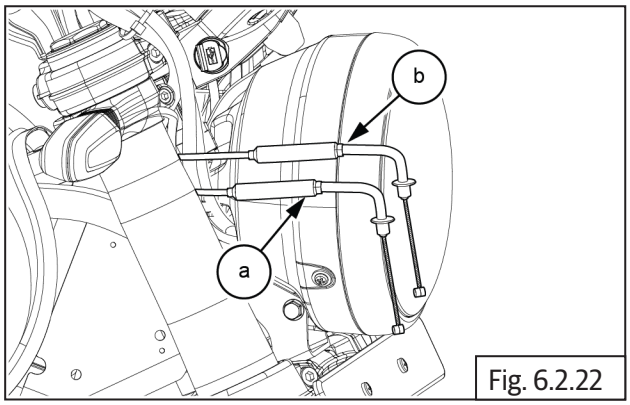

Fig. 6.2.22

- Locate cable holding 2Nos omega clips **(a)** on throttle cables and lock into the frame.

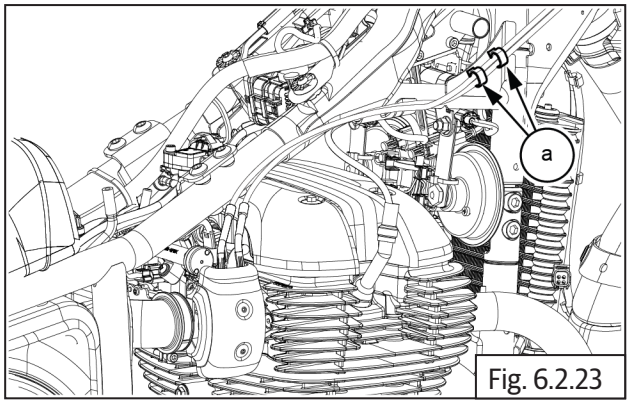

Fig. 6.2.23

Handlebar End

- Lubricate throttle rotor grip **(a)** inside with general purpose grease and assemble on handlebar RH.
- Ensure the cable slots on the rotor are facing above for correct and ease of assembly of inner cables.

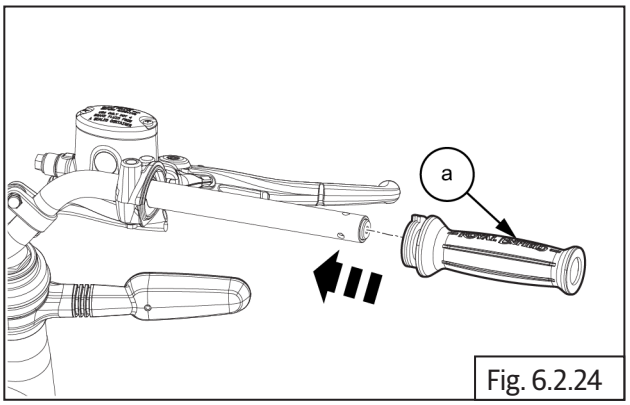

Fig. 6.2.24

- Ensure the adjusters on both cables are set at their center for finer adjustments later.
- Insert throttle cable **(a)** into the **rear** hole of the throttle rotor housing and locate inner cable in the rear eyelet on the throttle rotor **(b)** .
- Align inner cable to the slot in the rotor, rotate and ensure proper routing of the inner cable in the slot in throttle rotor.

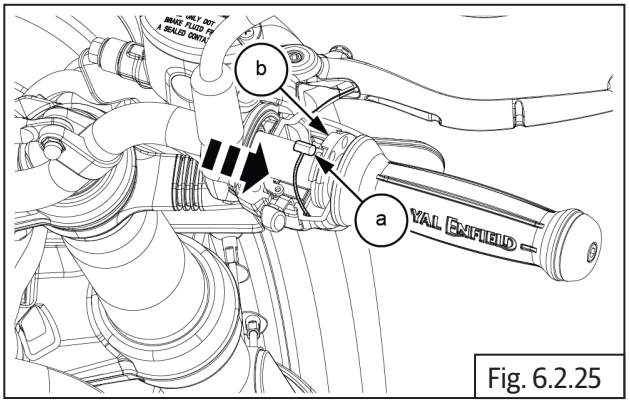

Fig. 6.2.25

- Insert the other throttle cable **(a)** and clip into the **front** hole in throttle rotor housing and locate inner cable in front eyelet on throttle rotor.
- Align inner cable to slot in the rotor, rotate and ensure proper routing of the inner cable in the slot in throttle rotor.

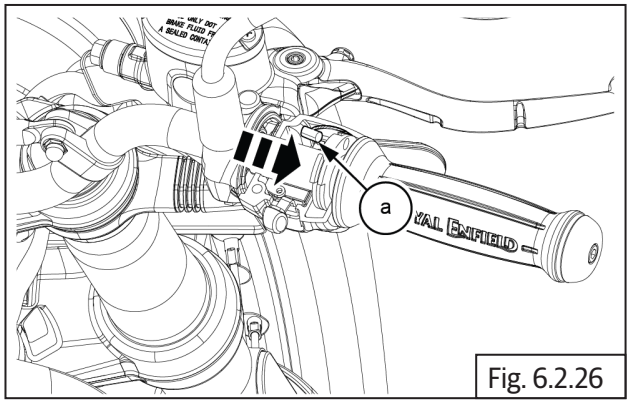

Fig. 6.2.26

- Locate and hold bottom housing against handlebar such that the throttle rotor is correctly seated in the groove in the bottom housing.
- Rotate throttle rotor clockwise, till it is resting on the bottom housing.
- Locate the top housing on the handlebar above the rotor, duly ensuring the following:
  - Throttle rotor is correctly seated in the groove in the top housing.
  - The locking peg in the top housing is located correctly into the hole in the handlebar.
  - The seating faces of the housing are matched correctly.
- Support top and bottom housings, check for free movement of the throttle rotor by gently rotating the throttle rotor grip.

- Insert long head screw **(M5) (a)** into the front mounting hole in bottom housing and tighten just sufficiently.

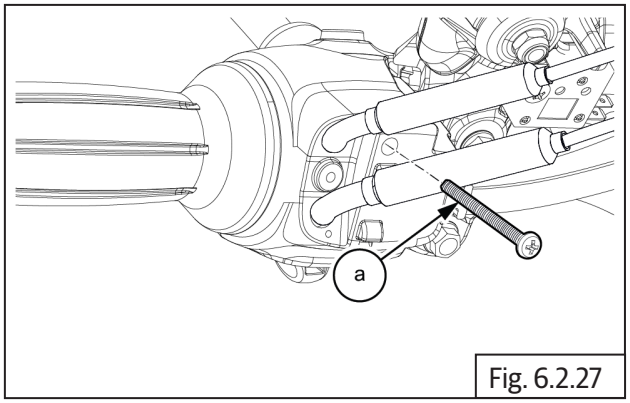

Fig. 6.2.27

	Screw driver (+)

- Insert short head screw **(M5) (a)** into rear mounting hole in bottom housing and tighten just sufficiently.

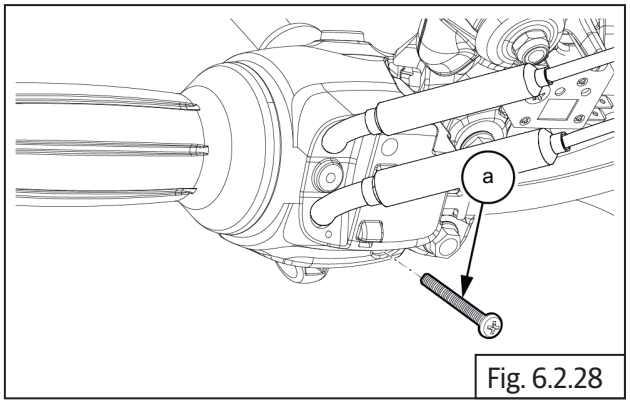

Fig. 6.2.28

	Screw driver (+)

- Check and ensure rotor housing is locked properly in handlebar and free movement of throttle rotor and tighten both screws **(M8) (a)** evenly till the housing is tight on the handlebar.

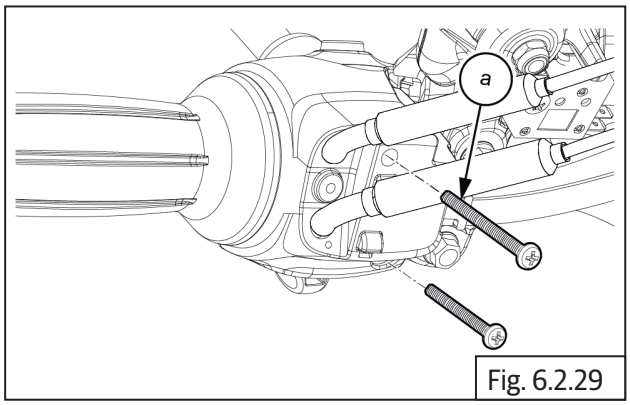

Fig. 6.2.29

	Screw driver (+)
	1.5 - 2 Nm / 0.15 - 0.2 kgf-m

- Locate the stopper plate **(a)** on the throttle cable.

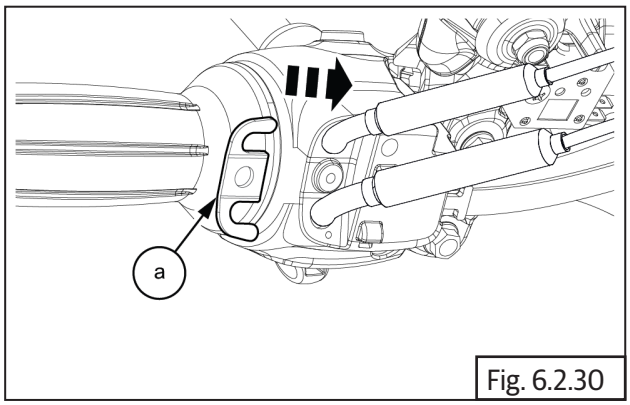

Fig. 6.2.30

- Tighten the screw **(M5) (a)** on the stopper plate,

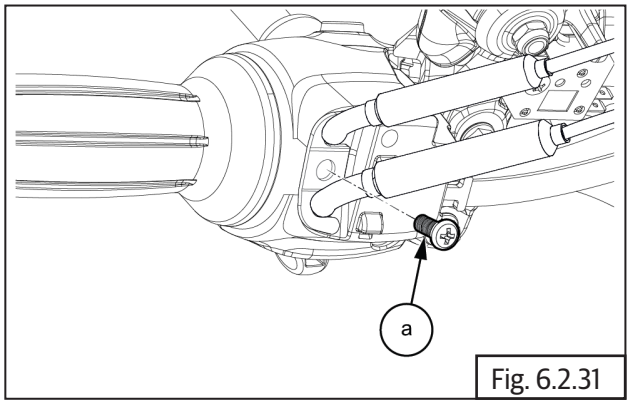

Fig. 6.2.31

	Screw driver (+)
	1.5 - 2 Nm / 0.15 - 0.2 kgf-m

Throttle Body End

- Gently open throttle at handlebar end and identify the cable in which the inner cable retracts.
- Insert this cable into the front slot in the bracket in the throttle body and ensure the adjuster is fully into the bracket on throttle body.
- Assemble lock nut on the inner cable.

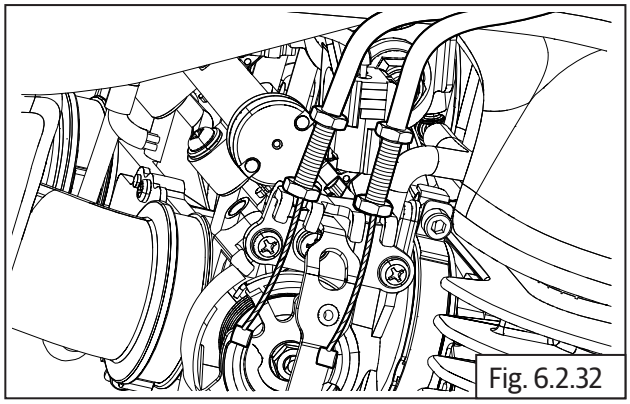
Fig. 6.2.32

- Position inner cable **(a)** to the front slot of the rotor on throttle body, insert inner cable into the eyelet and route the cable in the groove in the rotor of the throttle body.

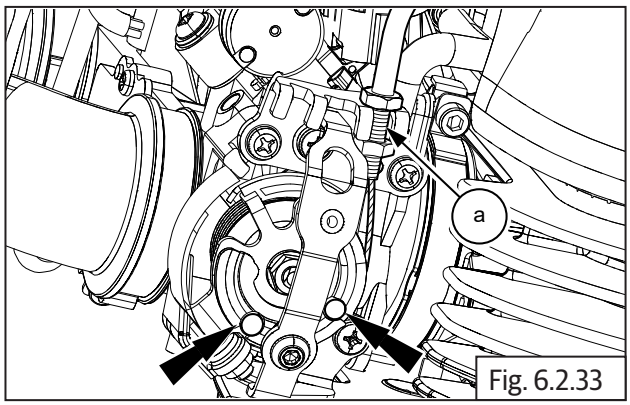

Fig. 6.2.33

- Repeat above steps to locate the other cable in the rear slot of the rotor on throttle body.

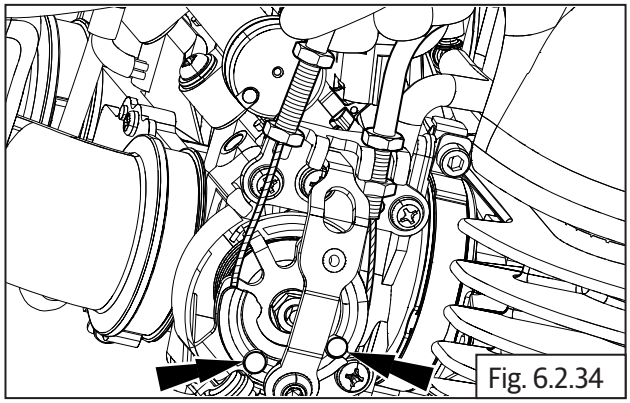
Fig. 6.2.34

- Ensure both inner cables are seated properly in the eyelets at throttle body end and handlebar end. Gently rotate throttle rotor at handlebar and ensure they are operating properly.

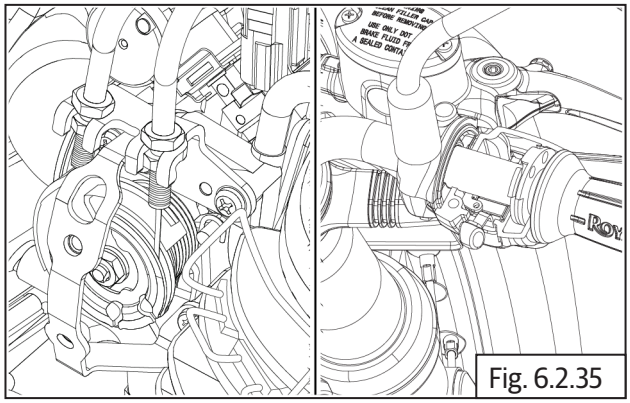
Fig. 6.2.35

6.2.4. Throttle Cables Free Play Adjustment

- Gently pull adjusters out of the bracket on throttle body end till the inner cables have **NO SLACK**.
- Tighten the outside nuts **(M8) (a)** and **(b)** on the adjusters till they are resting against the bracket on throttle body.

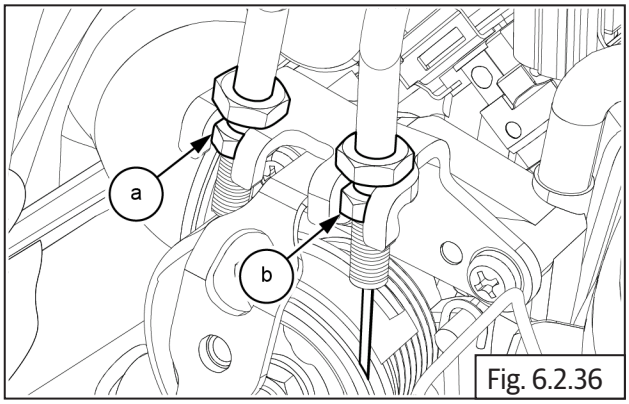

Fig. 6.2.36

	12 mm Combination Spanner

- Hold handlebar straight and check for free rotation of **2 to 3 mm**. (The rotor on the throttle body should not rotate).

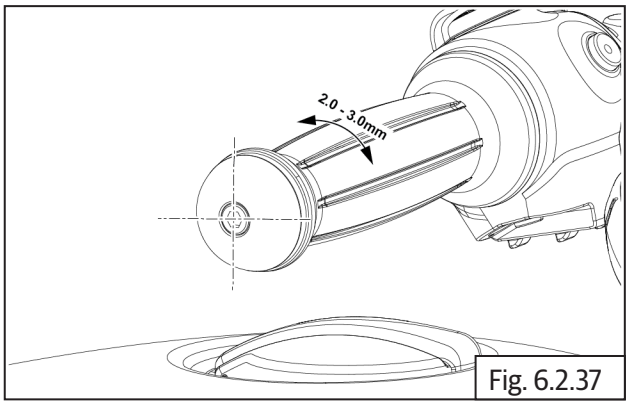

Fig. 6.2.37

- Loosen/Tighten the outer nuts to achieve the correct free play.

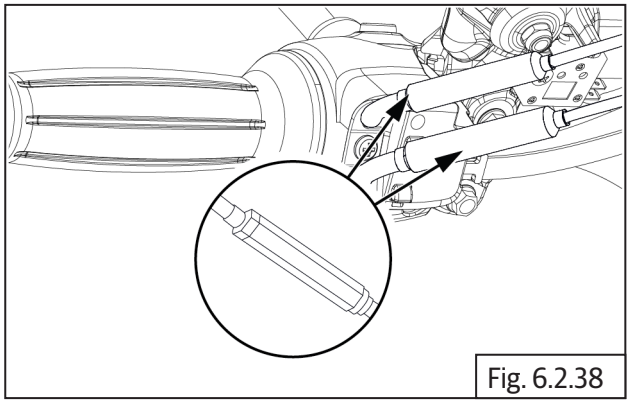

Fig. 6.2.38

- Check both cables are correctly positioned and clamped to the frame, turn handlebar to both left and right sides to ensure the free play is maintained.
- Tighten inner lock nuts **(M8) (a)** and **(b)** on the adjusters till they are firmly locked on the inside of the bracket.

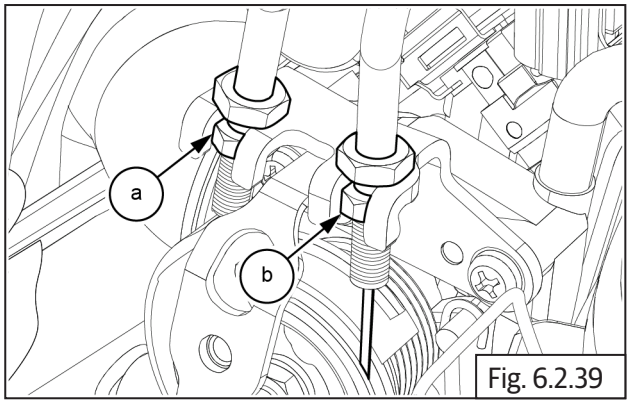

Fig. 6.2.39

NOTE
• *To carry out finer adjustments to maintain the free play, turn the adjusters on the cables at the handlebar end, in or out.*

- Locate throttle body cover RH **(a)** against the bracket and ensure holes are aligned and tighten with 2 Nos. Hex socket screws **(M5) (b)**.

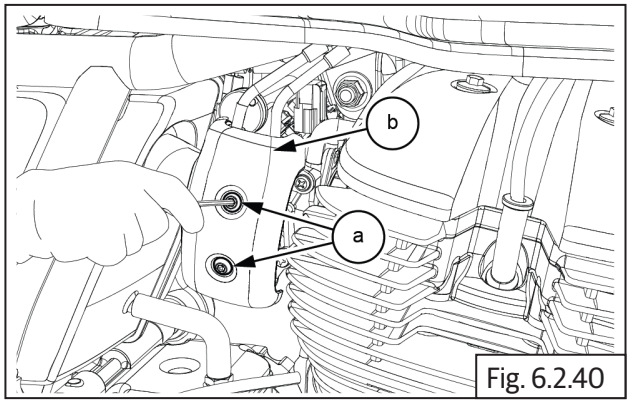

Fig. 6.2.40

	4 mm Allen socket with Ratchet
	2-3 Nm / 0.2 - 0.3 kgf-m

- Assemble fuel tank assembly (Refer_____).

6.2.5. Clutch Cable

Handlebar End

- Ensure adjuster on lever bracket LH is in midway position and the slot in the adjuster is correctly aligned to the slot in the lever bracket LH.

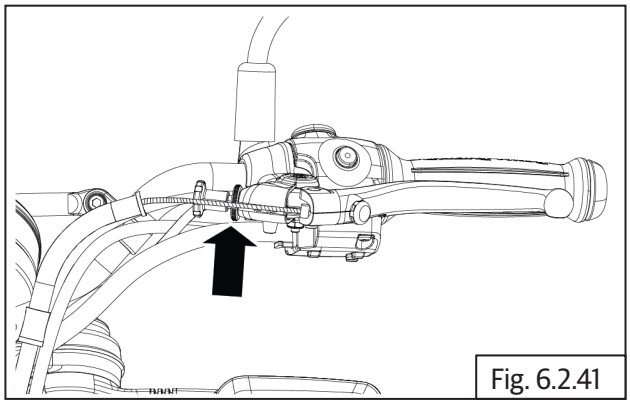

Fig. 6.2.41

- Locate inner cable into the eyelet on clutch lever and ensure it is aligned.
- Route inner cable into the slot in the clutch bracket and adjuster and lock the outer cable into adjuster.

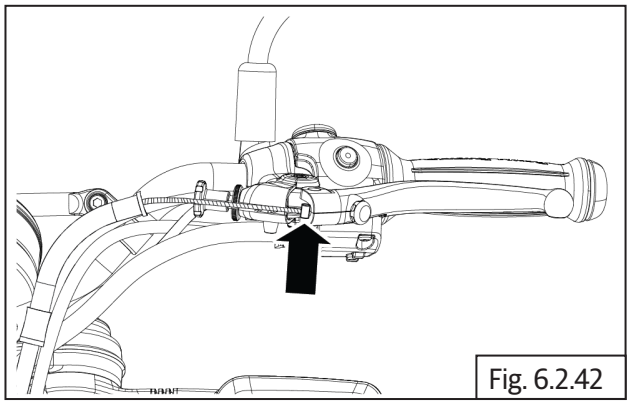

Fig. 6.2.42

- Route the cable to cradle wire guides **(a)** and **(b)**.

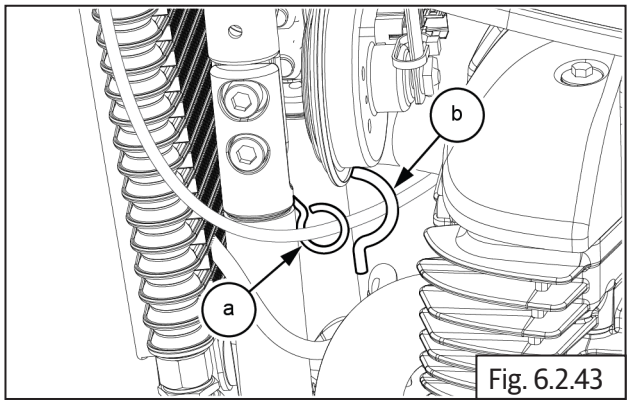

Fig. 6.2.43

- Route the cable **(b)** to wire guides **(a)** .

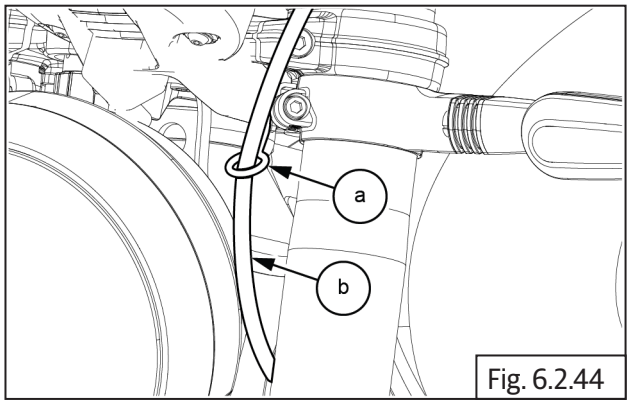

Fig. 6.2.44

- Locate and fix the clip **(a)** on clutch cable to frame near exhaust pipe RH.

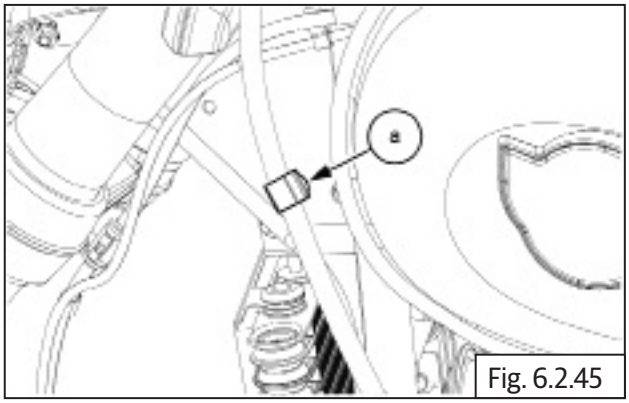

Fig. 6.2.45

NOTE
• *If any squeaking noise is still found while using the clutch lever, apply grease accordingly.*

Supplier	Mobil XHP 222
Grade	NLGI 2

Clutch cover End

- Insert inner cable into the cable guide **(b)** in clutch cover assembly and ensure the adjuster **(a)** is fully inside the guide in clutch cover assembly.

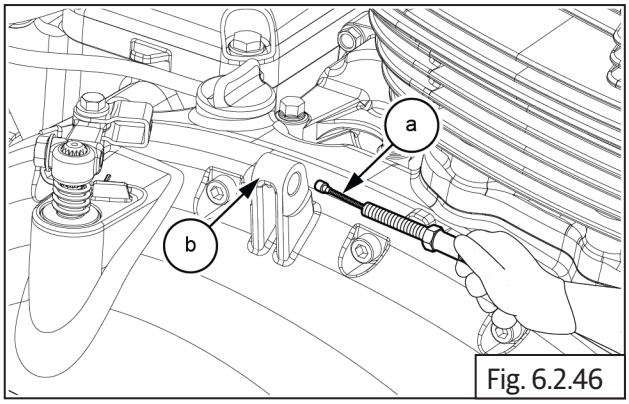

Fig. 6.2.46

- Assemble adjuster nut **(M8) (a)** on the adjuster and tighten by a few threads.

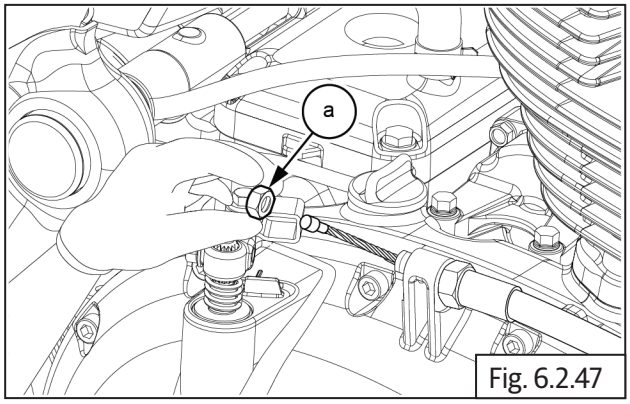

Fig. 6.2.47

- Assemble protective rubber boot **(a)** on the inner clutch cable **(b)**.

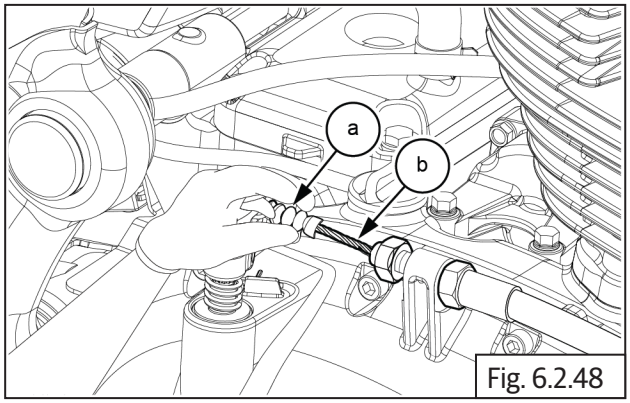

Fig. 6.2.48

- Gently locate inner cable **(a)** into clevis **(b)** in clutch lever **(c)**.

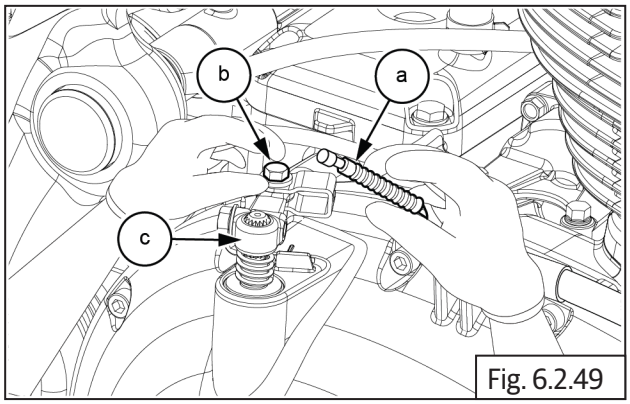

Fig. 6.2.49

6.2.5 Clutch Cable Free Play Adjustment

- Loosen adjuster nuts **(M8) (a)** completely in clutch cable **(b)**.

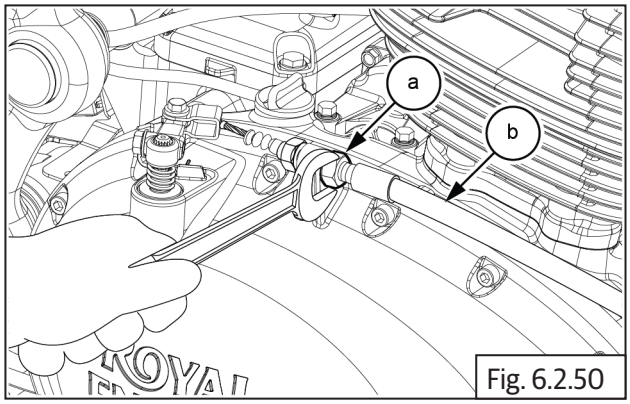

Fig. 6.2.50

	12mm Combination Spanner

- Tighten the adjuster **(a)** at clutch lever end.
- Now loosen the adjuster **(a)** for **4 full turns**.

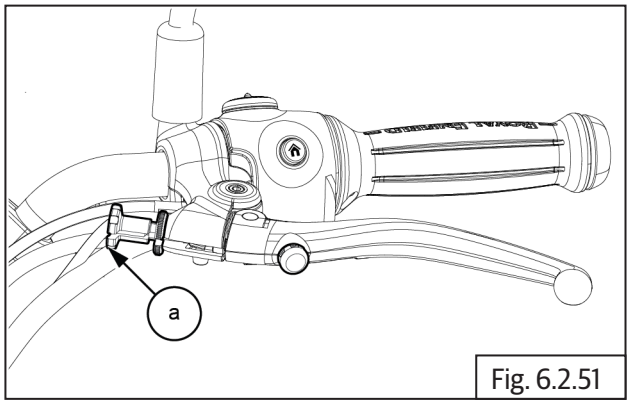

Fig. 6.2.51

- Adjust free play at engine to give zero free play.
- Tighten clutch cable adjuster nuts **(M8) (a)** and **(b)** at cover end.

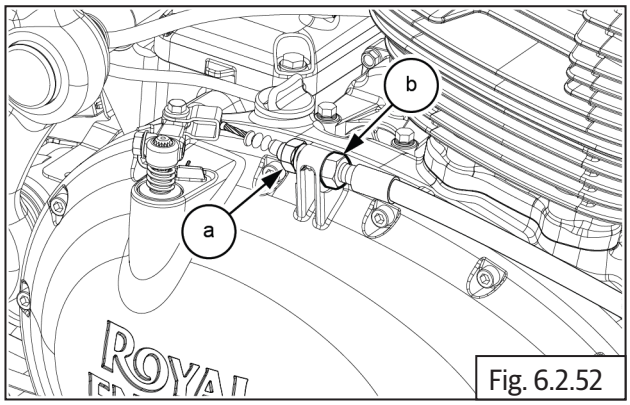

Fig. 6.2.52

	12mm Combination Spanner
	6 Nm / 0.6 kgf-m

- Put the steering to left lock position.

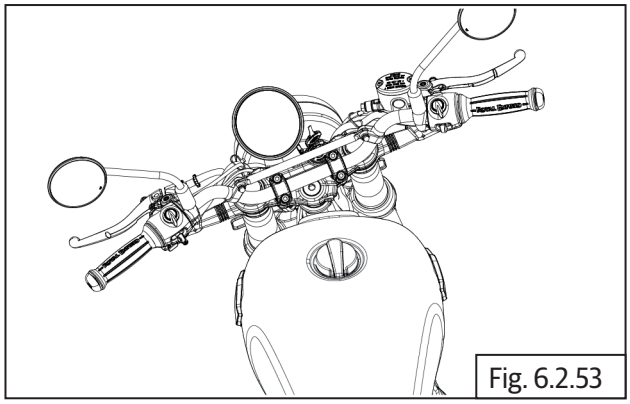
Fig. 6.2.53

- Arrange Steel ruler with electrical tape setup refer below image.

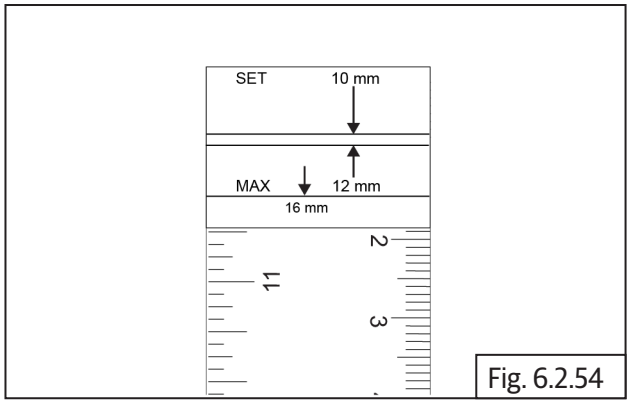

Fig. 6.2.54

- Align the scale with starting point of clutch lever ball during measurement.

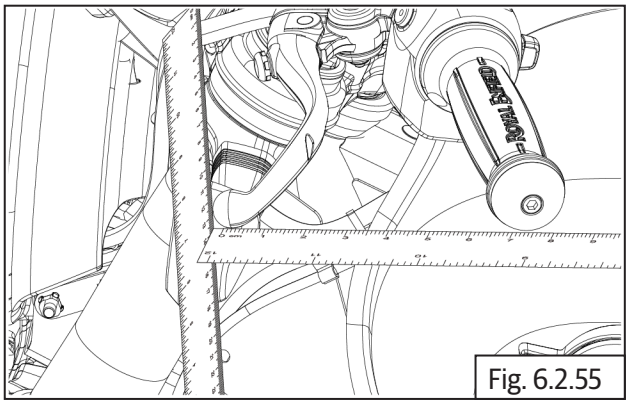
Fig. 6.2.55

- Actuate lever **3 times**, check free play of **10mm to 12mm** at clutch lever end.

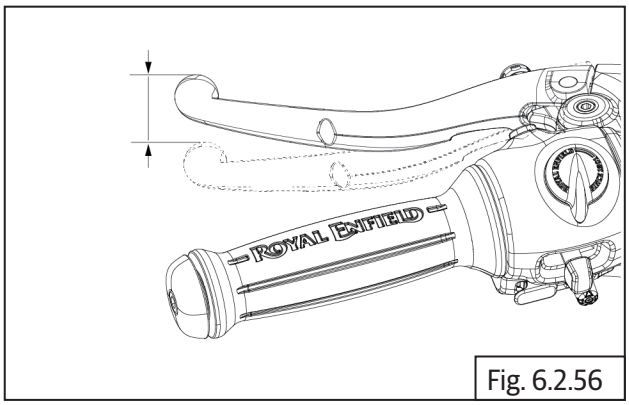

Fig. 6.2.56

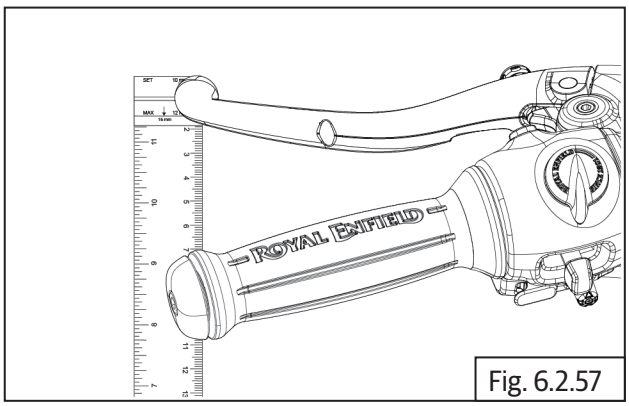

Fig. 6.2.57

- Tighten the clutch lever lock nut **(a)** with full hand tight.

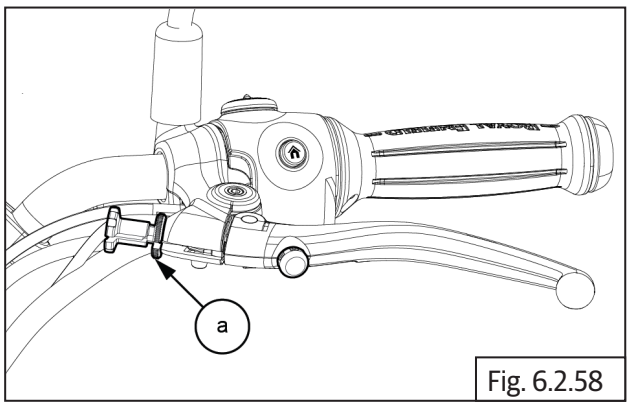

Fig. 6.2.58

- Check gap of **2±1 mm** at adjuster nut at cable end. If found to be irregular, adjust at engine end.

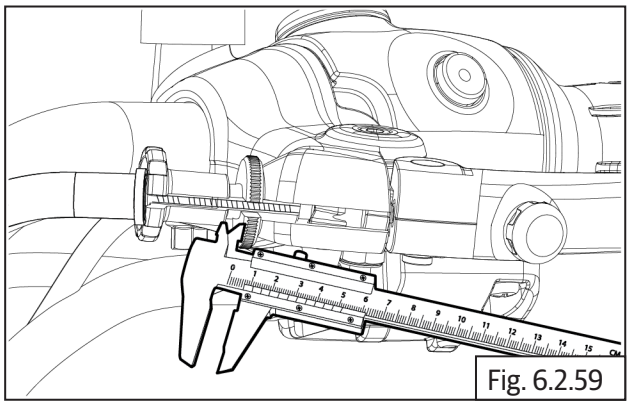
Fig. 6.2.59

- Position steering in straight position.

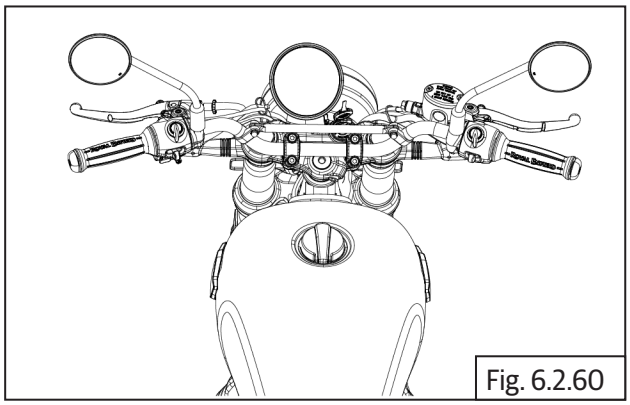
Fig. 6.2.60

- Actuate lever **3 times**, check free play of **10mm to 16mm** at clutch lever end.

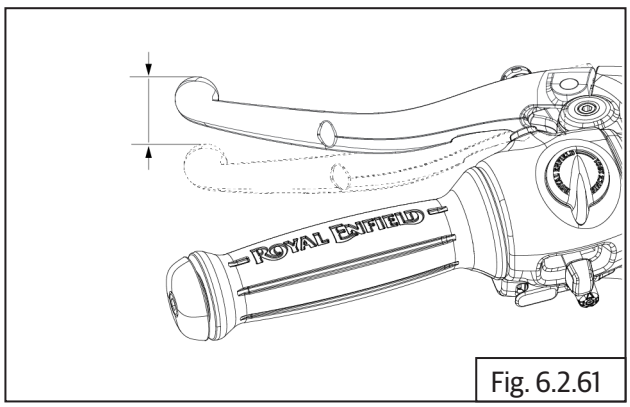

Fig. 6.2.61

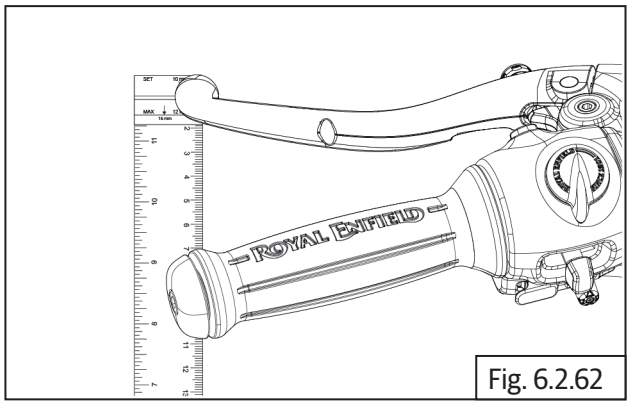

Fig. 6.2.62

- Ensure there is free hand movement at clutch actuating arm **(a)** when the handlebar is at full left position.

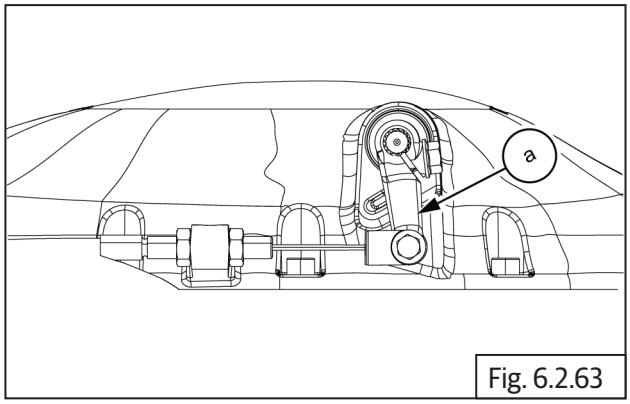

Fig. 6.2.63

Troubleshooting

Symptom	Possible Cause	Diagnosis	How to Fix	Recommended Specification
Clutch lever movement not smooth	Clutch lever operation at handlebar end is sticky	Clutch lever, bracket and pivot screw at handlebar end is dry without lubrication/excessive dirt accumulation	Clean and lubricate clutch lever, bracket and pivot screw at handlebar end	
	Clutch lever excessive movement in handlebar bracket LH	Clutch lever mounting hole is out of shape/fixing bolt worn-out	Check and clutch lever bracket assembly	
	Inner cable movement sticky in outer cable	Inner cable strands broken and jammed inside outer cable/clutch lever bracket	Check and clutch cable	
		Teflon tube inside outer cable torn/damaged	Check and clutch cable	
	Clutch shaft movement sticky in cover RH	Poor/no lubrication of the clutch shaft in cover RH/ uneven wear-out of clutch shaft/cover RH	Check and clutch shaft/ cover RH	
	Clutch plates movement in clutch housing is sticky	Clutch plates/clutch housing damaged	Check and clutch plates/ clutch assembly	
Clutch operation hard	Clutch lever movement in bracket hard	Clutch lever, bracket and pivot screw at handlebar end is dry without lubrication/excessive dirt accumulation	Clean and lubricate clutch lever, bracket and pivot screw at handlebar end	
	Inner cable movement sticky in outer cable	Inner cable strands broken and jammed inside outer cable/clutch lever bracket	Check and clutch cable	
		Teflon tube inside outer cable torn/damaged	Check and clutch cable	
	Clutch shaft movement hard in cover RH	Poor/no lubrication of the clutch shaft in cover RH/ uneven wear-out of clutch shaft/cover RH	Check and clutch shaft/ cover RH	
	Clutch plates burnt and hard	Clutch plates burnt/hard/ clutch housing damaged	Check and clutch plates/ clutch assembly	

Symptom	Possible Cause	Diagnosis	How to Fix	Recommended Specification
Throttle rotor movement sticky/ opening hard	Throttle cables are stuck between frame and fuel tank	Throttle cables stuck/ jammed between frame and fuel tank	Check cable routing and proper strapping to frame	
	Throttle rotor movement in housing is sticky	Throttle rotor area in the housing is dry/heavy dirt accumulation	Check and lubricate throttle rotor and housing in handlebar	
	Throttle rotor cable seating area damaged	The eyelets in the throttle rotor are damaged/inner cable eyelets not seating correctly in the rotor eyelets	Check and throttle cables/ throttle rotor	
	Inner cables movement sticky in outer cable	Throttle cables inner strands broken	Check and throttle cables	
		Teflon coating in between inner/outer throttle cables damaged		

HANDLEBAR

CONTENTS **PAGE**

19. Handlebar 778

Dismantling 778

19.1. Aggregates of Handlebar 778

19.2. Handlebar 781

19.3. Top Yoke 782

Inspection 783

Assembly 783

9.6. Top Yoke 783

19.7. Handlebar 784

19.8. Aggregates of Handlebar - Interceptor Bear 650 786

Troubleshooting 791

19. Handlebar

Dismantling

19.1.Aggregates of Handlebar

- Remove the following parts:
  - Throttle cable.(Refer_____)
  - Clutch cable. (Refer_____)
  - Brake master cylinder front. (Refer_____)
  - Electrical connections on LH and RH handlebar (Refer_____).
  - Cable routing straps. (Refer_____).
- Remove head lamp with cowl assembly (Refer_____).
- Slightly lift rubber boot **(a)**, loosen Hex nut **(M10) (b)** clockwise direction.
- Rotate the LH mirror clockwise direction to remove from handlebar.

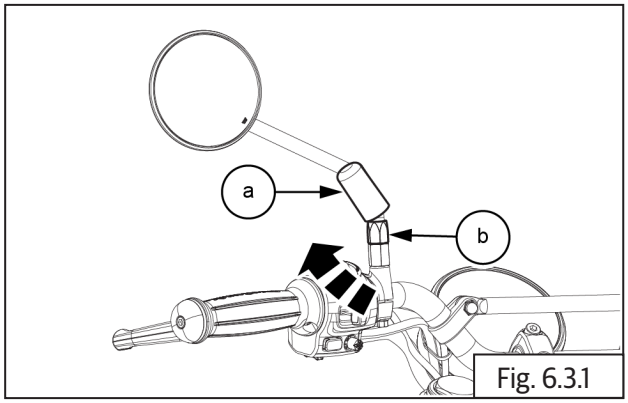

Fig. 6.3.1

	16 mm Combination Spanner

⚠ CAUTION

Left hand thread!

DO NOT rotate the mirror after it comes to stop on the bracket as it will cause the bracket to crack.

Always position mirror and lock in place with rider seated on the motorcycle.

- Slightly lift rubber boot **(a)**, loosen Hex nut **(M10) (b)** anti clockwise direction.
- Rotate the RH mirror anti clockwise direction to remove from handlebar.

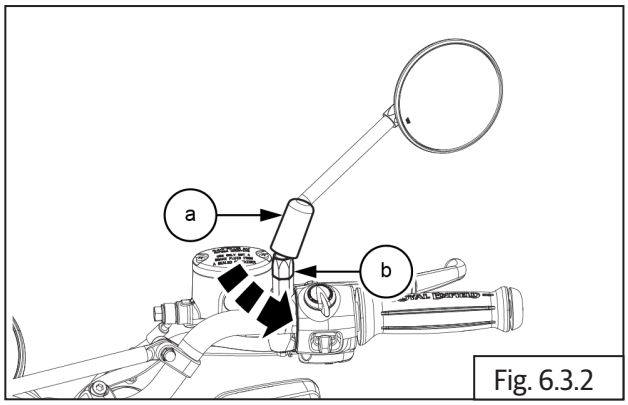

Fig. 6.3.2

	16 mm Combination Spanner

- Loosen and remove Hex socket bolt **(M6) (a)** along with balancer **(b)** from handlebar RH.

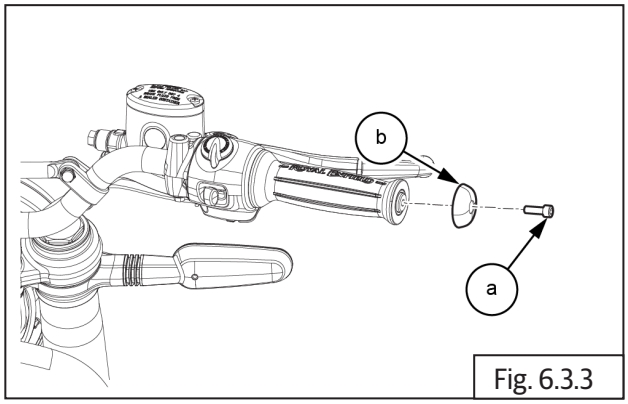

Fig. 6.3.3

	5mm Allen Socket with Ratchet

- Disconnect brake lamp switch connectors **(a)** from front brake switch **(b)**.

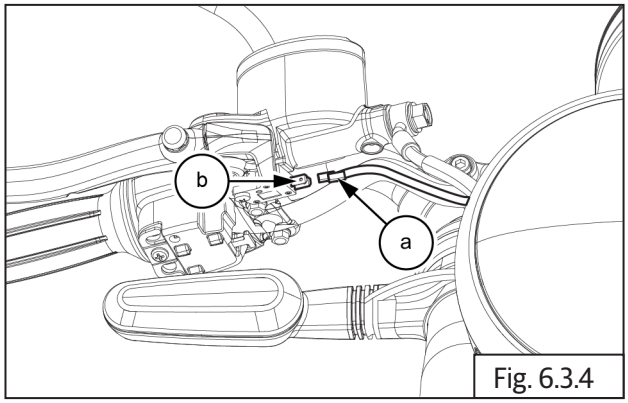

Fig. 6.3.4

⚠ CAUTION

Ensure master cylinder assembly is supported after removing.

- Loosen and remove 2Nos Phillips head screws **(M5) (a)** from the bottom of the throttle rotor housing.

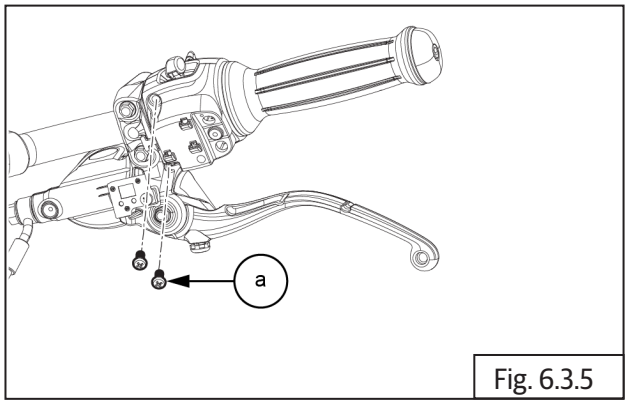

Fig. 6.3.5

	Screw driver (+)

- Gently separate switch module top **(a)** and bottom **(b)** from handlebar RH.

⚠ CAUTION

Support RH switch module carefully after removal.

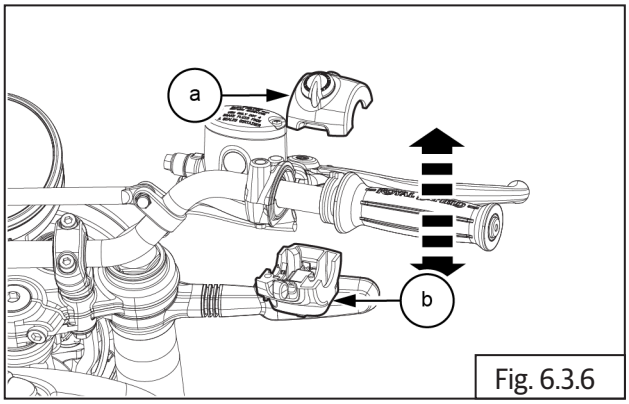

Fig. 6.3.6

⚠ CAUTION

Gently remove the grip from the handlebar RH

- Disconnect throttle cables. (Refer_____).
- Gently remove throttle rotor **(a)** from the handlebar RH .

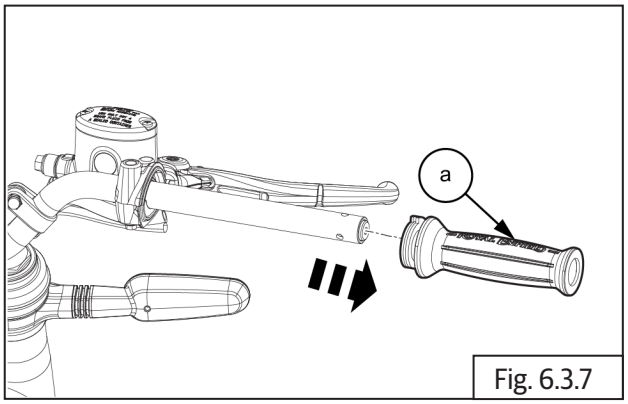

Fig. 6.3.7

- Loosen and remove 2Nos Hex flange head bolt **(M5) (a)** to remove master cylinder assembly along with cap.

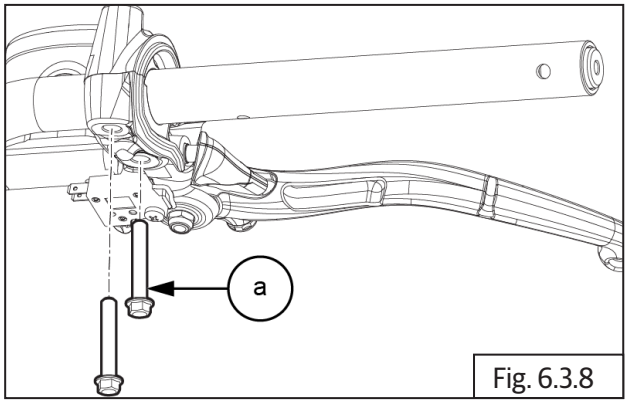

Fig. 6.3.8

	8 mm Socket with Ratchet

⚠ CAUTION

Ensure master cylinder assembly is supported after removing.

- Loosen and remove Hex socket head bolt **(M6) (a)** along with end weight **(b)** from handlebar LH.

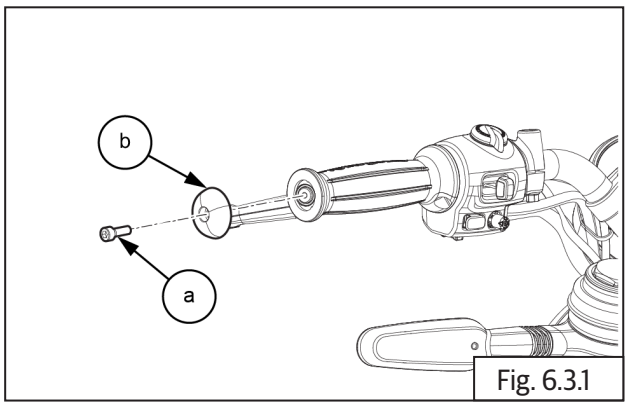

Fig. 6.3.1

	5mm Allen Socket with Ratchet

- Loosen and remove 2 Nos Torx screws **(a)** from LH handlebar grip.

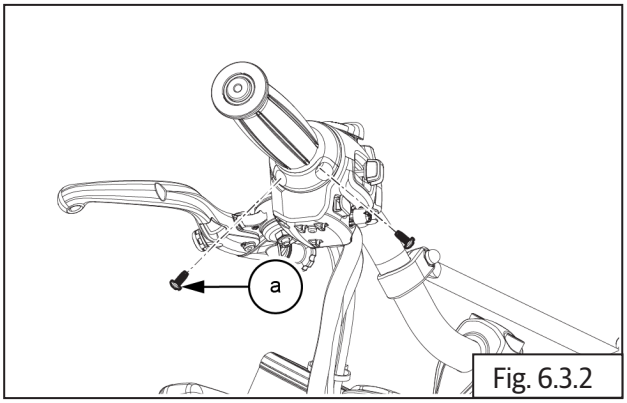

Fig. 6.3.2

	T 20 Torx Socket with Ratchet

⚠ CAUTION

Gently remove the grip from the handlebar LH

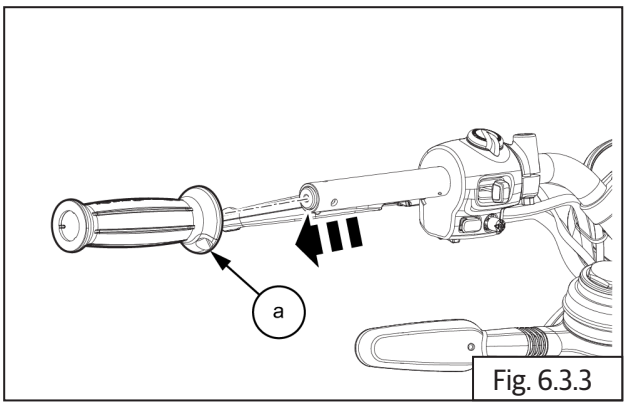

Fig. 6.3.3

- Loosen and remove 2Nos Phillips head screws **(a)** from switch module on handlebar LH.

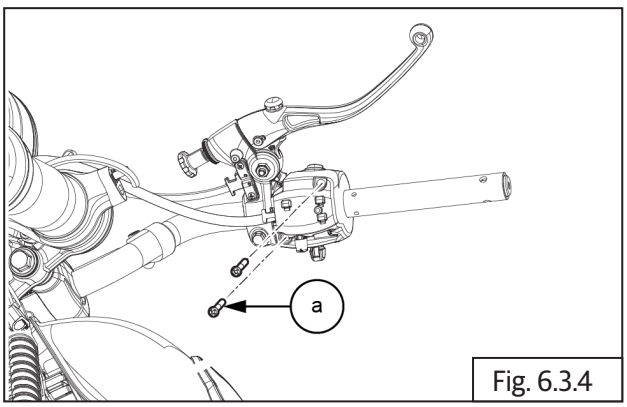

Fig. 6.3.4

	Screw driver (+)

- Gently separate top **(a)** and bottom **(b)** switch module and remove from handlebar LH.

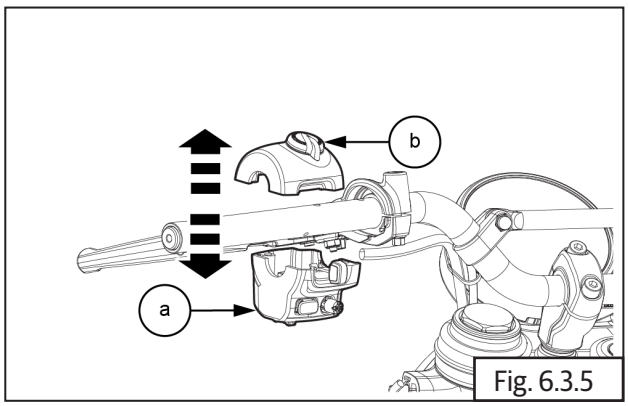

Fig. 6.3.5

- Disconnect clutch cable from handlebar LH. (Refer_____).
- Loosen Hex flanged head bolt **(M6) (a)** sufficiently on clutch lever bracket LH.

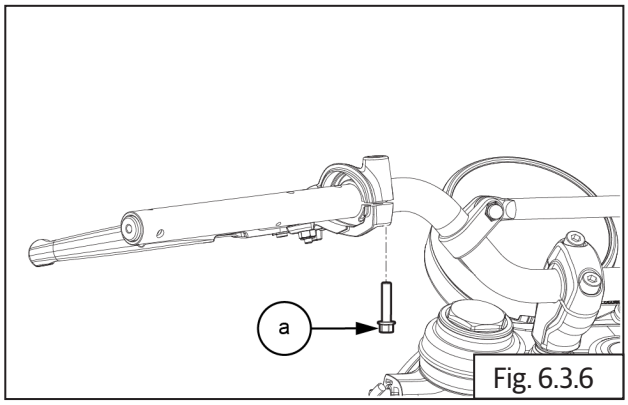

Fig. 6.3.6

	8 mm Socket with Ratchet

- Gently rotate and pull out clutch lever bracket LH **(a)** from handlebar LH.

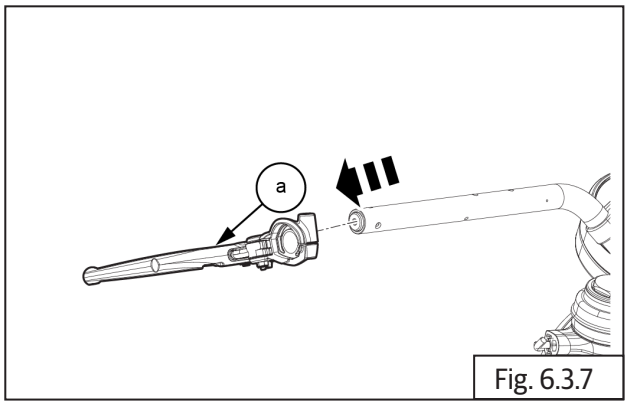

Fig. 6.3.7

19.2. Handlebar

- Loosen and remove 4 Nos cap bolts **(M8) (a)** from top riser.

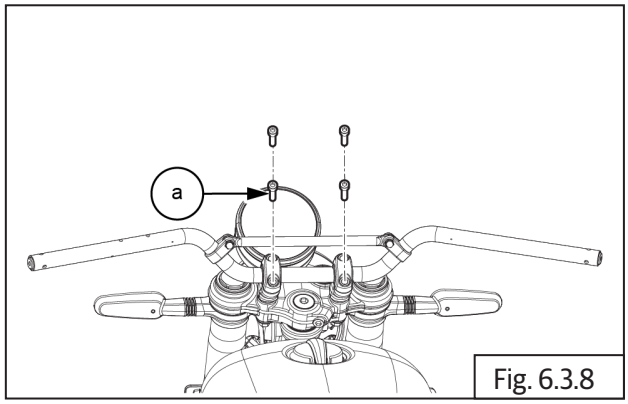

Fig. 6.3.8

	6 mm Allen socket with Ratchet

- Remove 2 Nos top riser **(a)** from handlebar**.**

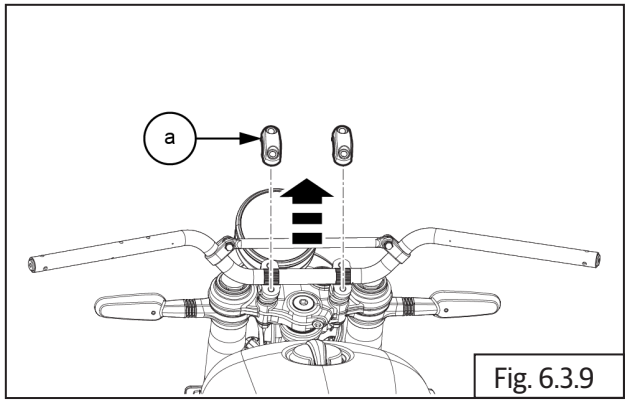

Fig. 6.3.9

- Remove handlebar **(a)** from bottom riser.

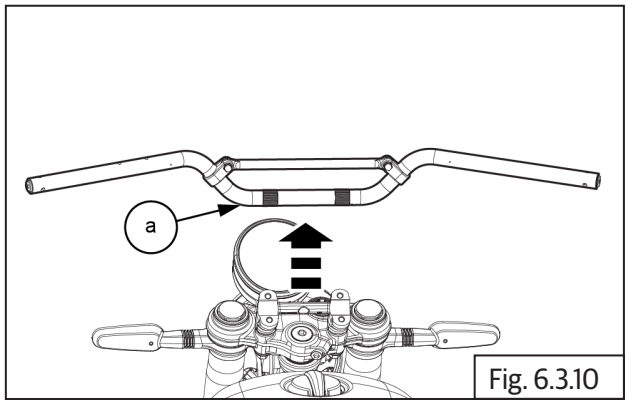

Fig. 6.3.10

- Loosen and remove 2 Nos Hex head flanged bolts **(M10) (a)** from yoke top and raiser handlebar.

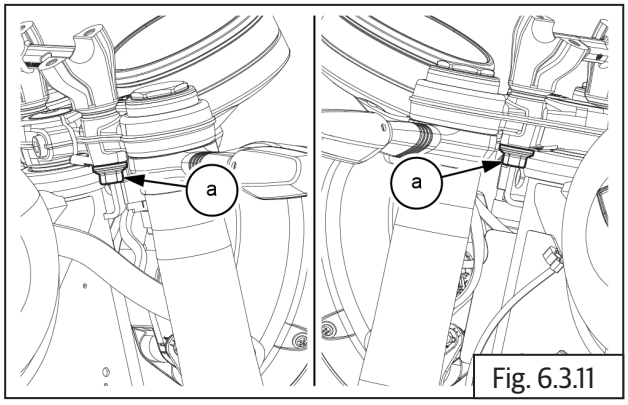

Fig. 6.3.11

	14 mm Socket with Ratchet

- Remove bottom riser **(a)** from top yoke.

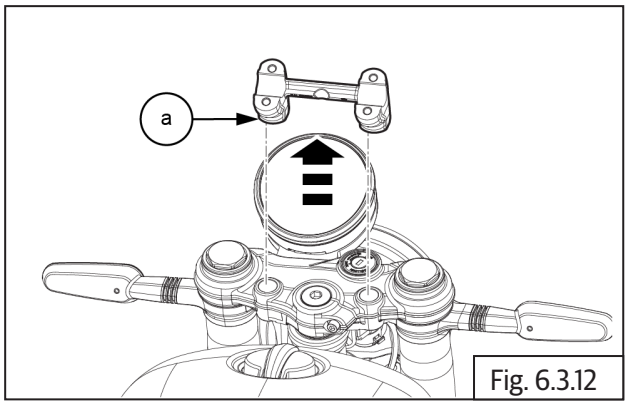

Fig. 6.3.12

- Remove flange sleeve 4 Nos **(a)** and 4 Nos rubber bush **(b)** from upper yoke.

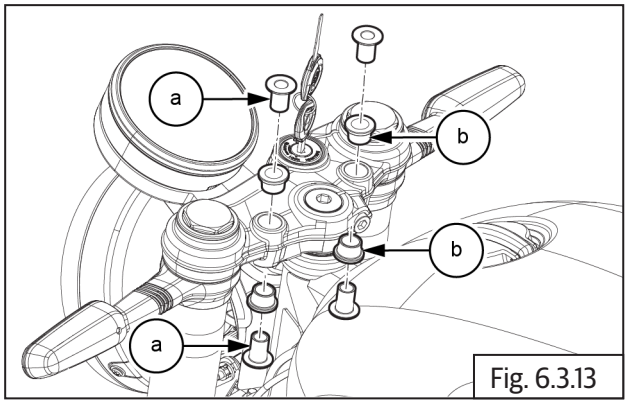

Fig. 6.3.13

- Loosen and remove 2 Nos Hex socket bolts **(M6) (a)** and nuts **(b)** to remove handle bar brace.

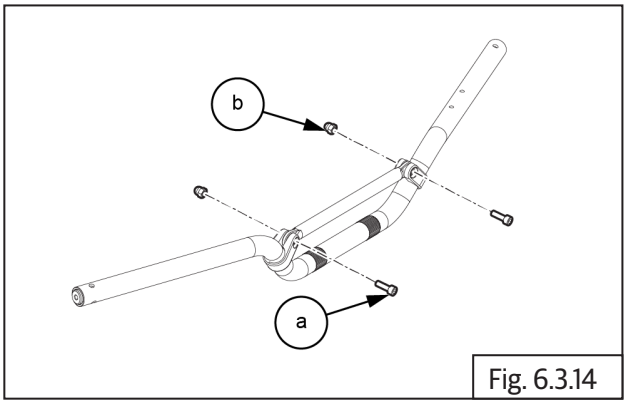

Fig. 6.3.14

	5 mm Allen Socket with Ratchet 10 mm Socket with Ratchet

- Remove clamp handlebar brace **(a)** from handlebar.

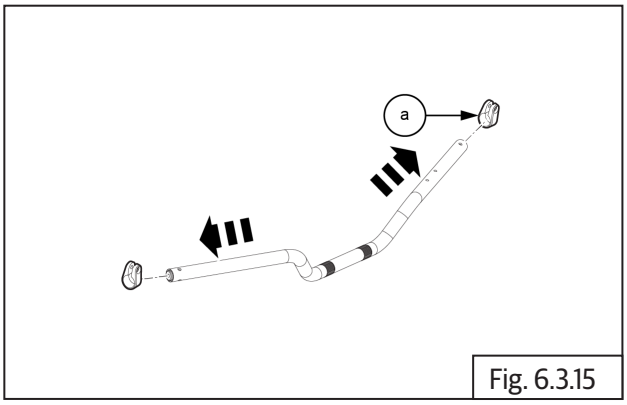

Fig. 6.3.15

19.3. Top Yoke

- Remove ignition switch (Refer_____).
- Remove handlebar (Refer_____).
- Remove head lamp with cowl assembly (Refer_____).
- Loosen and remove 2 Nos cap bolts **(M8) (a)** from LHS and RHS upper yoke.

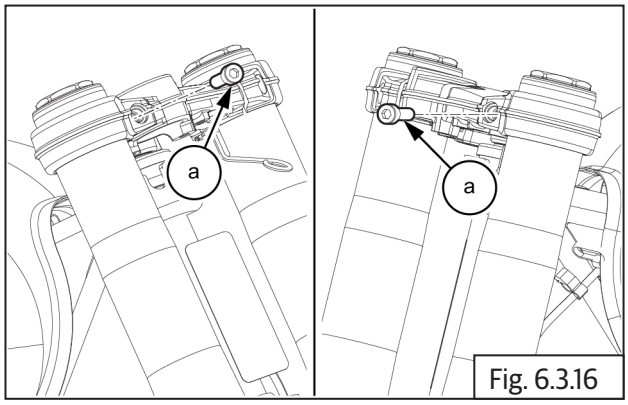

Fig. 6.3.16

	6 mm Allen socket with Ratchet

- Loosen and remove cap bolt **(M10) (a)** from middle upper yoke.

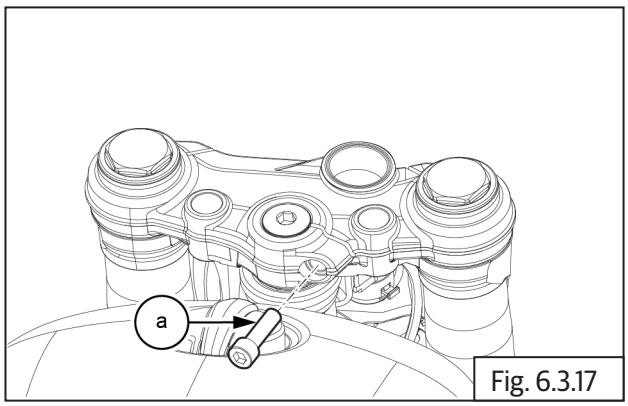

Fig. 6.3.17

	8 mm Allen socket with Ratchet

- Remove upper yoke **(a)** from front fork.

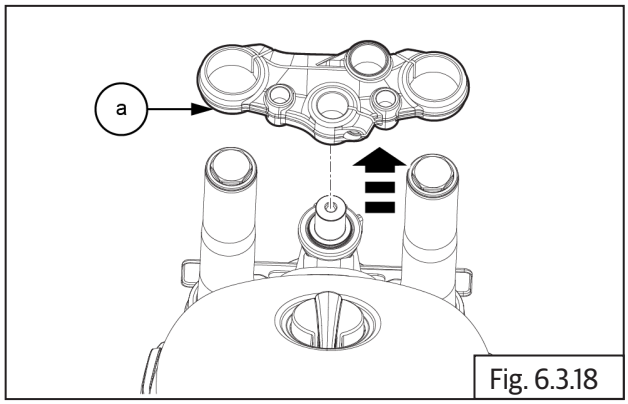

Fig. 6.3.18

Inspection

- Inspect handlebar LH and RH for any bends, cracks or damages. Replace if necessary.
- Inspect rubber grip tightness and replace if it has lost grip.

Assembly

9.6. Top Yoke

- Locate upper yoke **(a)** on the LH and RH fork assembly and ensure both forks seated properly in the upper yoke.

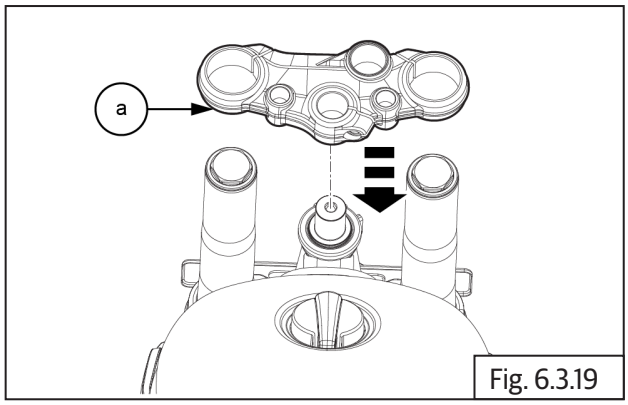

Fig. 6.3.19

- Insert and tighten cap bolt **(M10) (a)** on middle upper yoke.

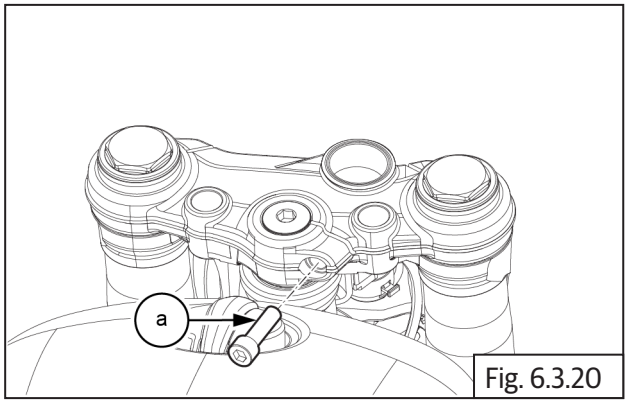

Fig. 6.3.20

	8 mm Allen socket with Ratchet
	38 - 42 Nm / 3.8 - 4.2 kgf-m

- Insert and tighten 2Nos cap bolts **(M8) (a)** on RHS and LHS of upper yoke.

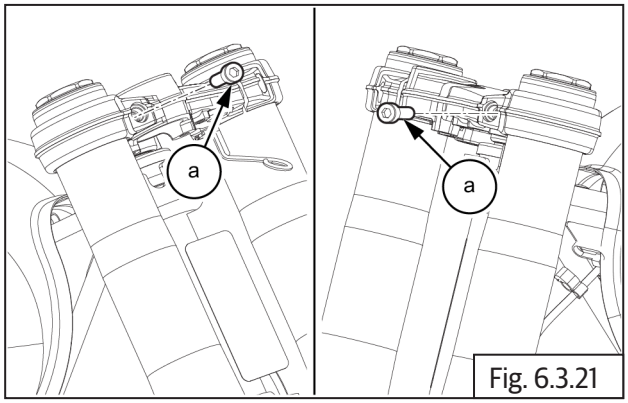

Fig. 6.3.21

	6 mm Allen socket with Ratchet
	23 - 27 Nm / 2.3 - 2.7 kgf-m

- Assemble the following parts:
  - Install ignition switch
  - Install handlebar
  - Install headlamp with cowl assembly

19.7. Handlebar

- Assemble clamps handlebar brace **(a)** into handlebar **.**

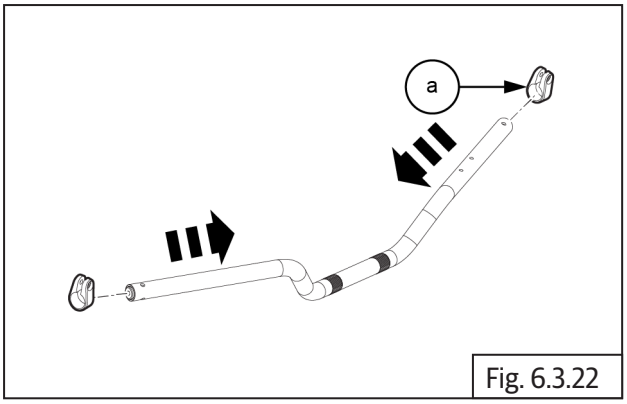

Fig. 6.3.22

- Locate and tighten 2 Nos. Hex flange head bolts **(M6) (a)** and nuts **(b)** into yoke top and raiser handlebar.

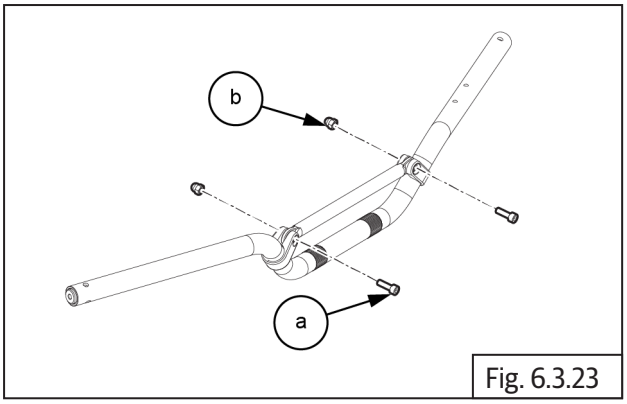

Fig. 6.3.23

	5 mm Allen Socket with Ratchet 10 mm Socket with Ratchet
	8 - 12 Nm / 0.8 - 1.2 kgf-m

- Locate the flange sleeves 4 Nos **(a)** and 4 Nos rubber bushes **(b)** on upper yoke.

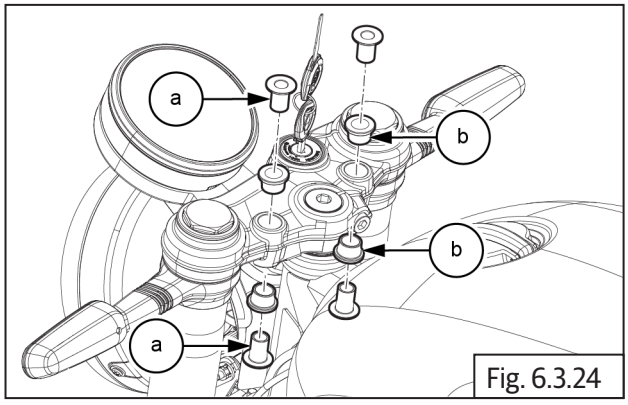

Fig. 6.3.24

- Locate the bottom riser **(a)** on upper yoke .

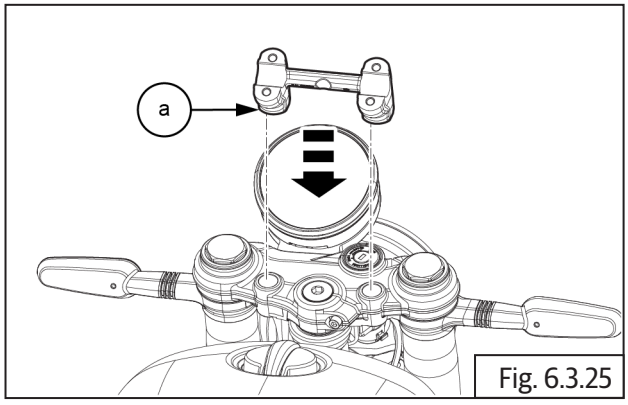

Fig. 6.3.25

- Locate and tighten 2 Nos. Hex flange head bolts**(M10) (a)** into upper yoke and raiser handlebar .

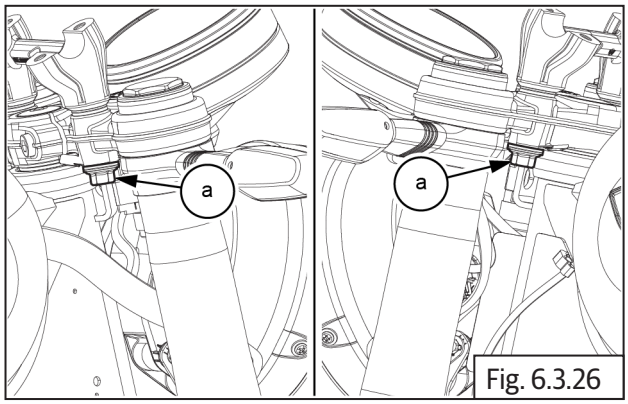

Fig. 6.3.26

	14 mm Socket with Ratchet
	43 - 47 Nm / 4.3 - 4.7 kgf-m

- Assemble handlebar **(a)** on bottom raiser.

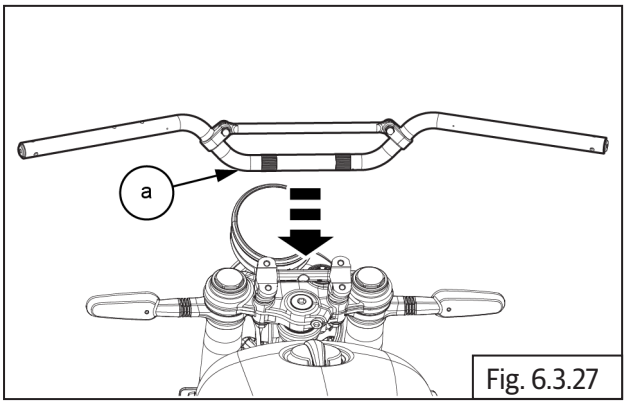

Fig. 6.3.27

- Install 2 Nos top riser **(a)** on handlebar**.**

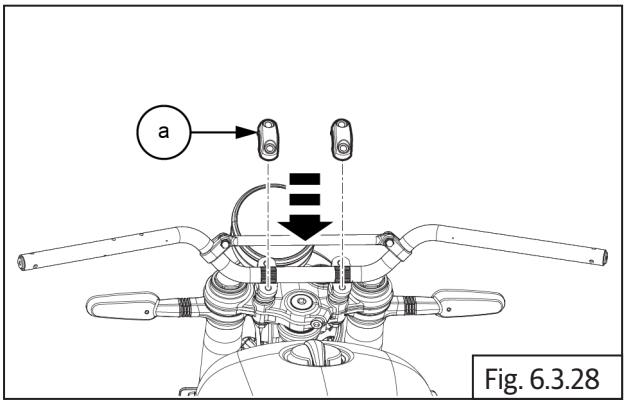

Fig. 6.3.28

NOTE
• *Ensure the steering handlebar align marks/dots are matched with clamp handlebar parallel.*

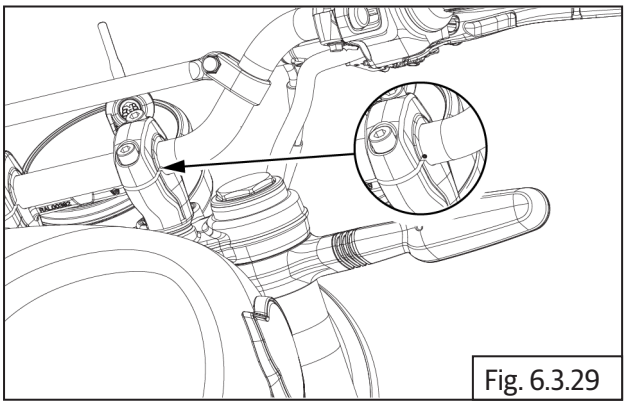
Fig. 6.3.29

- Locate and tighten 4 Nos cap bolts **(M8) (a)** into clamp handlebar.

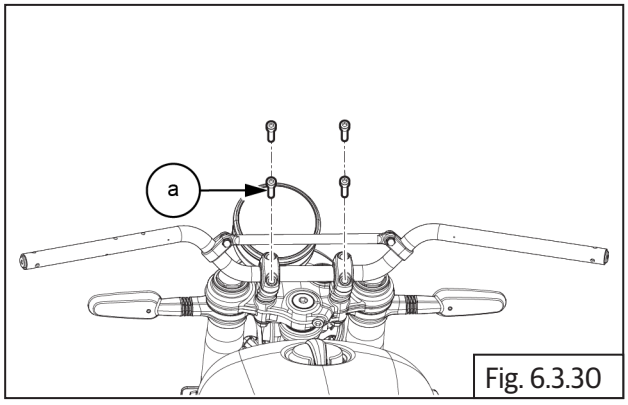

Fig. 6.3.30

	6 mm Allen socket with Ratchet
	16 - 24 Nm / 1.6 - 2.4 kgf-m

19.8. Aggregates of Handlebar - Interceptor Bear 650

- Insert clsutch lever bracket **(a)** on LH handlebar till the mounting hole switch module is visible.

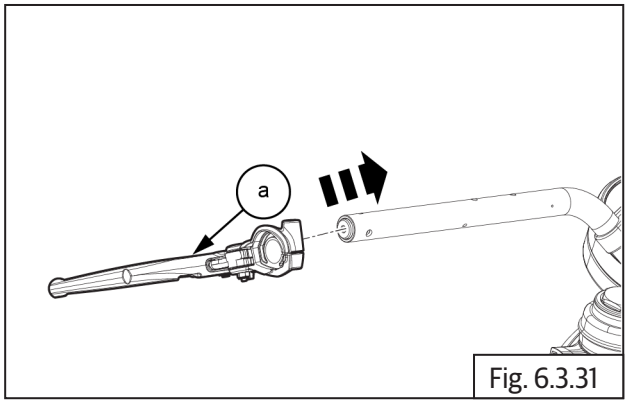

Fig. 6.3.31

- Connect clutch cable on LH handlebar lever (Refer_____).
- Locate and tighten Hex flanged head bolt **(M6) (a)** sufficiently on clutch lever bracket LH.

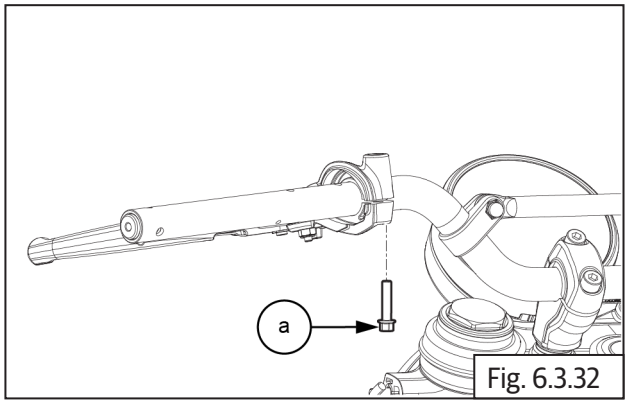

Fig. 6.3.32

	8 mm Socket with Ratchet
	11-13 N-m/1.1-1.3 kgf-m

- Gently assemble top **(a)** and bottom **(b)** switch module and locate on handlebar LH.

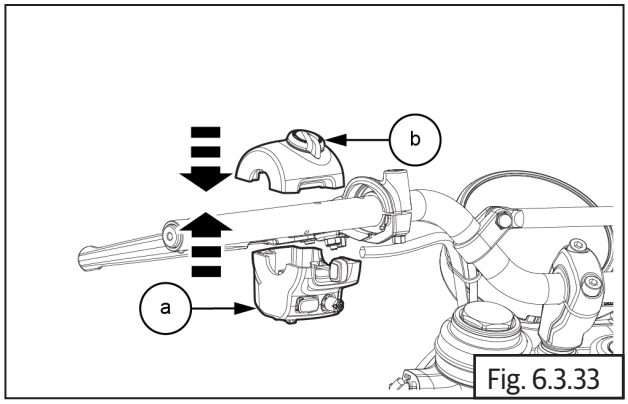

Fig. 6.3.33

- Locate and tighten 2 Nos Phillips head screws **(M5) (a)** on switch module on handlebar LH.

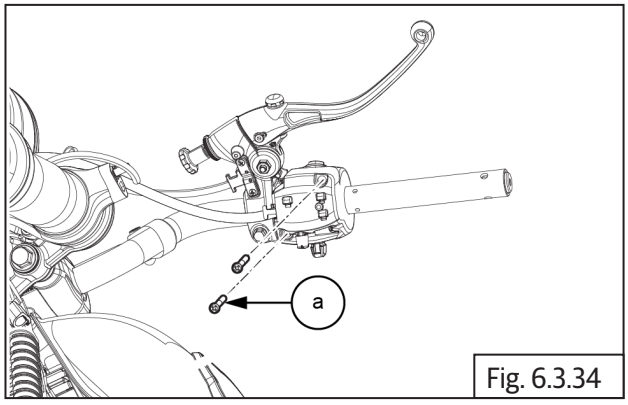

Fig. 6.3.34

	Screw driver (+)
	1.5 - 2 Nm / 0.15 - 0.2 kgf-m

- Locate and insert the grip **(a)** into the handlebar

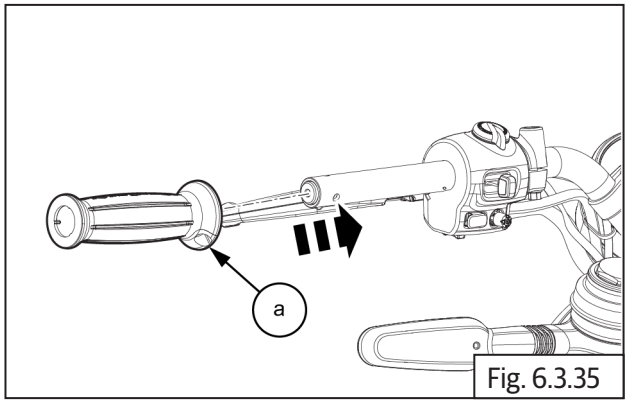

Fig. 6.3.35

- Locate and tighten 2 Nos. Torx screws **(a)** on LH handlebar grip.

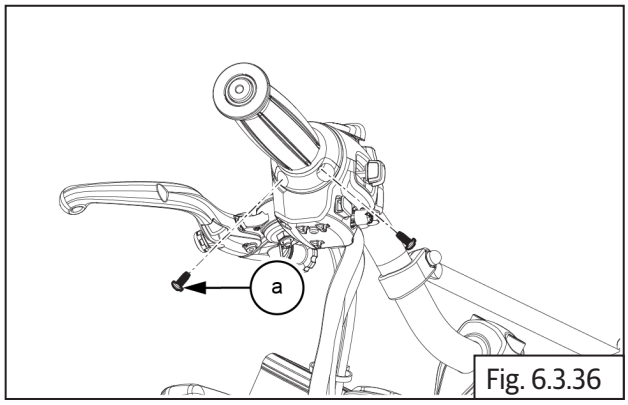

Fig. 6.3.36

⚠ CAUTION

DO NOT over tighten

	Phillips screw driver
	2 - 2.5 Nm / 0.2 - 0.25 kgf-m

- Insert and tighten Hex socket head bolt **(M6) (a)** along with end weight **(b)** into handlebar LH.

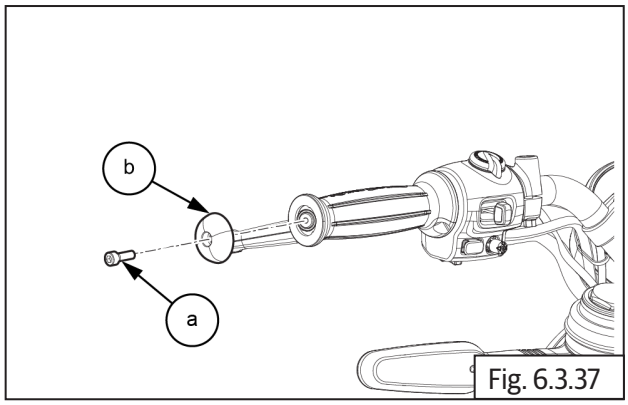

Fig. 6.3.37

	5 mm Allen Socket with Ratchet
	8 - 12 Nm / 0.8 - 1.2 kgfm

- Locate the master cylinder assembly **(b)** along with cap **(a)** on RH handlebar.

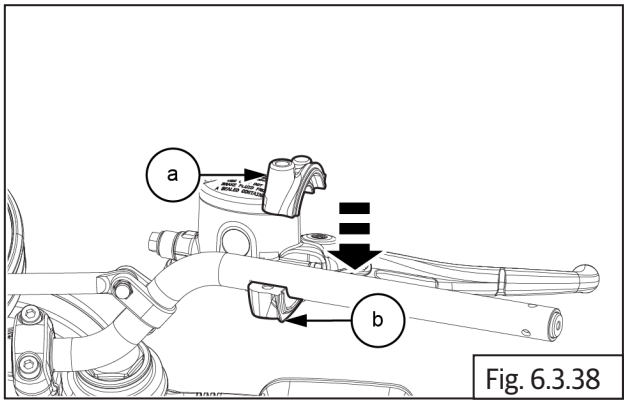

Fig. 6.3.38

- Insert and tighten 2 Nos Hex flange head bolt **(M5) (a)** on master cylinder.

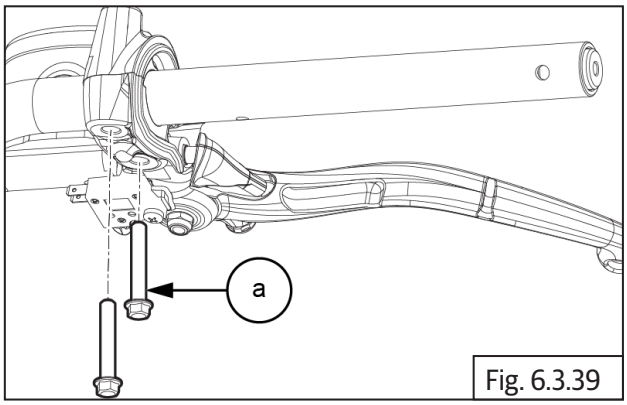

Fig. 6.3.39

	8 mm Socket with Ratchet
	5 Nm / 0.5 kgf-m

- Lubricate throttle rotor grip inside with general purpose grease and assemble on handlebar RH.
- Ensure the cable slots on the rotor are facing above for correct and ease of assembly of inner cables.
- Gently locate and insert the throttle rotor **(a)** into the handlebar RH.

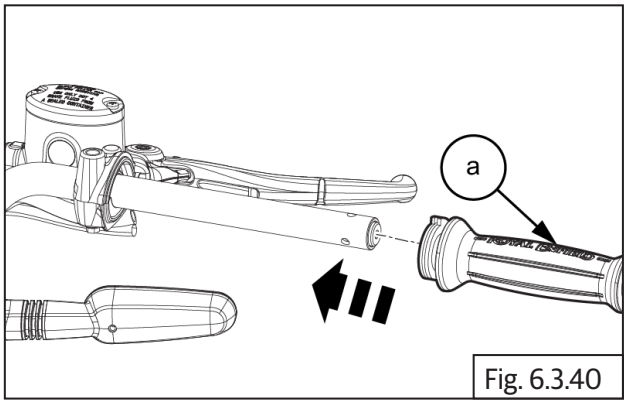

Fig. 6.3.40

- Connect throttle cables to throttle rotor grip. Assemble switch module top **(a)** and bottom **(b)** on handlebar RH. Ensure peg on RH switch module top half is correctly located in the hole in handlebar.

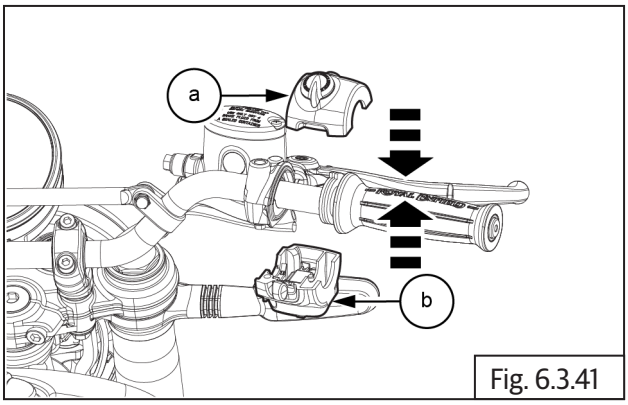

Fig. 6.3.41

- Insert long head screw **(M5) (a)** into the front mounting hole in bottom housing and tighten just sufficiently.

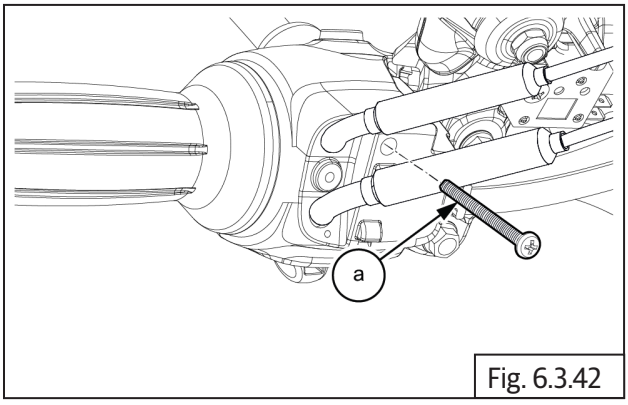

Fig. 6.3.42

	Screw driver (+)

- Insert short head screw **(a)** into rear mounting hole in bottom housing and tighten just sufficiently.

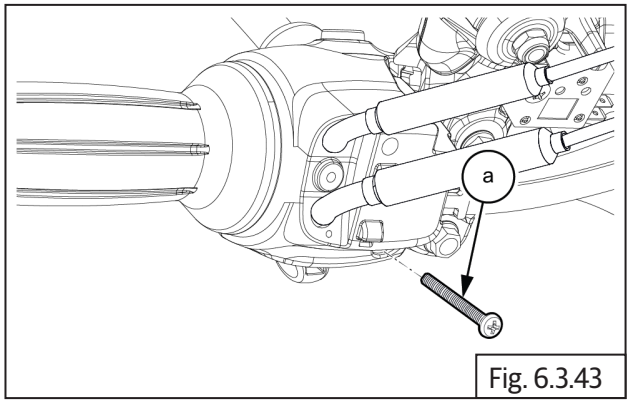

Fig. 6.3.43

	Screw driver (+)

- Check and ensure rotor housing is locked properly in handlebar and free movement of throttle rotor and tighten both screws **(a)** evenly till the housing is tight on the handlebar.

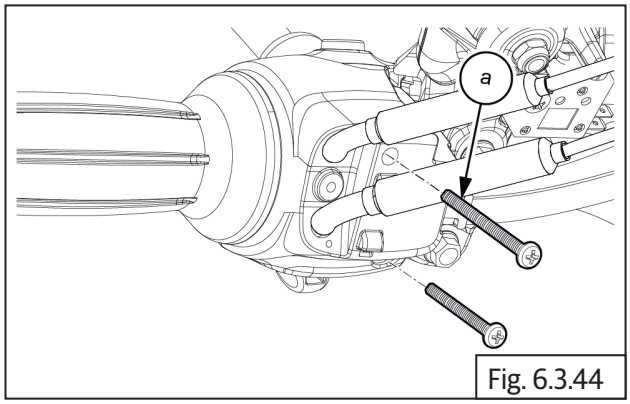

Fig. 6.3.44

	Screw driver (+)
	1.5 - 2 Nm / 0.15 - 0.2 kgf-m

- Connect the brake lamp switch connectors **(a).**

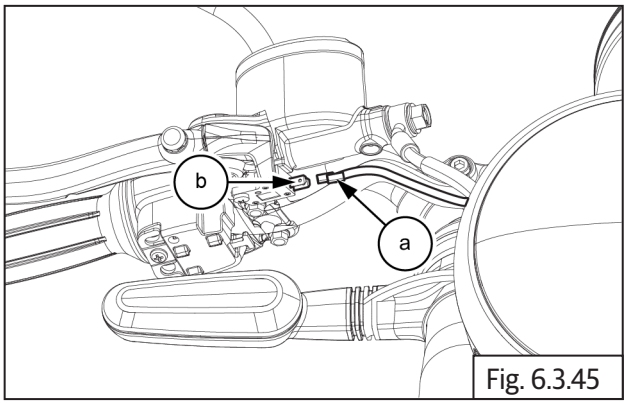

Fig. 6.3.45

- Locate and tighten Hex socket bolt **(M6) (a)** along with balancer **(b)** on handlebar RH.

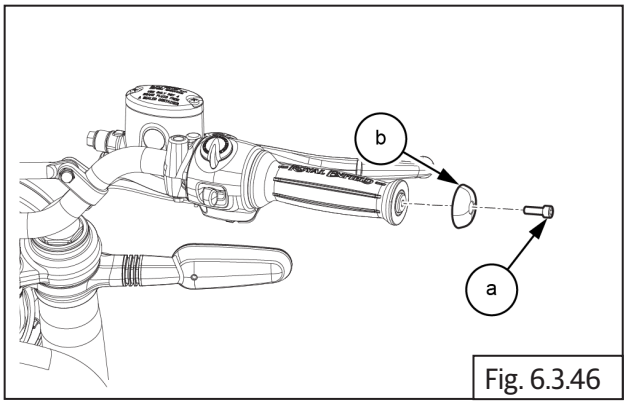

Fig. 6.3.46

	5 mm Allen Socket with Ratchet
	8 - 12 Nm / 0.8 - 1.2 kgfm

⚠ CAUTION

Left hand thread!

DO NOT rotate the mirror after it comes to stop on the bracket as it will cause the bracket to crack.

Always position mirror and lock in place with rider seated on the motorcycle.

- Ensure lock nut on mirror RH **(a)** stem is fully tightened.
- Locate thread portion of rear view mirror stem on threads on master cylinder bracket, rotate clockwise till mirror comes to stop.
- Rotate mirror clockwise for adjusting the view and tighten lock nut **(M10) (b)** against bracket.
- Close the rubber boot.

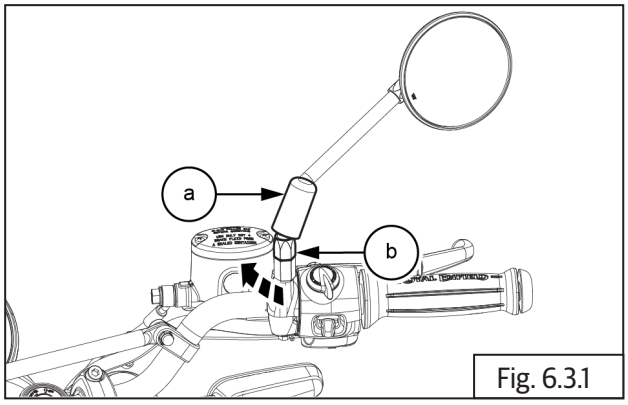

Fig. 6.3.1

	16 mm Double end spanner
	24 Nm / 2.4kgfm

- Ensure lock nut on mirror LH **(a)** stem is fully tightened.
- Locate thread portion of rear view mirror stem on threads on master cylinder bracket, rotate anti clockwise till mirror comes to stop.
- Rotate mirror clockwise for adjusting the view and tighten lock nut **(M10) (b)** against bracket.
- Close the rubber boot.

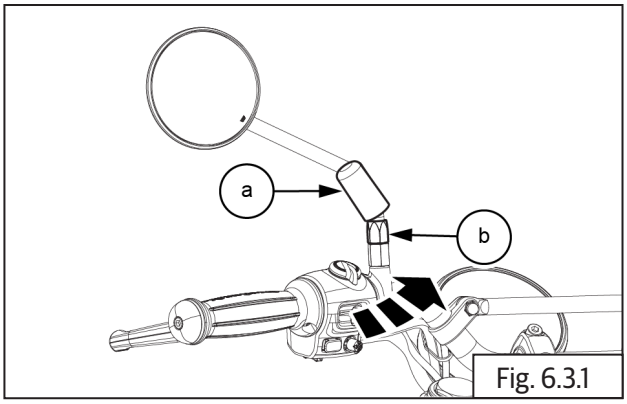

Fig. 6.3.1

	16 mm Double end spanner
	24 Nm / 2.4kgfm

Troubleshooting

Symptom	Possible Cause	Diagnosis	How to Fix	Recommended Specification
Vibrations transmitted to rider while riding	Tyre pressures are more than recommended.	Improper front and rear tyre pressures.	Ensure correct tyre pressures.	**Solo:** **Front tyre:** 32 psi/2.2 kg/cm^2 **Rear tyre:** 36 psi/2.5 kg/cm^2 **With Pillion:** **Front tyre:** 32 psi/2.2 kg/cm^2 **Rear tyre:** 42 psi/2.9 kg/cm^2
	Handlebar balancers are loose.	Balancer mountings are loose/threads are worn-out.	Tighten balancer mountings/replace balancers.	**Torque**: 8 - 12 Nm / 0.8 - 1.2 kgfm
	Clip-on pinch bolts are loose on fork main tubes. Handlebar clamp fasteners are loose on top yoke.	Fasteners loose/ threads worn-out	Check and tighten fasteners/ replace fasteners/ handlebar clip-ons/ top yoke	**Torque**: 38 - 42 Nm / 3.8 - 4.2 kgf-m **Torque**: 23 - 27 Nm / 3.8 - 4.2 kgf-m
	Handlebar is cracked at mounting location.	Clip-on/handlebar clamping locations has minor cracks.	Replace clip-ons/ handlebar	
Uneasiness/pain felt on one shoulder	Clip-on/s are bent. Handlebar is bent/ misaligned.	One or the other clip-on is bent/ handlebar is bent. Handlebar alignment dots are not correct.	Replace clip-ons/ handlebar. Ensure correct positioning of the handlebar alignment dots with respect to top yoke.	

NOTE
• *The troubleshooting given in this section is only related to issues with Handlebar. For complaints like unstable riding, wobbling, etc., it will be necessary to check other aggregates like wheel, front/rear suspension and so on.*

EXHAUST PIPES AND SILENCER

CONTENTS **PAGE**

6.4. Exhaust Pipes and Silencer 384

Dismantling..... 384

6.4.1. Hego Sensor / Oxygen Sensor Connectors..... 384

6.4.2. Silencer 384

6.4.3. CAT Box..... 386

6.4.4. Exhaust Pipe 387

6.4.5. Header Gasket 389

6.4.6. Hego/Oxygen Sensor (LHS Exhaust pipe) 389

6.4.7. Hego/Oxygen Sensor (RHS Exhaust pipe)..... 389

6.4.8. Hego/Oxygen Sensor (CAT box) 390

Assembly 390

6.4.9. Hego/Oxygen Sensor (CAT box) 390

6.4.10. Hego/Oxygen Sensor (RHS Exhaust pipe) 390

6.4.11. Hego/Oxygen Sensor (LHS Exhaust pipe)..... 391

6.4.12. Header Gasket 391

6.4.13. Exhaust Pipe RHS..... 391

6.4.14. CAT Box..... 393

6.4.15. Silencer 394

6.4.16. Hego Sensor / Oxygen Sensor Connectors..... 396

6.4.17. Troubleshooting..... 397

6.4. Exhaust Pipes and Silencer

⚠ CAUTION

DO NOT perform any operation on exhaust pipes and silencers soon after the motorcycle is OFF.

They can extremely hot and will cause serious injuries.

Always wait until the silencer is completely cooled down.

Dismantling

⚠ CAUTION

Be careful while connecting and disconnecting the electrical couplers. Do not damage the couplers pins.

6.4.1. Hego Sensor / Oxygen Sensor Connectors

Prior Removal:

- Park the vehicle on a secure place.
- Ensure ignition and stop switch are in off position.
- Disconnect the battery terminals.
- Detach the omega clips **2Nos (a)** from LHS and RHS Oxygen Sensor wiring harness.

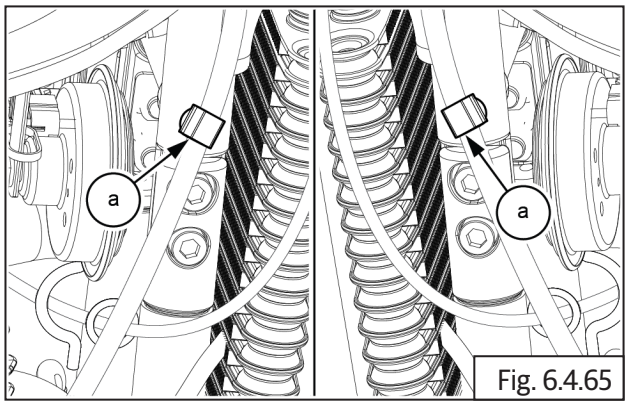

Fig. 6.4.65

- Disconnect Oxygen Sensor sensor connectors **(a)** from both LHS and RHS on the front side of engine.

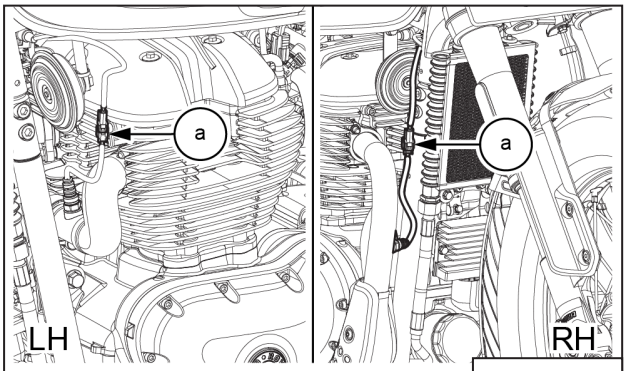

Fig. 6.4.66

- Disconnect the CAT box Oxygen Sensor coupler **(a)**.

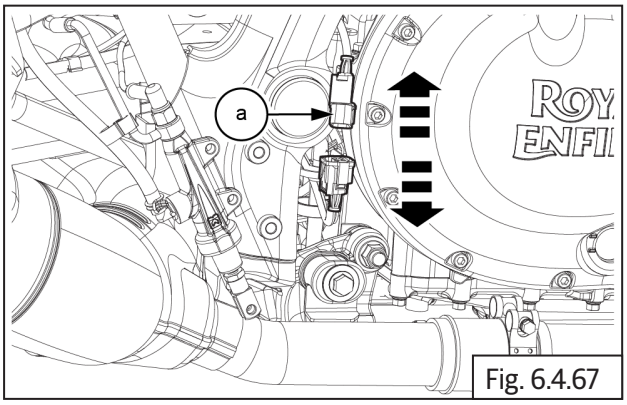

Fig. 6.4.67

6.4.2. Silencer

- Loosen and remove **2 Nos** button head bolts **(M6) (a)** from rear Silencer guard.

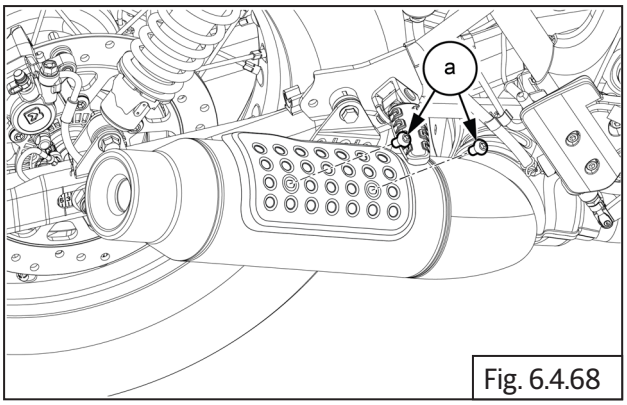

Fig. 6.4.68

	4 mm Allen Socket with Ratchet

- Remove Silencer guard **(a)** from silencer.

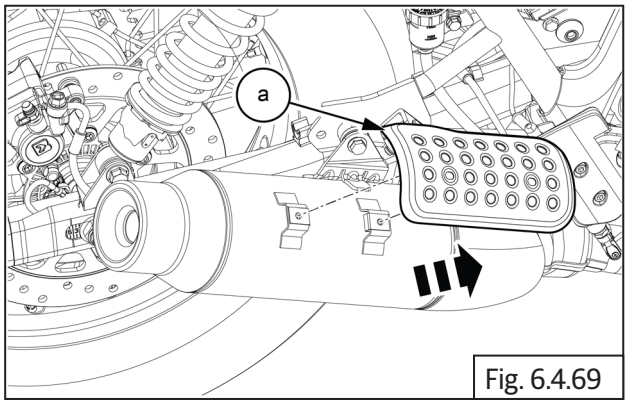

Fig. 6.4.69

- Detach the **2Nos** clip nuts **(a)** from silencer.

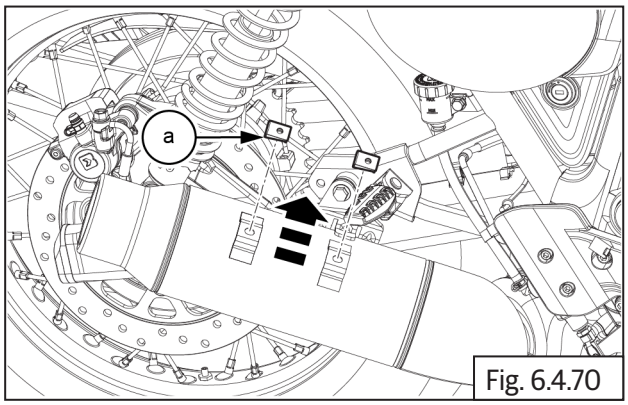

Fig. 6.4.70

- Loosen the hex flange bolt **(M8) (a)** from mounting clamp.

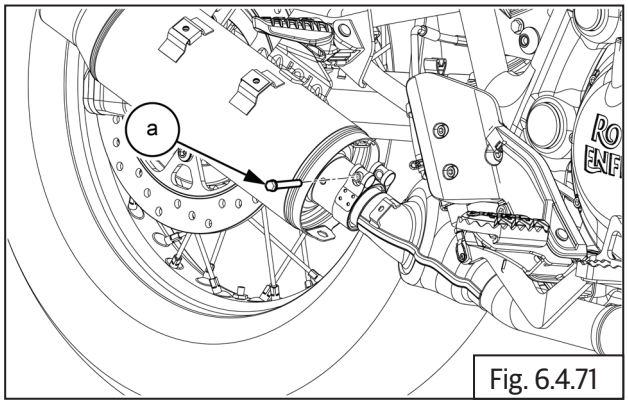

Fig. 6.4.71

	12 mm socket with ratchet

- Loosen and remove the flanged hex domed cap bolt **(M8) (a)** and flange U nut **(M8) (d)** along with **2 Nos** pins **(b)** and **2 Nos** dampers **(c)** from silencer.

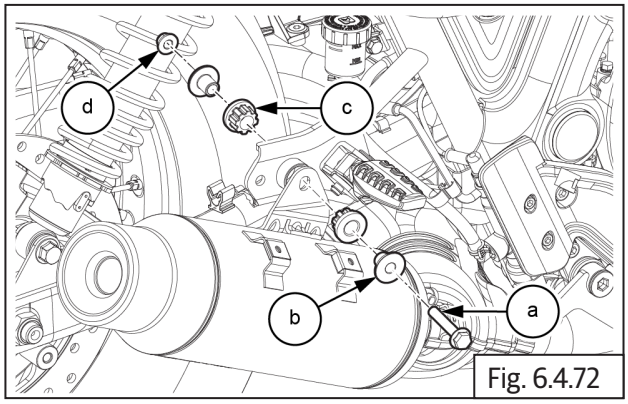

Fig. 6.4.72

	12 mm socket with ratchet

- Gently tap and pull the silencer **(a)** outwards to remove.

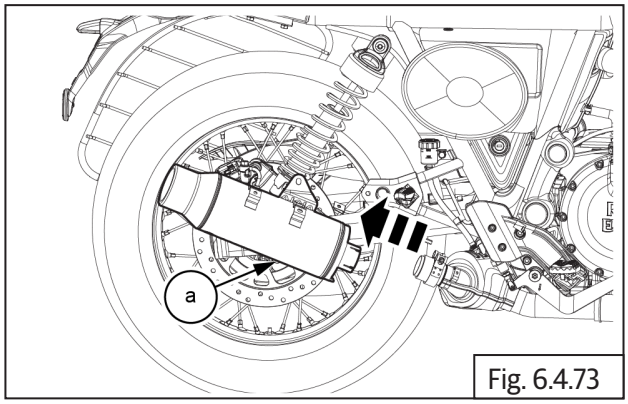

Fig. 6.4.73

	Mallet

- Remove the gasket **(a)** from Silencer and Discard it.

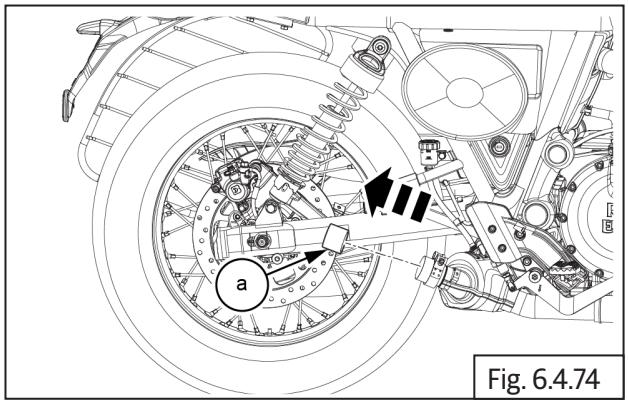

Fig. 6.4.74

NOTE
• *Do not reuse the gaskets, Renew all the gaskets.*

6.4.3. CAT Box

- Loosen hex flange bolt **(M8) (a)** from mounting clamp.

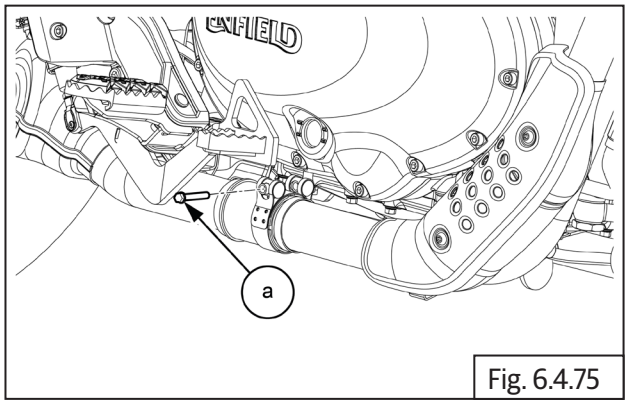

Fig. 6.4.75

	12 mm Socket with Ratchet

- Remove the **2 Nos** cap flange bolts **(M8) (a)** from the RH control plate to access the CAT box mounting bolts.

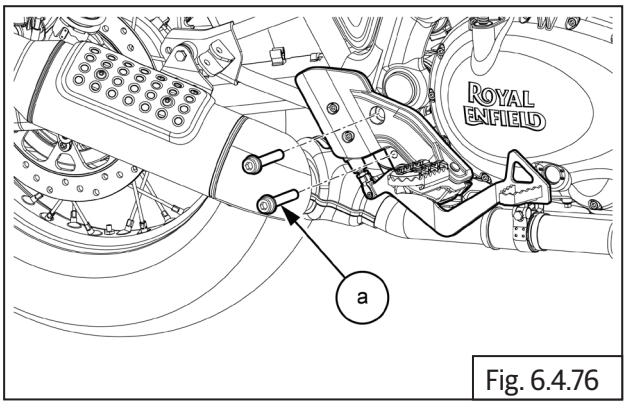

Fig. 6.4.76

	6 mm Allen Socket with Ratchet

- Loosen and remove the mounting flanged hex domed cap bolt **(M8) (a)** along with **2 Nos** pins **(b)** and washers **(c)** from RHS cat box.

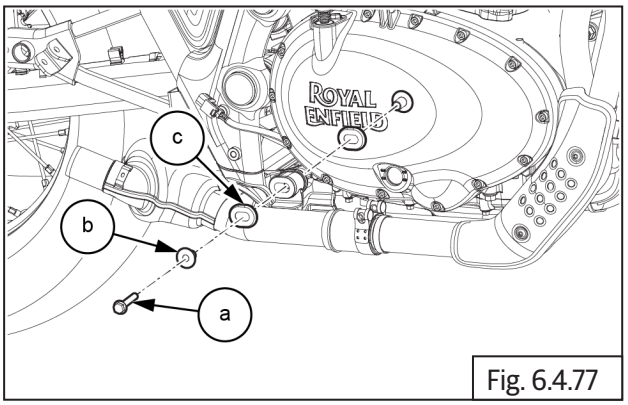

Fig. 6.4.77

	12 mm Socket with Ratchet

- Loosen and remove the mounting flanged hex bolt **(M8) (a)** along with **2 Nos** pins **(b)** and damper **(c)** from LHS CAT box.

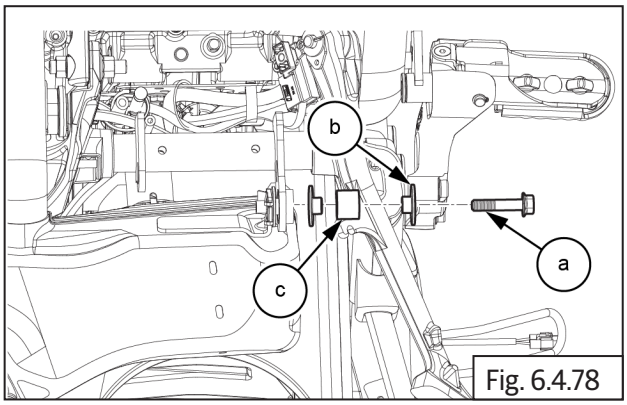

Fig. 6.4.78

	12 mm Socket with Ratchet

- Gently tap and pull the CAT box **(a)** outwards to remove.

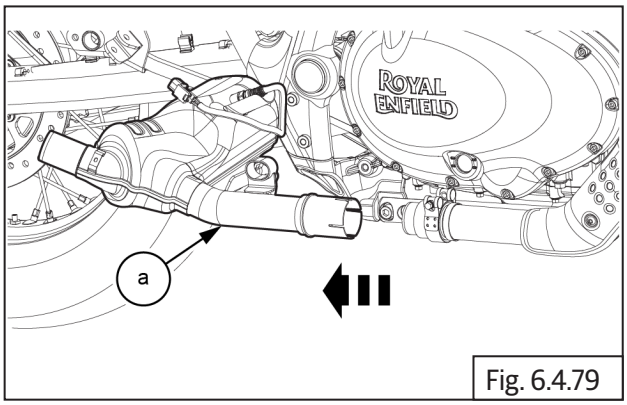

Fig. 6.4.79

	Mallet

- Remove the gasket **(a)** from CAT box and Discard it.

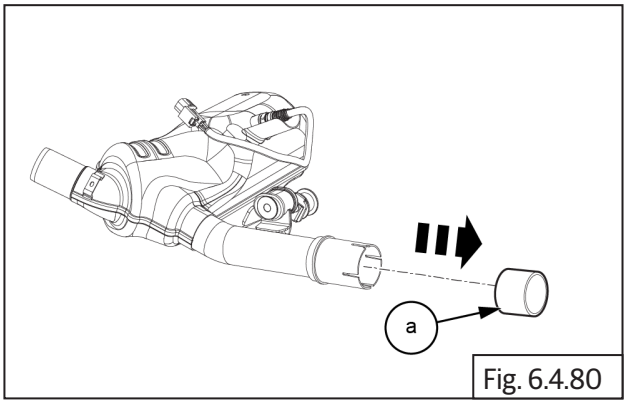

Fig. 6.4.80

NOTE
• *Do not reuse the gaskets, Renew all the gaskets.*

- Remove the damper **(a)** from CAT box.

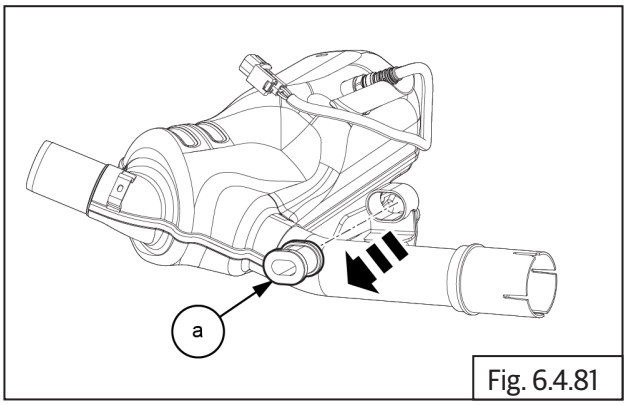

Fig. 6.4.81

6.4.4. Exhaust Pipe

- Loosen and remove **2 Nos** flange U nuts **(M8) (a)** from the exhaust pipe LH

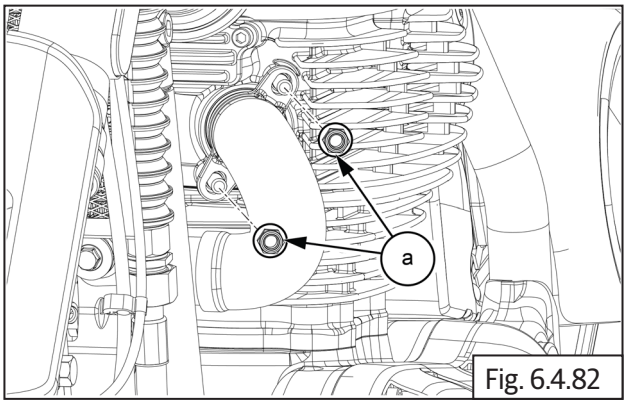

Fig. 6.4.82

	12 mm Socket with Ratchet

- Loosen hex flange bolt **(M8) (a)** from mounting clamp.

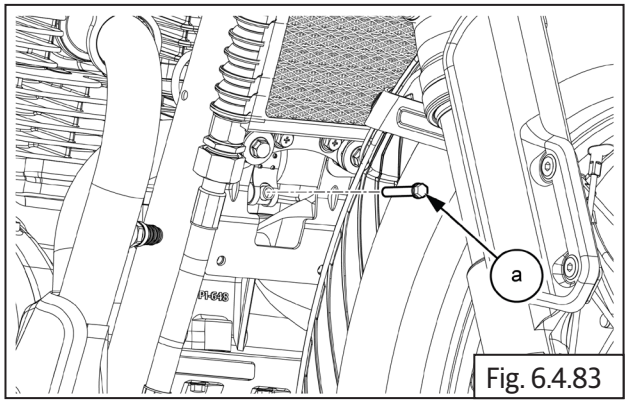

Fig. 6.4.83

	12 mm Socket with Ratchet

- Remove the LH exhaust pipe **(a)** from cylinder head.

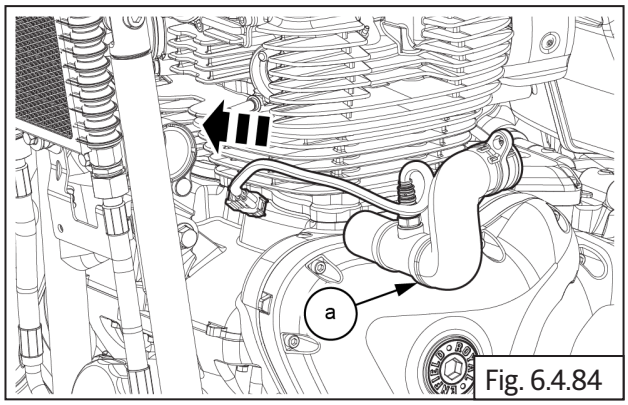

Fig. 6.4.84

- Loosen and remove **2 Nos** flange U nuts **(M8) (a)** from the Exhaust pipe RH

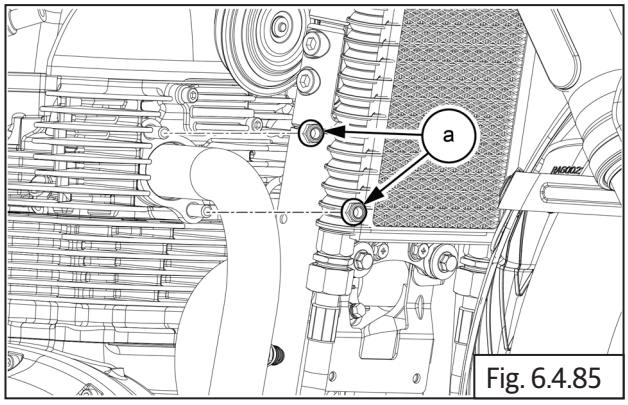

Fig. 6.4.85

	12 mm Socket with Ratchet

- Slightly slide forward and move the flange **(a)** from the Exhaust pipe RH.

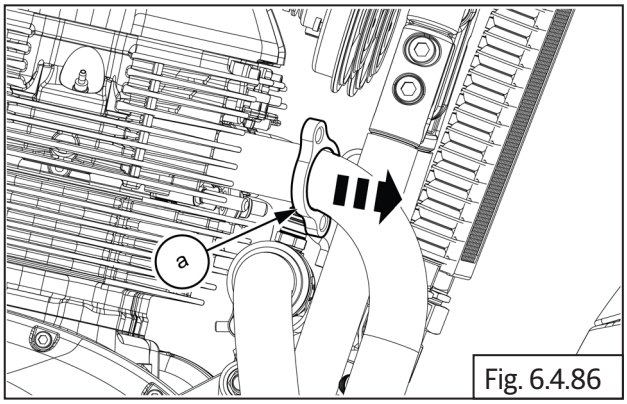

Fig. 6.4.86

- Remove the RH exhaust pipe **(a)** from cylinder head.

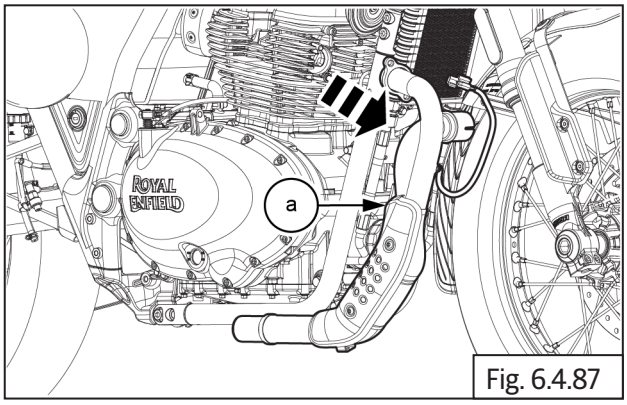

Fig. 6.4.87

- Remove the **2Nos** flanged hex domed cap bolts **(M8) (a)** from pre CAT guard.

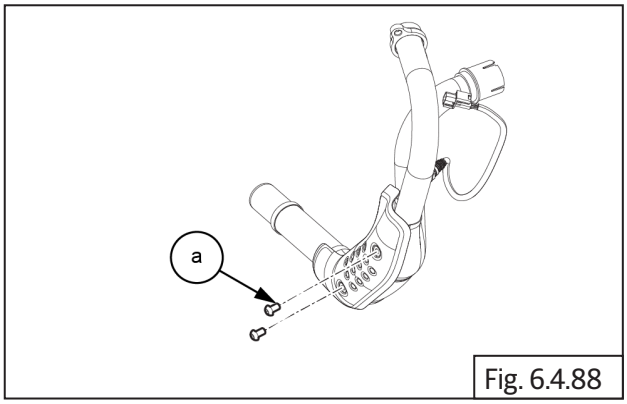

Fig. 6.4.88

	4 mm Allen Socket with Ratchet

- Remove the pre CAT guard **(a)** from RH exhaust pipe.

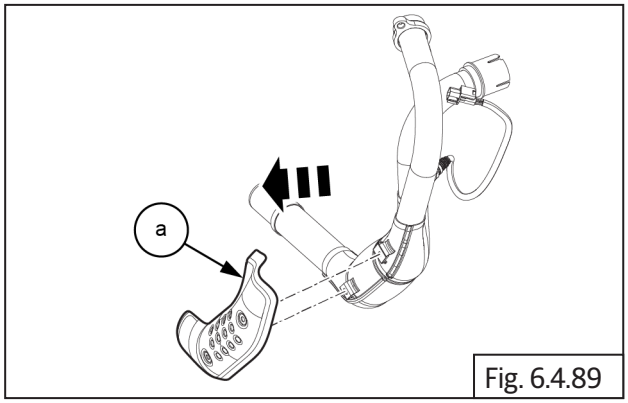

Fig. 6.4.89

- Detach the **2Nos** clip nuts **(a)** from RH exhaust pipe.

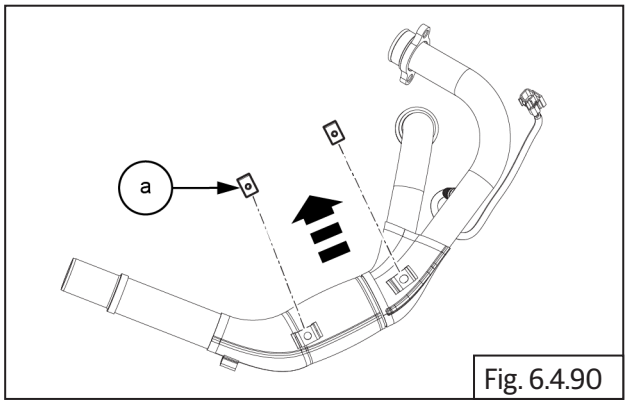

Fig. 6.4.90

6.4.5. Header Gasket

- Remove header gasket **(a)** from LHS and RHS cylinder head.

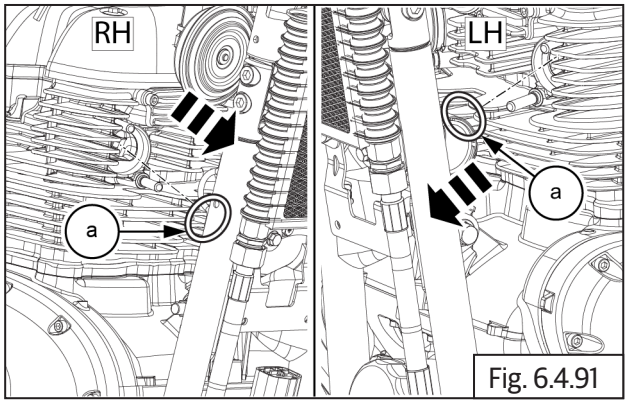

Fig. 6.4.91

	Flat Head Screw Driver and Mallet

NOTE
• *Do not reuse the gaskets, Renew all the gaskets.*

6.4.6. Hego/Oxygen Sensor (LHS Exhaust pipe)

- Gently loosen and remove the Oxygen sensor **(a)** from the exhaust pipe.

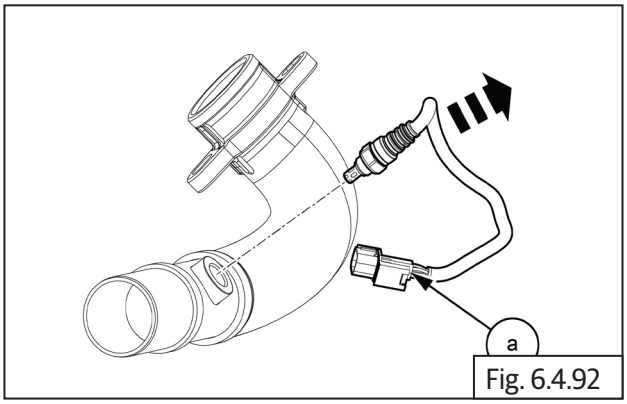

Fig. 6.4.92

	17 mm Combination spanner/Deep groove Socket with Ratchet

6.4.7. Hego/Oxygen Sensor (RHS Exhaust pipe)

- Gently loosen and remove the Oxygen sensor **(a)** from the exhaust pipe.

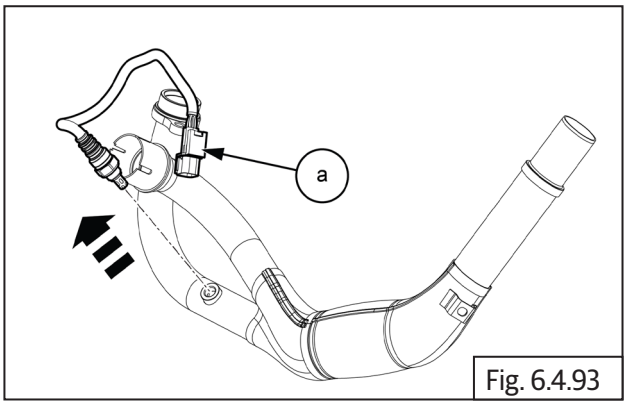

Fig. 6.4.93

	17 mm Combination spanner/Deep groove Socket with Ratchet

6.4.8. Hego/Oxygen Sensor (CAT box)

- Gently loosen and remove the Oxygen sensor **(a)** from the CAT box.

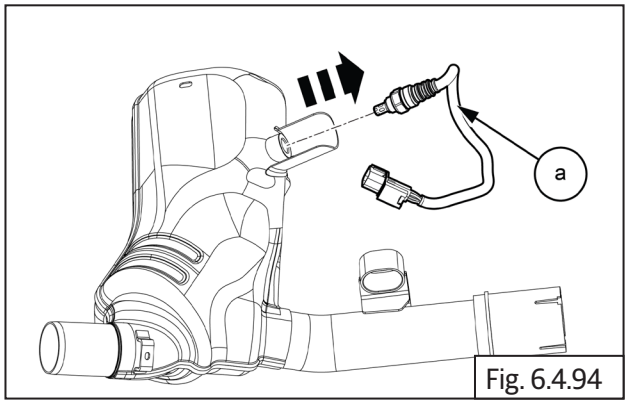

Fig. 6.4.94

	17 mm Combination spanner/Deep groove Socket with Ratchet

Assembly

6.4.9. Hego/Oxygen Sensor (CAT box)

- Locate and tighten Oxygen sensor **(a)** on the CAT box.

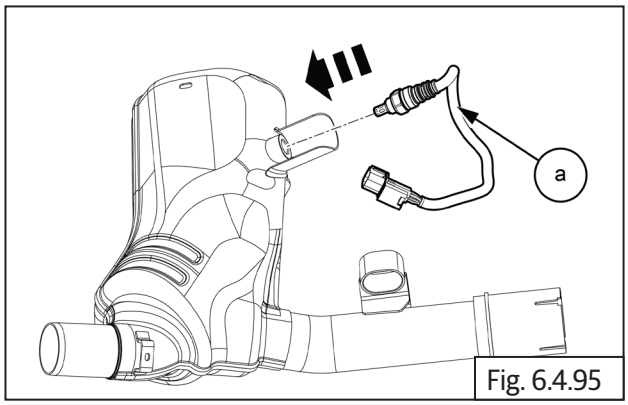

Fig. 6.4.95

	17 mm Combination spanner/Deep groove Socket with Ratchet
	16-20 N-m / 1.6 - 2.0 kgf-m

⚠ CAUTION

DO NOT over tighten as it damages the sensor.

6.4.10. Hego/Oxygen Sensor (RHS Exhaust pipe)

- Locate and tighten Oxygen sensor **(a)** on the exhaust pipe.

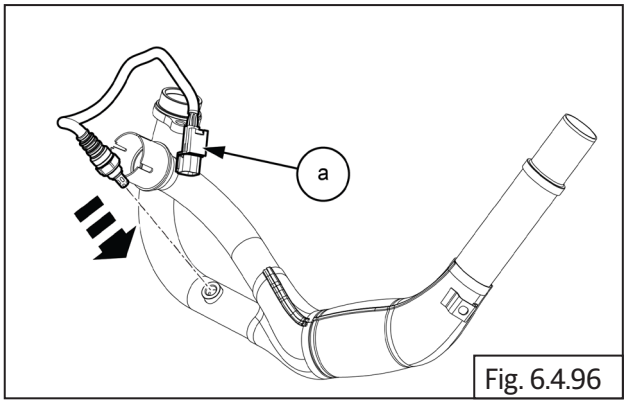

Fig. 6.4.96

	17 mm Combination spanner/Deep groove Socket with Ratchet
	16-20 N-m / 1.6 - 2.0 kgf-m

⚠ CAUTION

DO NOT over tighten as it damages the sensor.

6.4.11. Hego/Oxygen Sensor (LHS Exhaust pipe)

- Locate and tighten Oxygen sensor **(a)** on the LHS exhaust pipe.

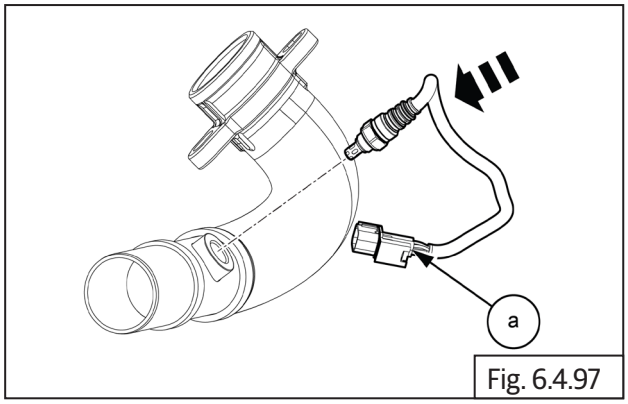

Fig. 6.4.97

	17 mm Combination spanner/Deep groove Socket with Ratchet
	16-20 N-m / 1.6 - 2.0 kgf-m

⚠ CAUTION

DO NOT over tighten as it damages the sensor.

6.4.12. Header Gasket

- Locate header gasket **(a)** into LHS and RHS cylinder head.

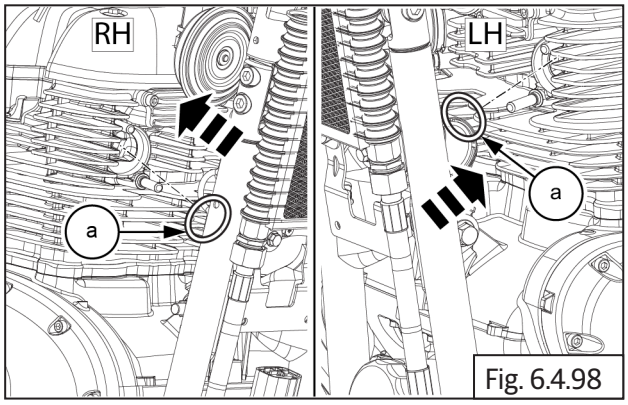

Fig. 6.4.98

NOTE

- *Do not reuse the gaskets, Renew all the gaskets.*

6.4.13. Exhaust Pipe RHS

- Fix the **2Nos** clip nuts **(a)** on RHS exhaust pipe.

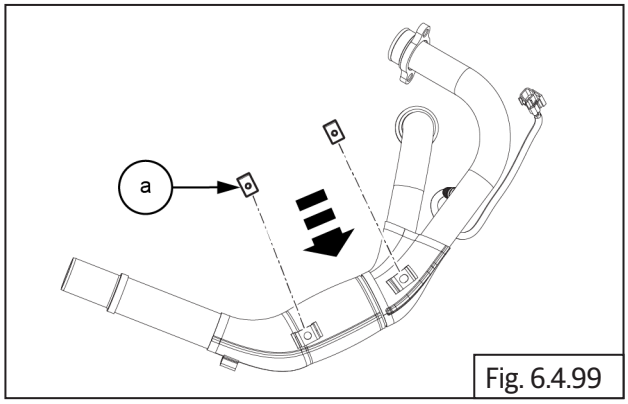

Fig. 6.4.99

- Locate the pre CAT guard **(a)** on RHS exhaust pipe.

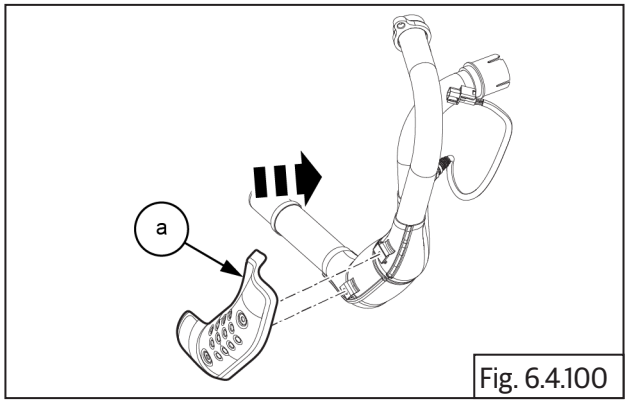

Fig. 6.4.100

- Locate and tighten the **2Nos** flanged hex domed cap bolts **(M8) (a)** on pre CAT guard.

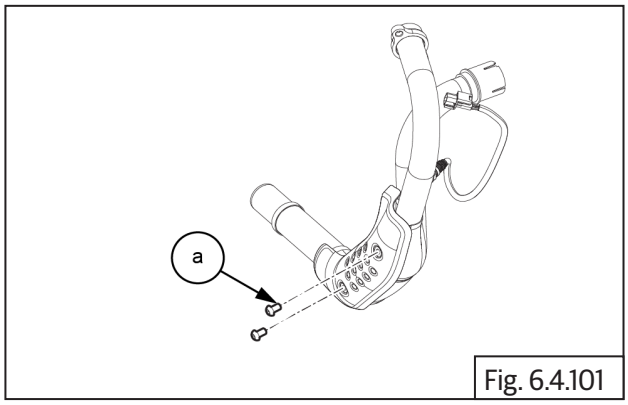

Fig. 6.4.101

	4 mm Allen Socket with Ratchet
	9-12 N-m / 0.9 - 1.2 kgf-m

- Locate the RHS exhaust pipe **(a)** on engine cylinder head.

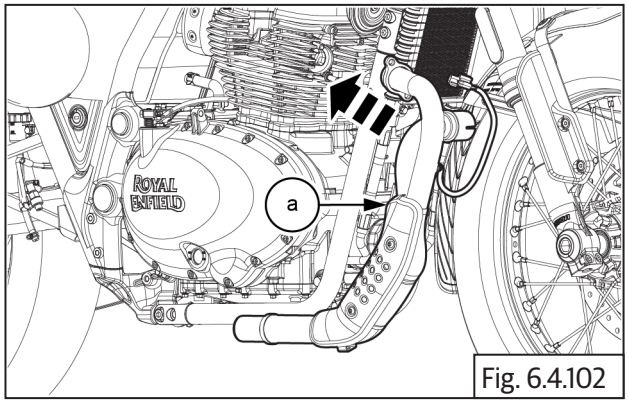

Fig. 6.4.102

- Ensure the RHS exhaust pipe flange **(a)** is properly located on the studs.

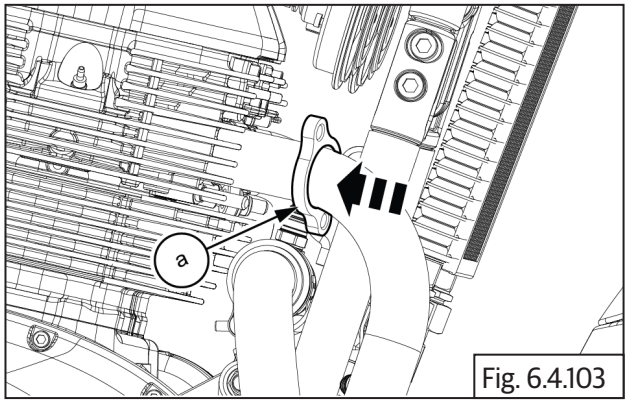

Fig. 6.4.103

- Locate and tighten **2 Nos** flange U nuts **(M8) (a)** on RHS exhaust pipe.

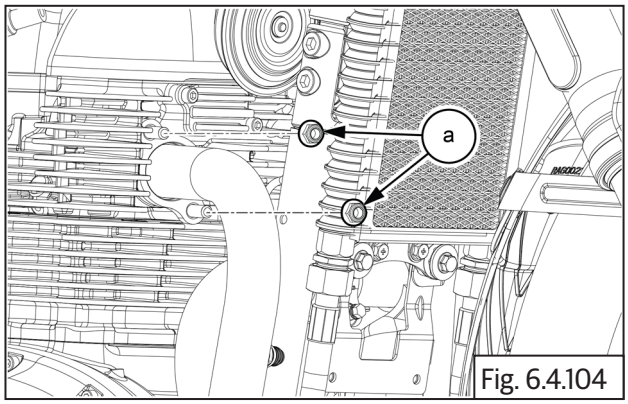

Fig. 6.4.104

	12 mm Socket with Ratchet
	21-29 N-m / 2.1 - 2.9 kgf-m

- Locate the LHS exhaust pipe **(a)** on cylinder head and ensure the LHS exhaust pipe flange is properly located on the studs.

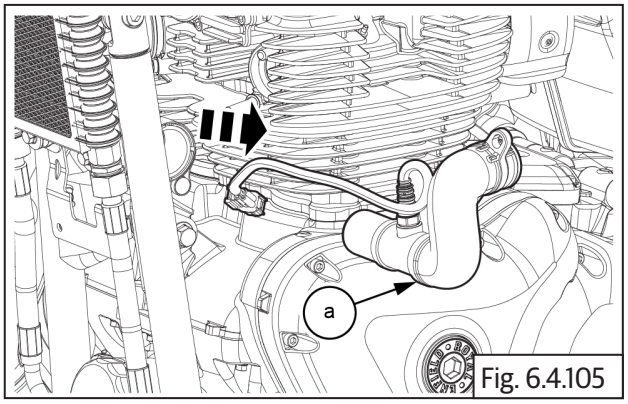

Fig. 6.4.105

- Tighten the hex flange bolt **(M8) (a)** on mounting clamp.

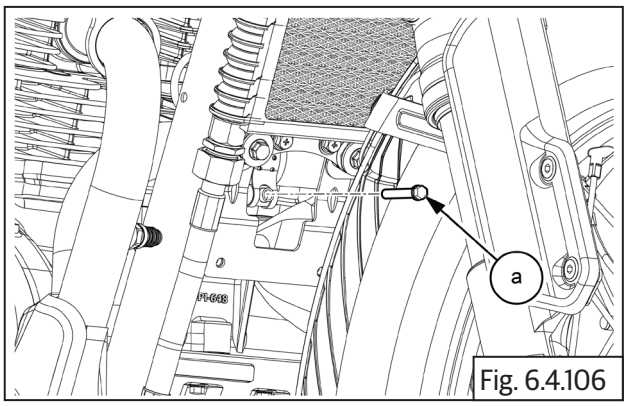

Fig. 6.4.106

	12 mm Socket with Ratchet
	30-34 N-m / 3.0 - 3.4 kgf-m

- Locate and tighten **2 Nos** flange U nuts **(M8) (a)** on LHS exhaust pipe

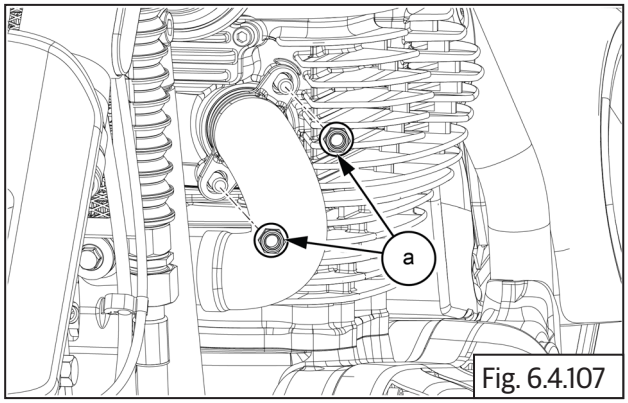

Fig. 6.4.107

	12 mm Socket with Ratchet
	21-29 N-m / 2.1 - 2.9 kgf-m

6.4.14. CAT Box

- Install the damper **(a)** into the CAT box.

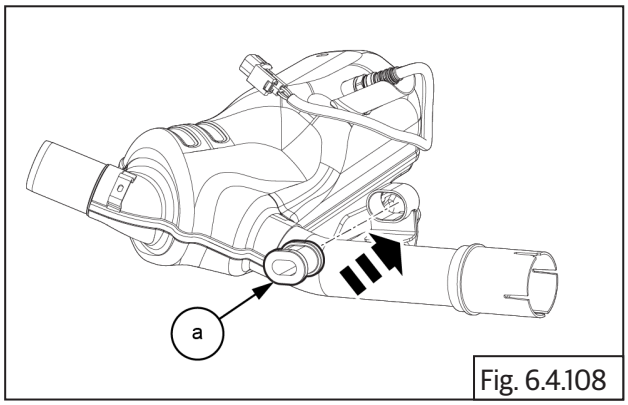

Fig. 6.4.108

- Place the new gasket **(a)** onto the CAT box.

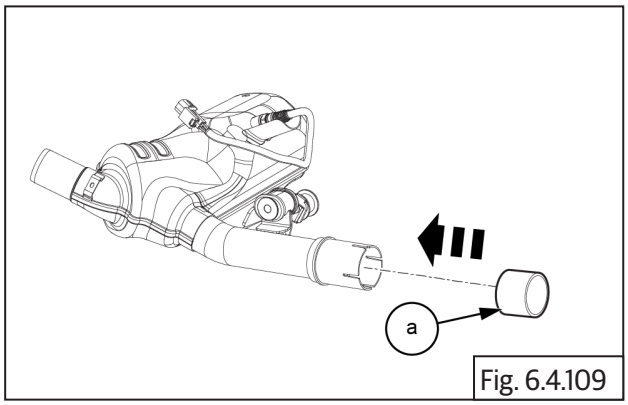

Fig. 6.4.109

NOTE
• *Do not reuse the gaskets, Renew all the gaskets.*

- Insert the CAT box **(a)** back into position by gently pushing it inwards.

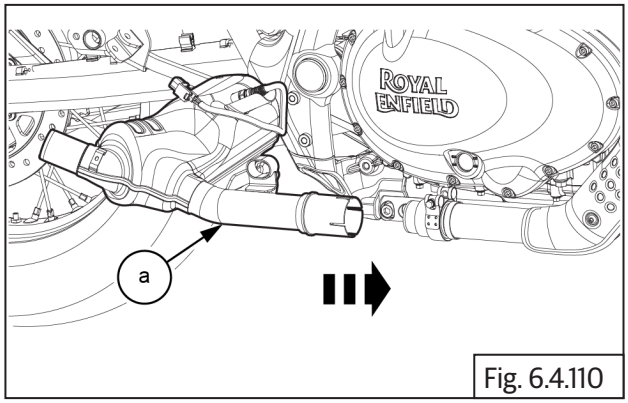

Fig. 6.4.110

	Mallet

- Install the mounting flanged hex bolt **(M8) (a)** along with **2 Nos** pins **(b)** and damper **(c)** onto the LHS CAT box.

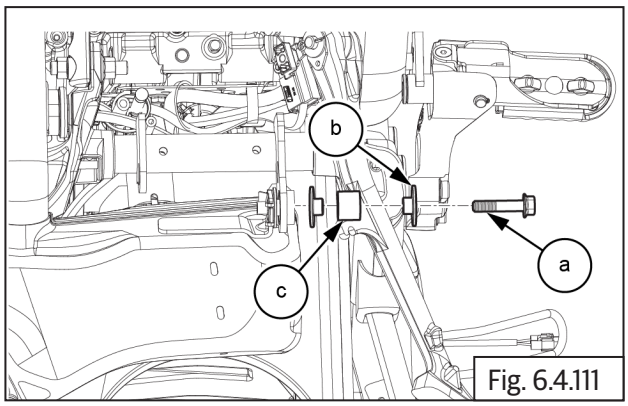

Fig. 6.4.111

	12 mm Socket with Ratchet
	30-34 N-m / 3.0 - 3.4 kgf-m

- Install the mounting flanged hex domed cap bolt **(M8) (a)** along with **2 Nos** pins **(b)** and washers **(c)** onto the RHS CAT box.

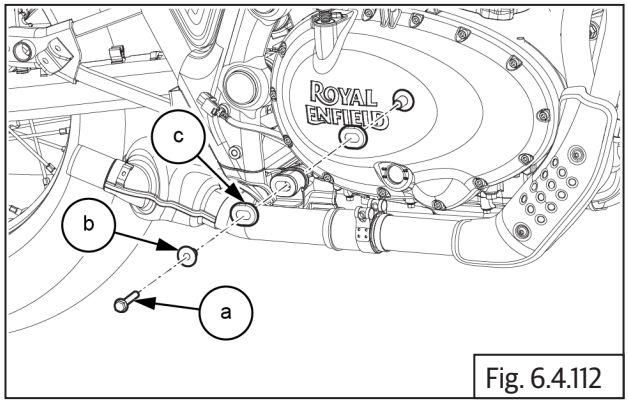

Fig. 6.4.112

	12 mm Socket with Ratchet
	21-29 N-m / 2.1 - 2.9 kgf-m

- Locate and tighten the **2 Nos** cap flange bolts **(M8) (a)** on the RHS control plate.

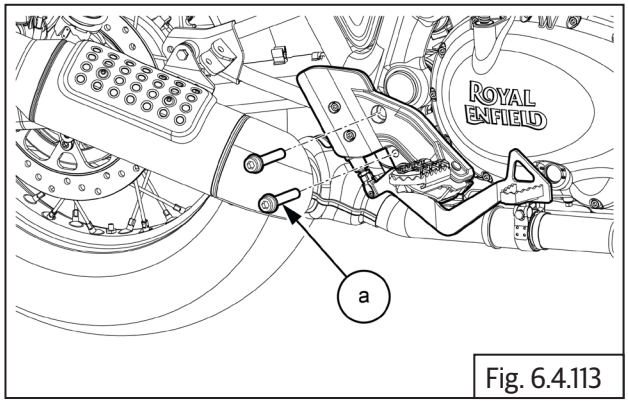

Fig. 6.4.113

	6 mm Allen Socket with Ratchet
	18-22 N-m / 1.8 - 2.2 kgf-m

- Locate and tighten the hex flange bolt **(M8) (a)** on the mounting clamp to secure the CAT box in place.

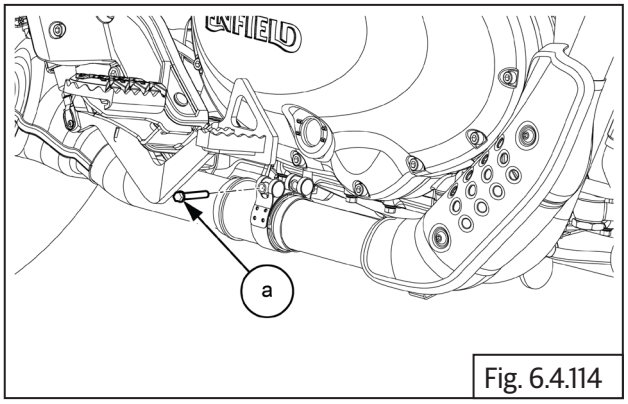

Fig. 6.4.114

	12 mm Socket with Ratchet
	30-34 N-m / 3.0 - 3.4 kgf-m

6.4.15. Silencer

- Insert the new gasket **(a)** onto the silencer.

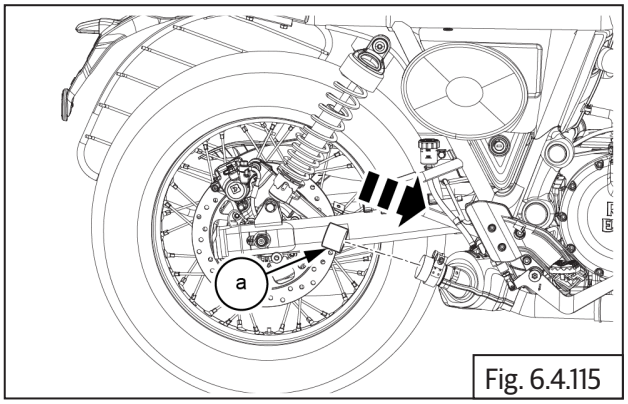

Fig. 6.4.115

NOTE
• *Do not reuse the gaskets, Renew all the gaskets.*

- Insert the silencer **(a)** back into position by gently pushing it inwards.

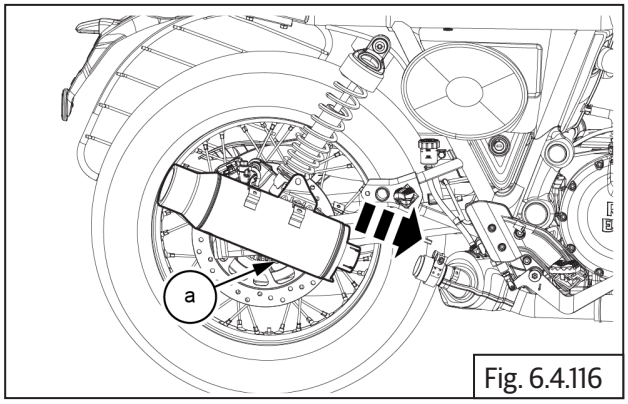

Fig. 6.4.116

	Mallet

- Locate and tighten the flanged hex domed cap bolt **(M8) (a)** and flange U nut **(M8) (d)** along with **2 Nos** pins **(b)** and **2 Nos** dampers **(c)** to secure the silencer.

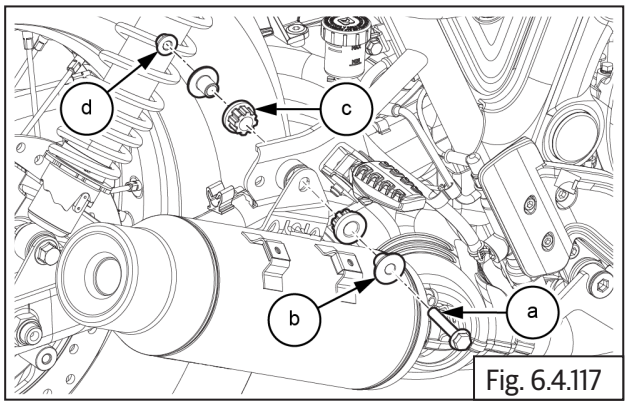

Fig. 6.4.117

	12 mm Socket with Ratchet
	21-29 N-m / 2.1 - 2.9 kgf-m

- Tighten the hex flange bolt **(M8) (a)** on mounting clamp.

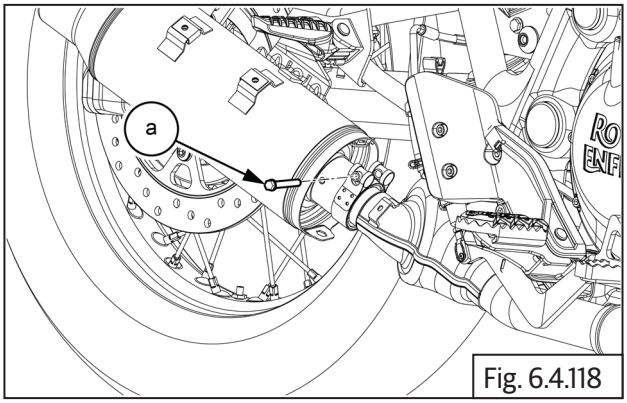

Fig. 6.4.118

	12 mm Socket with Ratchet
	30-34 N-m / 3.0 - 3.4 kgf-m

- Fix the **2Nos** clip nuts **(a)**on silencer.

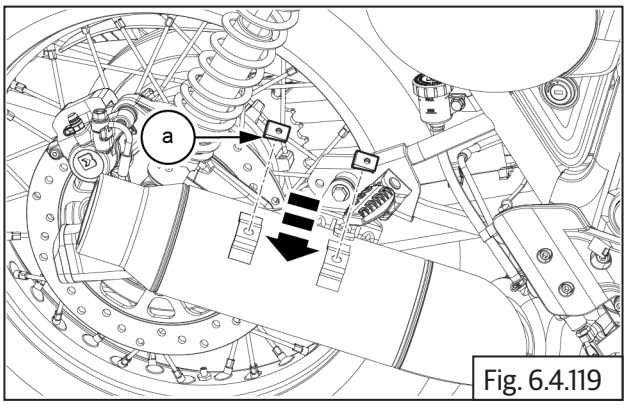

Fig. 6.4.119

- Locate the Silencer guard **(a)** silencer.

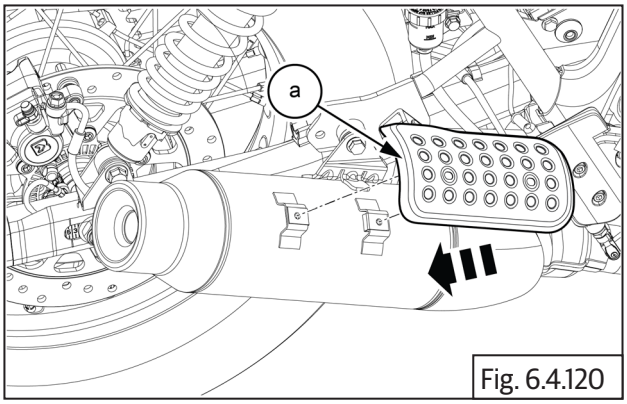

Fig. 6.4.120

6.4.16. Hego Sensor / Oxygen Sensor Connectors

- Connect the CAT box Oxygen Sensor coupler **(a)**.

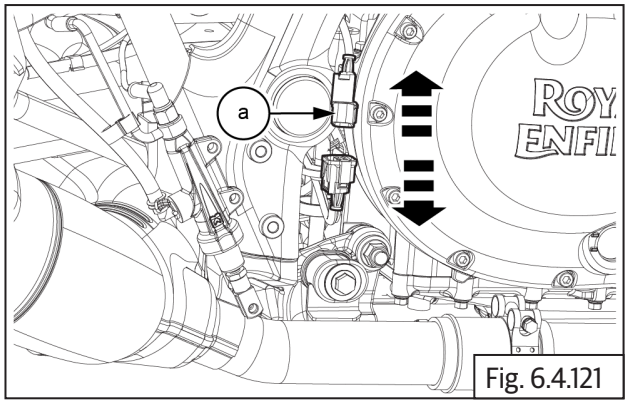

Fig. 6.4.121

- Connect the Oxygen Sensor sensor connectors **(a)** to both LHS and RHS on the front side of the engine.

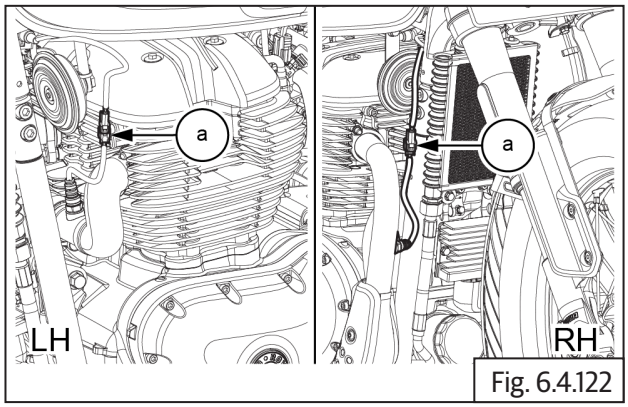

Fig. 6.4.122

- Fix the omega clips **2Nos (a)** to the LHS and RHS Oxygen Sensor wiring harness.

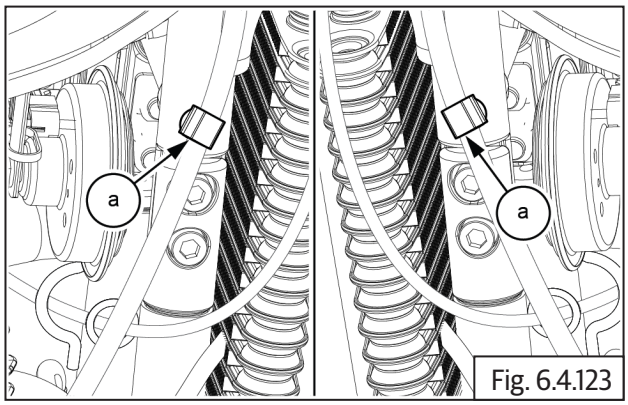

Fig. 6.4.123

- Connect the battery terminals. (Refer_____).

6.4.17. Troubleshooting

Symptom	Possible Cause	Diagnosis	How to Fix	Recommended Specification
Vibration/rattling noise from exhaust pipes.	Exhaust pipe mounting to cylinder head LH/RH is loose.	Exhaust pipe/s flange mounting to cylinder head is loose/flange is cracked.	Check and tighten flange mounting to torque. Replace exhaust pipes, if flange is cracked.	Torque 21 - 29 N-m / 2.1 - 2.9 kgf-m
	Exhaust pipe mounting to frame LH/RH is loose.	Fasteners are loose/ mounting clamps are cracked.	Check and tighten fasteners to torque. Replace clamps, if cracked.	Torque 21 - 29 N-m / 2.1 - 2.9 kgf-m
Vibration/rattling noise from silencer.	Silencer mounting to frame LH/RH is loose.	Fasteners are loose/mounting clamps are cracked.	Check and tighten fasteners to torque Replace clamps/ silencer, if cracked.	Torque 30-34 N-m / 3.0 - 3.4 kgf-m
	Internal baffles in silencer are broken.	Remove silencer and shake to check if internal baffles are cracked.	Replace silencer assembly.	
Exhaust leak from cylinder head joint/ silencer joint.	Gaskets are burnt/ missing.	Gaskets are burnt-out due to loose clamping of exhaust pipe/ silencer.	Replace exhaust pipe/silencer gaskets.	

NOTE
• *The troubleshooting given in this section is only related to issues with noise/leak in the exhaust system. For complaints related to poor pickup, misfiring, etc., please refer to engine section.*

FOOTRESTS/STANDS/SAREE GUARD

CONTENTS **PAGE**

6.5. Footrests/Stands/Saree Guard 391

Dismantling 391

6.5.1. Rider Footrest 392

6.5.2. Control Plate (RHS) 392

6.5.3. Control Plate (LHS) 393

6.5.4. Pillion Footrest 394

6.5.5. Saree Guard (For Indian Market Only) 395

6.5.6. Lift Handle 395

6.5.7. Side Stand 396

6.5.8. Center Stand (optional) 398

Inspection 399

Assembly 399

6.5.9. Center Stand (optional) 399

6.5.10. Side Stand 400

6.5.11. Lift Handle 402

6.5.12. Saree Guard (For Indian Market Only) 403

6.5.13. Pillion Footrest 403

6.5.14. Control Plate (LHS) 404

6.5.15. Control Plate (RHS) 406

6.5.16. Rider Footrest 407

6.5. Footrests/Stands/Saree Guard

⚠ CAUTION

Ensure the motorcycle is upright on a firm and flat surface.

Dismantling

6.5.1. Rider Footrest

- Remove the circlip **(a)** at the bottom of the RHS footrest.

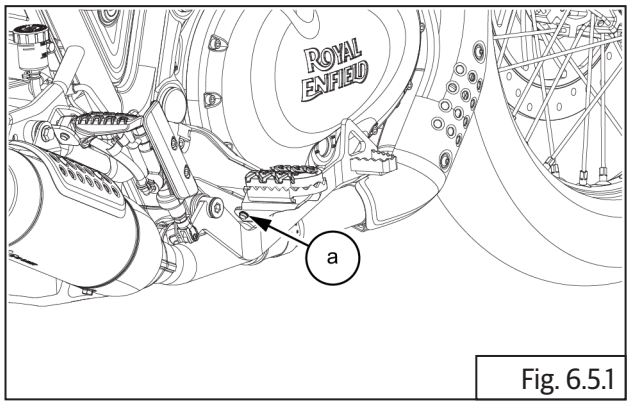

Fig. 6.5.1

	Circlip Expander

- Gently pull out clevis pin **(a)** from footrest housing top, duly supporting footrest .

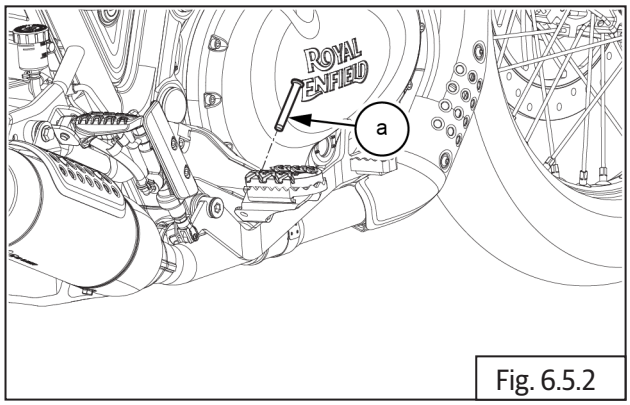

Fig. 6.5.2

	Nose plier

⚠ CAUTION

Spring is loaded. Support footrest while removing/reassembly

- Remove footrest **(a)** and spring **(b)** from control plate.

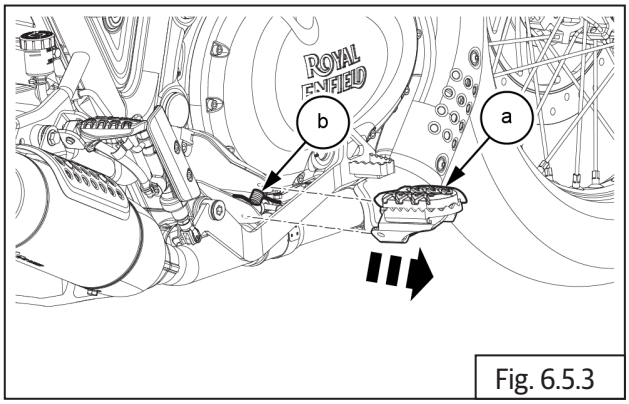

Fig. 6.5.3

- Remove the rubber **(a)** from footrest **(b)**.

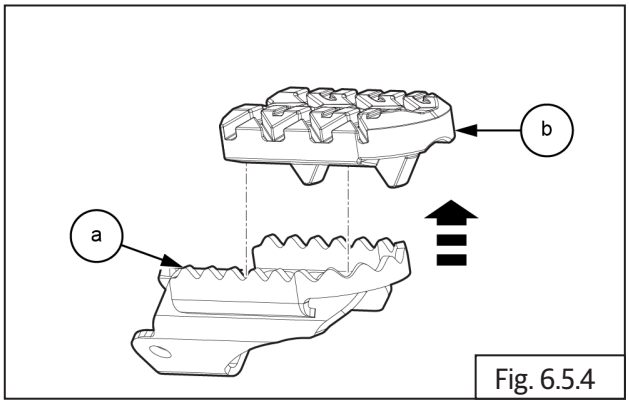

Fig. 6.5.4

- Repeat the same rider footrest removal procedure to LHS footrest **(a)**.

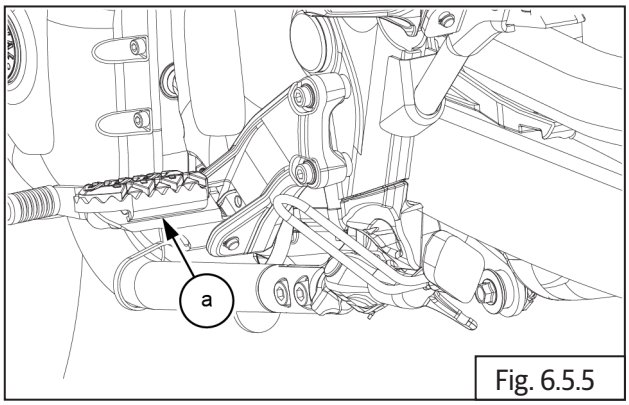

Fig. 6.5.5

6.5.2. Control Plate (RHS)

- Remove clevis spring pin **(a)** from rear master cylinder.

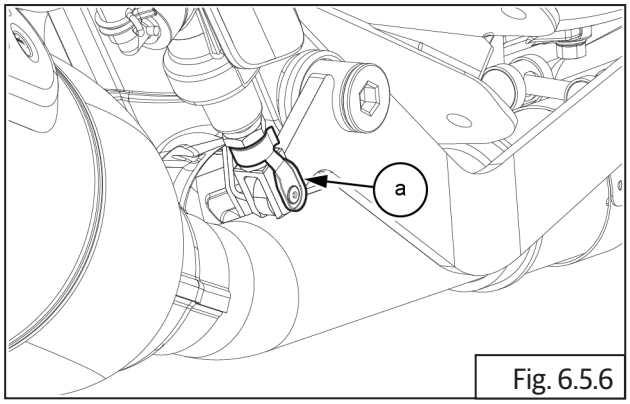

Fig. 6.5.6

	Nose plier

- Loosen and remove 2 Nos cap bolts **(M6) (a)** from master cylinder .

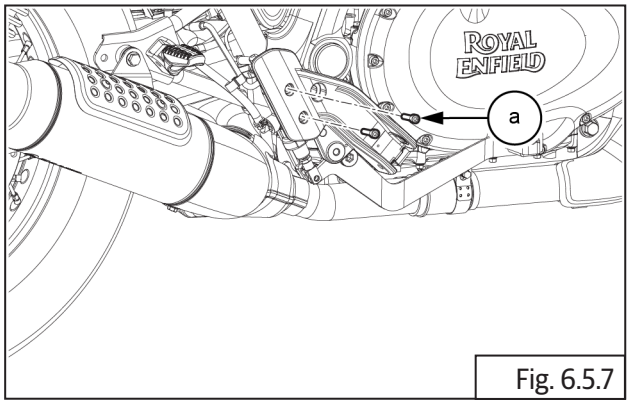

Fig. 6.5.7

	5 mm Allen Socket with Ratchet

- Loosen and remove 2 Nos cap bolts **(M8) (a)** from control plate .

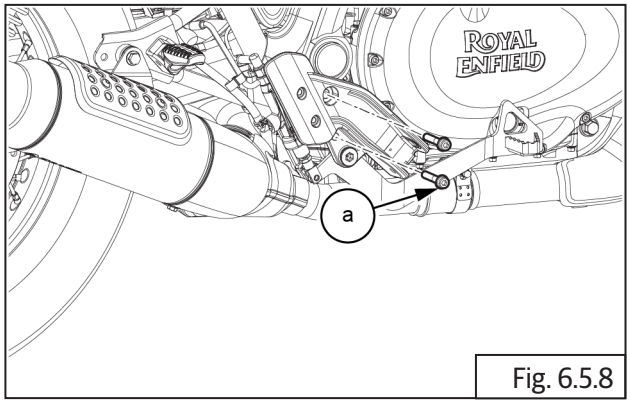

Fig. 6.5.8

	6 mm Allen Socket with Ratchet

- Remove the control plate with brake pedal **(a)** from frame.

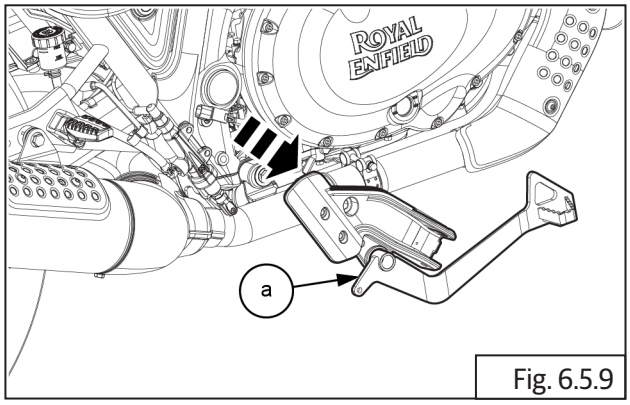

Fig. 6.5.9

- Remove pivot pin **(b)** from brake pedal **(a)**.
- Remove brake pedal **(a)** along with bush **(c)** and spring **(d)** from control plate.

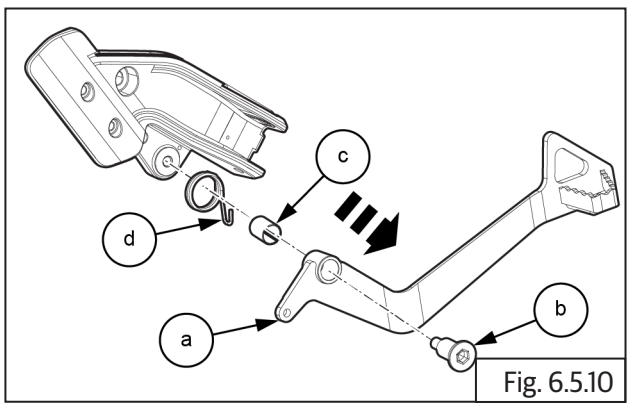

Fig. 6.5.10

	8 mm Allen Socket with Ratchet

- Loosen and remove the countersunk screw **(M6) (a)** from control plate .
- Remove the stopper plate from control plate **(b).**

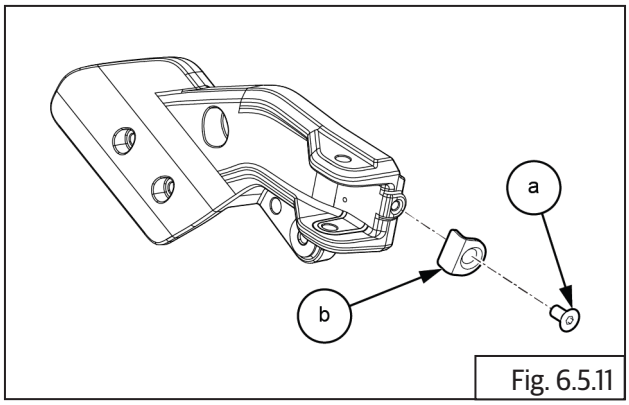

Fig. 6.5.11

	4 mm Allen Socket with Ratchet

6.5.3. Control Plate (LHS)

- Loosen and remove Hex head flange bolt **(M6) (a)** from gear change clamp.

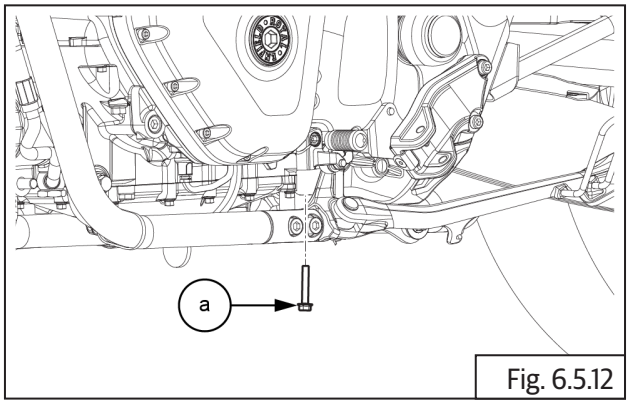

Fig. 6.5.12

	8 mm Socket with Ratchet/ Combination Spanner

- Slide and remove the gear change clamp **(a)** from gear shift shaft **(b)**.

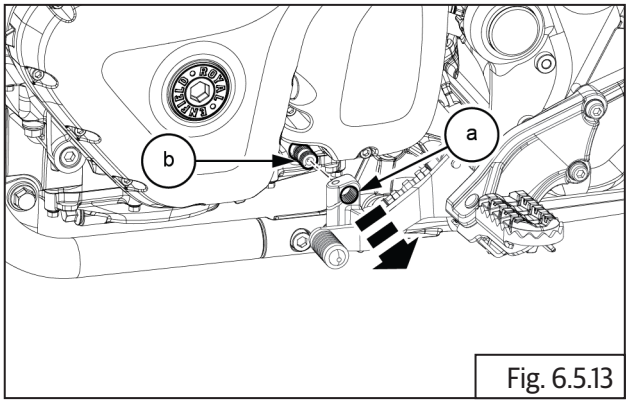

Fig. 6.5.13

- Loosen and remove 2 Nos cap bolts **(M8) (a)** from control plate .

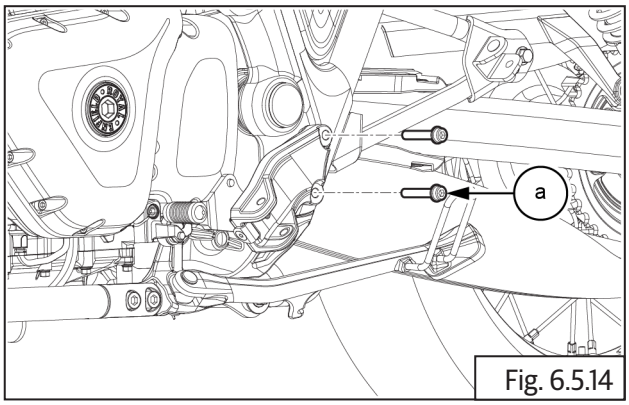

Fig. 6.5.14

	6 mm Allen Socket with Ratchet

- Remove control plate with gear shifter assembly **(a)** from frame.

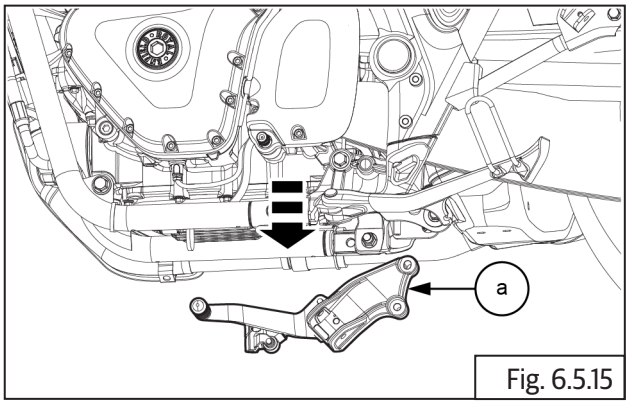

Fig. 6.5.15

- Remove pivot pin **(a)** from gear shift pedal **(C)**.
- Remove gear shift pedal **(c)** along with bush **(b)** from LH control plate **(d)**.

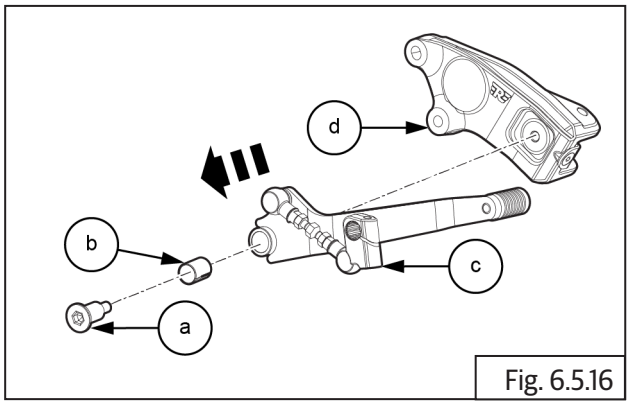

Fig. 6.5.16

	8 mm Allen Socket with Ratchet

- Loosen and remove the countersunk screw **(M6) (a)** from control plate .
- Remove the stopper plate **(b)** from control plate**.**

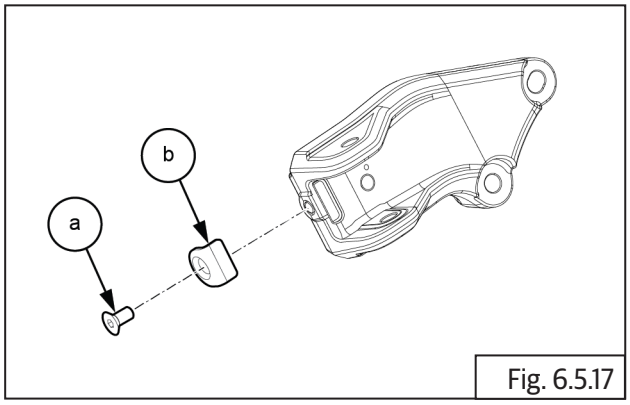

Fig. 6.5.17

	4 mm Allen Socket with Ratchet

6.5.4. Pillion Footrest

- Remove circlip **(a)** from the bottom of the RH pillion footrest.

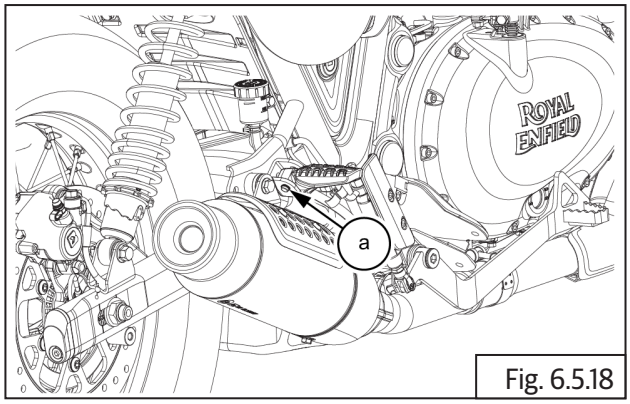

Fig. 6.5.18

	Circlip Expander

- Gently pull out pin **(a)** from the top supporting the RH pillion footrest.

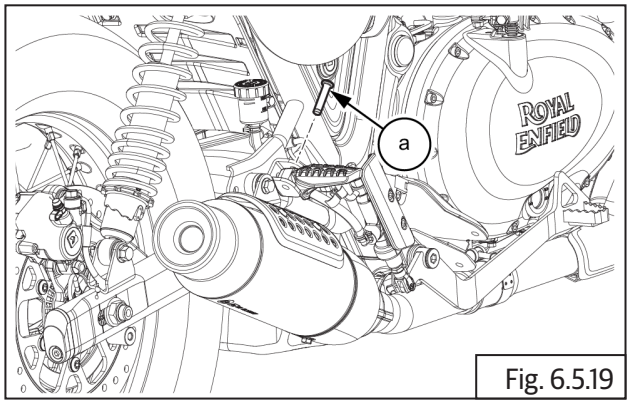

Fig. 6.5.19

	Nose plier

⚠ CAUTION
Ball and spring are loaded. Support footrest while removing/reassembly.

- Remove LH footrest **(a)** from mounting bracket.
- Carefully remove ball **(b)** with spring **(c)** and retainer plate **(d)**.

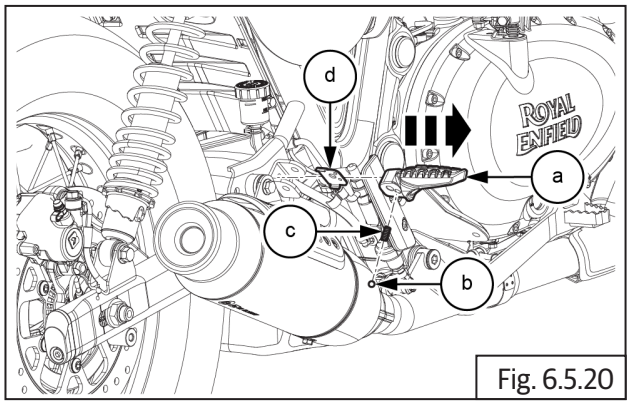

Fig. 6.5.20

- Repeat the same pillion footrest removal procedure to LHS pillion footrest **(a)**.

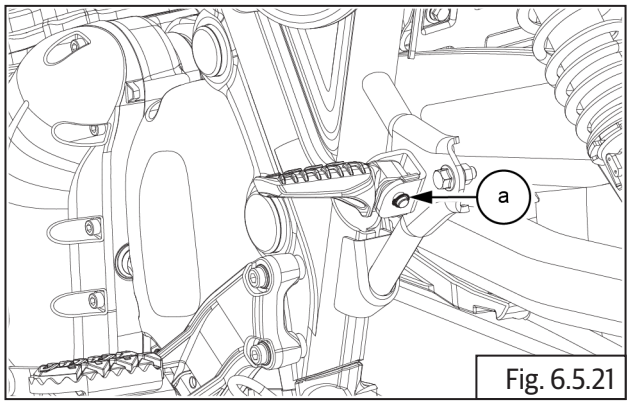

Fig. 6.5.21

6.5.5. Saree Guard (For Indian Market Only)

- Loosen and remove 2Nos Hex head flange bolts **(M8) (a)** from lift handle .

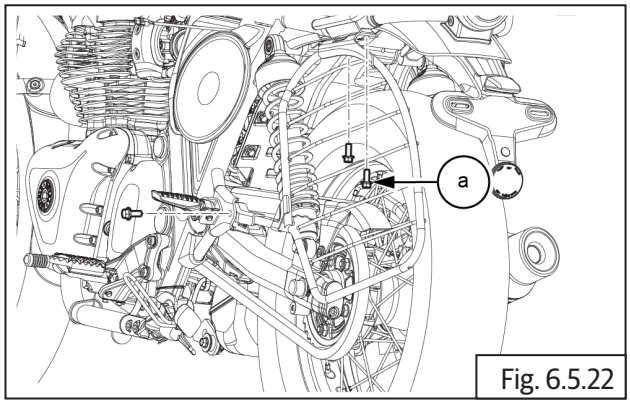

Fig. 6.5.22

	12 mm Socket with Ratchet

- Loosen and remove Hex head flange bolt **(M8) (a)** with flange nut **(M8) (b)** from LH saree guard.

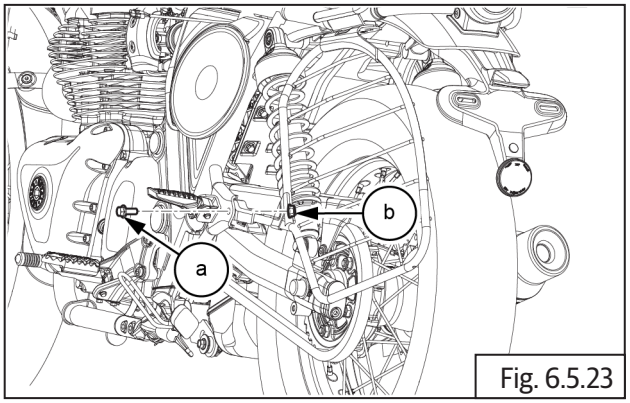

Fig. 6.5.23

	12 mm Socket with Ratchet

- Gently separate the saree guard **(a)**.

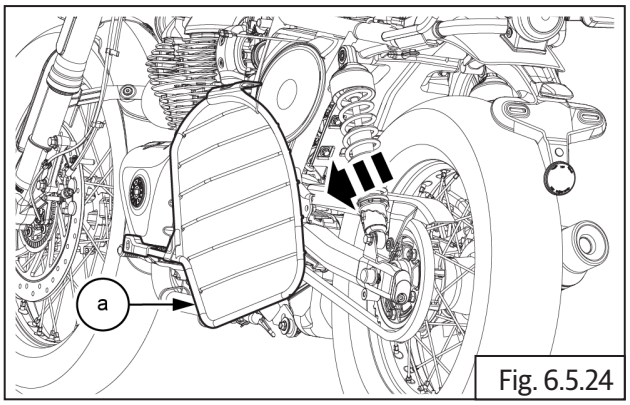

Fig. 6.5.24

6.5.6. Lift Handle

- Loosen and remove 2Nos Hex head flange bolts **(M8) (a)** from lift handle .

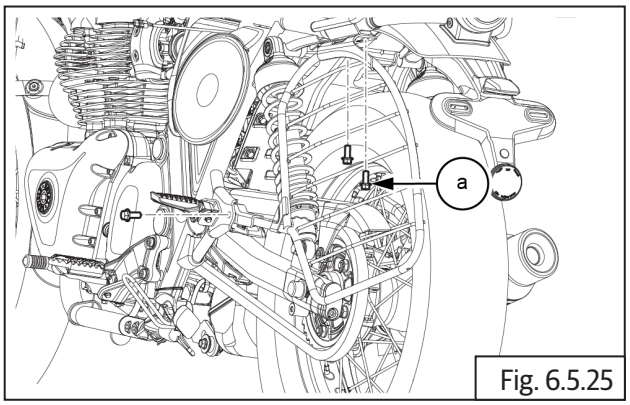

Fig. 6.5.25

	12 mm Socket with Ratchet

- Loosen and remove button head bolt **(M8) (a)** from lift handle **(b)**.
- Gently separate the lift handle **(b).**

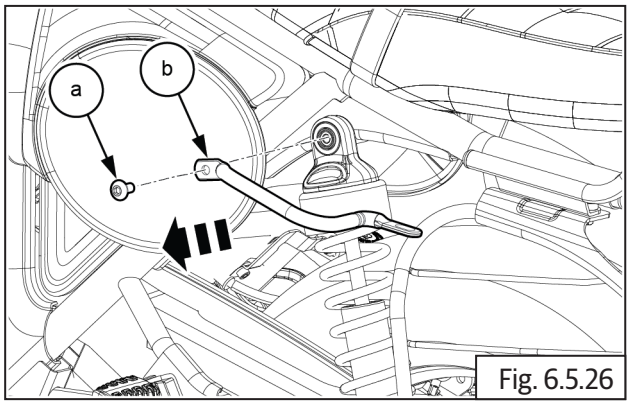

Fig. 6.5.26

	6 mm Allen Socket with Ratchet

6.5.7. Side Stand

⚠ CAUTION

Ensure the motorcycle is upright on a firm and flat surface.

- Locate a scissor jack under cradle frame and lift motorcycle such that the wheel is off the ground.

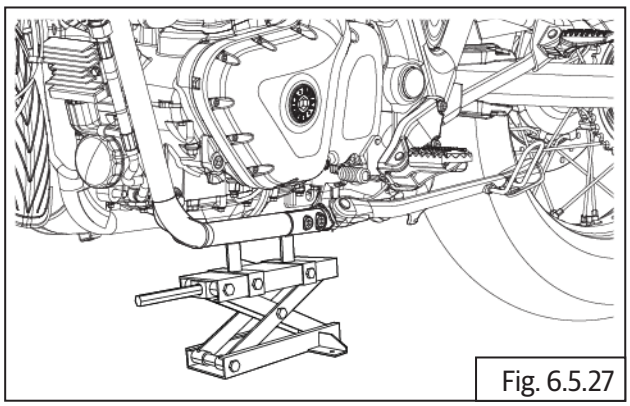
Fig. 6.5.27

⚠ CAUTION

Be extremely careful when removing and installing the springs as the combined tension of the springs is very strong.

- Remove spring **(a)** from side stand.

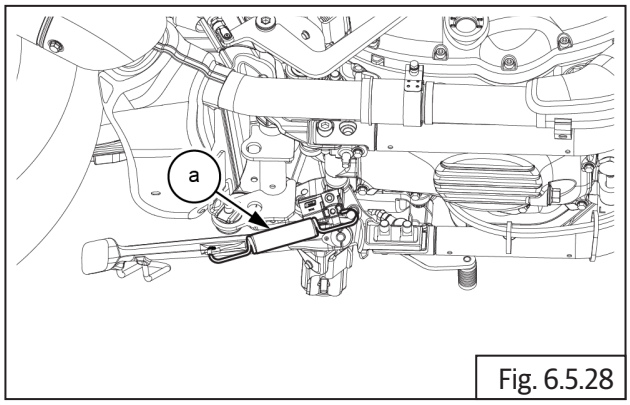

Fig. 6.5.28

	Phillips screw driver

- Remove split pin **(a)** from clevis pin.

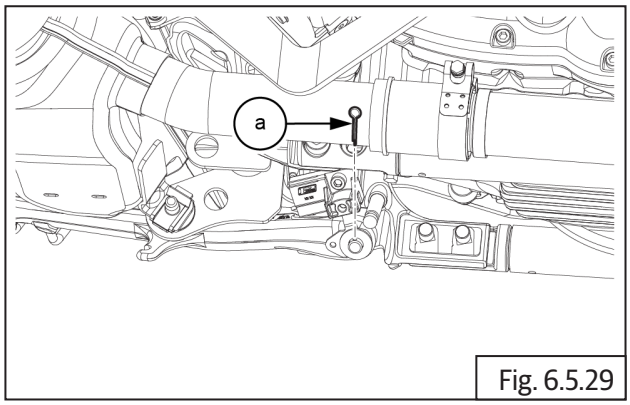

Fig. 6.5.29

	Nose plier

- Remove clevis pin **(a)** and washer **(b)** from side stand.

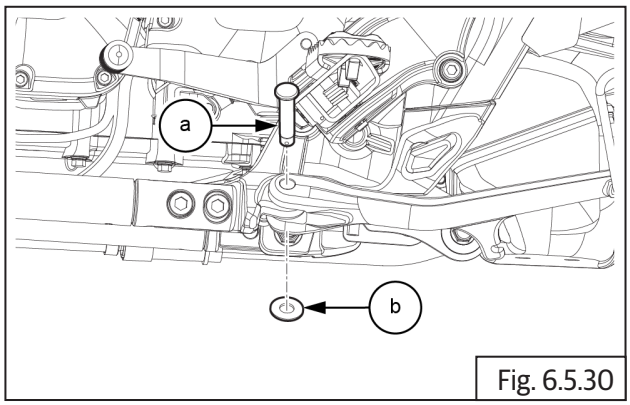

Fig. 6.5.30

	Nose plier

- Remove the side stand **(a)** from frame.

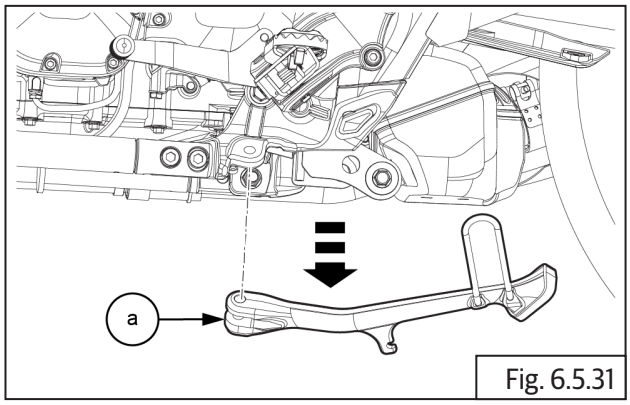

Fig. 6.5.31

- Disconnect the side stand switch coupler **(a)**.

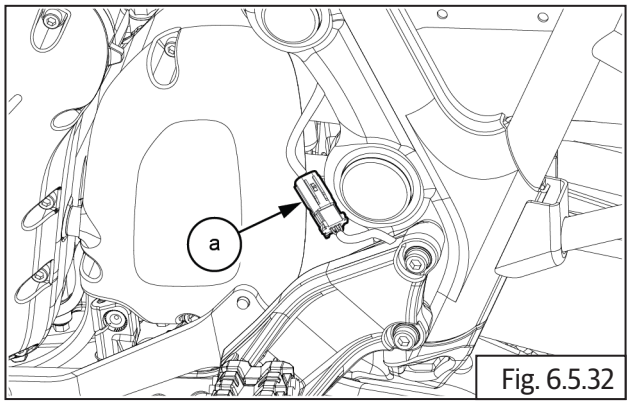

Fig. 6.5.32

- Detach the wire tag **(a)** from side stand switch wiring harness.

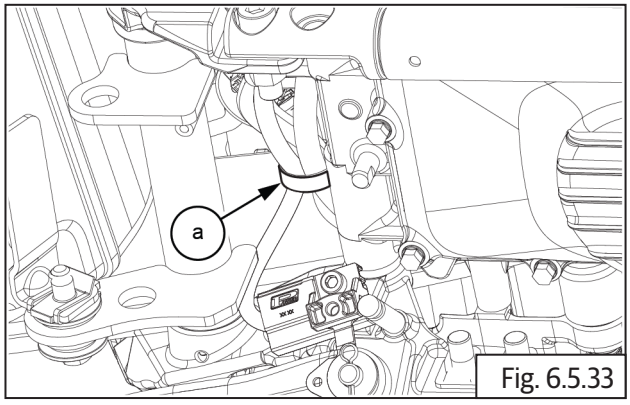

Fig. 6.5.33

	Nose plier

- Loosen and remove hex head cap crew **(M6) (a)** from side stand switch .

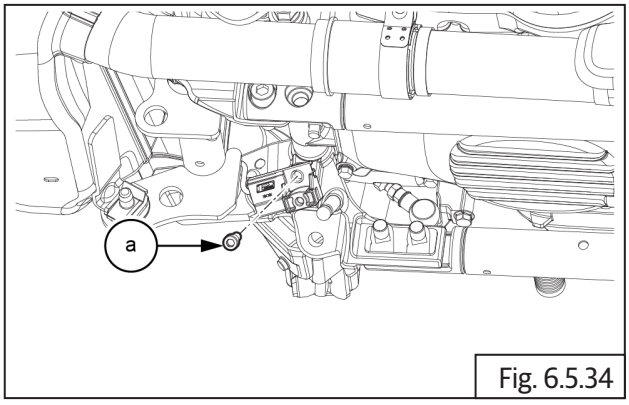

Fig. 6.5.34

	5 mm Allen Socket with Ratchet

- Remove the side stand switch with harness **(a)** from frame .

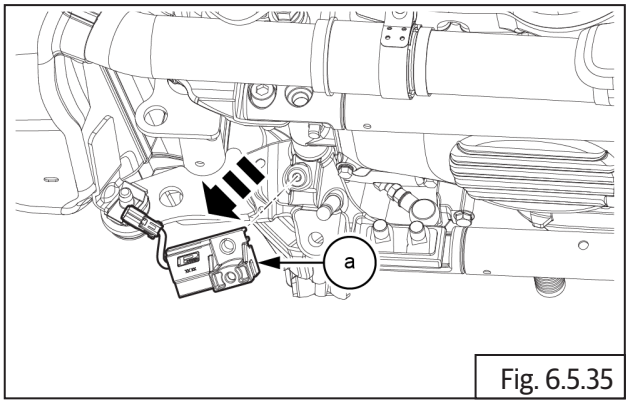

Fig. 6.5.35

6.5.8. Center Stand (optional)

NOTE
• *The Centre stand is not applicable for this model. It is only used for dealer floor activities. The stand fixture and center stand fall under a special tool (ST32304/A).*

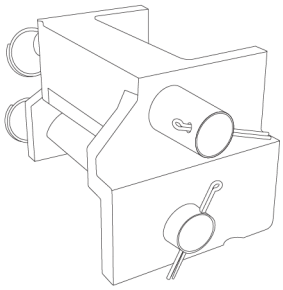

SPL	Part No: ST32304/A
	Part Name: Centre Stand Fixture

⚠ CAUTION
Ensure the motorcycle is upright on a firm and flat surface.

- Locate a scissor jack under cradle frame and lift motorcycle such that the wheel is off the ground.

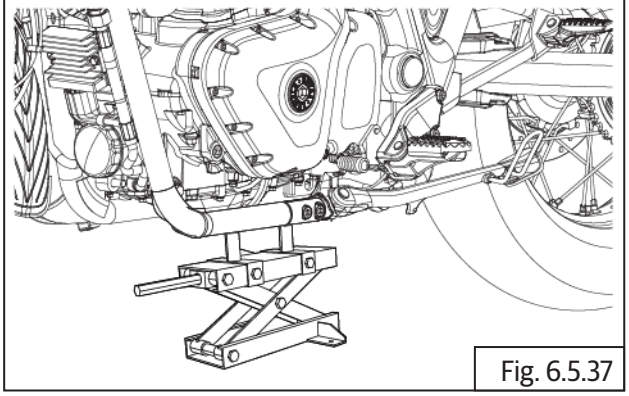

Fig. 6.5.37

- Remove the 2Nos split pins **(a)** from fixture pins.

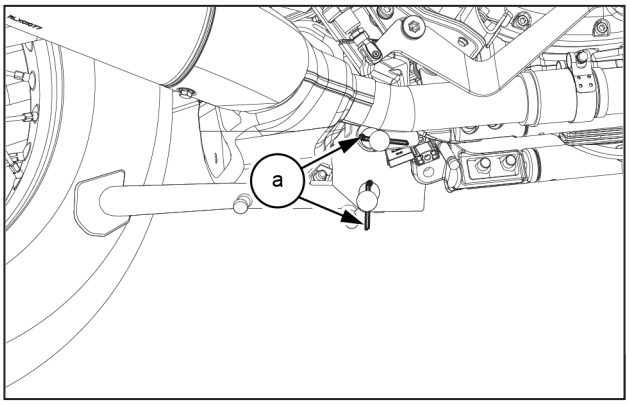

	Nose plier

- Remove the fixture pin **(a)** from center stand **(b).**
- Remove the center stand **(b)** from frame.

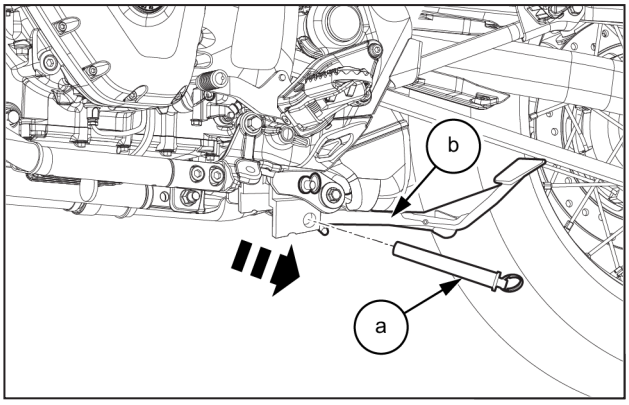

- Remove the fixture pin **(a)** and center stand fixture **(b).**

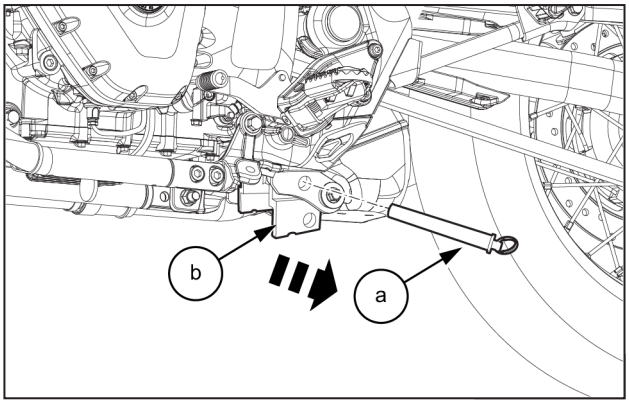

- Remove the fixture **(a)** from chassis frame.

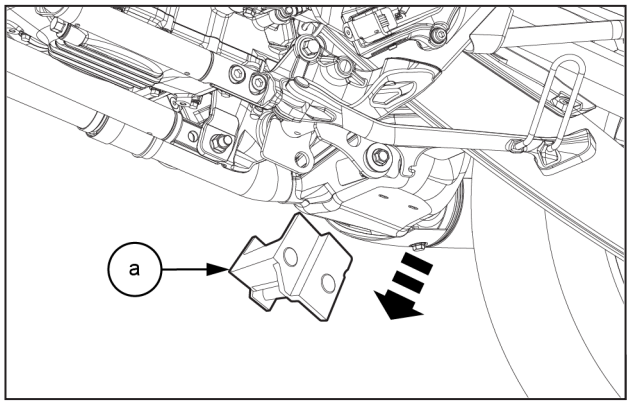

Inspection

- Inspect footrests for any wear out, cracks, damages at the mounting area.
- Inspect clevis pin for any wear-out.
- Inspect springs for loss of tension and breakage.
- Inspect ball (only for pillion footrest) for uneven wear.
- Inspect rider footrest housing on frame for any cracks and damages.
- Inspect pillion footrest brackets for any cracks and damages.
- Inspect the center stand (optional) for rust formation, any bend or damage.
- Inspect side stand for any wear out, cracks, damages at the mounting area.
- Inspect saree guard for rust, cracks bends or damages.
- Inspect rubber bush for any cracks, cut or tear and wear.

Assembly

6.5.9. Center Stand (optional)

NOTE
• *The Centre stand is not applicable for this model. It is only used for dealer floor activities. The stand fixture and center stand fall under a special tool (ST32304/A).*

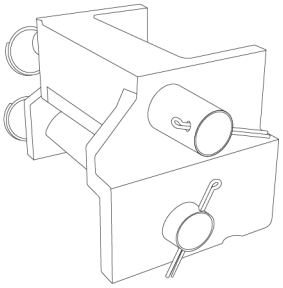

SPL	Part No: ST32304/A
	Part Name: Centre Stand Fixture

NOTE
• *Clean the clevis pin and ensure they are free of any dirt, grime,rust, etc and then lubricate the clevis pin.*

⚠ CAUTION
Ensure the motorcycle is upright on a firm and flat surface. **Ensure motorcycle is supported appropriately.**

- Attach the fixture **(a)** to the chassis frame.

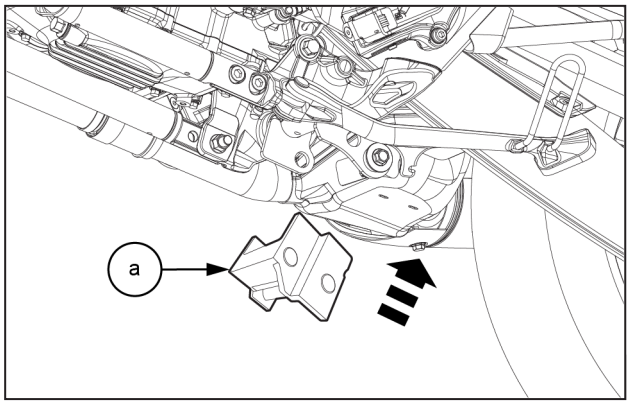

- Install the fixture pin **(a)** into the center stand fixture **(b)**.

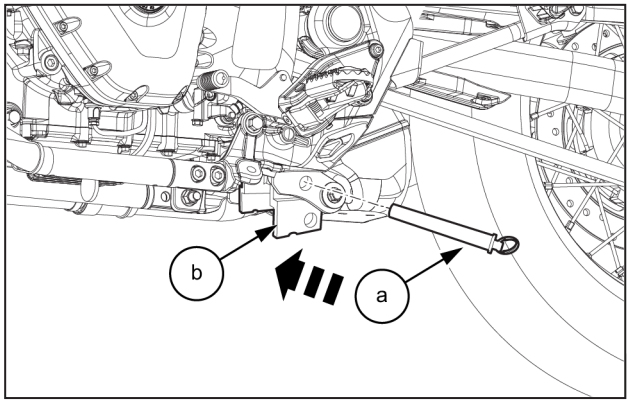

- Attach the center stand **(b)** to the frame.
- Insert the fixture pin **(a)** into the center stand **(b)**.

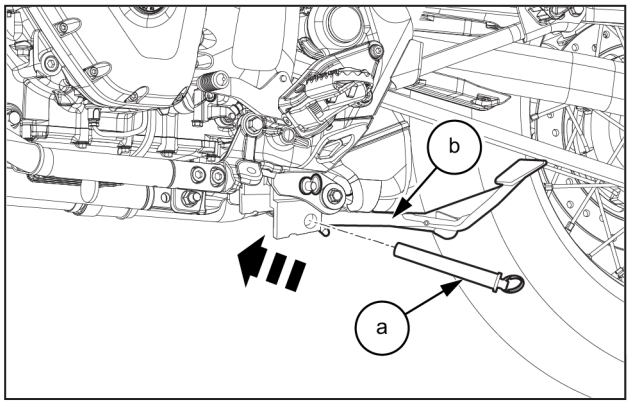

- Secure the 2Nos split pins **(a)** onto the fixture pins..

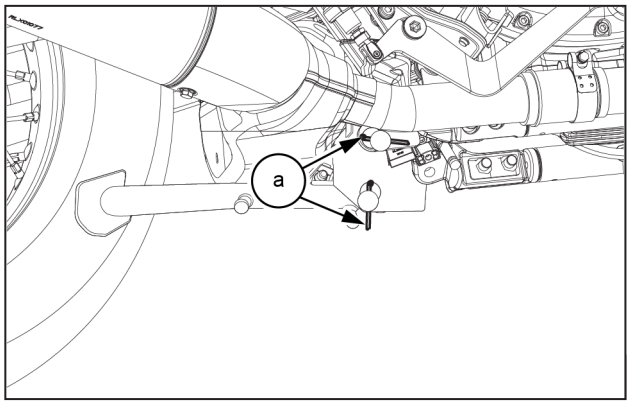

	Nose plier

6.5.10. Side Stand

- Install the side stand switch with harness **(a)** onto the frame.

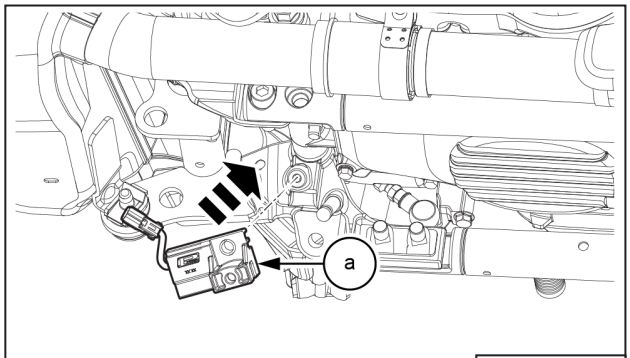

Fig. 6.5.47

- Tighten the hex head cap screw **(M6) (a)** to secure the side stand switch.

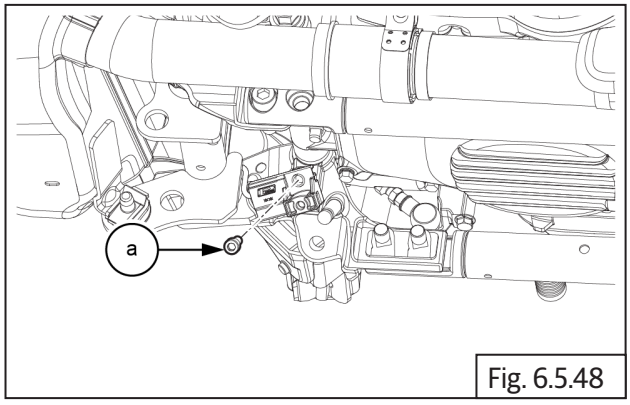

Fig. 6.5.48

	5 mm Socket with Ratchet
	4- 6 Nm / 0.4 - 0.6 kgf-m

- Attach the wire tag **(a)** to the side stand switch wiring harness.

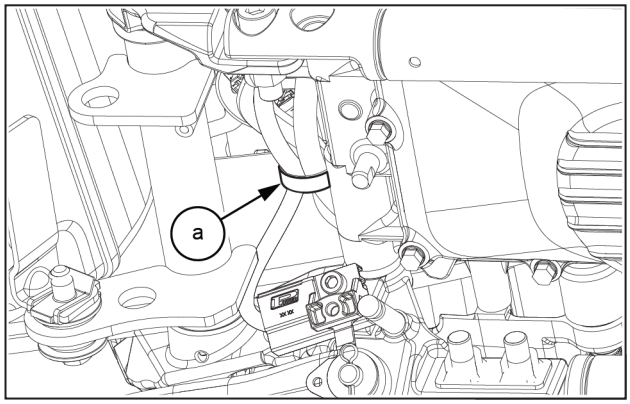

- Connect the side stand switch coupler **(a)**.

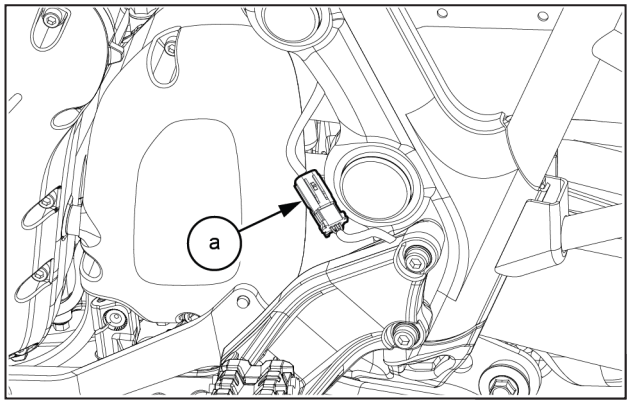

- Apply 2g of grease evenly on both sides of the slot on the side stand **(a)**.
- Install the side stand **(a)** onto the frame.

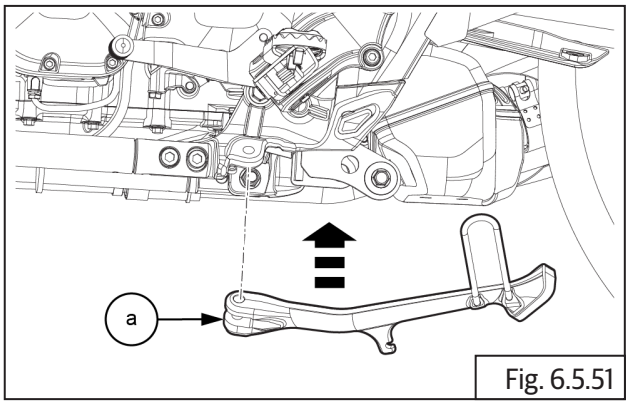

Fig. 6.5.51

	NLGI 2 / Mobil XHP 222

- Apply 1g of grease on the clevis pin **(a)**.
- Insert the clevis pin **(a)** and washer **(b)** into the side stand.

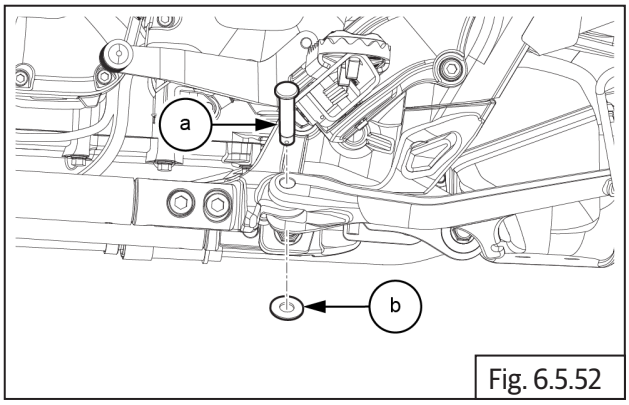

Fig. 6.5.52

	NLGI 2 / Mobil XHP 222

	Nose plier

- Secure the clevis pin with the split pin **(a)**.

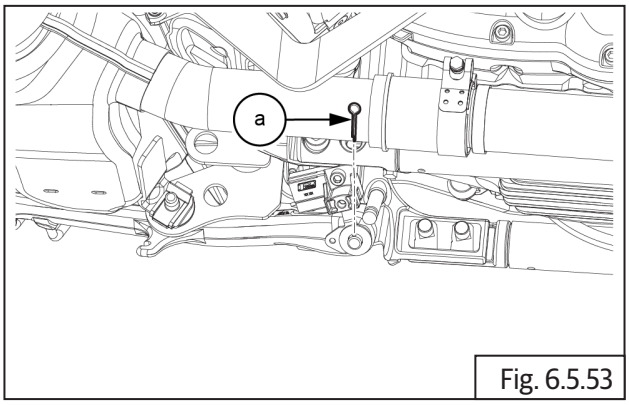

Fig. 6.5.53

	Nose plier

⚠ CAUTION

Be extremely careful when removing and installing the springs as the combined tension of the springs is very strong.

- Install the spring **(a)** onto the side stand.

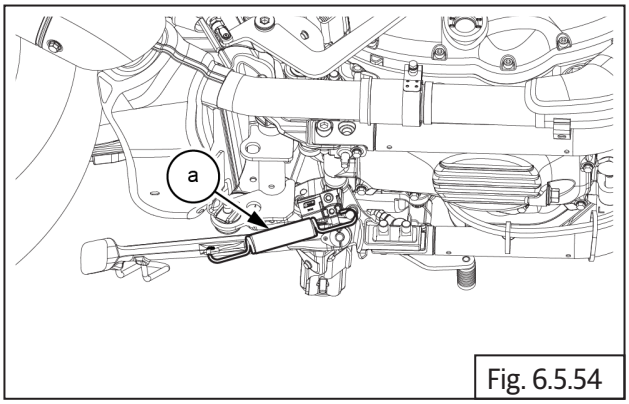

Fig. 6.5.54

	Phillips screwdriver

6.5.11. Lift Handle

- Align the lift handle **(b)** with the mounting holes.
- Insert and tighten the button head bolt **(M8) (a)** into the lift handle.

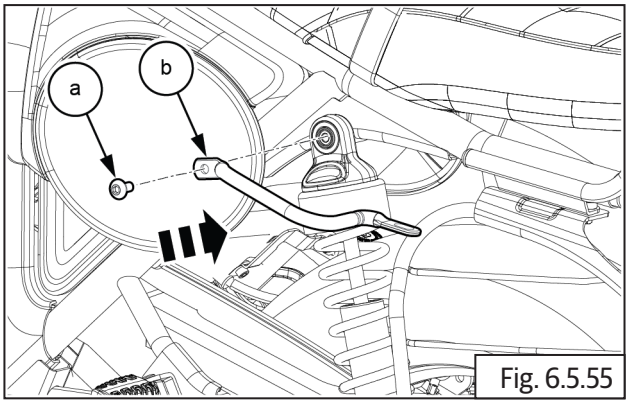

Fig. 6.5.55

	6 mm Allen Socket with Ratchet
	14- 22 N-m / 1.4 - 2.2 kgf-m

- Insert and tighten the 2Nos Hex head flange bolts **(M8) (a)** into the lift handle.
- Ensure all bolts are securely tightened to complete the assembly.

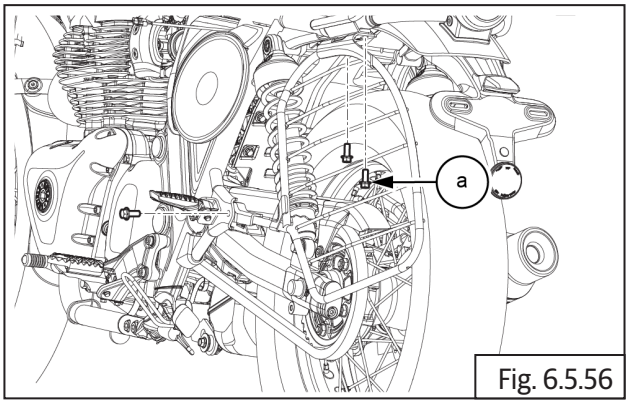

Fig. 6.5.56

	12 mm Socket with Ratchet
	34 N-m / 3.4 kgf-m

6.5.12. Saree Guard (For Indian Market Only)

- Assemble the LH saree guard **(a)** by aligning it with the mounting holes.

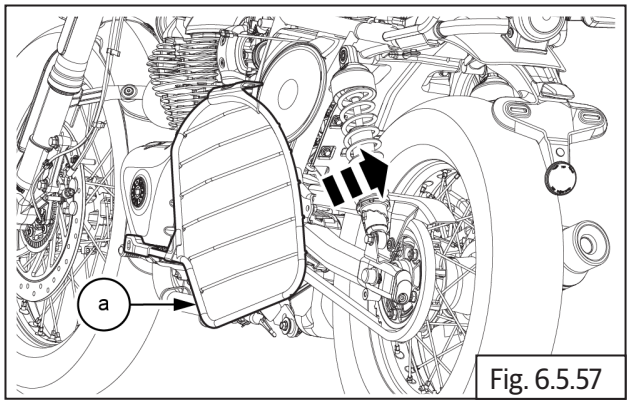

Fig. 6.5.57

- Insert and tighten the Hex head flange bolt **(M8) (a)** with flange nut **(M8) (b)** to secure the LH saree guard.

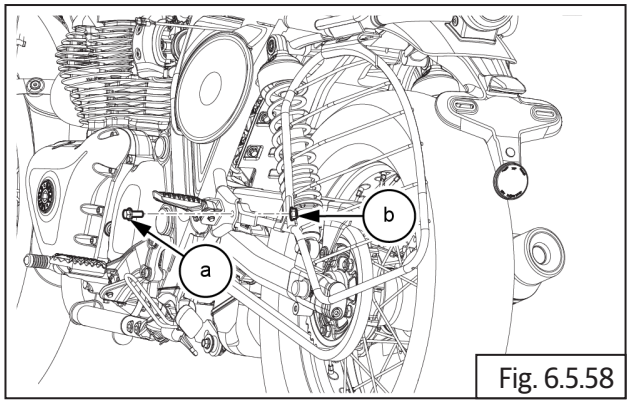

Fig. 6.5.58

	12 mm Socket with Ratchet
	34 N-m / 3.4 kgf-m

- Secure the lift handle by inserting and tightening 2Nos Hex head flange bolts **(M8) (a)**.

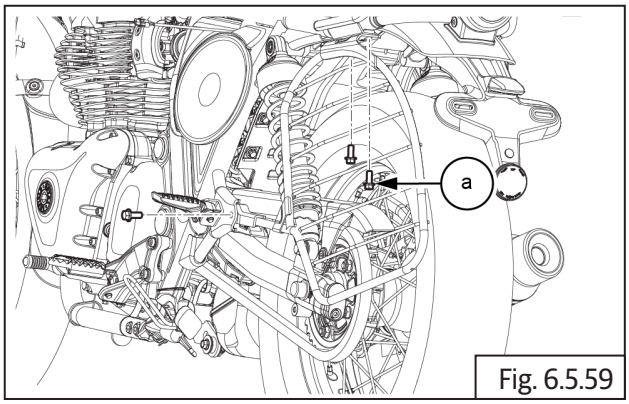

Fig. 6.5.59

	12 mm Socket with Ratchet
	34 N-m / 3.4 kgf-m

6.5.13. Pillion Footrest

- Install retainer plate **(d)** into mounting bracket.
- Install spring **(c)** into the footrest **(a)**.
- Apply grease on the ball **(b)** slightly and locate it on the hole in the footrest **(a)**.
- Locate the footrest **(a)** carefully on the mounting bracket without disturbing the ball **(b)**.

⚠ CAUTION

Ball and spring are loaded. Support footrest while removing/reassembly.

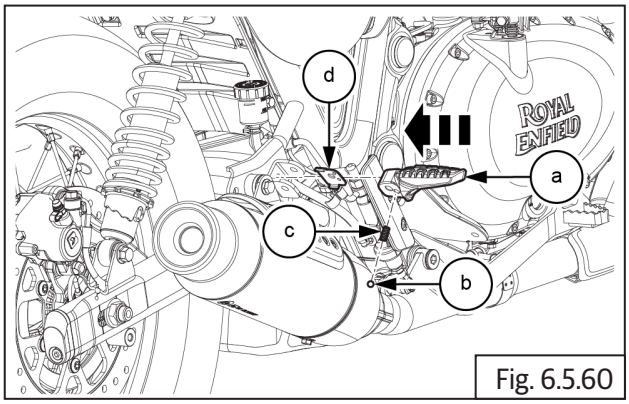

Fig. 6.5.60

	NLGI 2 / Mobil XHP 222

- Apply grease on pin before install.
- Gently install the pin **(a)** on top supporting the RH footrest.

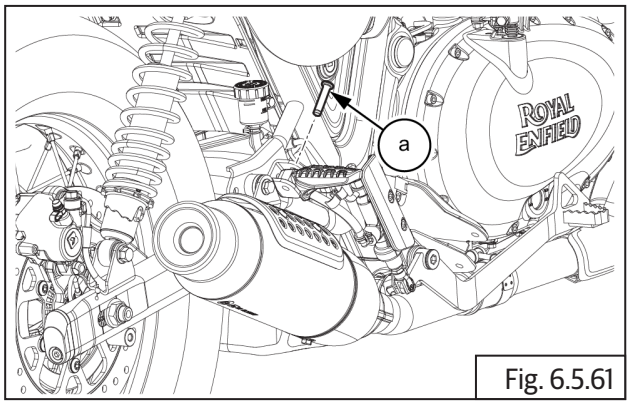

Fig. 6.5.61

	NLGI 2 / Mobil XHP 222

- Locate and fix circlip **(a)** on bottom of the LH footrest..

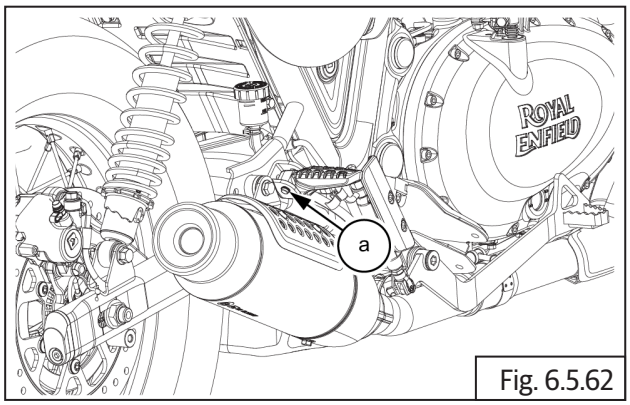

Fig. 6.5.62

	Circlip Expander

- Repeat the same pillion footrest install procedure to LHS footrest **(a)**.

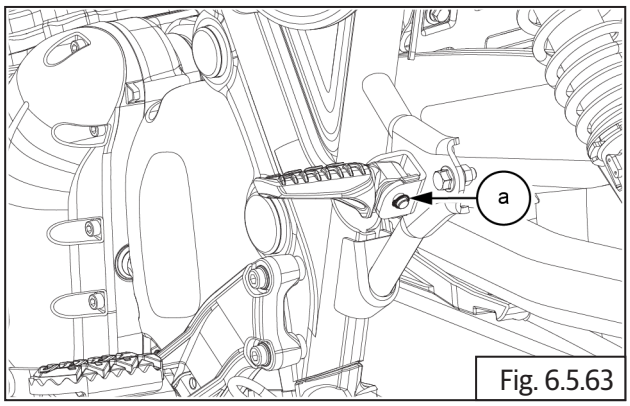

Fig. 6.5.63

6.5.14. Control Plate (LHS)

- Attach the stopper plate **(b)** to the control plate
- Tighten the countersunk screw **(M6) (a)**.

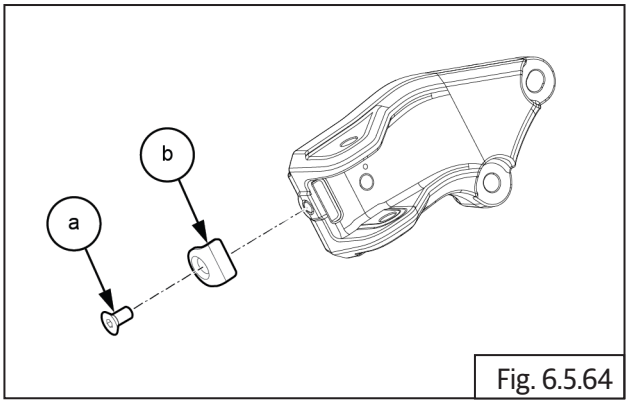

Fig. 6.5.64

	4 mm Allen Socket with Ratchet
	7- 9 N-m / 0.7 - 0.9 kgf-m

- Apply grease on bush **(b)** and pivot pin **(a)** .
- Install the gear shift pedal **(c)** along with the bush **(b)** onto the LH control plate **(d)** and secure it in place.
- Tighten the pivot pin **(a)** into the gear shift pedal.

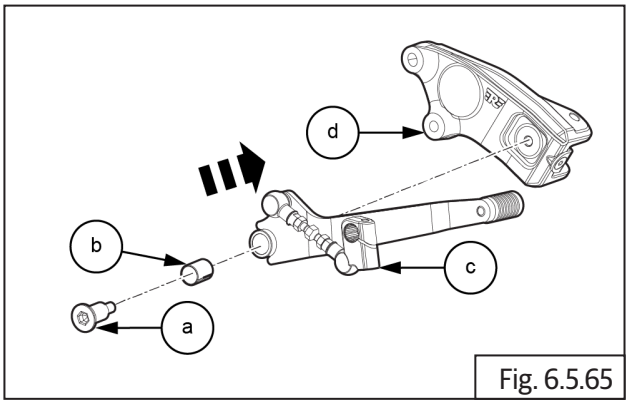

Fig. 6.5.65

	NLGI 2 / Mobil XHP 222

	8 mm Allen Socket with Ratchet
	21.75 - 28.75Nm / 2.21 - 2.93kgf-m

- Place the control plate with gear shifter assembly **(a)** onto the frame.

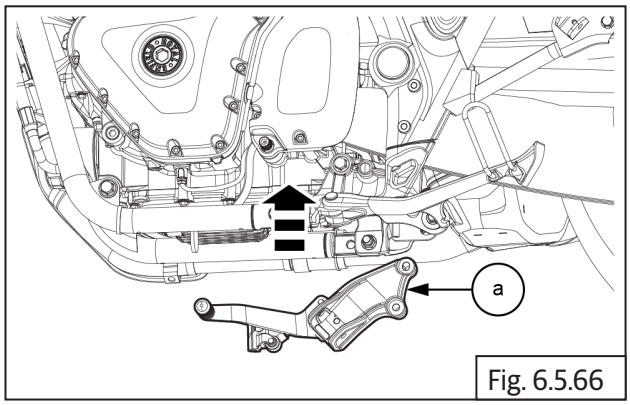

Fig. 6.5.66

- Secure the control plate to the frame by tightening the 2 Nos cap bolts **(M8) (a)**.

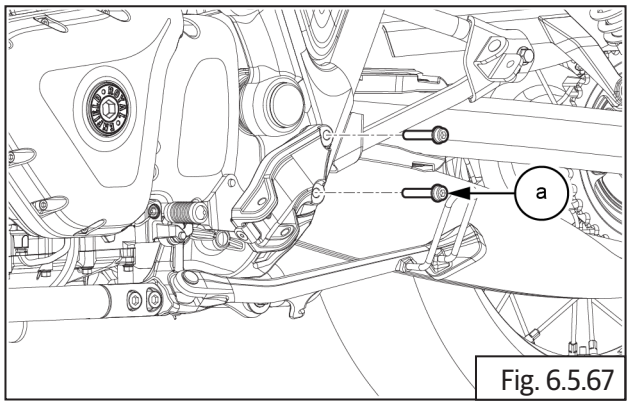

Fig. 6.5.67

	6 mm Allen Socket with Ratchet
Torque	23 - 27Nm / 2.3 - 2.7kgf-m

- Slide the gear change clamp **(a)** onto the gear shift shaft **(b)**.

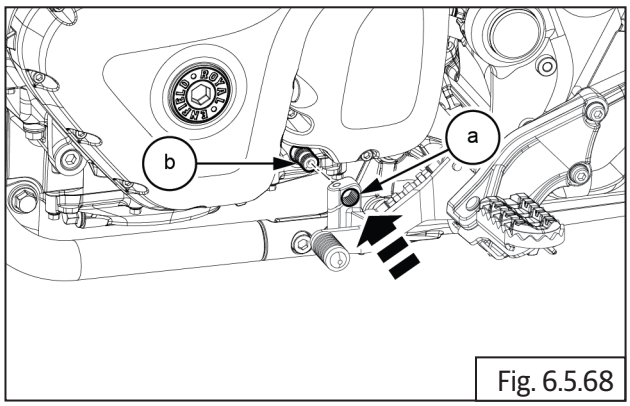

Fig. 6.5.68

- Make sure the punch mark in engine shaft must be inline with gear actuator shaft. refer below image.

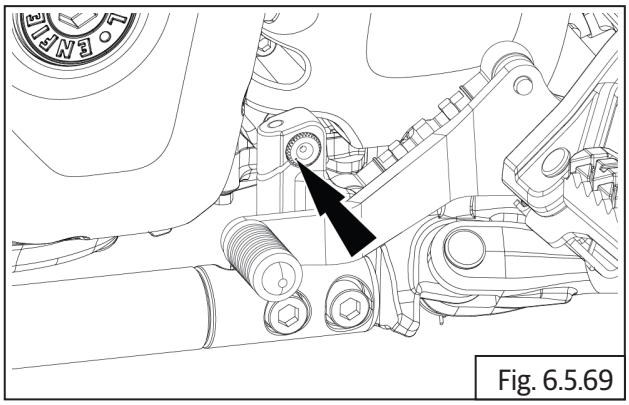
Fig. 6.5.69

- Secure the gear change clamp by tightening the Hex head flange bolt **(M6) (a)**.

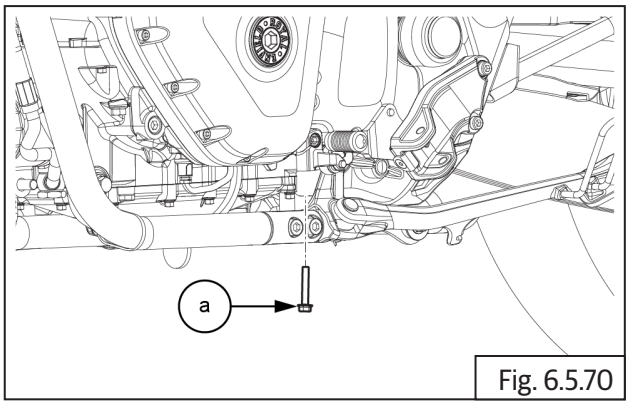

Fig. 6.5.70

	8 mm Socket with Ratchet/ Combination Spanner
Torque	9 - 12Nm / 0.9 - 1.2kgf-m

6.5.15. Control Plate (RHS)

- Attach the stopper plate **(b)** to the control plate
- Tighten the countersunk screw **(M6) (a)**.

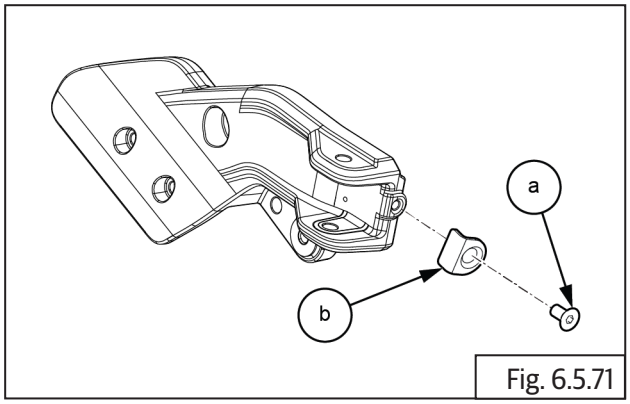

Fig. 6.5.71

	4 mm Allen Socket with Ratchet
	7- 9 N-m / 0.7 - 0.9 kgf-m

- Apply grease on bush **(c)** and pivot pin **(b)**.
- Locate brake pedal **(a)** along with bush **(c)** and spring **(d)** into RH control plate.
- Tighten pivot pin **(b)** into control plate RHS.

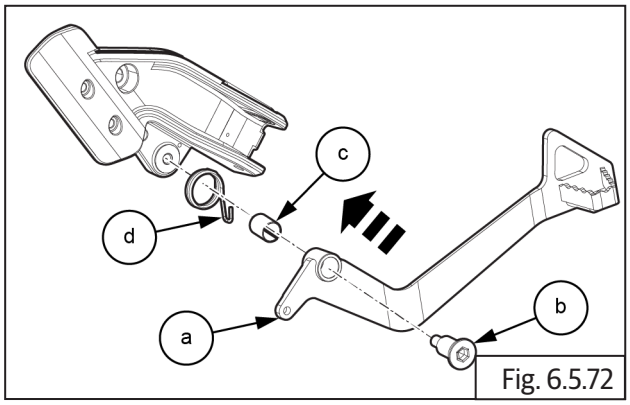

Fig. 6.5.72

	NLGI 2 / Mobil XHP 222

	8 mm Allen Socket with Ratchet
	21.75 - 28.75Nm / 2.21 - 2.93kgf-m

- Install the control plate with brake pedal **(a)** onto the frame.

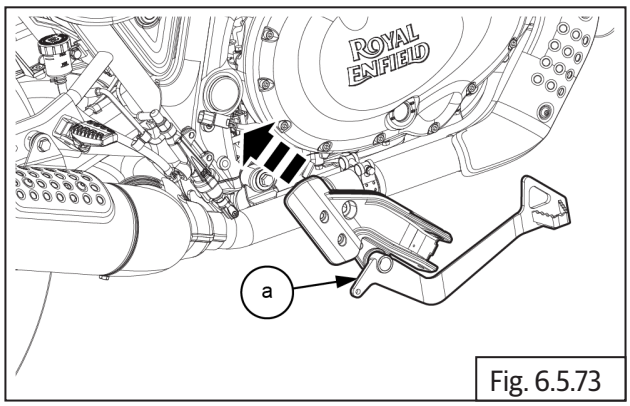

Fig. 6.5.73

- Tighten and secure 2 Nos cap bolts **(M8) (a)** onto the control plate.

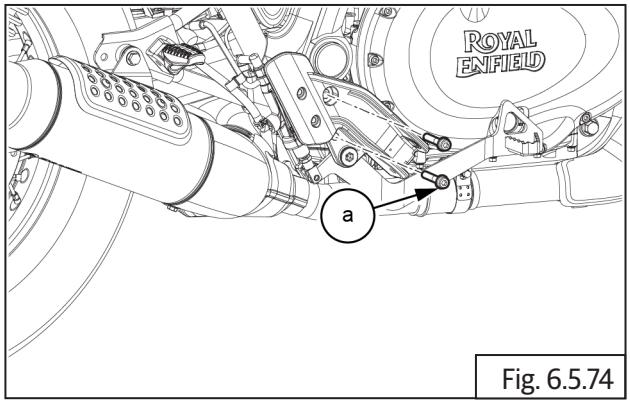

Fig. 6.5.74

	6 mm Allen Socket with Ratchet
Torque	18 - 22Nm / 1.8 - 2.2 kgf-m

- Tighten and secure 2 Nos cap bolts **(M6) (a)** onto the master cylinder.

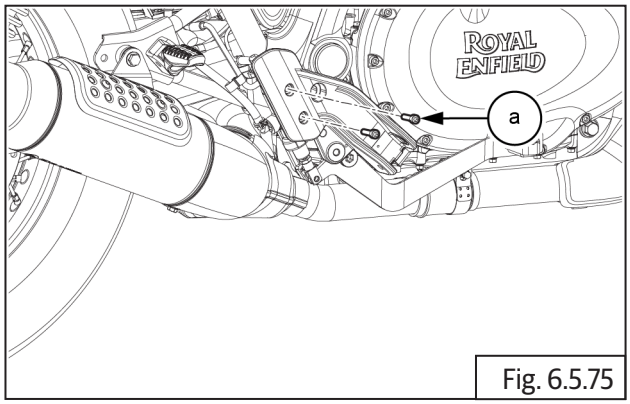

Fig. 6.5.75

	5 mm Allen Socket with Ratchet
Torque	9 - 12Nm / 0.9 - 1.2kgf-m

- Insert clevis spring pin **(a)** into the rear master cylinder.

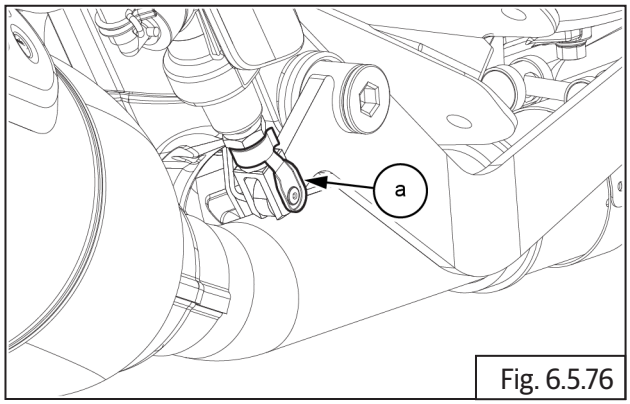

Fig. 6.5.76

	Nose plier

6.5.16.Rider Footrest

- Fix the rubber **(b)** to the footrest **(a)**.

NOTE
• *If rubber is difficult to press with footrest, apply grease* (NLGI 2 / Mobil XHP 222) *and pull the rubber pip using noseplier.*

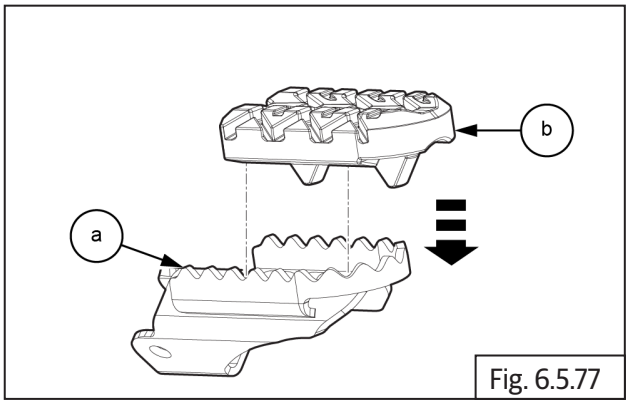

Fig. 6.5.77

⚠ CAUTION
Spring is loaded. Support footrest while removing/reassembly

- Insert the footrest **(a)** and spring **(b)** into the control plate.

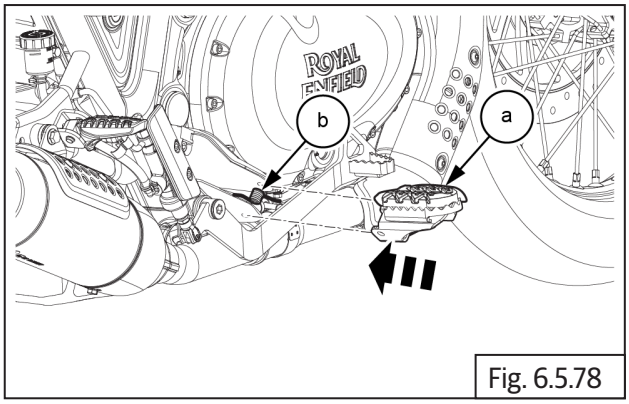

Fig. 6.5.78

- Secure the clevis pin **(a)** back into the footrest housing top.

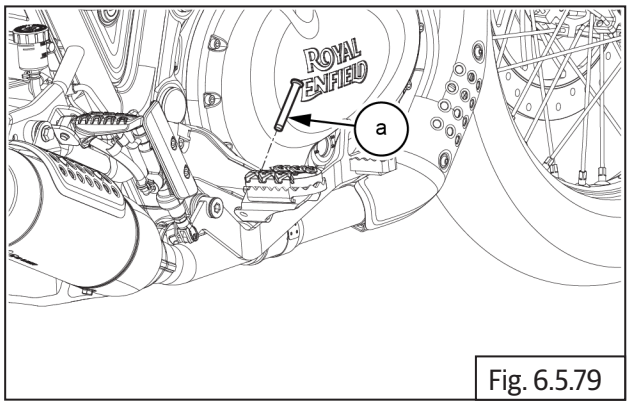

Fig. 6.5.79

	Nose plier

- Install the circlip **(a)** at the bottom of the RHS footrest.

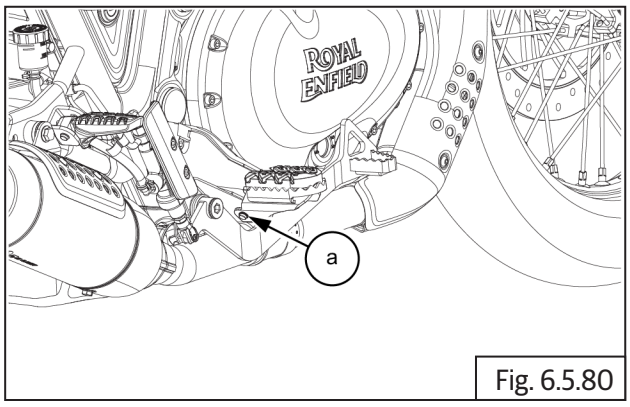

Fig. 6.5.80

	Circlip Expander

- Repeat the same rider footrest assembly procedure to LHS footrest **(a)**.

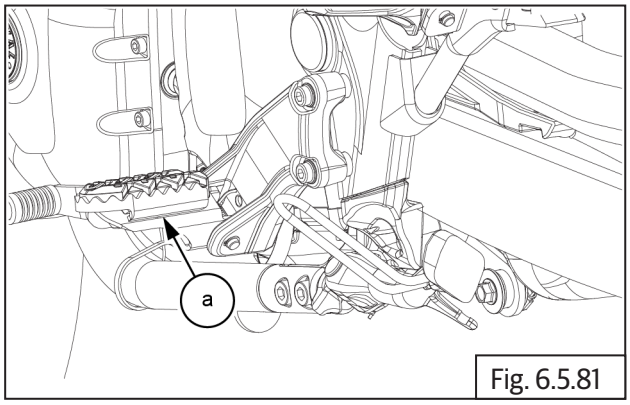

Fig. 6.5.81

MUDGUARDS/NUMBER PLATES/GRAB HANDLE

CONTENTS **PAGE**

6.6 Mudguards/Number Plates/Grab Handle 412

Dismantling 412

6.6.1. Front Number Plate 412

6.6.2. Rear Number Plate (Europe) 412

6.6.3. Rear Number Plate (USA) 413

6.6.4. Front Mudguard 414

6.6.5. Reflector Rear 415

6.6.6. Rear Mudguard 416

6.6.7. Rear Mudguard Infill Cover 419

6.6.8. Grab Handle 420

Inspection 420

Assembly 420

6.6.9. Grab Handle 420

6.6.10. Rear Mudguard Infill Cover 421

6.6.11. Rear Mudguard 422

6.6.12. Reflector Rear 425

6.6.13. Front Mudguard 426

6.6.14. Rear Number Plate (USA) 427

6.6.15. Rear Number Plate (Europe) 428

6.6.16. Front Number Plate 429

6.6 Mudguards/Number Plates/Grab Handle

Dismantling

6.6.1. Front Number Plate

- As per Government norms high security number plates will be provided which are riveted with the vehicle and cannot be removed.
- Loosen and remove 2 Nos Hex flange bolts **(M6) (a)** from number plate bracket.

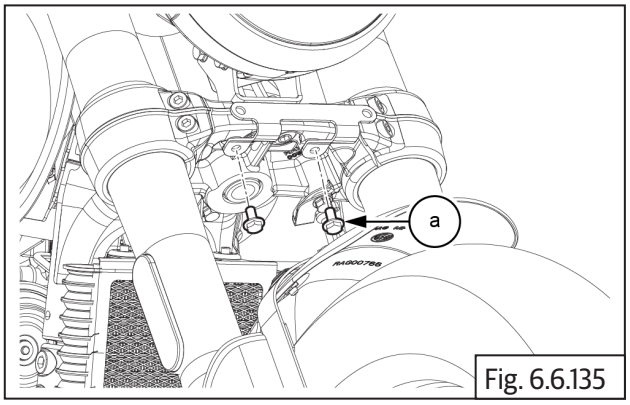

Fig. 6.6.135

	10 mm Socket with Ratchet.

- Remove number plate bracket from bottom yoke **(a)**.

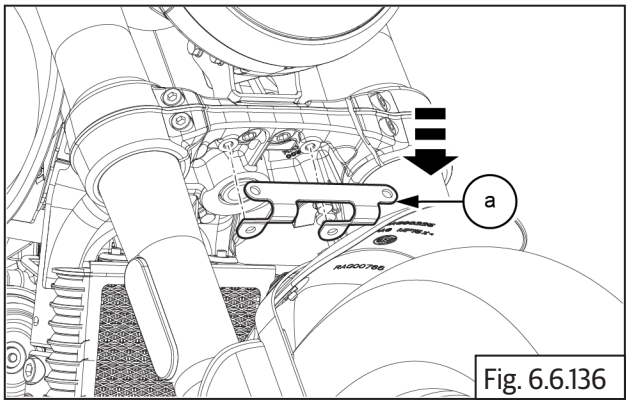

Fig. 6.6.136

6.6.2. Rear Number Plate (Europe)

- Loosen and remove 3 Nos Button bolts **(M6) (a)** and 2 Nos washers **(c)** and 3 Nos nuts **(b)** from rear number plate.
- Remove rear number plate **(d)** from mudflap.

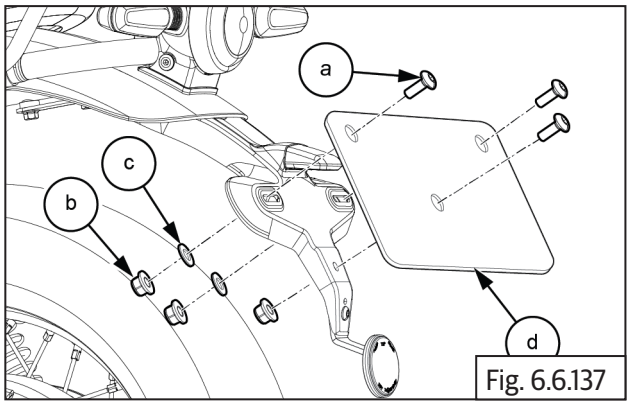

Fig. 6.6.137

	10 mm Socket with Ratchet 5 mm Allen Socket with Ratchet

- Loosen and remove hex socket bolts **(M5) (a)** and nuts **(b)** from reflector bracket.
- Remove reflector bracket **(d)** from mudflap.
- Loosen and remove Hex nut **(b)** from rear reflector.
- Remove the rear reflector **(c)** from rear mudflap.

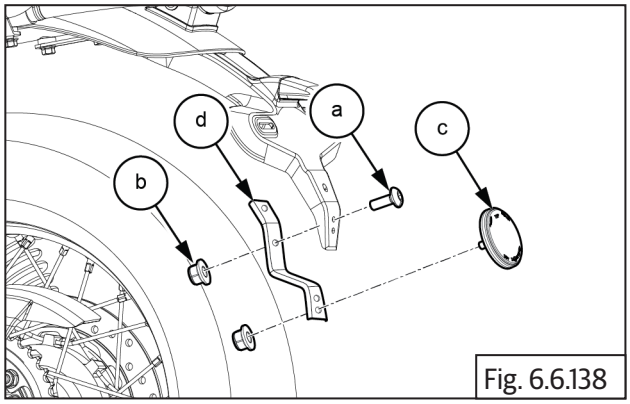

Fig. 6.6.138

	10 mm Socket with Ratchet 5 mm Allen Socket with Ratchet

6.6.3. Rear Number Plate (USA)

- Loosen and remove 2 Nos Button bolts **(M6) (a)** and 2 Nos washers **(c)** and 2Nos nuts **(b)** from rear number plate **(d)**.
- Remove rear number plate **(d)** from mudflap.
- Remove reflector bracket **(e)** from mudflap.

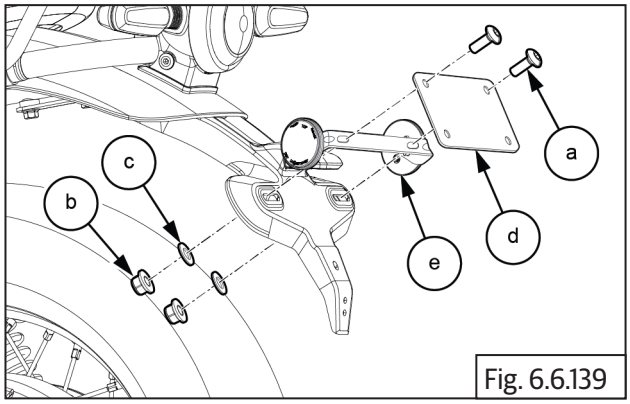

Fig. 6.6.139

	10 mm Socket with Ratchet 5 mm Allen Socket with Ratchet

- Loosen and remove 2Nos Hex nut **(M5) (a)** with washers **(b)** from rear reflector **(c)**.
- Remove the rear reflectors **(c)** from bracket.

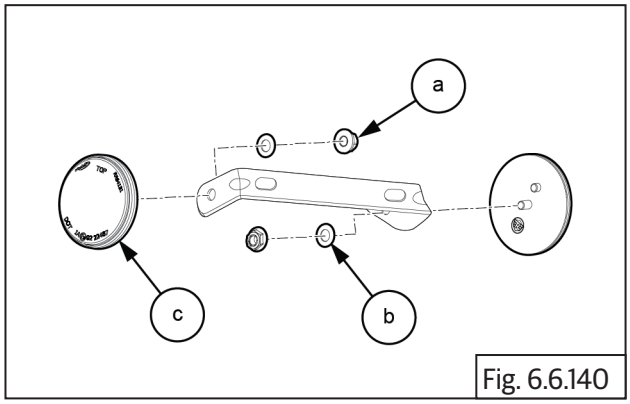

Fig. 6.6.140

	10 mm Socket with Ratchet

6.6.4. Front Mudguard

- Loosen and remove 2 Nos Button head bolts **(M8) (a)** from both side of front mudguard.

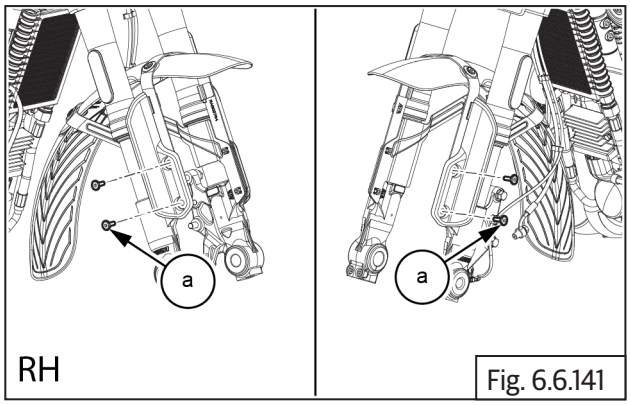

Fig. 6.6.141

	5 mm Allen socket with Ratchet

- Slightly lift fork guard **(a)** upward and detach from mudguard stay C flange.

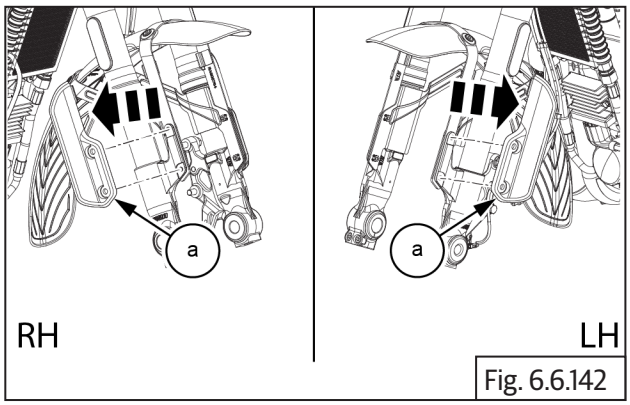

Fig. 6.6.142

- Slightly lift mudguard upwards, tilt it to one side and remove from fork ends.

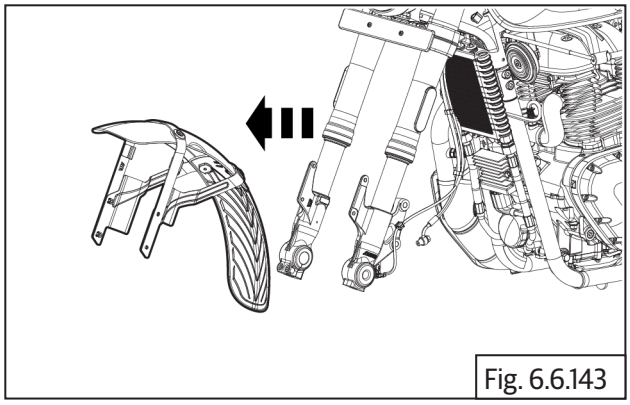

Fig. 6.6.143

- Loosen and remove 2 Nos button bolts **(M6) (a)** with top hats **(b)** from mudflap.

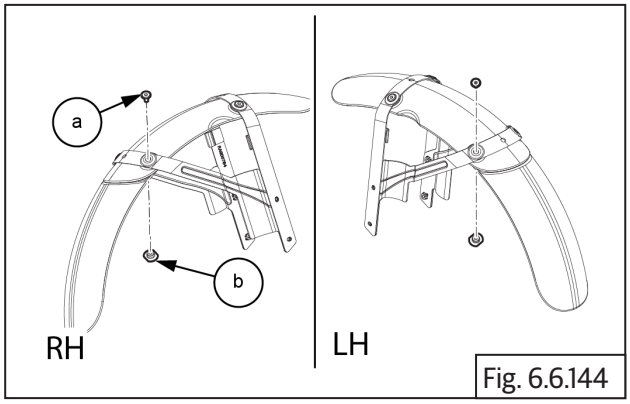

Fig. 6.6.144

	3 mm Allen socket with Ratchet

- Remove the mudflap **(a)**.

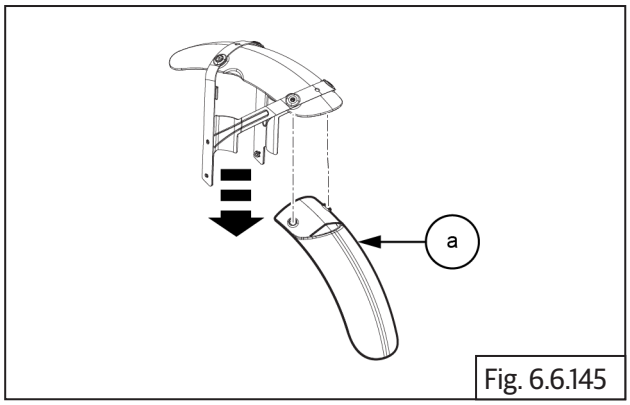

Fig. 6.6.145

- Loosen and remove 2 Nos button bolts **(M6) (a)** and **(b)** from front guard.

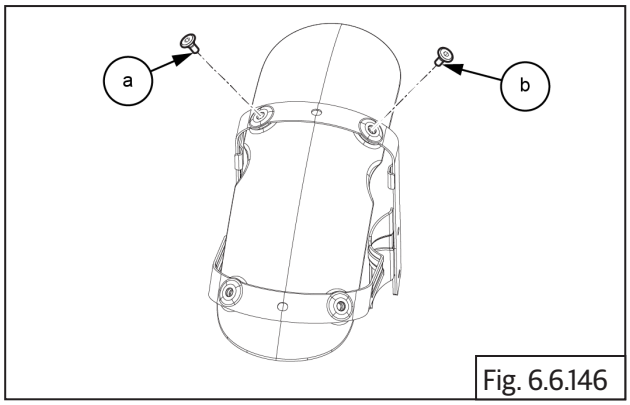

Fig. 6.6.146

	5 mm Allen socket with Ratchet

- Separate the stay **(a)** from front mudguard.

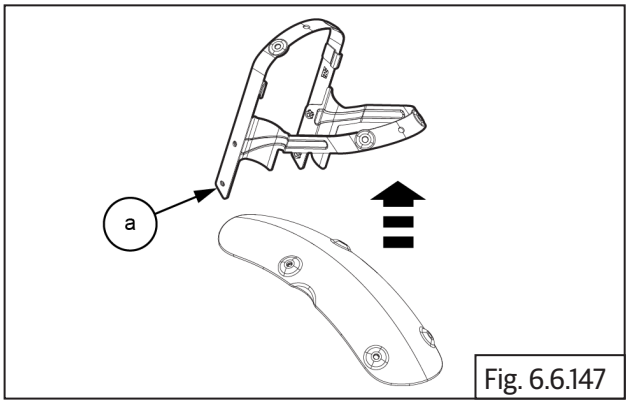

Fig. 6.6.147

- Separate the brace **(a)** from front mudguard.

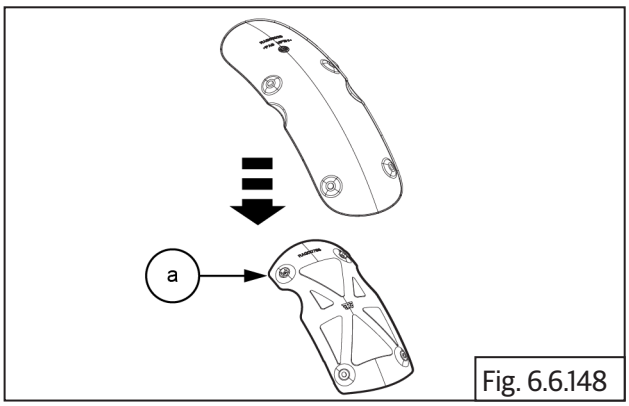

Fig. 6.6.148

6.6.5. Reflector Rear

- Loosen and remove Hex nut **(M5) (a)** along with washer from rear mudguard bottom.

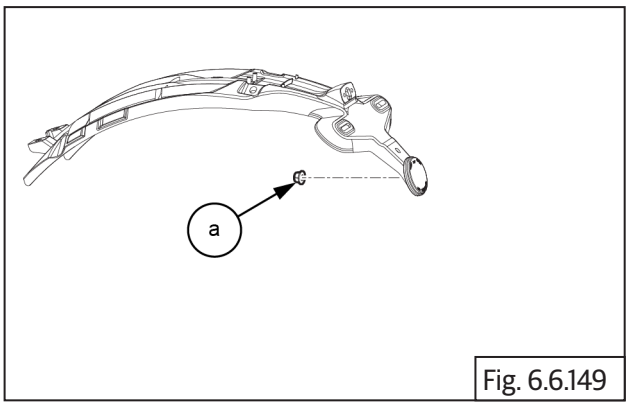

Fig. 6.6.149

	10 mm Socket with Ratchet

- Remove the rear reflector **(a)** from rear mudguard.

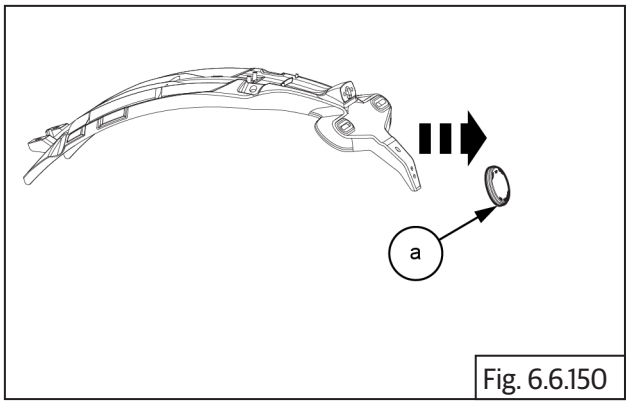

Fig. 6.6.150

6.6.6. Rear Mudguard

- Remove the following:
  - Side panel RH (Refer----------) .
  - Rider seat(Refer----------).
- Loosen and remove 3 Nos rivet **(a)** from cable cover .

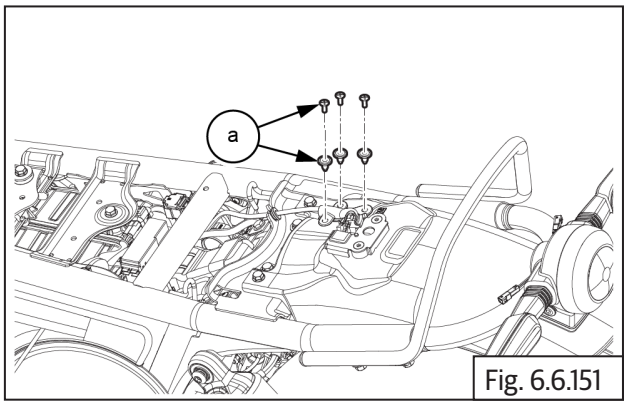

Fig. 6.6.151

	Minus Screw Driver

- Remove the cable cover **(a)**.

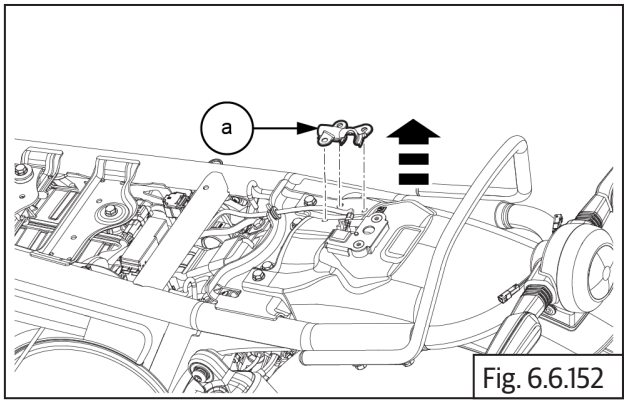

Fig. 6.6.152

- Loosen and remove 2 Nos bolts **(M6) (a)** holding seat latch assembly to frame.

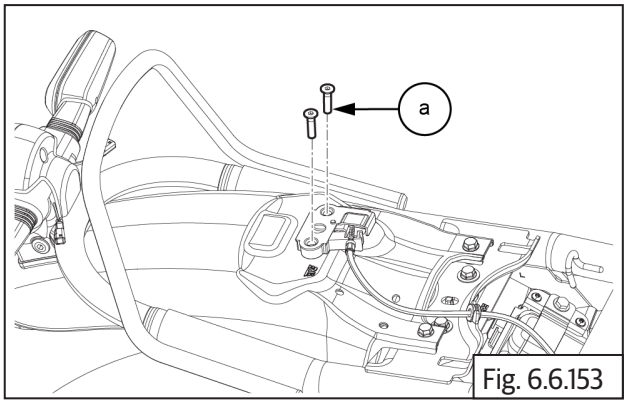

Fig. 6.6.153

	4 mm Allen socket with Ratchet

- Detach the grommet **(a)** from seat latch cable.

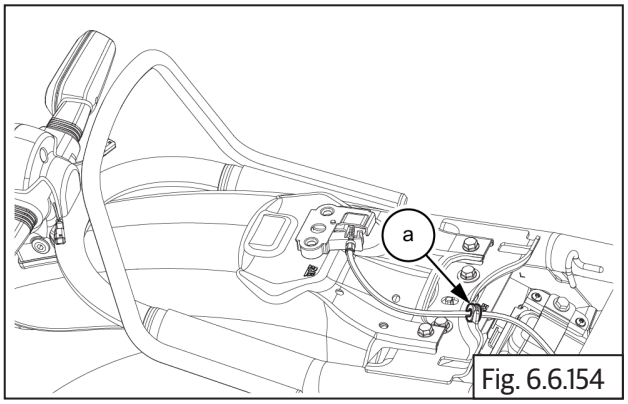

Fig. 6.6.154

- Remove the seat latch with cable **(a)** from rear mudguard.

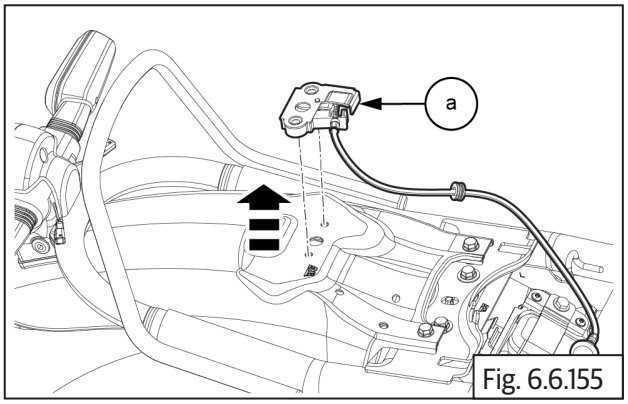

Fig. 6.6.155

- Loosen and remove 2 Nos flange head bolts **(M6) (a)** and nut plate **(b)** from mudguard sub assembly.

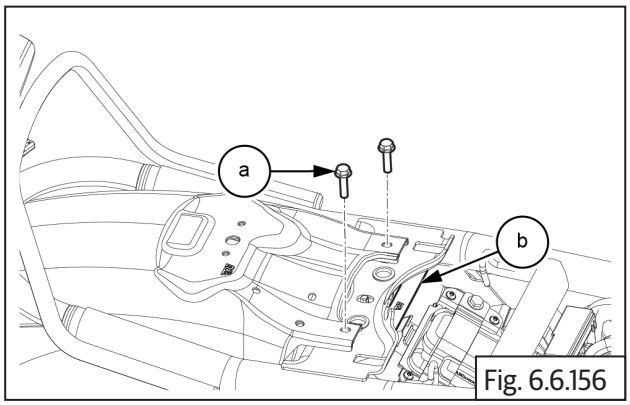

Fig. 6.6.156

	10 mm Socket with Ratchet.

- Loosen and remove 2 Nos flange head bolts **(M6) (a)** with washers from mudguard sub assembly.

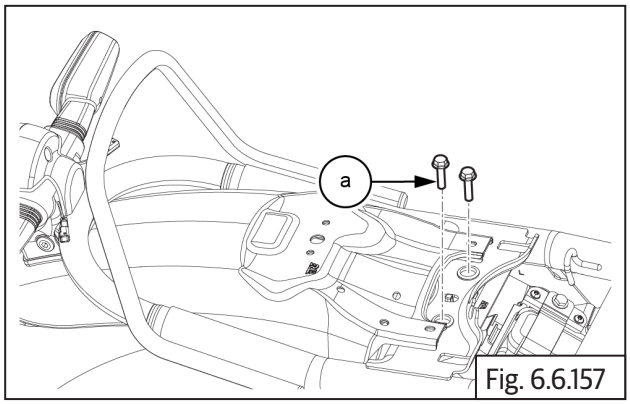

Fig. 6.6.157

	10 mm Socket with Ratchet.

- Disconnect rear harness coupler.

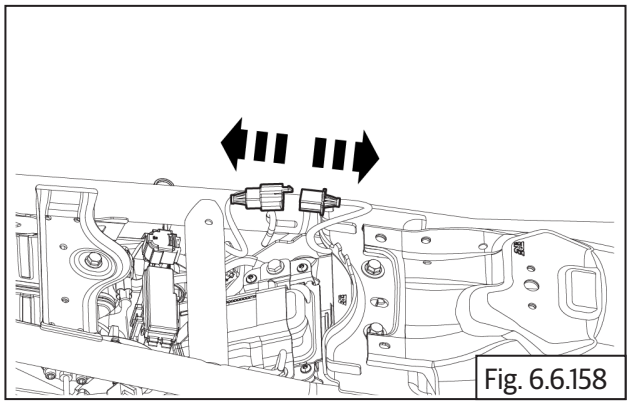
Fig. 6.6.158

- Remove the rear mudguard **(a)** from frame.

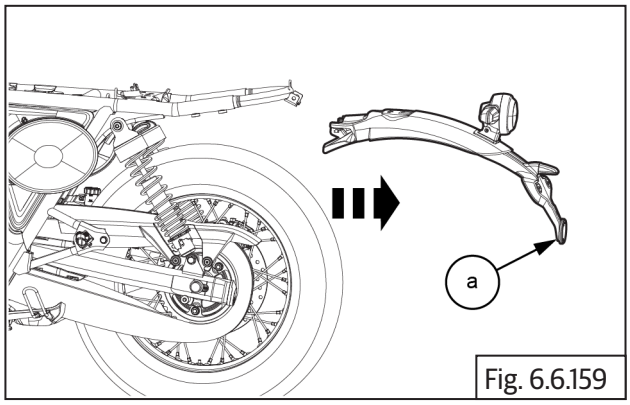

Fig. 6.6.159

- Loosen and remove 2Nos **(M6) (a)** collar bolts from rear mudflap.

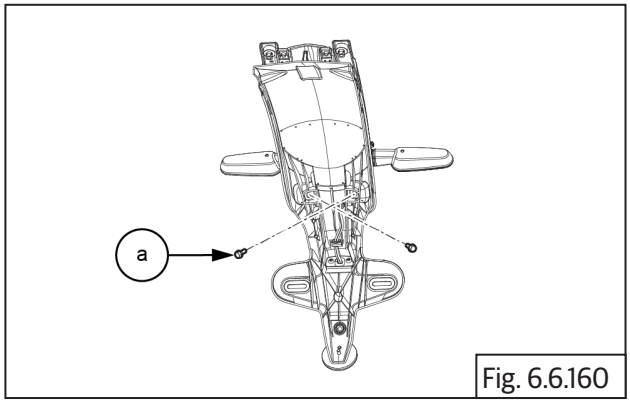

Fig. 6.6.160

	10 mm Socket with Ratchet.

- Disconnect the tail lamp connector.
- Separate the rear mudguard and mudflap.

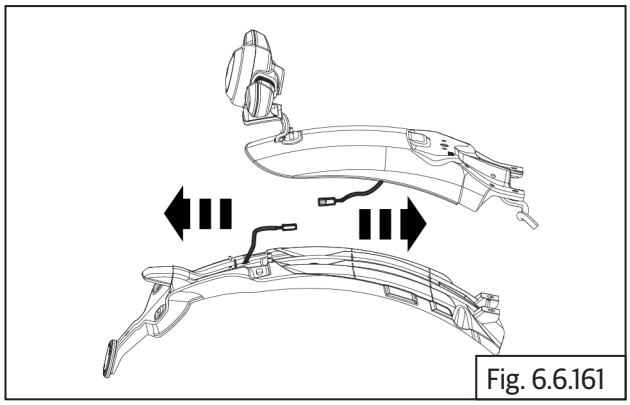

Fig. 6.6.161

- Loosen and remove 2Nos **(M5) (a)** button bolts from rear mudflap.

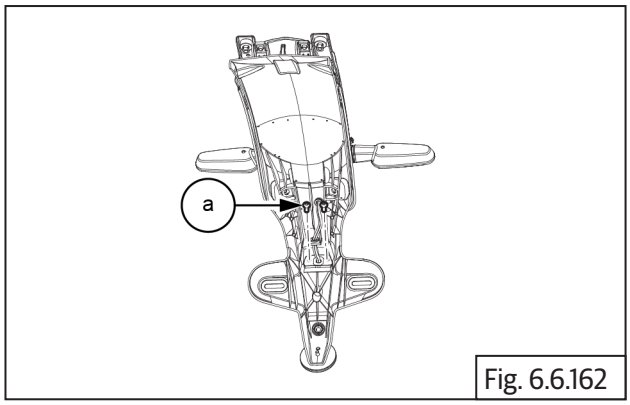

Fig. 6.6.162

	4 mm Allen socket with Ratchet

- Remove the license plate illuminator with harness (a) from rear mudflap.

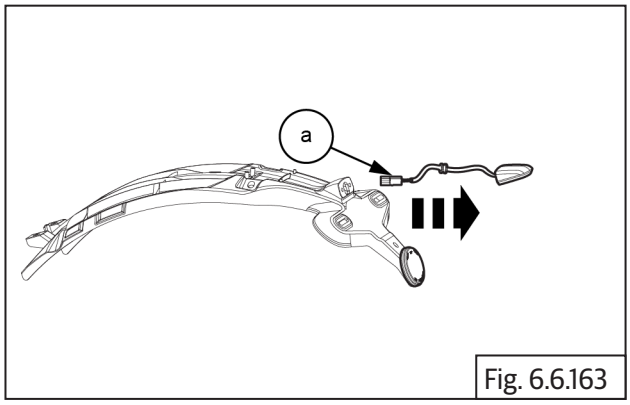

Fig. 6.6.163

- Disconnect the trafficator **(a)** and **(b)** connectors.

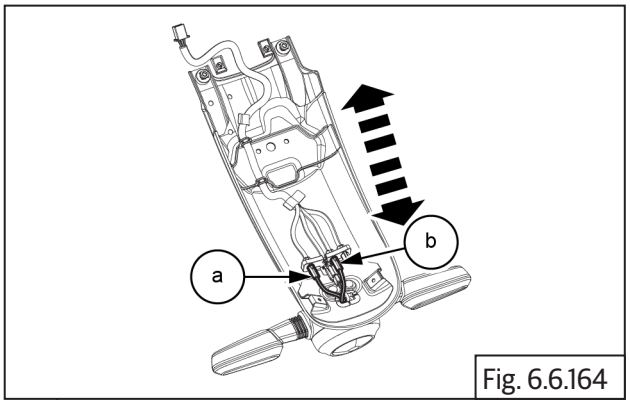

Fig. 6.6.164

- Disconnect the tail lamp **(a)** connectors.

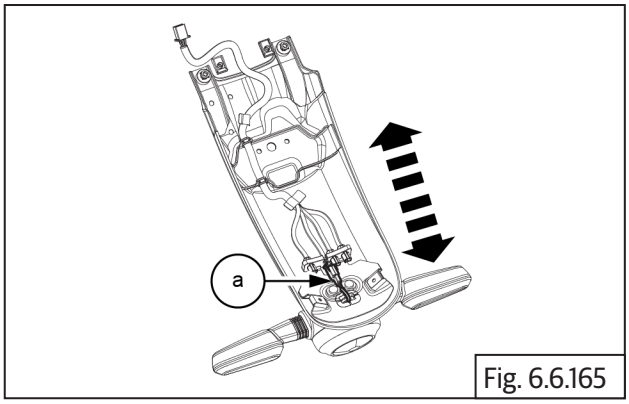

Fig. 6.6.165

- Slide out wiring harness from mudguard clips **(a)**.

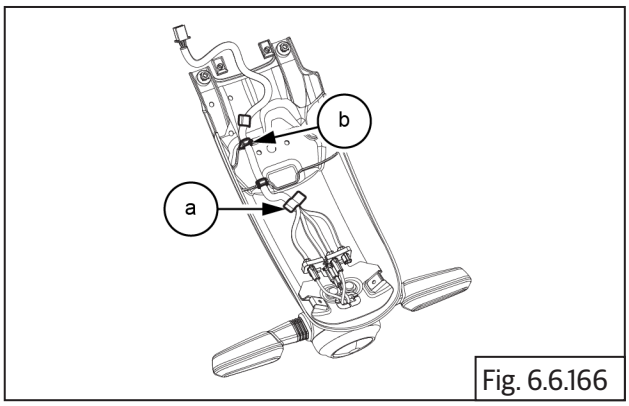

Fig. 6.6.166

- Remove tail lamp wiring harness **(a)** from rear mudguard .

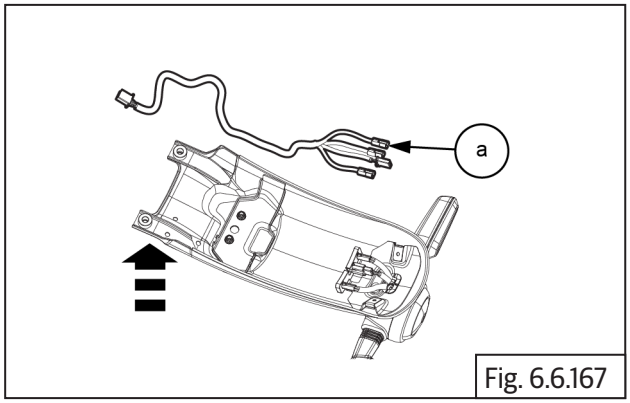

Fig. 6.6.167

- Loosen and remove 2 Nos button head screws **(M6) (a)** from rear tail lamp.

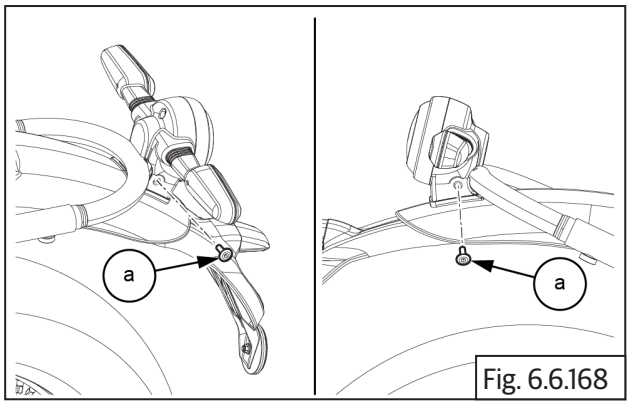

Fig. 6.6.168

	5 mm Allen socket with Ratchet

- Detach the rear tail lamp assembly **(a)** from rear mudguard.

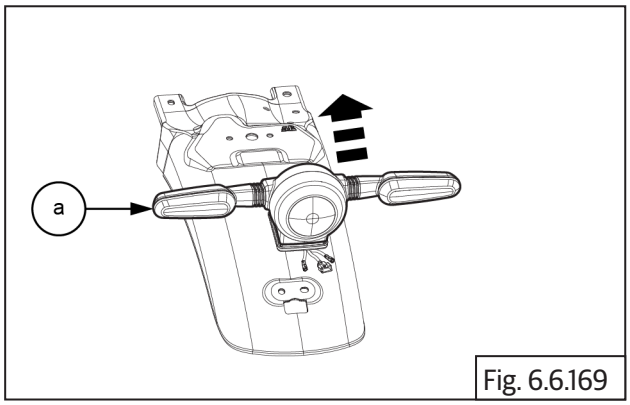

Fig. 6.6.169

- Remove the rubber **(a)** from tail lamp housing.

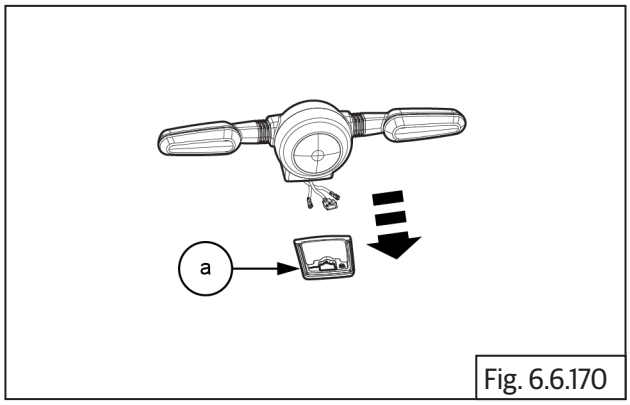

Fig. 6.6.170

6.6.7. Rear Mudguard Infill Cover

- Remove the following parts:
  - Side panel RH (Refer----------) .
  - Seat (Refer----------) .
  - Rear wheel (Refer----------).
  - Engine control unit (ECU)(Refer----------) .

⚠ CAUTION

Before disconnecting ECU from the wiring harness, the battery terminals must be disconnected from the battery.

- Loosen and remove 5 Nos hex flange bolts **(M6) (a)** with washers **(b)** from mudguard infill cover.

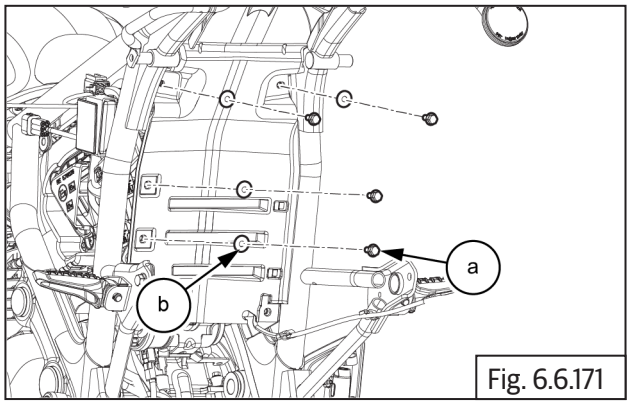

Fig. 6.6.171

	10 mm Socket with Ratchet

- Loosen and remove cap bolt **(M6) (a)** from reservoir bracket.

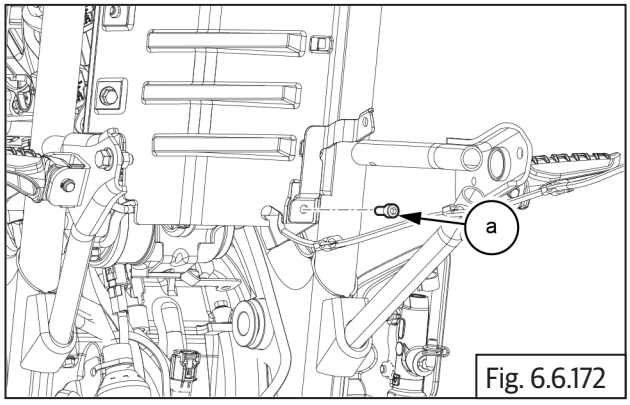

Fig. 6.6.172

	5 mm Allen socket with Ratchet

- Remove reservoir bracket **(a)** from infill cover.

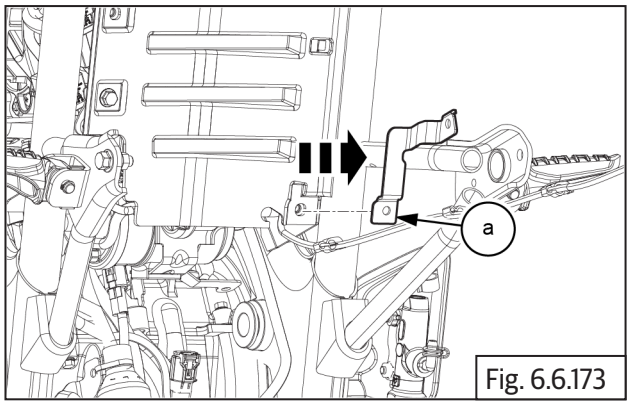

Fig. 6.6.173

- Remove infill cover **(a)** from chassis frame.

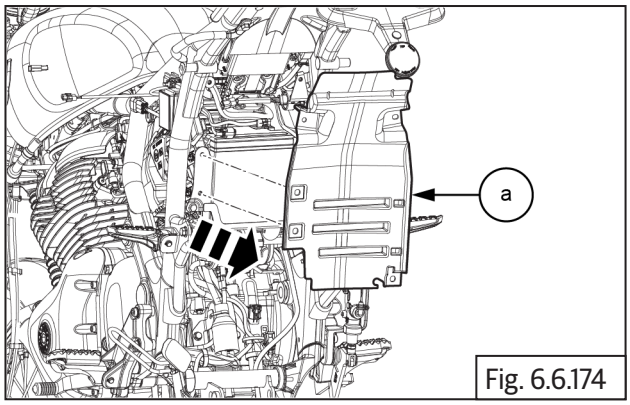

Fig. 6.6.174

6.6.8. Grab Handle

- Remove side panel RH (Refer----------).
- Remove seat (Refer----------).
- Loosen and remove 4Nos Hex head flange bolts **(M8) (a)** from grab handle .

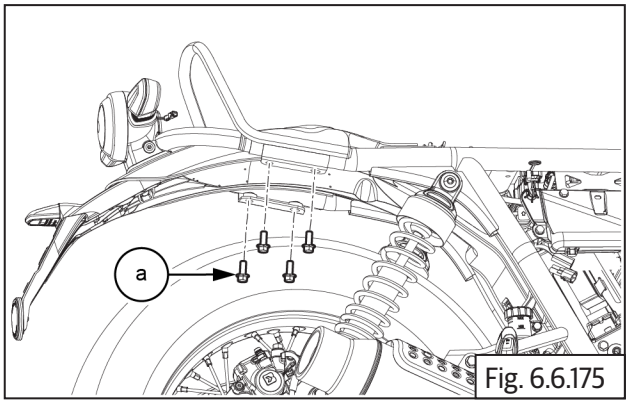

Fig. 6.6.175

	12 mm Socket with Ratchet

- Remove grab handle from rear chassis frame.

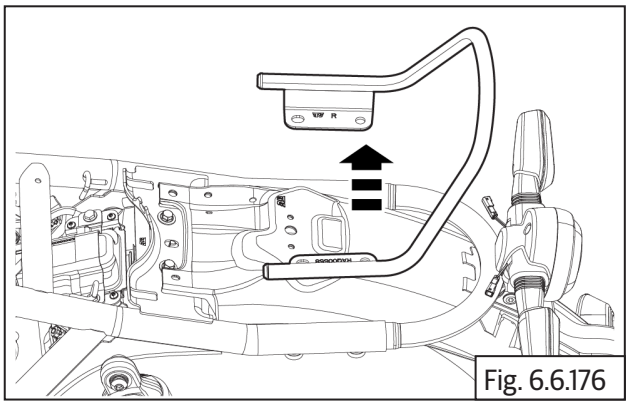
Fig. 6.6.176

Inspection

Mudguard/Reflector/Grab handle

- Clean Mudguard. Inspect for any scratches, cracks, damages on mudguard and replace if required.
- Inspect Infill rear mud cover for any cracks or damages. Replace if required.
- Inspect rear reflector for any cracks or damages. Replace if required.
- Inspect grab handle for any cracks, bends or damages and replace if required.

Front and Rear number plates

- Inspect number plates and bracket for rust formation and cracks. Replace if required.

Assembly

6.6.9. Grab Handle

- Position the grab handle onto the rear chassis frame.

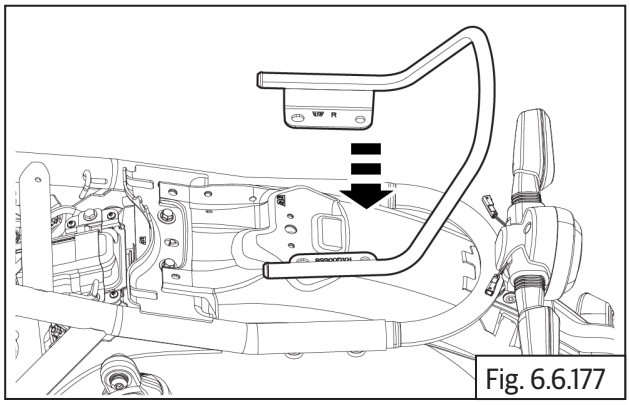

Fig. 6.6.177

- Insert and tighten 4Nos Hex head flange bolts **(M8) (a)** to secure the grab handle in place.

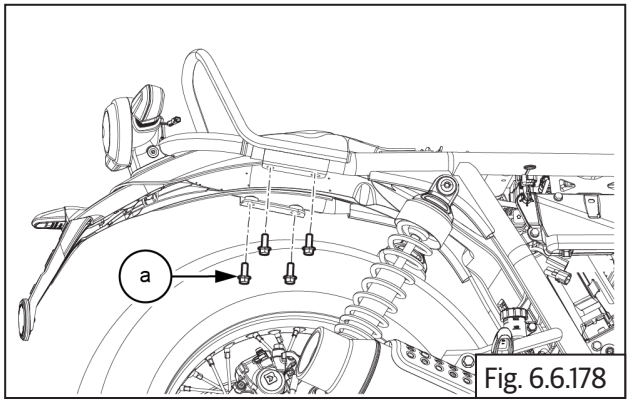

Fig. 6.6.178

	12 mm Socket with Ratchet
	34 Nm /3.4 kgf-m

- Install side panel RH (Refer----------).
- Install seat (Refer----------).

6.6.10. Rear Mudguard Infill Cover

- Fix the infill cover **(a)** to the chassis frame.

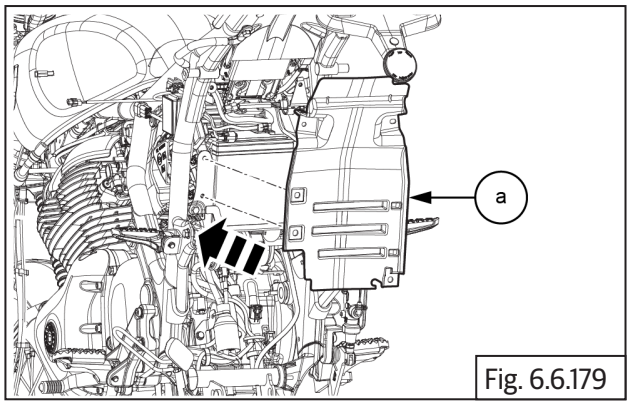

Fig. 6.6.179

- Fix the reservoir bracket **(a)** to the infill cover.

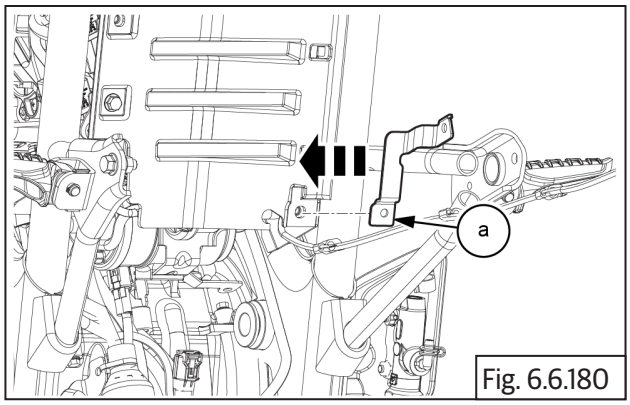

Fig. 6.6.180

- Locate and tighten the cap bolt **(M6) (a)** to the reservoir bracket.

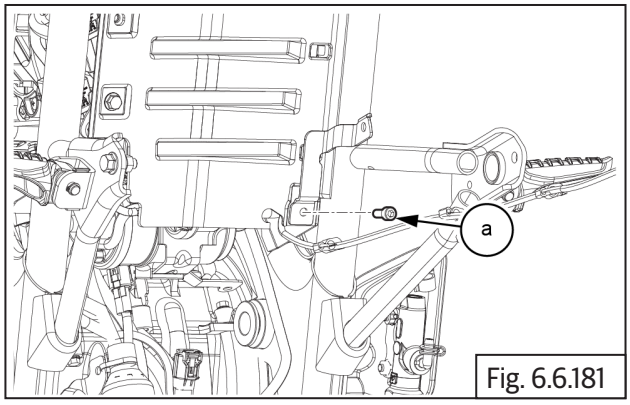

Fig. 6.6.181

	5 mm Allen socket with Ratchet
	3-5 Nm /0.3-0.5 kgf-m

- Locate and tighten 5 Nos hex flange bolts **(M6) (a)** with washers **(b)** to the mudguard infill cover.

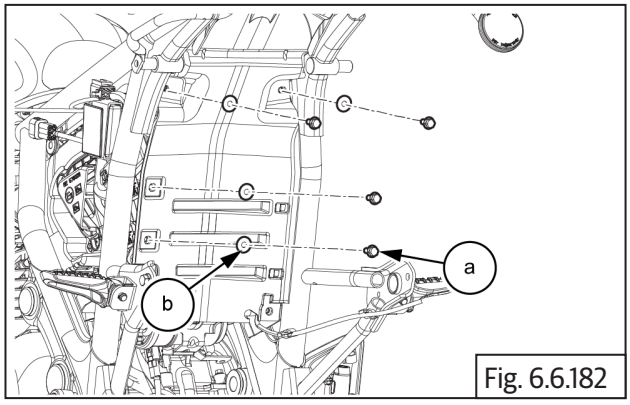

Fig. 6.6.182

	10 mm socket with Ratchet
	3-5 Nm /0.3-0.5 kgf-m

- Install the following parts:
  - Side panel RH (Refer----------) .
  - Seat (Refer----------) .
  - Rear wheel (Refer----------).
  - Engine control unit (ECU) (Refer----------)

6.6.11. Rear Mudguard

⚠ CAUTION

DO NOT over tighten bolts and nuts as it may crack or break the plastic parts and cause vibration and noise while driving.

- Insert the rubber **(a)** into the tail lamp housing.

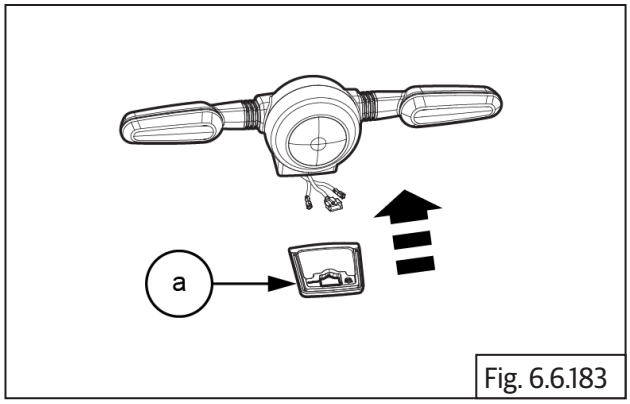

Fig. 6.6.183

- Locate the rear tail lamp assembly **(a)** to the rear mudguard .

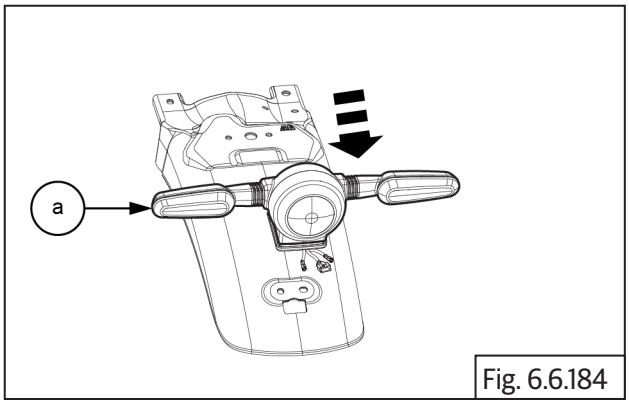

Fig. 6.6.184

- Locate and tighten the 2 Nos button head screws **(M6) (a)** into tail lamp.

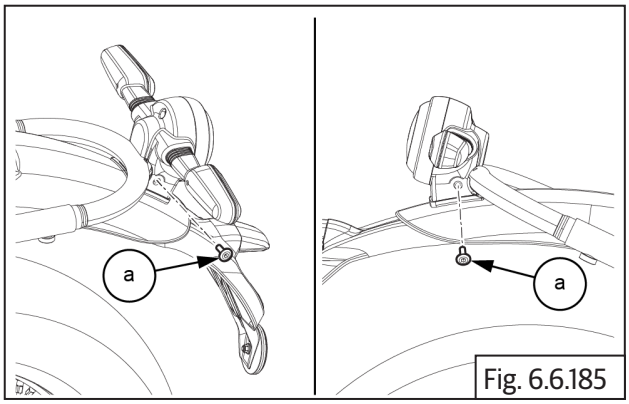

Fig. 6.6.185

	5 mm Allen socket with Ratchet

- Locate the tail lamp wiring harness **(a)** on rear mudguard.

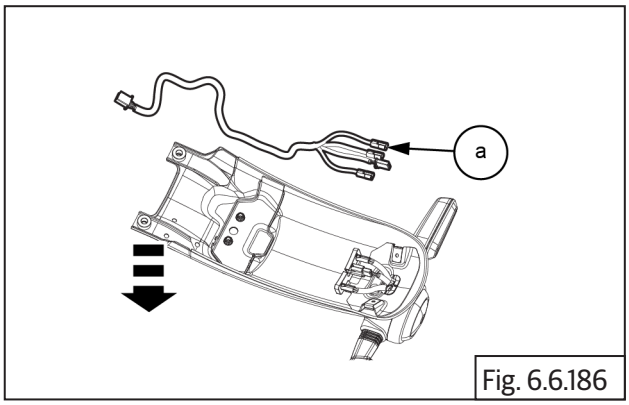

Fig. 6.6.186

- Slide the tail lamp wiring harness into the rear mudguard clips **(a)** and **(b)**.

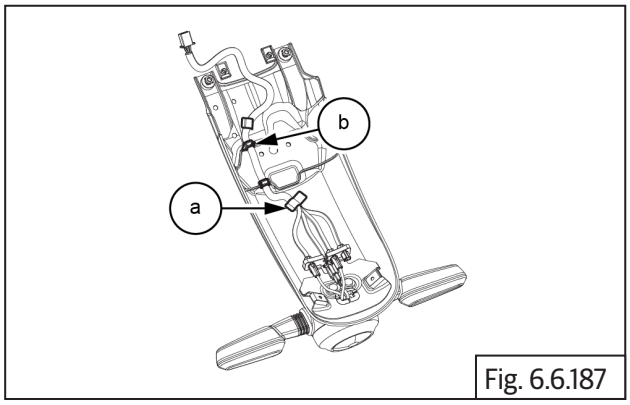

Fig. 6.6.187

- Connect the tail lamp **(a)** connectors.

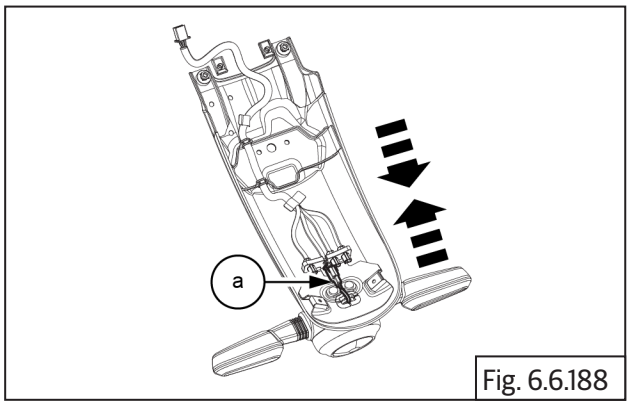

Fig. 6.6.188

- Connect the trafficator **(a)** and **(b)** connectors.

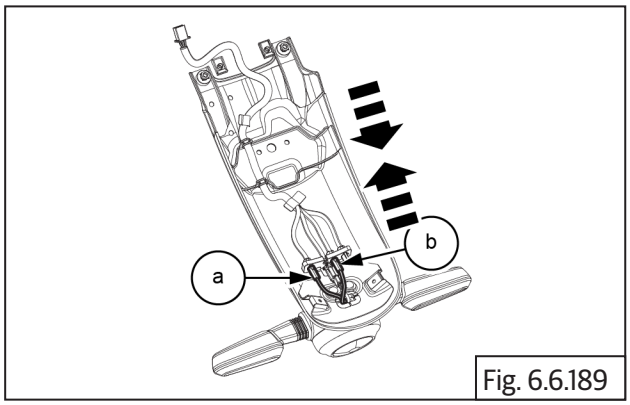

Fig. 6.6.189

- Fix the license plate illuminator with harness **(a)** to the rear mudflap.

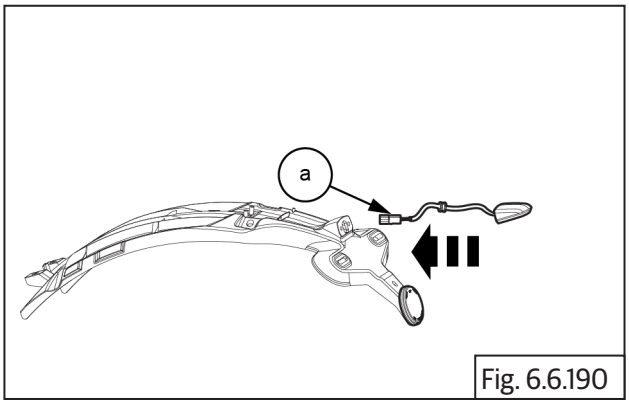

Fig. 6.6.190

- Locate and tighten 2 Nos button bolts **(M5) (a)** into the rear mudflap.

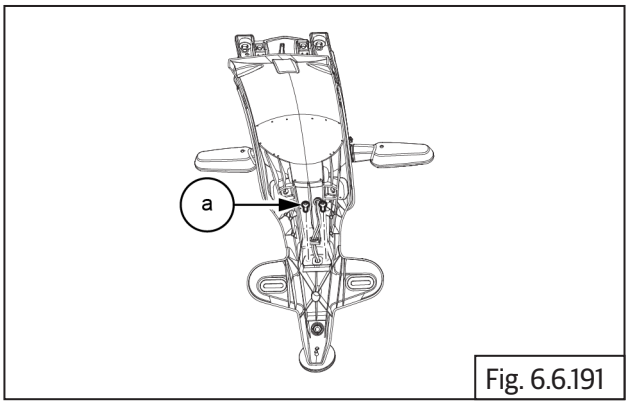

Fig. 6.6.191

	4 mm Allen Socket with Ratchet
	1.75 - 2 N-m / 0.17 - 0.2 kgf-m

- Connect the tail lamp connector.
- Fix the rear mudguard and mudflap together.

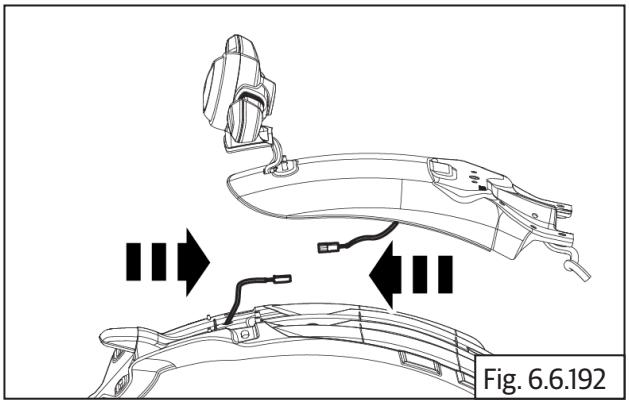
Fig. 6.6.192

- Locate and tighten 2 Nos collar head bolts **(M6) (a)** into the mudguard subassembly.

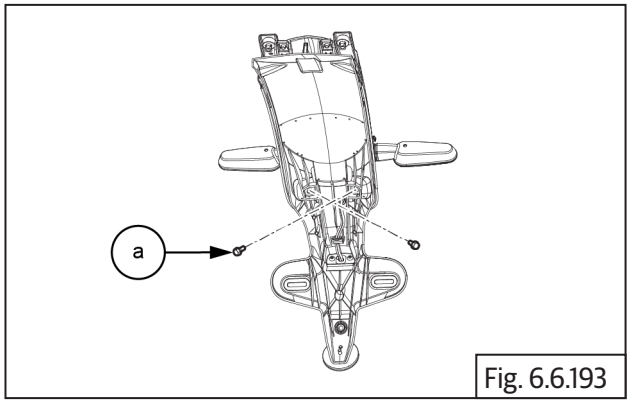

Fig. 6.6.193

	10 mm Socket with Ratchet.
	7 - 10 Nm / 0.7 - 1.0 kgf-m

- Locate the rear mudguard **(a)** into the frame.

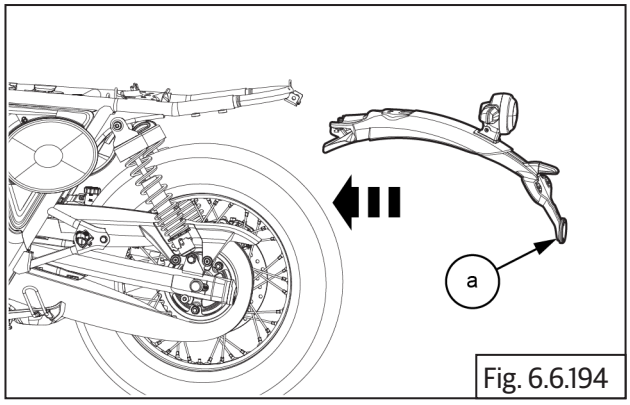

Fig. 6.6.194

- Connect the rear harness coupler.

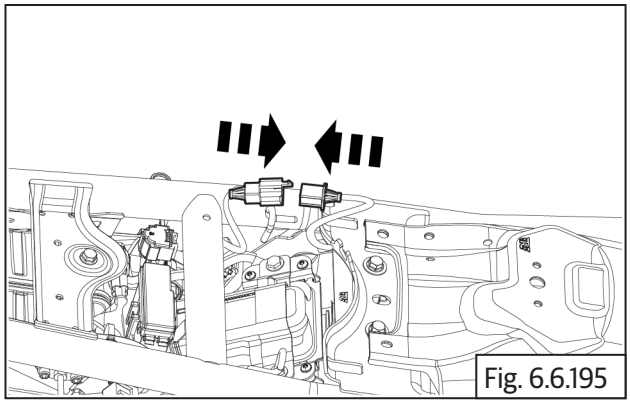
Fig. 6.6.195

- Locate and tighten 2 Nos flange head bolts **(M6) (a)** with washers into the mudguard subassembly.

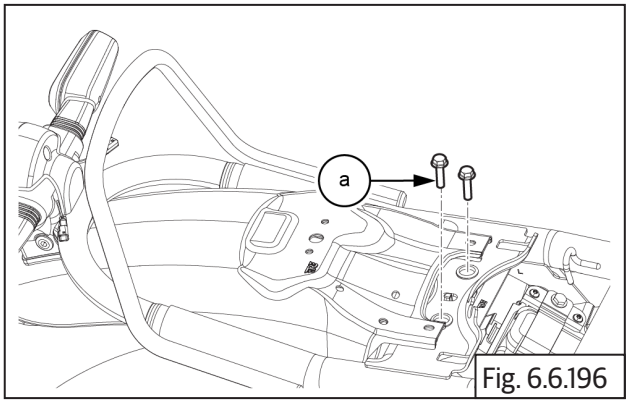

Fig. 6.6.196

	10 mm Socket with Ratchet.
	9 - 12 Nm / 0.9 - 1.2 kgf-m

- Locate and tighten the 2 Nos flange head bolts **(M6) (a)** and nut plate **(b)** into mudguard sub assembly.

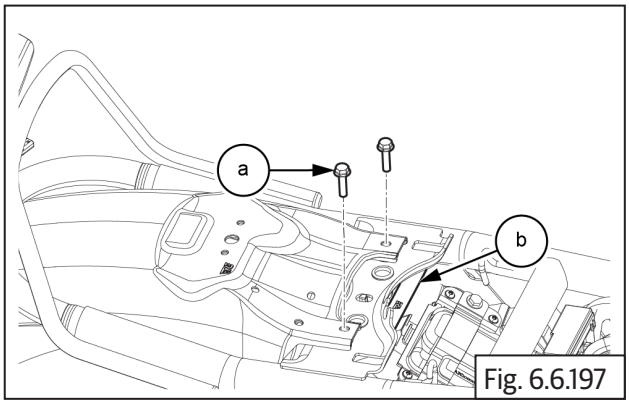

Fig. 6.6.197

	10 mm Socket with Ratchet.
	9 - 12 Nm / 0.9 - 1.2 kgf-m

- Install the seat latch with cable **(a)** onto the rear mudguard.

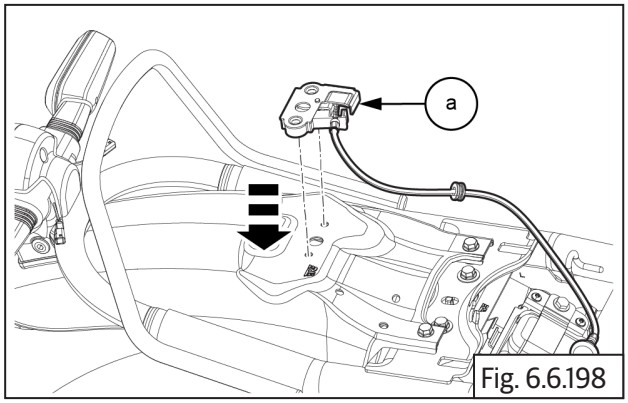

Fig. 6.6.198

- Attach the grommet **(a)** to the seat latch cable..

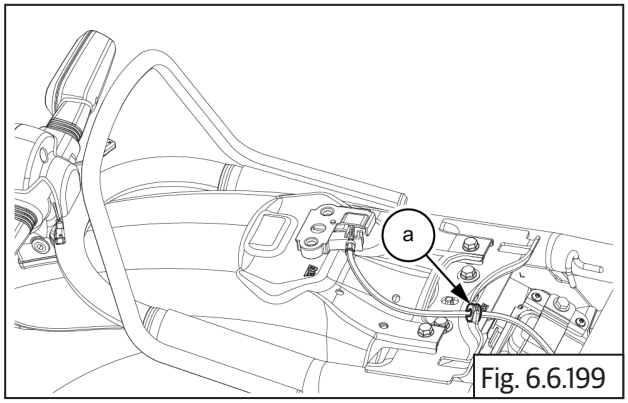

Fig. 6.6.199

- Secure the seat latch assembly to the frame by tightening and installing 2 Nos bolts **(M6) (a)**.

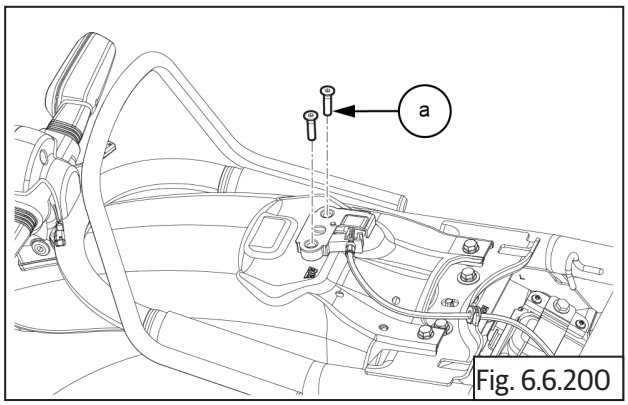

Fig. 6.6.200

	4 mm Hex socket with Ratchet
	4 - 6 Nm / 0.4 - 0.6 kgf-m

- Install the cable cover **(a)**.

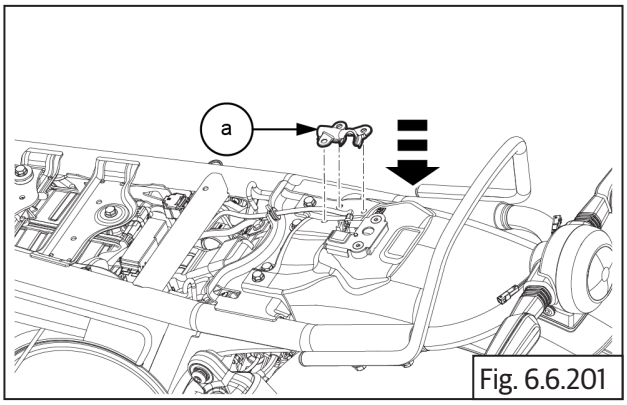

Fig. 6.6.201

- Locate and hand press the 3 Nos rivets **(a)** on cable cover.

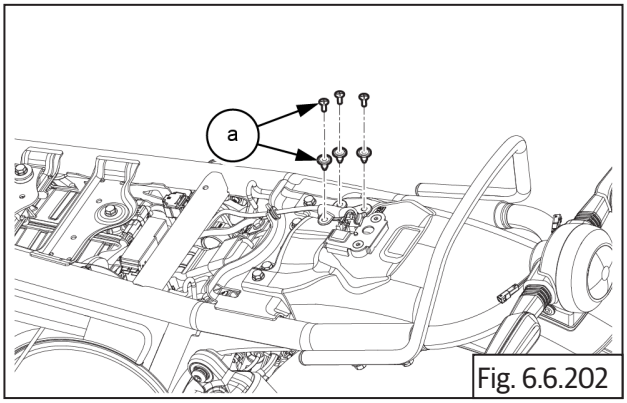

Fig. 6.6.202

- Install the following parts:
  - Side panel RH (Refer----------) .
  - Seat (Refer----------) .

6.6.12. Reflector Rear

- Locate the rear reflector **(a)** onto the rear mudguard.

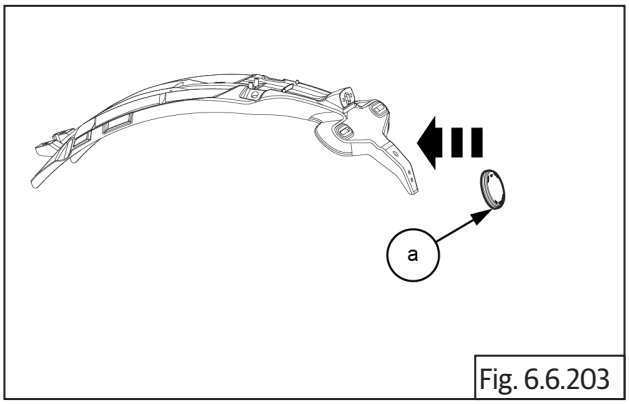

Fig. 6.6.203

- Secure the reflector with the Hex nut **(M5) (a)** and washer on the rear mudguard bottom. Tighten the nut to secure the reflector in place.

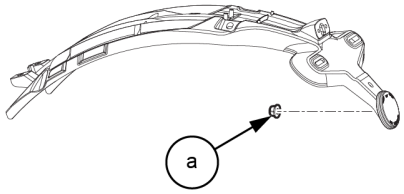

Fig. 6.6.204

	10 mm Hex socket with Ratchet
	1 - 3 Nm / 0.1 - 0.3 kgf-m

6.6.13. Front Mudguard

NOTE
• *Do not over tighten bolts and nuts into mudflaps and mudguards, it may crack or break the plastic parts and cause noise or vibration while driving.*

- Locate the brace **(a)** to the front mudguard.

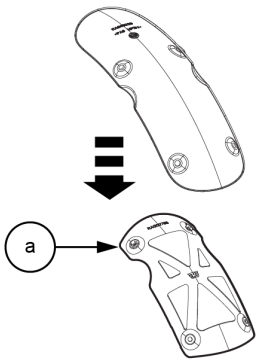

Fig. 6.6.205

- Locate the stay **(a)** to the front mudguard.

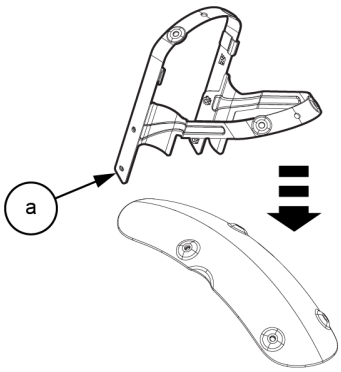

Fig. 6.6.206

- Locate and tighten 2 Nos button bolts **(M6) (a)** and **(b)** to secure the front guard.

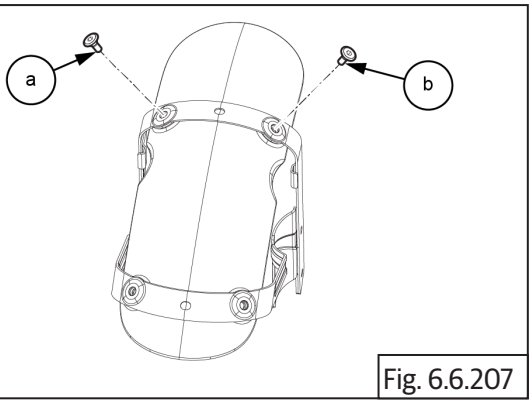

Fig. 6.6.207

	5 mm Allen socket with Ratchet
	7 - 10 Nm / 0.7 - 1.0 kgf-m

- Remove the mudflap **(a)** on the front mudguard.

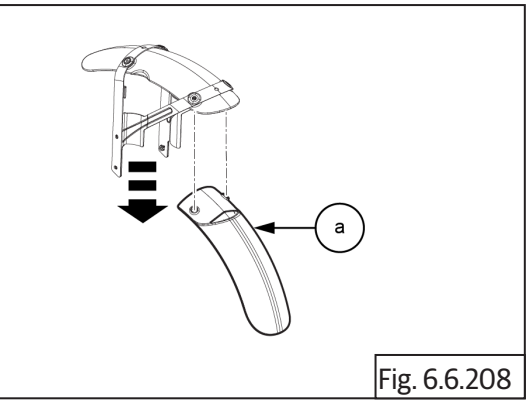

Fig. 6.6.208

- Align the mudflap and secure it with 2 Nos button bolts **(a) (M6)** with top hats **(b)** and tighten it.

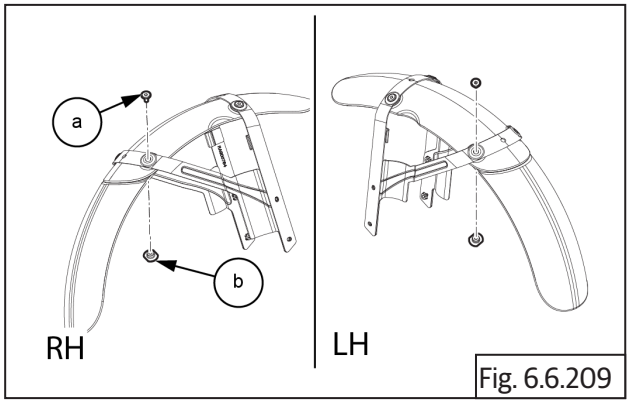

Fig. 6.6.209

	5 mm Allen socket with Ratchet
	7 - 10 Nm / 0.7 - 1.0 kgf-m

- Install the front mudguard onto the fork ends by tilting it to one side and lowering it into place.

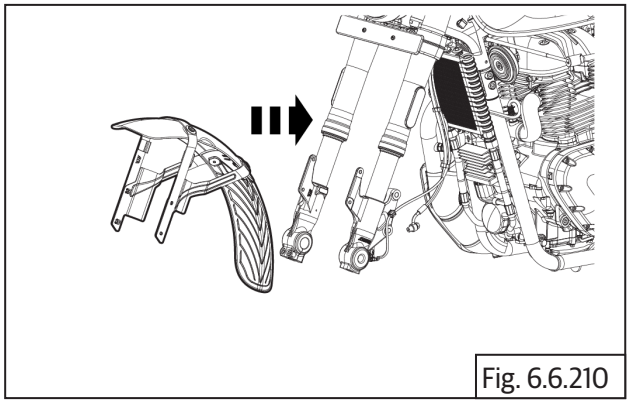
Fig. 6.6.210

- Locate and align the fork guard **(a)** to the mudguard stay C flange.

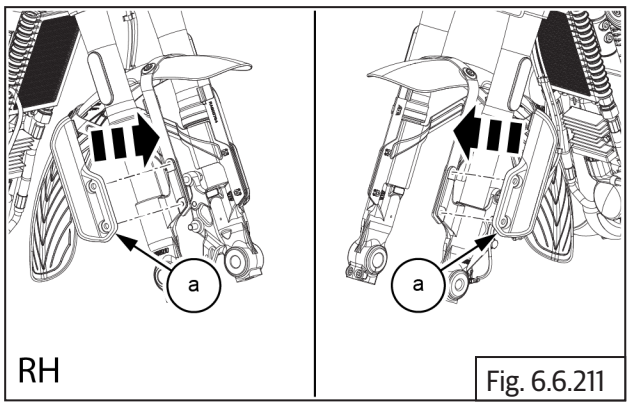

Fig. 6.6.211

- Locate and tighten the 2 Nos button head bolts **(M6) (a)** on both sides front mudguard.

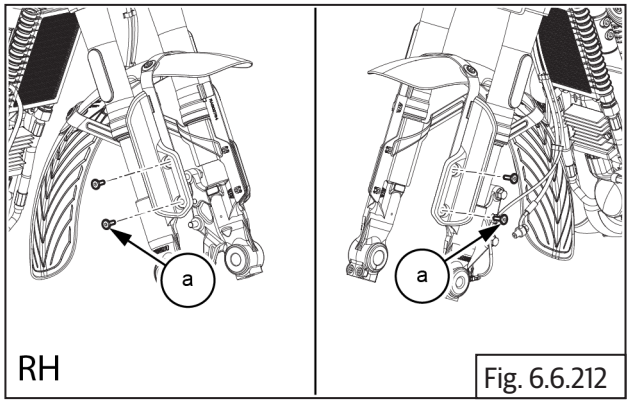

Fig. 6.6.212

	5 mm Allen socket with Ratchet
	7 - 10 Nm / 0.7 - 1.0 kgf-m

6.6.14. Rear Number Plate (USA)

- Locate the rear reflectors **(c)** to the bracket.
- Tighten 2Nos Hex nut **(M5) (a)** with washers **(b)** on the rear reflectors **(c)**.

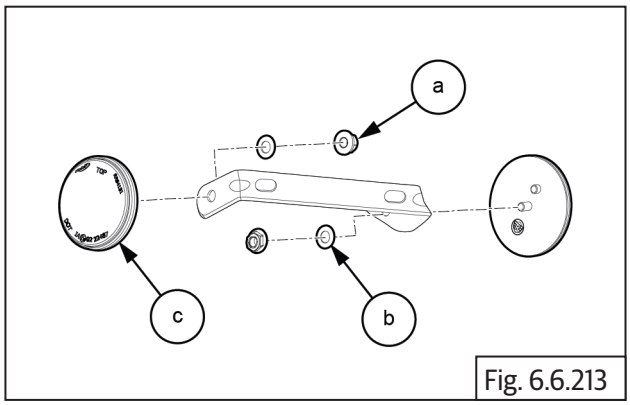

Fig. 6.6.213

	10 mm socket with Ratchet
	1 - 3 Nm / 0.1 - 0.3 kgf-m

- Locate the reflector bracket **(e)** to the mudflap.
- Locate the rear number plate **(d)** to the mudflap.
- Tighten and secure 2 Nos Button bolts **(M6) (a)** with 2 Nos washers **(c)** and 2 Nos nuts **(b)** on the rear number plate **(d)**.

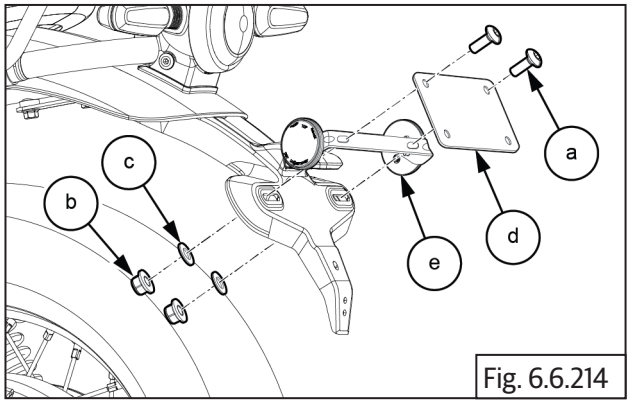

Fig. 6.6.214

	10 mm socket with Ratchet 5 mm Allen socket with Ratchet
	2.5 - 3 Nm / 0.25 - 0.3 kgf-m

6.6.15. Rear Number Plate (Europe)

- Attach the rear reflector **(c)** to the rear mudflap.
- Secure the rear reflector with the Hex nut **(b)**.
- Attach the reflector bracket **(d)** to the mudflap.
- Secure the reflector bracket with the hex socket bolts **(M5) (a)** and nuts **(b)**.

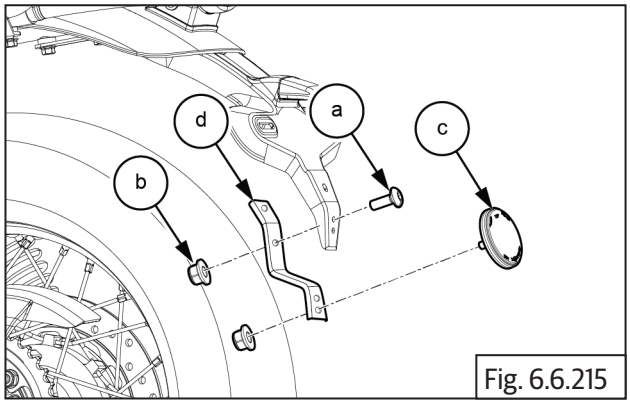

Fig. 6.6.215

	10 mm socket with Ratchet
	1.5 - 2 Nm / 0.15 - 0.2 kgf-m

- Locate the rear number plate **(d)** to the mudflap.
- Secure the rear number plate with 3 Nos nuts **(b)**, 2 Nos washers **(c)**, and 3 Nos Button bolts **(M6) (a)**.

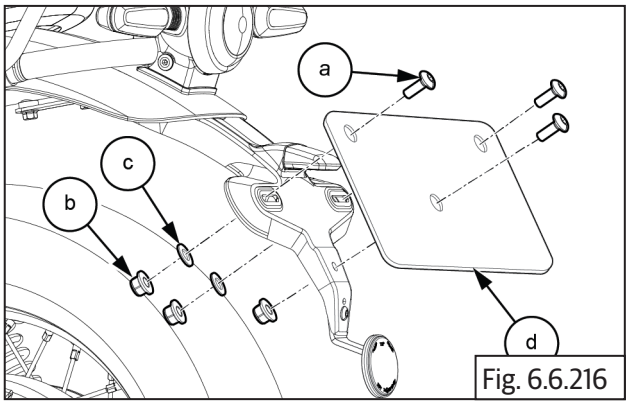

Fig. 6.6.216

	10 mm socket with Ratchet 5 mm Allen socket with Ratchet
	2.5 - 3 Nm / 0.25 - 0.3 kgf-m

6.6.16. Front Number Plate

- Locate the number plate bracket to the bottom yoke **(a)**.

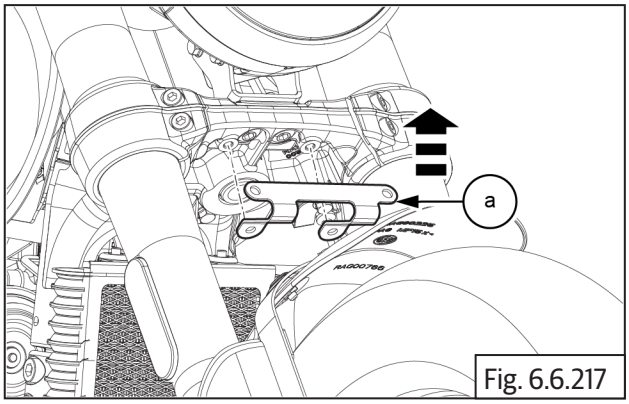

Fig. 6.6.217

- Locate and tighten 2 Nos Hex head collar bolts **(M6) (a)** on the number plate bracket.

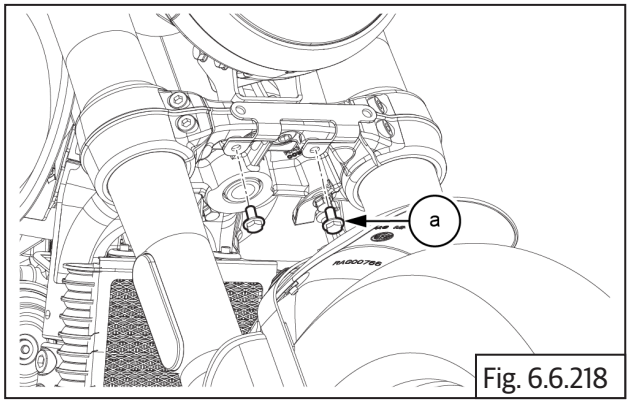

Fig. 6.6.218

	10 mm Socket with Ratchet
Torque	9 - 12 Nm / 0.9 - 1.2 kgf-m

SIDE PANELS AND SEAT

CONTENTS **PAGE**

6.7 Side Panels and Seat 428

Dismantling..... 428

6.7.1. Side Panel RH 429

6.7.2. Seat..... 429

6.7.3. Seat Latch..... 429

6.7.4. Side Panel LH..... 431

Inspection 432

Assembly 432

6.7.5. Side Panel LH..... 432

6.7.6. Seat Latch..... 433

6.7.7. Seat..... 434

6.7.8. Side Panel RH 434

6.7 Side Panels and Seat

Dismantling

6.7.1. Side Panel RH

- Insert ignition key **(a)** and turn anticlockwise to unlock and remove side panel RH from motorcycle.

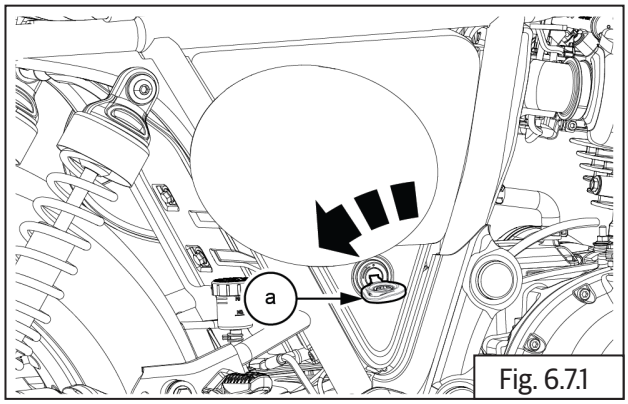

Fig. 6.7.1

- Gently Pull the RHS side panel **(a)** outside for opening the same.

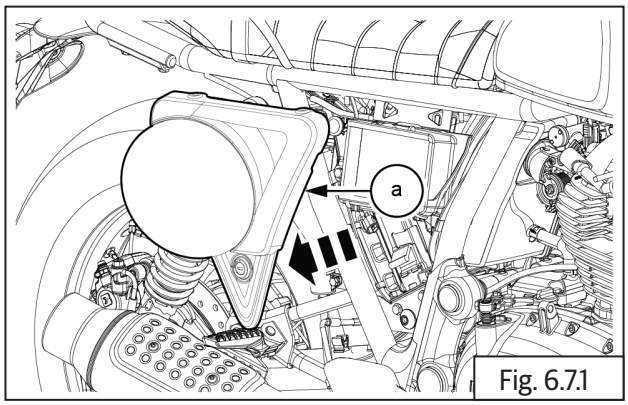

Fig. 6.7.1

- Remove 2Nos grommets **(a)** from RH side panel top**.**

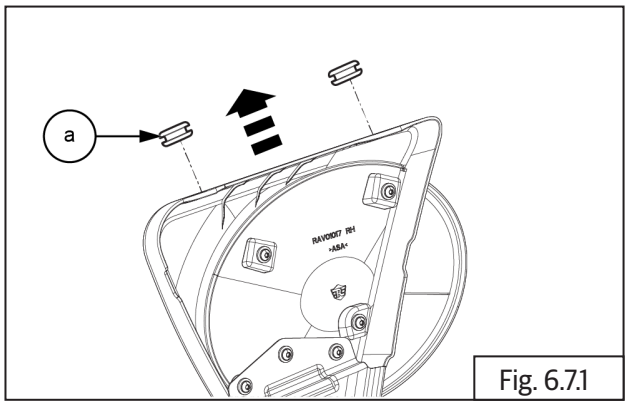

Fig. 6.7.1

- Loosen and remove the nut **(a)** from side panel lock **(b).**
- Remove the lock **(b)** from side panel bracket.

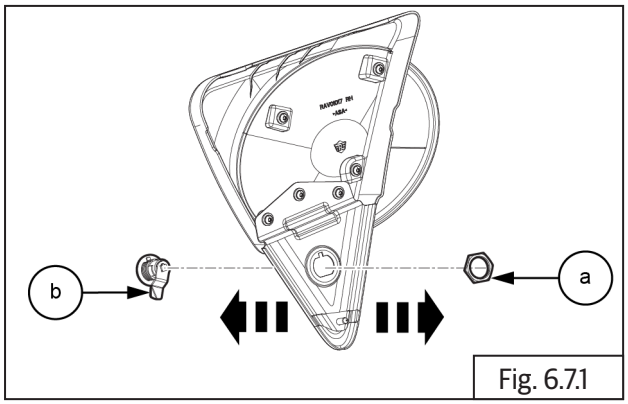

Fig. 6.7.1

	27mm Combination Spanner

- Remove 3 Nos screws **(a)** from RH side panel bracket **(b)**.
- Remove bracket from RH side panel **(b).**

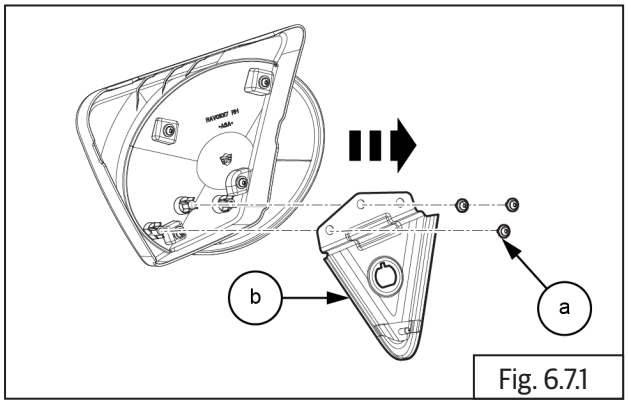

Fig. 6.7.1

	T25 Torx Socket with Ratchet

- Remove 4Nos screws **(a)** from RH side panel **(b)**.
- Remove the ovel number board **(c)** from RH side panel **(b)**.

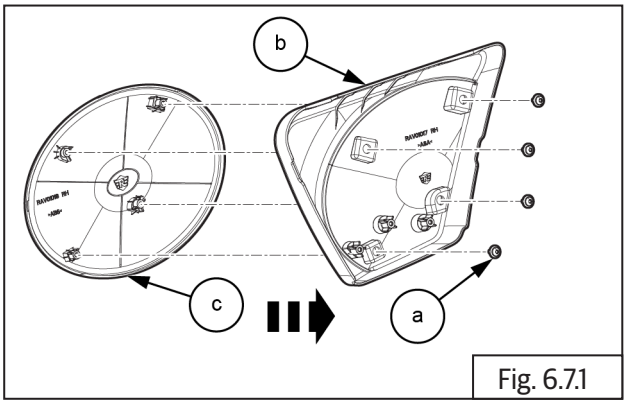

Fig. 6.7.1

	T25 Torx Socket with Ratchet

6.7.2. Seat

- Seat lock is located near utility box.
- Pull/Release seat lock **(a)** to remove seat from motorcycle.

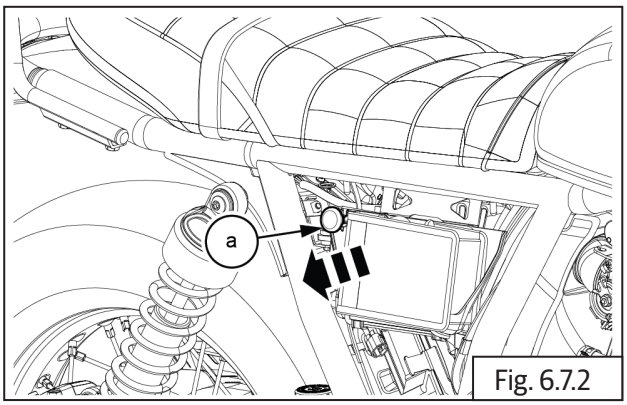

Fig. 6.7.2

⚠ CAUTION

Please Take care while disassembling and assembling the seats, and sheet metal parts, as any sharp edges will lead to injuries.

- Slide the seat **(a)** backward direction to detach the seat from frame.

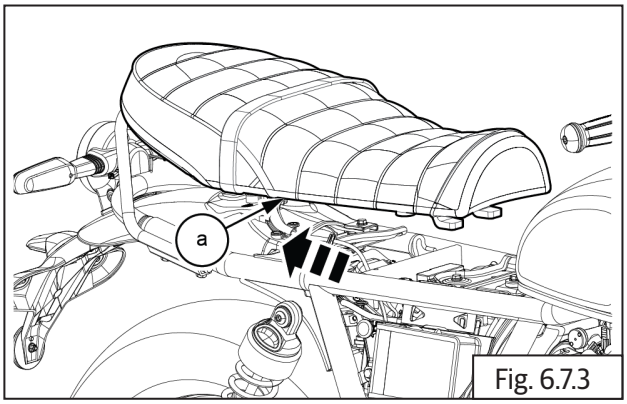

Fig. 6.7.3

NOTE

- *Place the seat in a safe location to prevent from scratches and dirt.*

6.7.3. Seat Latch

- The seat latch assembly **(a)** is fixed on frame near engine control unit (ECU).

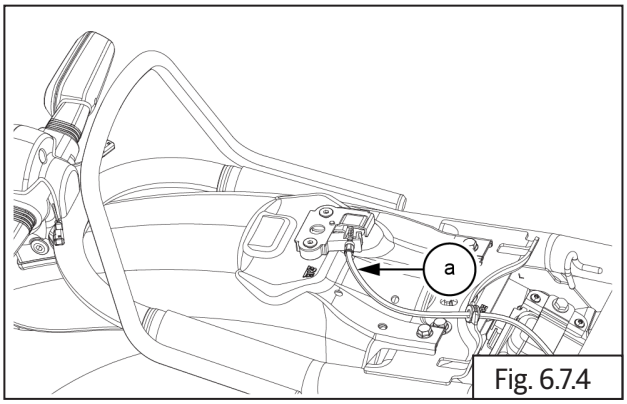

Fig. 6.7.4

- Gently release the cable **(a)** from utility box by pulling it out carefully.

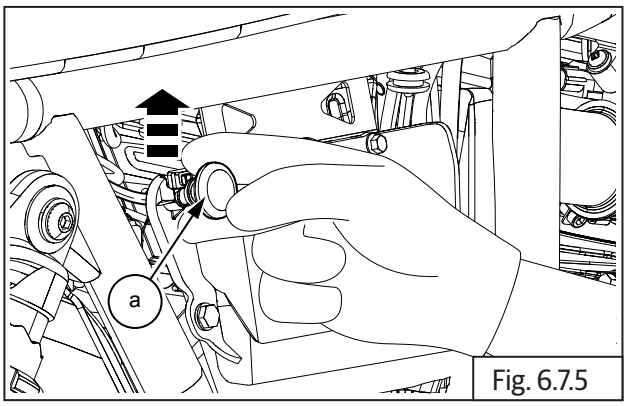

Fig. 6.7.5

- Loosen and remove 3 Nos rivet **(a)** from cable cover .

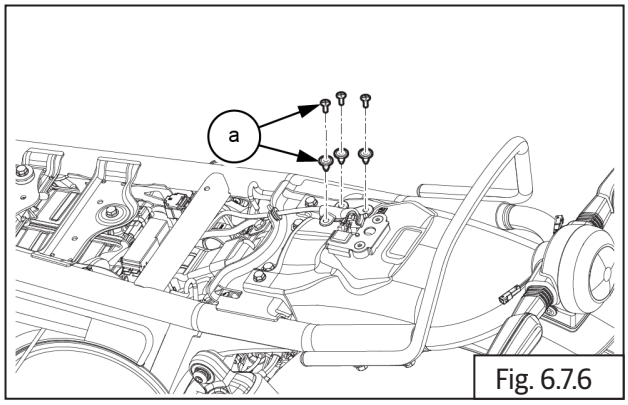

Fig. 6.7.6

	Minus Screw Driver

- Remove the cable cover **(a)**.

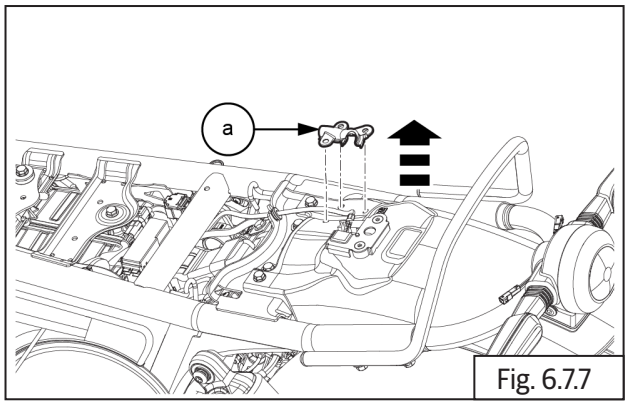

Fig. 6.7.7

- Loosen and remove 2 Nos bolts **(M6) (a)** holding seat latch assembly to frame.

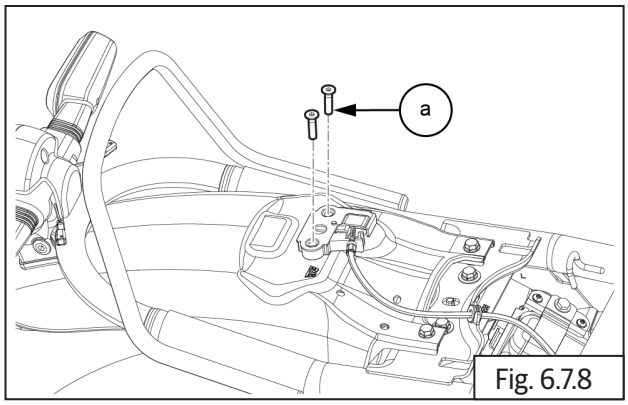

Fig. 6.7.8

	4 mm Allen socket with Ratchet

- Detach the grommet **(a)** from seat latch cable.

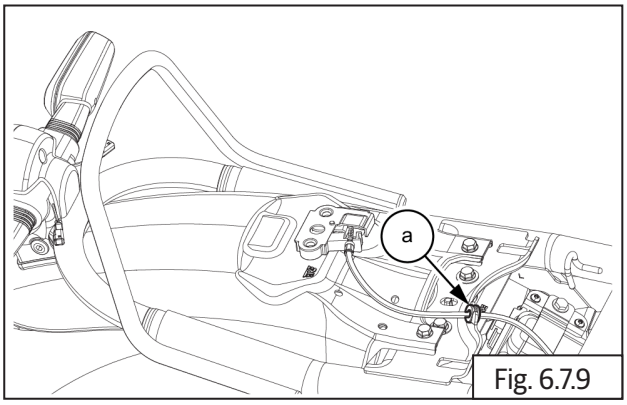

Fig. 6.7.9

- Remove the seat latch with cable **(a)** from rear mudguard.

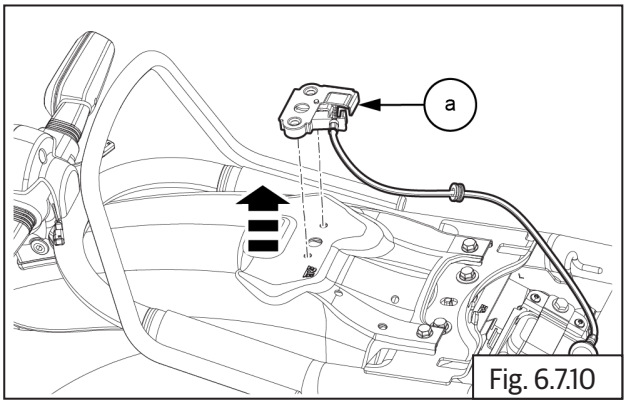

Fig. 6.7.10

- Detach the cable **(a)** from seat latch.

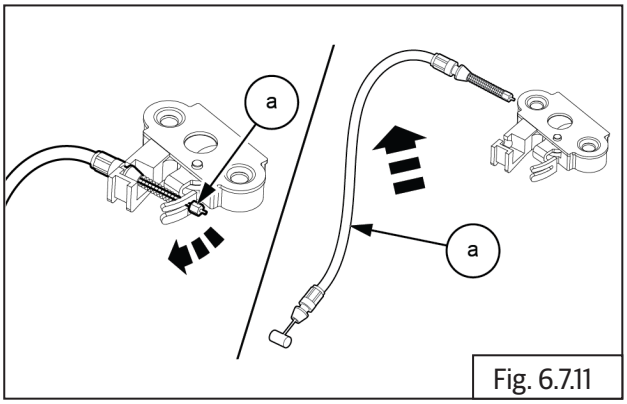

Fig. 6.7.11

6.7.4. Side Panel LH

- Loosen and remove button head bolts **(M5) (a)** LH side panel.

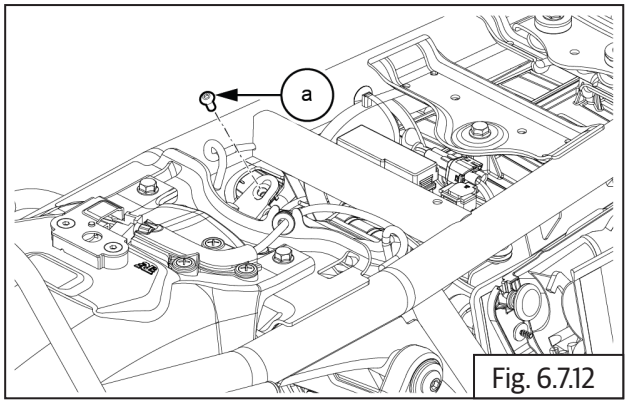

Fig. 6.7.12

	4 mm Allen socket with Ratchet

- Gently slide out LH side panel **(a)** from frame in side direction and pull up direction.

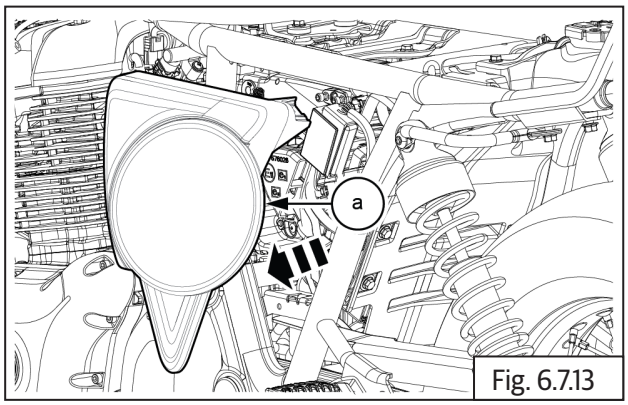

Fig. 6.7.13

- Remove boot from LH side panel **(a)**.
- Remove clip nut **(M5) (b)** from LH side panel.

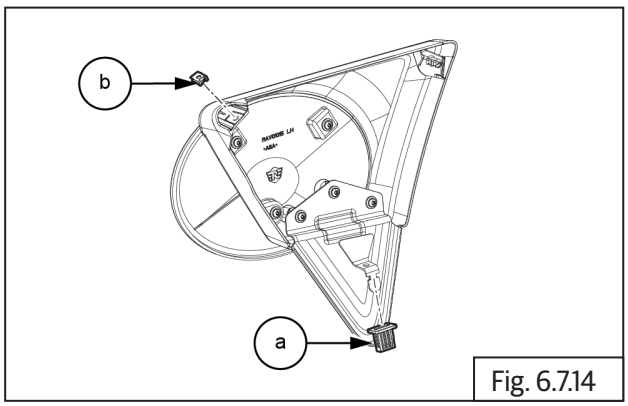

Fig. 6.7.14

- Remove 3 Nos screws **(a)** from LH side panel bracket **(b)**.
- Remove bracket from LH side panel **(b).**

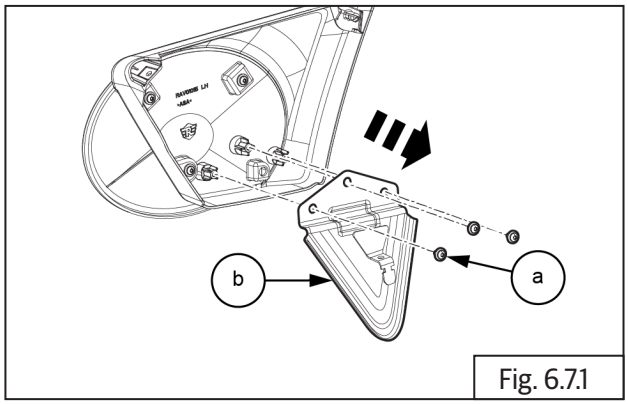

Fig. 6.7.1

	T25 Torx Socket with Ratchet

- Remove 4Nos screws **(a)** from LH side panel **(b)**.
- Remove the ovel number board **(c)** from LH side panel **(b)**.

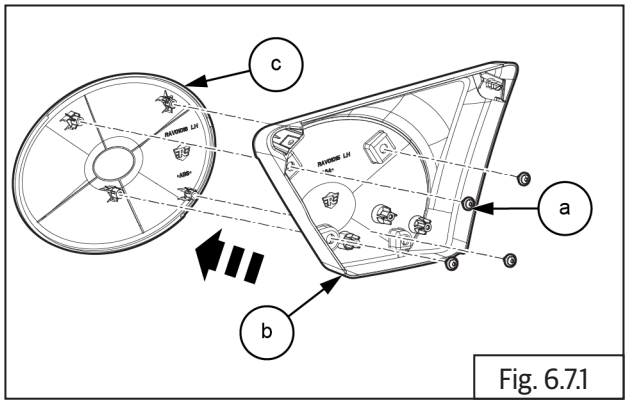

Fig. 6.7.1

	T25 Torx Socket with Ratchet

Inspection

- Inspect and replace seat latch assembly if stuck or jammed.
- Inspect latch cable for free movement/broken inner strands. Replace seat latch assembly if cable is damaged.

Assembly

6.7.4. Side Panel LH

⚠ CAUTION
DO NOT over tighten bolts and nuts as it may crack or break the plastic parts and cause vibration and noise while driving.

- Install oval number board **(c)** onto LH side panel **(b)**.
- Secure LH side panel **(b)** in place with 4 screws **(a)**.

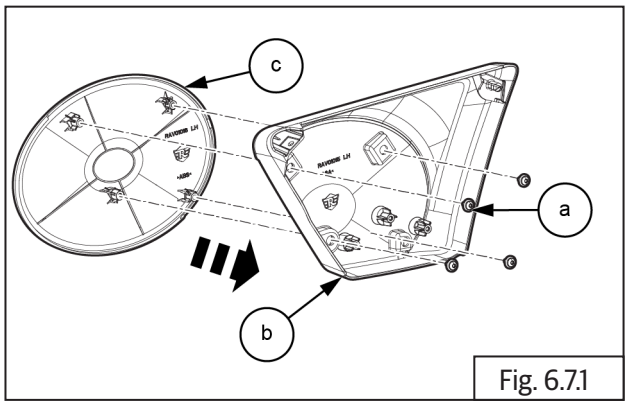

Fig. 6.7.1

	T25 Torx Socket with Ratchet
	1.5 - 2 Nm / 0.15 - 0.2 kgf-m

- Attach bracket to RH side panel **(b)** and secure with 3 screws **(a)**.

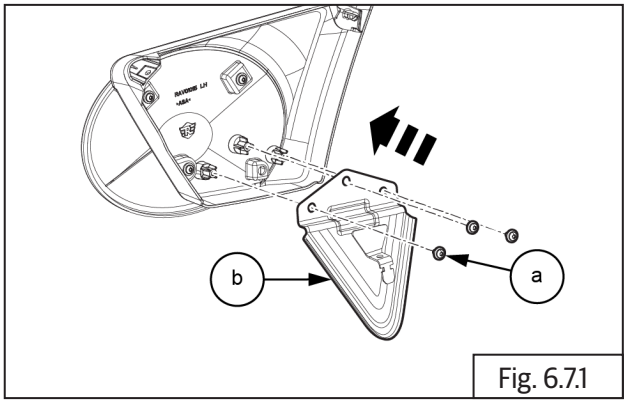

Fig. 6.7.1

	T25 Torx Socket with Ratchet
	1.5 - 2 Nm / 0.15 - 0.2 kgf-m

- Install clip nut **(M5) (b)** onto LH side panel **(a)**.
- Place boot onto LH side panel **(a)**.

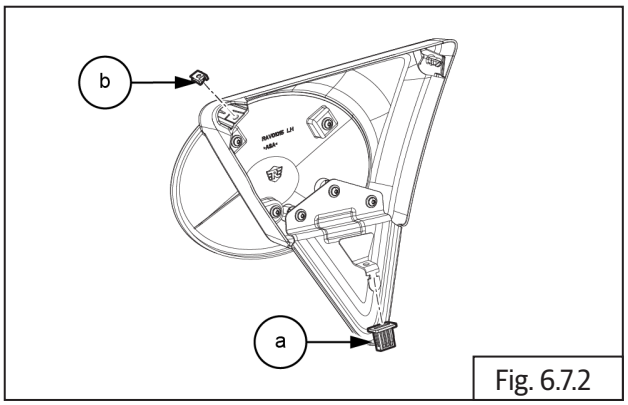

Fig. 6.7.2

- Carefully slide side panel LH **(a)** back into frame.

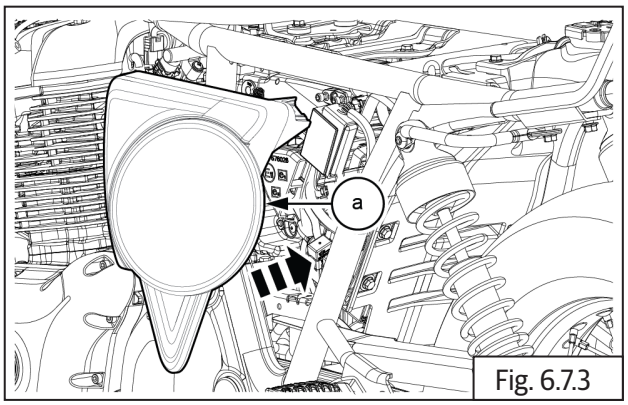

Fig. 6.7.3

- Tighten and secure button head bolts **(M5) (a)** on LH side panel.

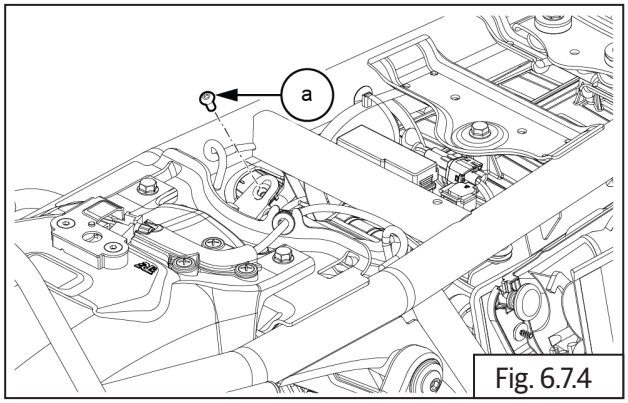

Fig. 6.7.4

	4mm Allen socket with Ratchet
	2 - 3 Nm / 0.2 - 0.3 kgf-m

6.7.3. Seat Latch

- Attach the cable **(a)** to the seat latch.

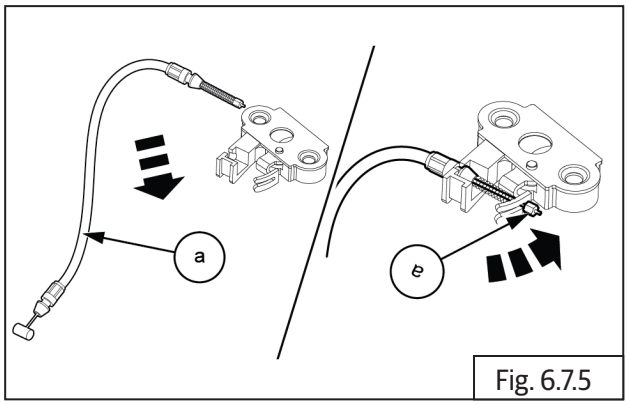

Fig. 6.7.5

- Install the seat latch with cable **(a)** onto the rear mudguard.

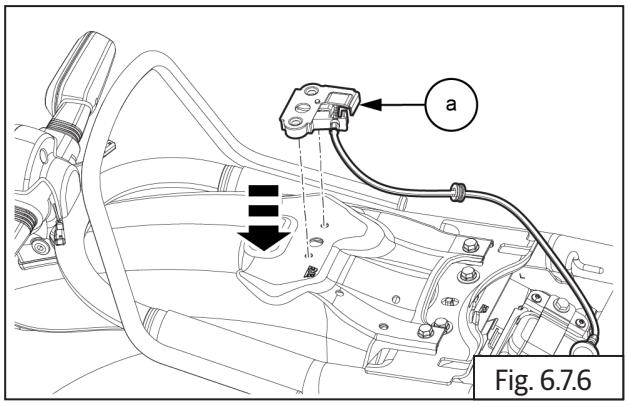

Fig. 6.7.6

- Attach the grommet **(a)** to the seat latch cable..

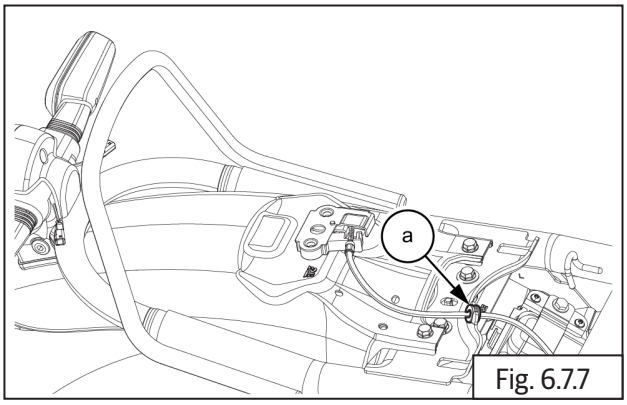

Fig. 6.7.7

- Secure the seat latch assembly to the frame by tightening and installing 2 Nos bolts **(M6) (a)**.

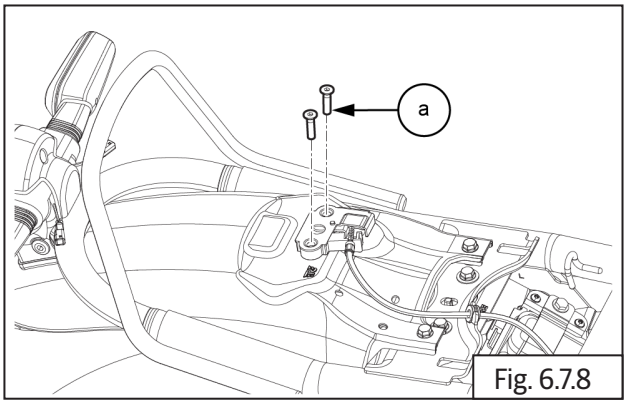

Fig. 6.7.8

	4 mm Hex socket with Ratchet
	4 - 6 Nm / 0.4 - 0.6 kgf-m

- Install the cable cover **(a)**.

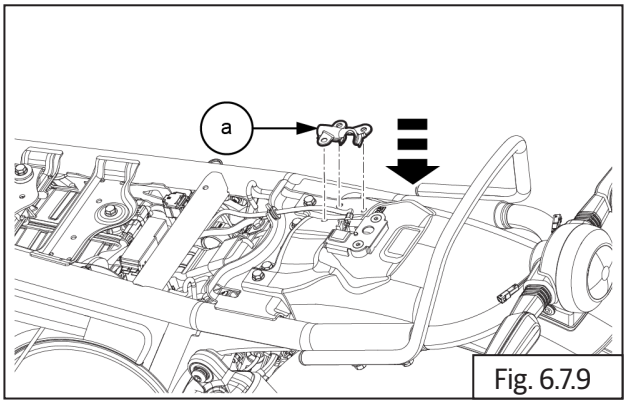

Fig. 6.7.9

- Locate and hand press the 3 Nos rivets **(a)** on cable cover.

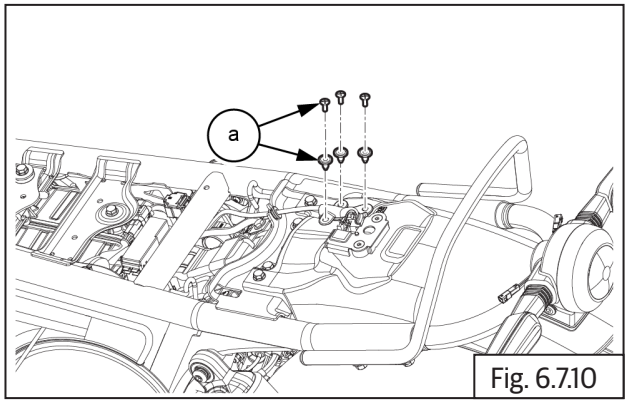

Fig. 6.7.10

- Route the cable assembly **(a)** through frame and locate cable outer into slot in seat latch and gently press in place.

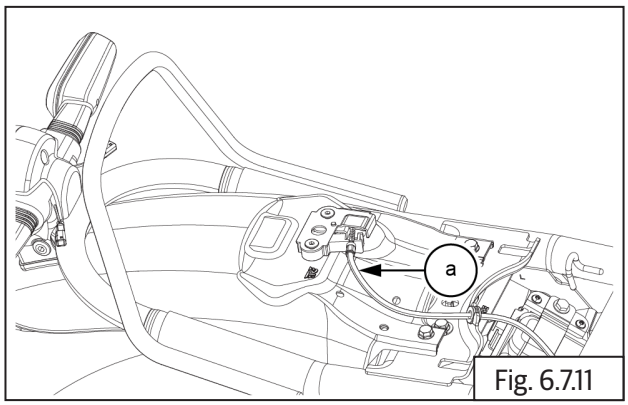

Fig. 6.7.11

6.7.7. Seat

- Insert front locking tab of the seat **(a)** into bracket and frame in the fuel tank.
- Ensure lock pin of center of the seat is aligned to the seat lock and gently press to lock the seat.

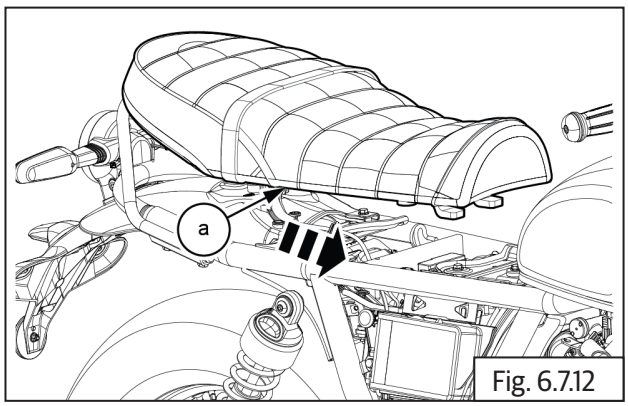

Fig. 6.7.12

6.7.8. Side Panel RH

⚠ CAUTION

DO NOT over tighten bolts and nuts as it may crack or break the plastic parts and cause vibration and noise while driving.

- Install the oval number board **(c)** onto the RH side panel **(b)** and secure it with 4Nos screws **(a)**.

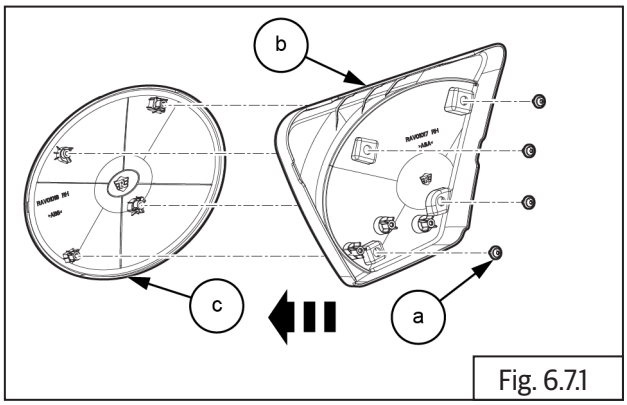

Fig. 6.7.1

	T25 Torx Socket with Ratchet
	1.5 - 2 Nm / 0.15 - 0.2 kgf-m

- Attach the RH side panel bracket **(b)** to the RH side panel using 3 Nos screws **(a)**.

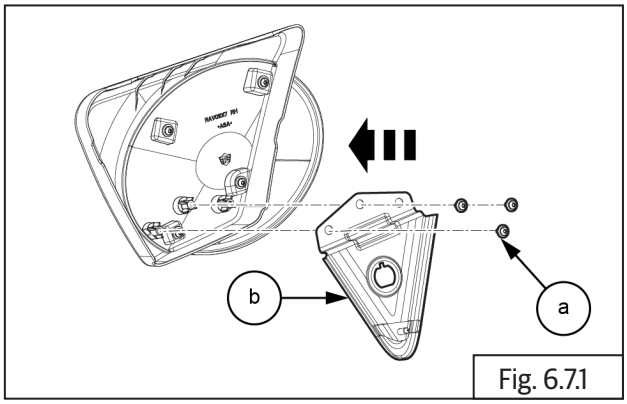

Fig. 6.7.1

	T25 Torx Socket with Ratchet
	1.5 - 2 Nm / 0.15 - 0.2 kgf-m

- Install the side panel lock **(b)** onto the side panel bracket and secure it with the nut **(a)**.

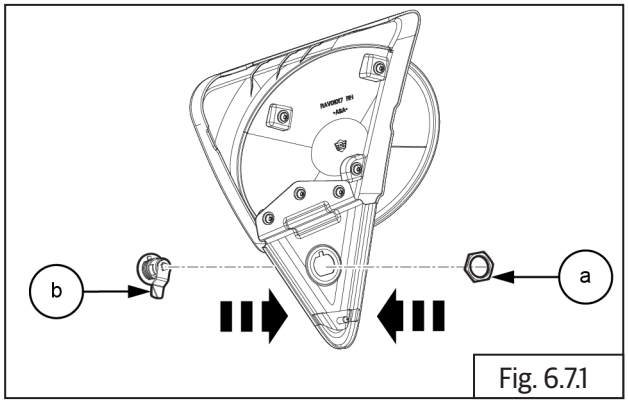

Fig. 6.7.1

	27mm Combination Spanner
	5 Nm / 0.5 kgf-m

- Insert 2Nos grommets **(a)** into the top of the RH side panel.

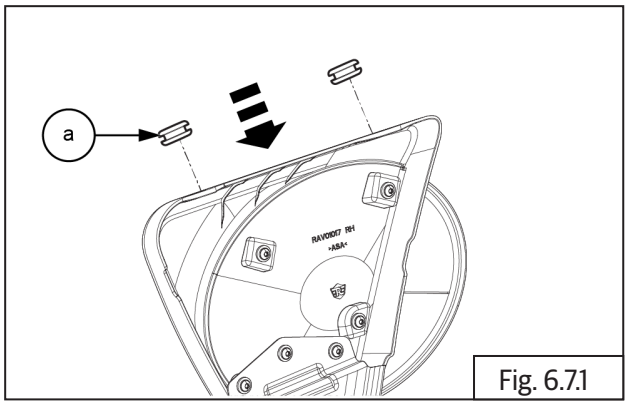

Fig. 6.7.1

- Push the RHS side panel **(a)** back into place.

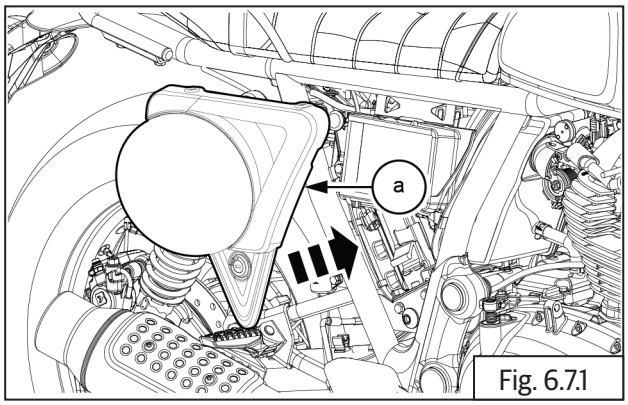

Fig. 6.7.1

- Turn the key **(a)** clockwise to lock.

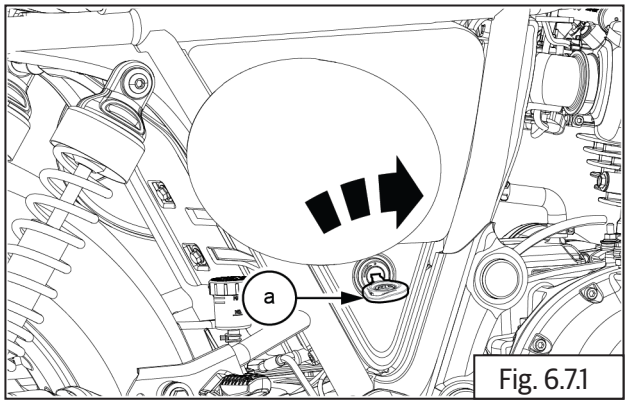

Fig. 6.7.1

WHEELS

CONTENTS **PAGE**

6.8 Wheels 433

Dismantling 433

6.8.1. Front Wheel 433

6.8.2. Front Wheel and Brake Disc 434

6.8.3. Rear Wheel from Swing Arm 436

6.8.4. Rear Wheel and Brake Disc 438

6.8.5. Sprocket Carrier Studs 441

Inspection 442

6.8.6. Front Wheel and Brake Disc 442

6.8.7. Rear Wheel and Brake Disc 444

Assembly 447

6.8.8. Front And Rear Tyre Assembly On Rim 447

6.8.9. Sprocket Carrier Studs 447

6.8.10. Rear Wheel and Brake Disc 448

6.8.11. Rear Wheel into Swing Arm 451

6.8.12. Drive Chain Free Play Adjustment 453

6.8.13. Front Wheel and Front Brake Disc 455

6.8.14. Front Wheel into Front Fork Assembly 457

6.8.15.Troubleshooting 459

6.8 Wheels

Dismantling

6.8.1. Front Wheel

⚠ CAUTION

Ensure the motorcycle is upright on a firm and flat surface.

- Locate a scissor jack **(a)** under the cradle frame and lift motorcycle such that the front wheel is off the ground by minimum 6 inches (or 15 cm).

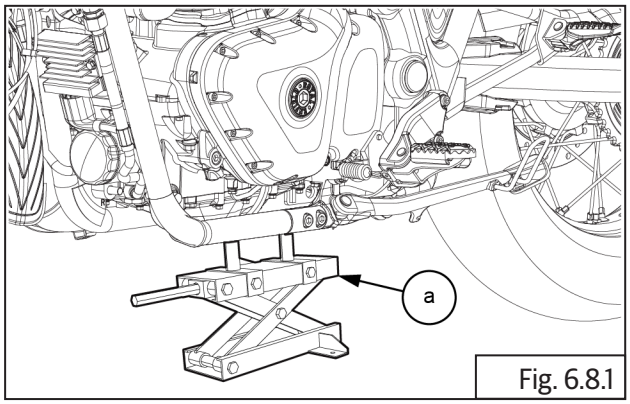

Fig. 6.8.1

- Loosen the cap bolts **2Nos (M8) (a)** from front fork assembly RH.

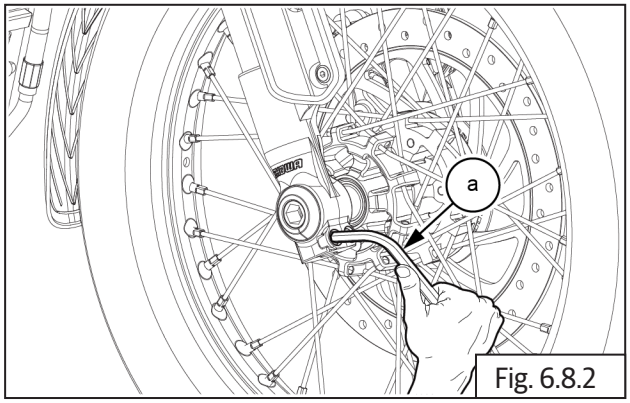

Fig. 6.8.2

	6 mm Allen socket with Ratchet

- Remove the cap bolts **2Nos (M8) (a)** from front fork assembly RH.

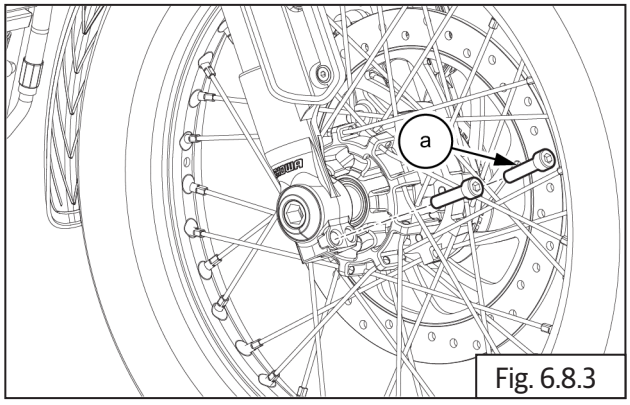

Fig. 6.8.3

- Loosen the spindle bolt **(M18) (a)** from RHS front fork assembly.

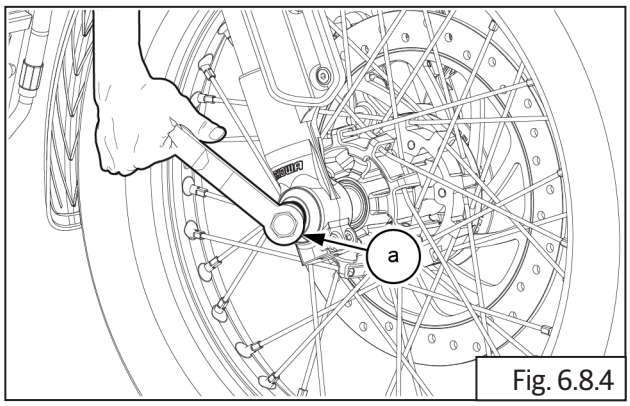

Fig. 6.8.4

	14 mm Front Spindle Adapter

- Gently remove spindle **(a)** from wheel hub and front fork assembly RH.

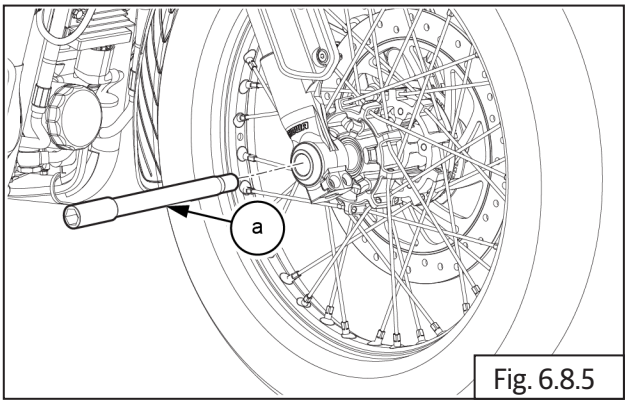

Fig. 6.8.5

⚠ CAUTION

Support wheel from bottom while removing spindle.

⚠ CAUTION

Locate a limiter pad in the middle of the brake pads,It can help prevent the brake caliper from jamming.

- Gently lower the wheel **(a)** such that it comes out of the fork legs.

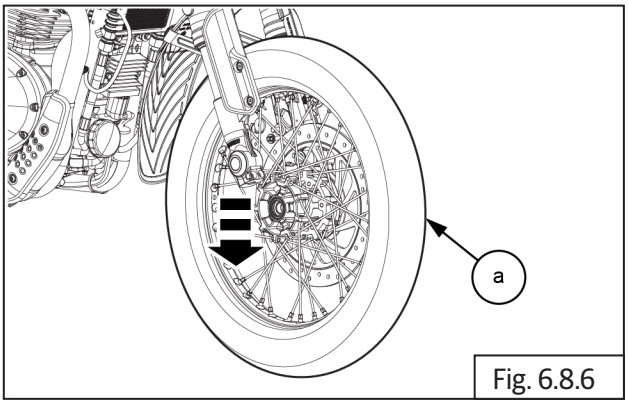

Fig. 6.8.6

- Remove LHS **(b)** and RHS **(a)** spacers from front wheel hub.

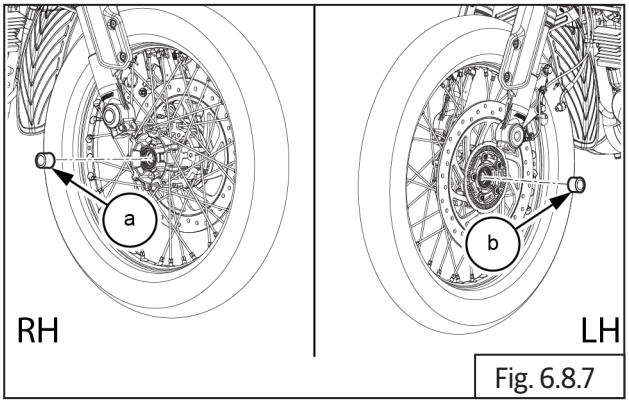

Fig. 6.8.7

6.8.2. Front Wheel and Brake Disc

⚠ WARNING

DO NOT place/store the wheel with disc facing downward. It will damage and change disc warpage.

⚠ CAUTION

Place a soft cloth under the wheel hub center mounting hole area to prevent damage.

- Loosen and remove **5 Nos** Hex socket head bolts **(M8) (a)** holding disc plate to hub, in crisscross pattern.

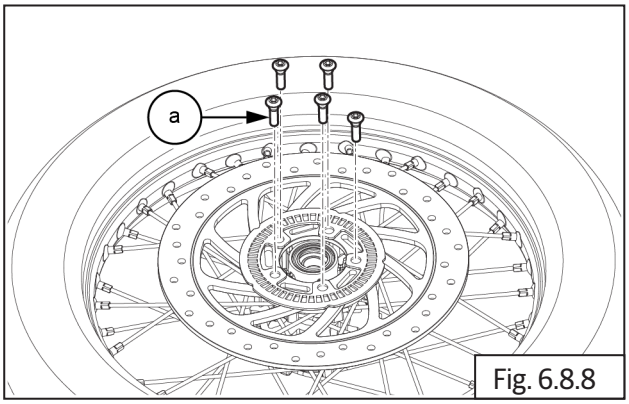

Fig. 6.8.8

	6 mm Allen socket with Ratchet

- Remove toner wheel front **(a)** from hub and store carefully.

⚠ CAUTION

Avoid any bends or damages to the toner wheel as it will affect the functioning of ABS.

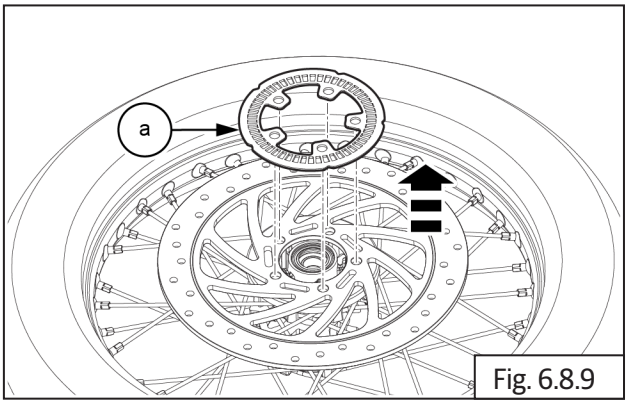

Fig. 6.8.9

- Remove front brake disc **(a)** from hub and store carefully.

⚠ CAUTION

Ensure the brake disc does not get damaged as it will affect the brake efficiency.

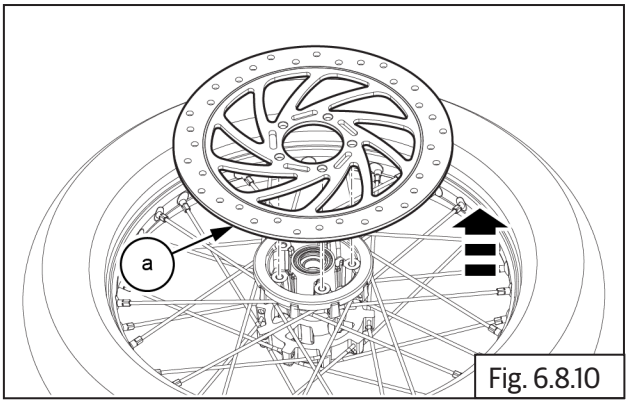

Fig. 6.8.10

- Gently remove damper rubber **(a)** from the hub.

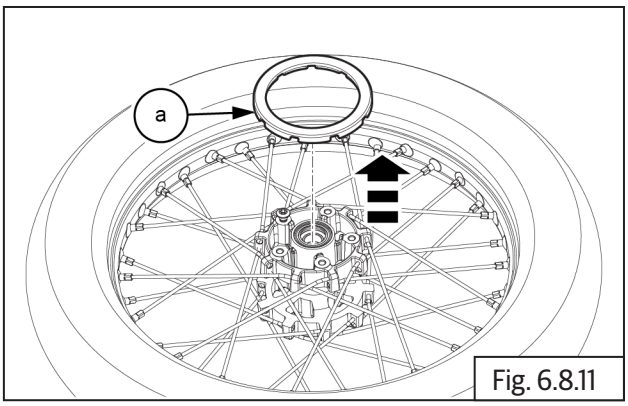

Fig. 6.8.11

- Remove grease seal **(a)** from LHS and RHS wheel hub.

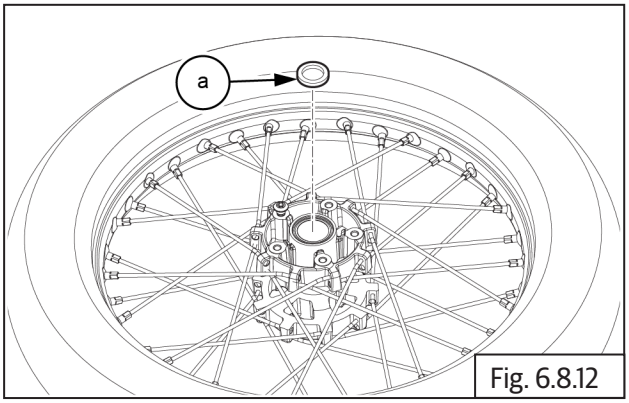

Fig. 6.8.12

	Screw driver

- Locate a suitable pointed punch on hole in spacer from RH of hub to remove bearing LH **(a)**.

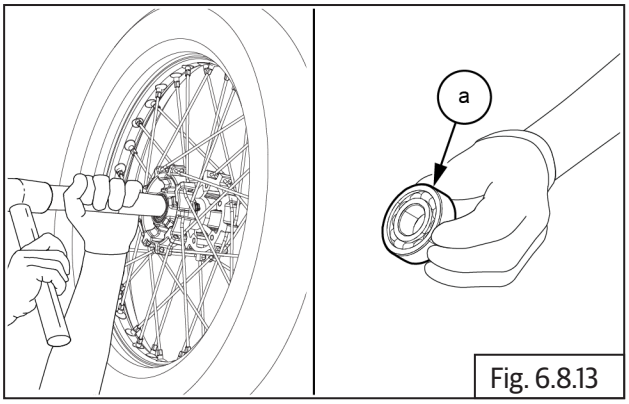

Fig. 6.8.13

	Punch and Mallet

- Remove the internal spacer **(a)** from wheel hub.

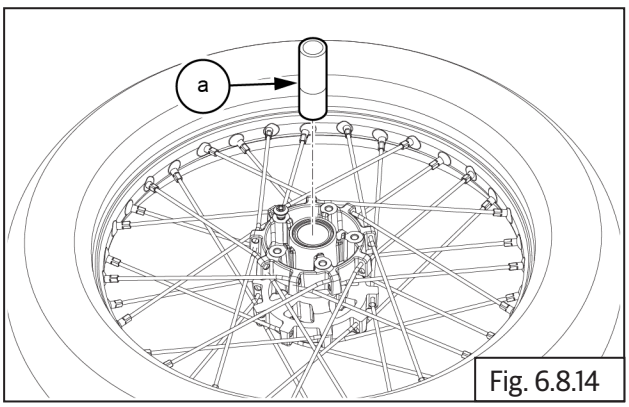

Fig. 6.8.14

- Insert a punch into hub from LH side and drive out bearing RH **(a)**.

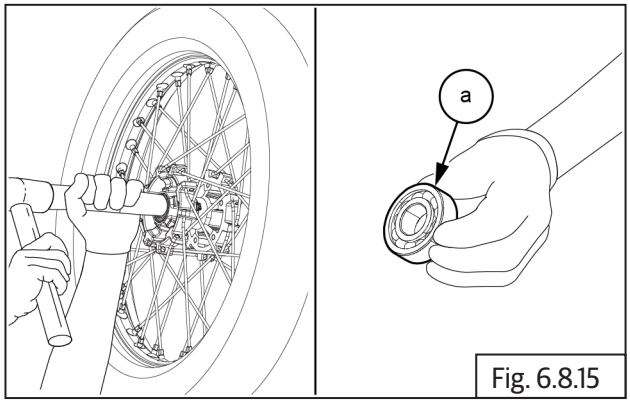

Fig. 6.8.15

	Punch and Mallet

6.8.3. Rear Wheel from Swing Arm

⚠ CAUTION

Ensure the motorcycle is upright on a firm and flat surface.

- Locate a scissor jack **(a)** under the cradle frame and lift motorcycle such that the rear wheel is off the ground.

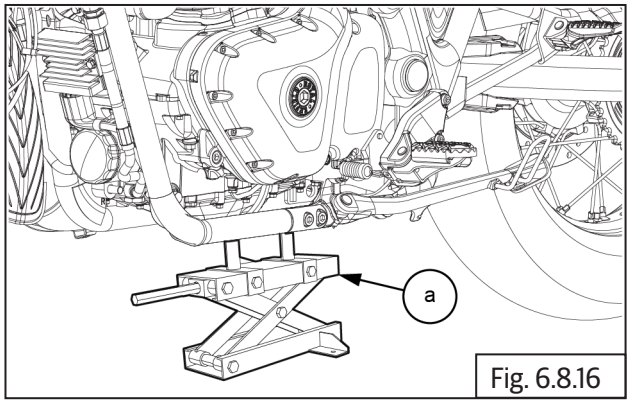

Fig. 6.8.16

- Before remove the rear wheel, observe the alignment index marks on both left **(a)** and right**(b)** chain adjusters.

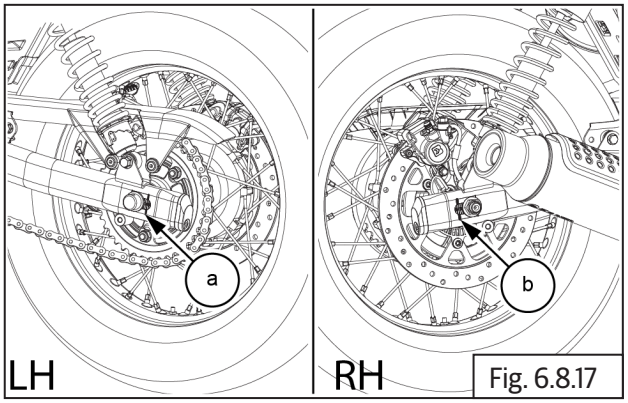

Fig. 6.8.17

- Loosen and remove Hex axle nut **(M16) (b)** from RH and hold other side LH with tommy bar **(a)**.

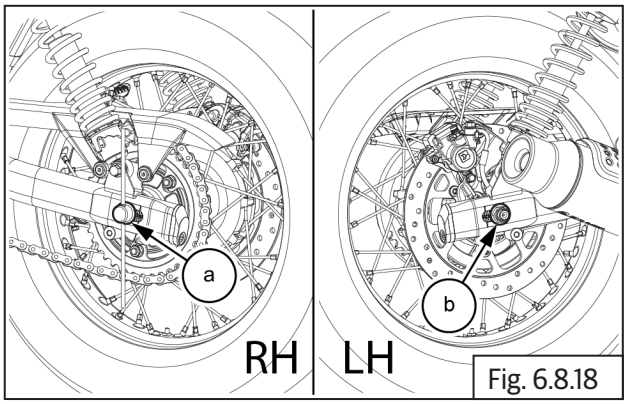

Fig. 6.8.18

	24 mm Ring spanner and Tommy bar

- Loosen the adjuster cap bolts **(M8) (a)** and **(b)** on both LH and RH swing arm.

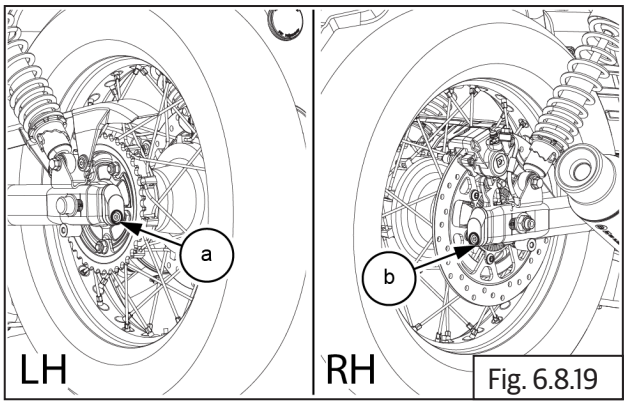

Fig. 6.8.19

	6 mm Allen socket with Ratchet

- Remove the hex U nut **(M16) (a)** from RHS spindle.

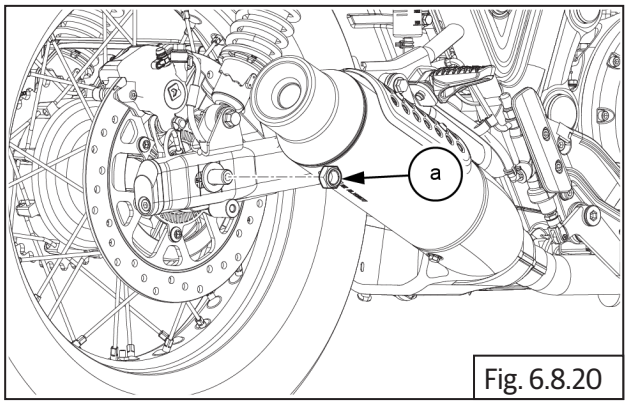

Fig. 6.8.20

	24 mm Ring spanner and Tommy bar

- Remove washer **(a)** from spindle on swing arm RH.

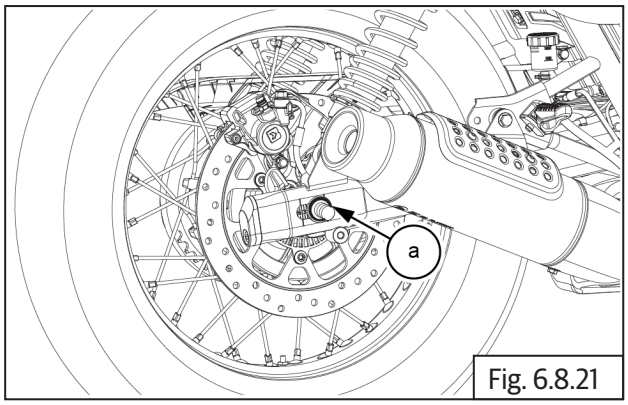

Fig. 6.8.21

- Gently tap spindle **(a)** from RH to pull out from LHS.
- Remove spindle **(a)** from swing arm LH along with washer **(b)**.

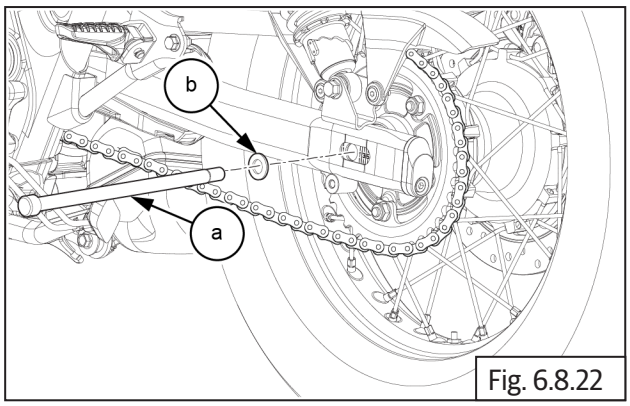

Fig. 6.8.22

	Mallet & Tommy bar

- Push rear wheel forward to increase chain slack on rear sprocket.

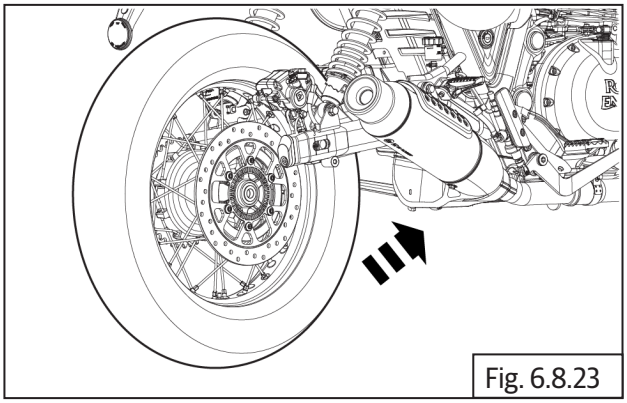
Fig. 6.8.23

- Remove chain adjuster assembly **(a)** cap **(b)** with cap bolt **(d)** and washer **(c)** from swing arm LHS .
- Proceed the same step to RHS side.

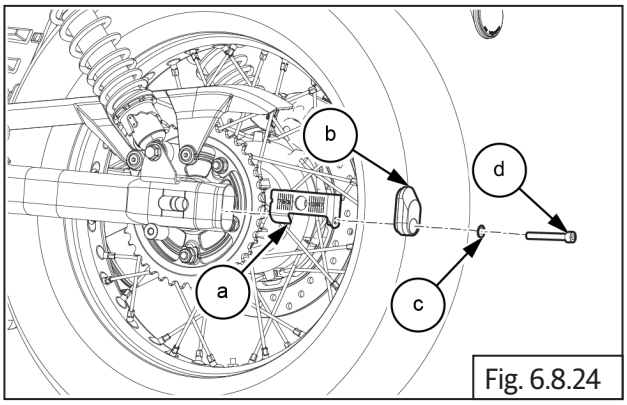

Fig. 6.8.24

⚠ CAUTION

Locate a limiter pad in the middle of the brake pads,It can help prevent the brake caliper from jamming.

- Gently release drive chain **(a)** from sprocket .

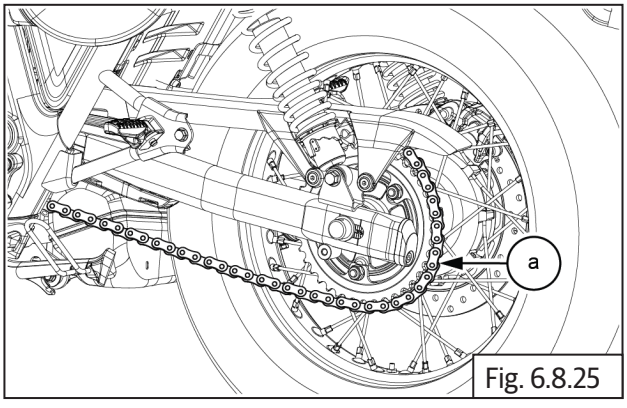

Fig. 6.8.25

- Gently remove spacer LH **(a)** and RH **(b)** from the rear wheel hub.

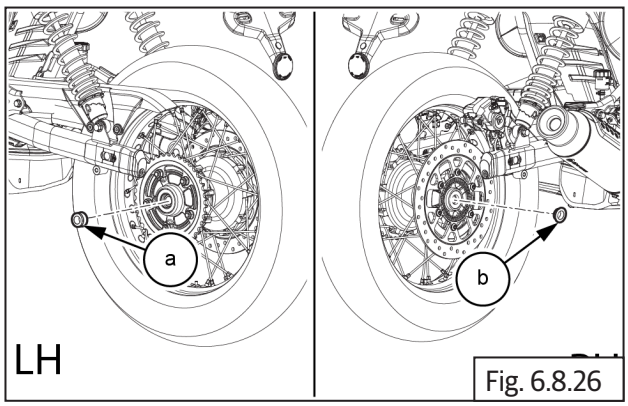

Fig. 6.8.26

- Gently remove rear wheel from swing arm.

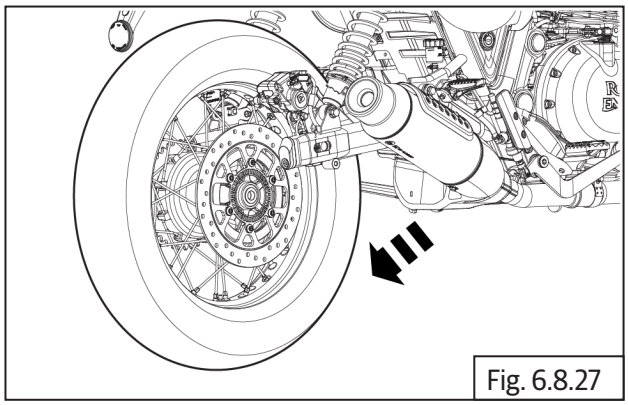
Fig. 6.8.27

6.8.4. Rear Wheel and Brake Disc

- Loosen and remove **5Nos** nut **(M10) (a)** to remove chain sprocket .

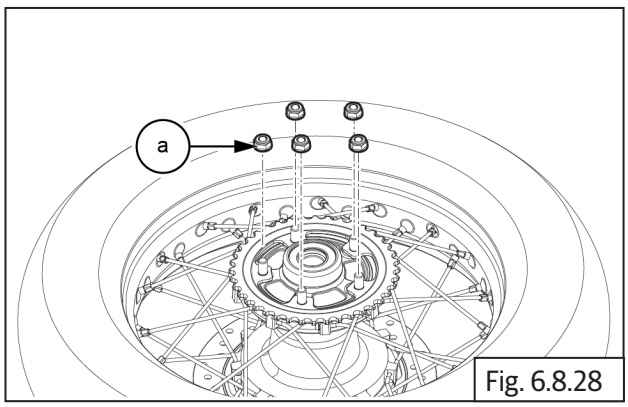

Fig. 6.8.28

	17 mm socket with Ratchet

- Remove chain drive sprocket **(a)** from sprocket carrier.

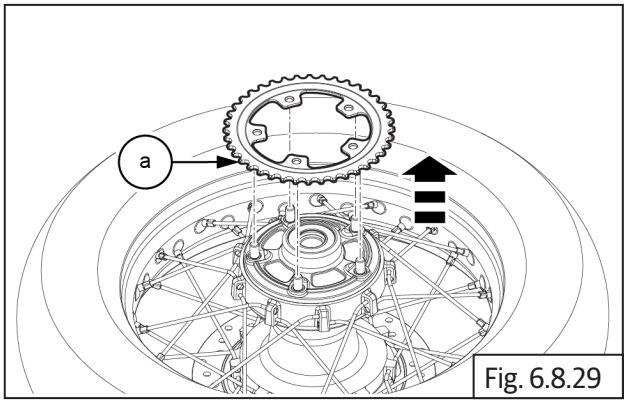

Fig. 6.8.29

- Remove sprocket carrier **(a)** from the rear wheel hub.

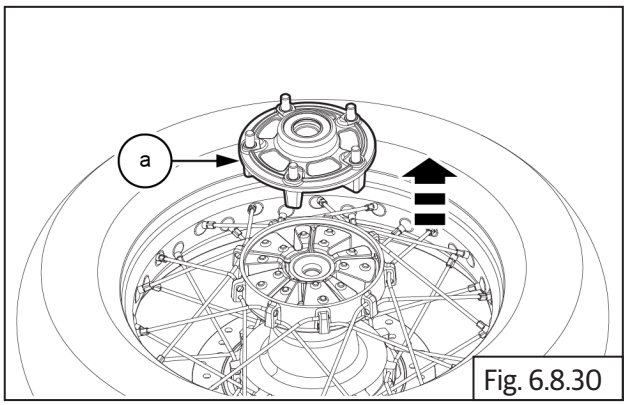

Fig. 6.8.30

- Remove cush rubber **(a)** from rear wheel hub LH.

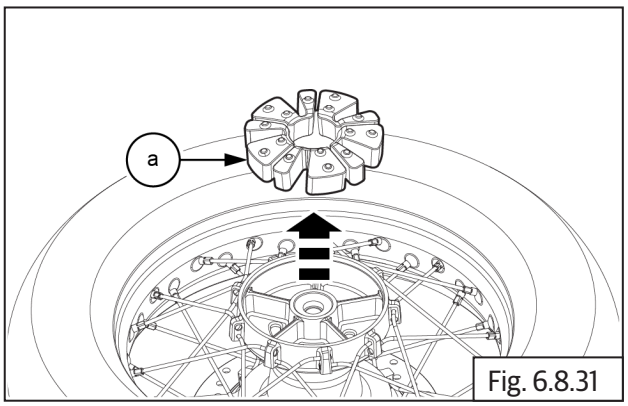

Fig. 6.8.31

	Minus screwdriver

- Gently tap to remove cush spacer **(a)** from sprocket carrier.

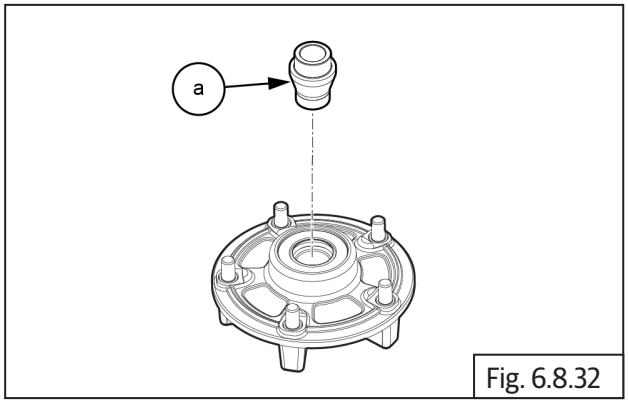

Fig. 6.8.32

	Punch and Mallet

⚠ CAUTION

DO NOT apply excessive force to remove the bearings, spacers as it may cause damages.

- Gently remove grease seal **(a)** from the sprocket carrier .

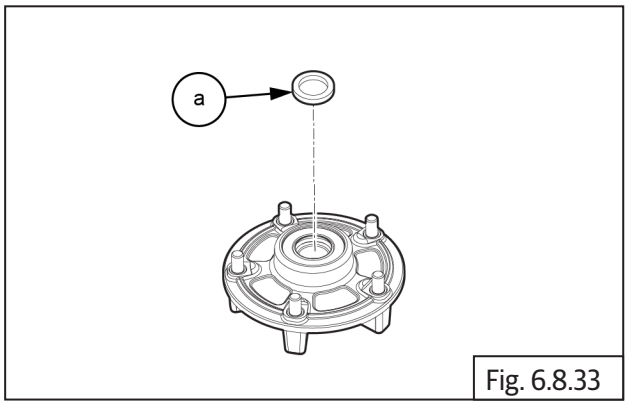

Fig. 6.8.33

	Minus screwdriver

- Gently remove bearing **(a)** from the sprocket carrier.

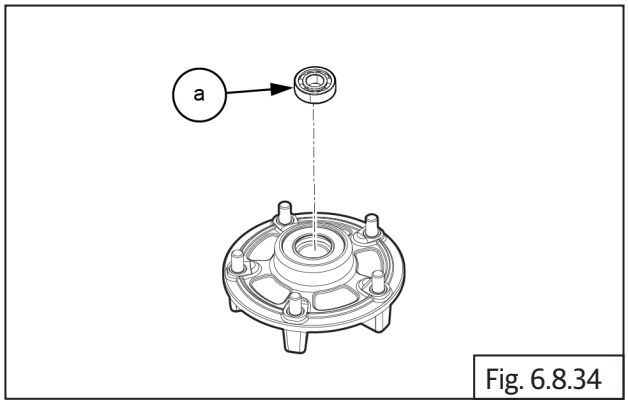

Fig. 6.8.34

	Punch and Mallet

- Loosen and remove **6 Nos** Hex head button socket screws **(M8) (a)** to remove ABS toner.

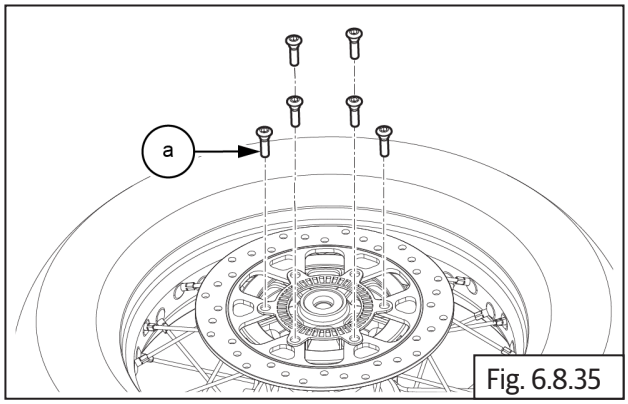

Fig. 6.8.35

	6 mm Allen socket with Ratchet

- Remove ABS toner wheel **(a)** from rear wheel RH.

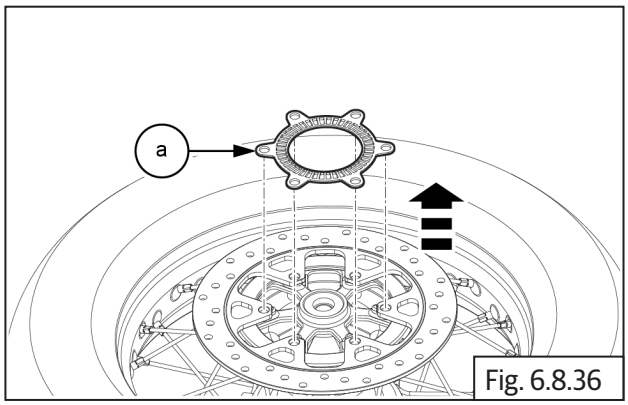

Fig. 6.8.36

- Remove rear brake disc **(a)** from the rear wheel hub .

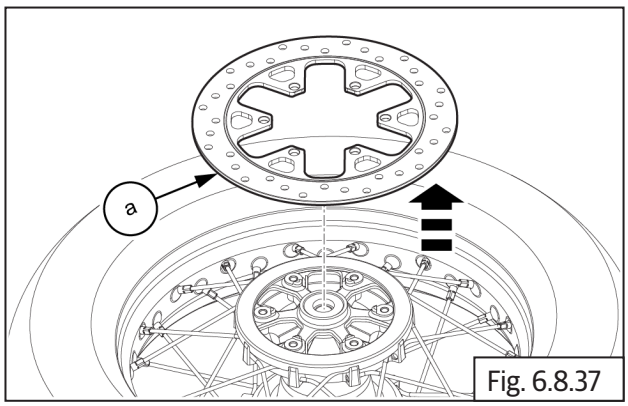

Fig. 6.8.37

- Gently remove damper rubber **(a)** from rear wheel hub.

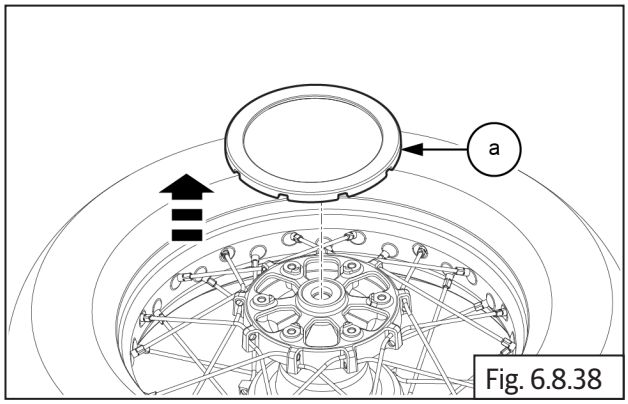

Fig. 6.8.38

- Remove grease seal **(a)** from RHS hub.

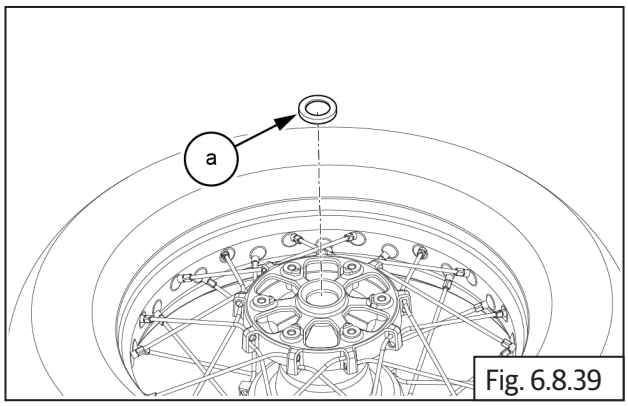

Fig. 6.8.39

	Minus screwdriver

- Gently remove grease seal **(a)** from the sprocket carrier.

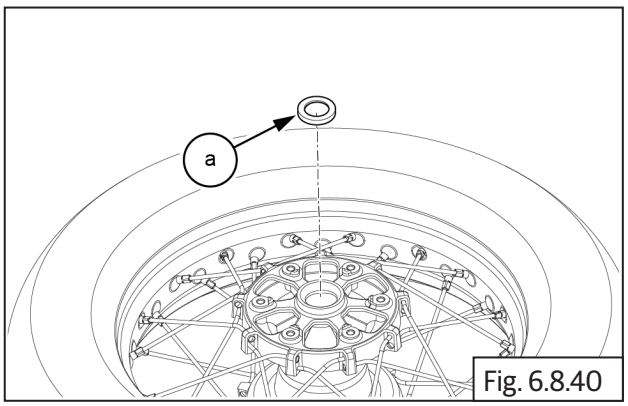

Fig. 6.8.40

	Minus screwdriver

- Insert a punch into hub from LH side and drive out bearing RH **(a)**.

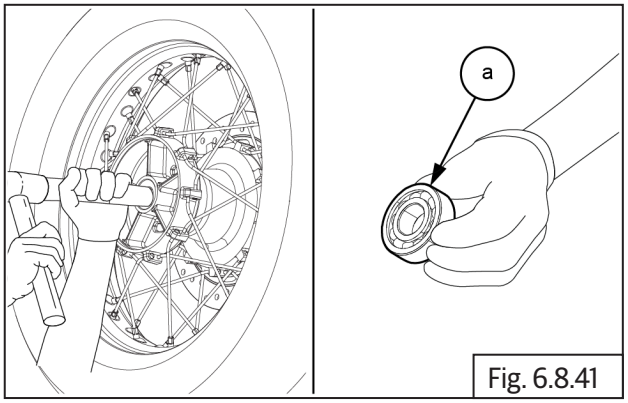

Fig. 6.8.41

	Punch and Mallet

- Remove spacer **(a)** from the rear wheel hub RH.

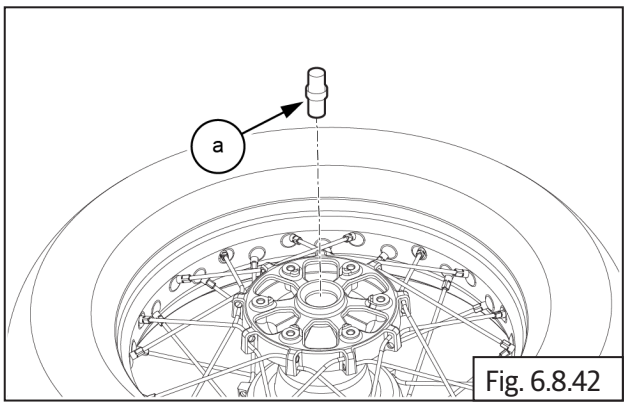

Fig. 6.8.42

- Locate a suitable pointed punch on hole in spacer from RH of hub to remove bearing LH **(a)**.

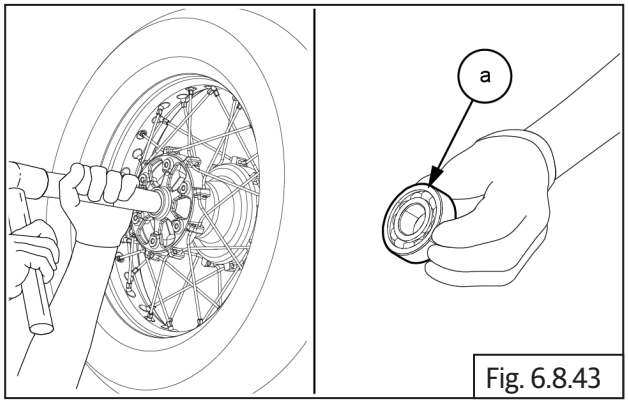

Fig. 6.8.43

	Punch and Mallet

⚠ CAUTION

DO NOT apply excessive force to remove the bearing, spacer as it may cause damage.

6.8.5. Sprocket Carrier Studs

- Locate the **2Nos** nuts **(M10) (a)** on the Sprocket Carrier stud.

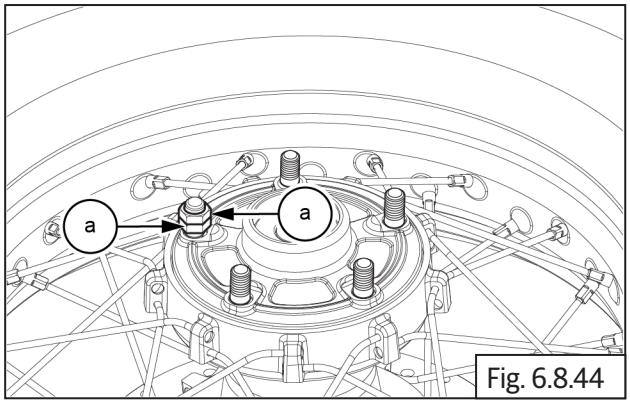

Fig. 6.8.44

	17 mm Combination Spanner

- Hold the bottom nut **(a)** and tighten the top nut **(b)**.

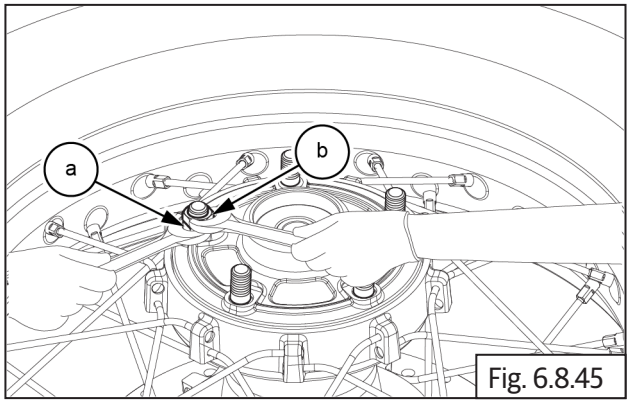

Fig. 6.8.45

	17 mm Combination Spanner

- Loosen the bottom nut **(a)** until the stud is fully removed from the hub.

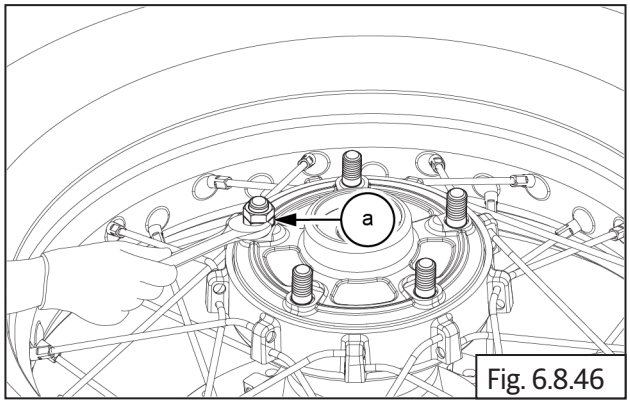

Fig. 6.8.46

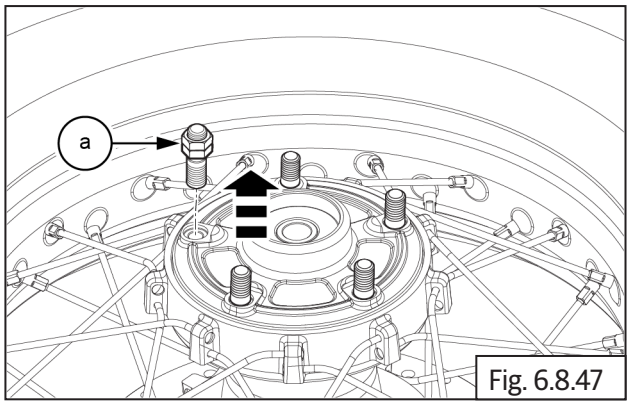

Fig. 6.8.47

- Loosen and remove the **2Nos** nuts **(a)** from the stud.

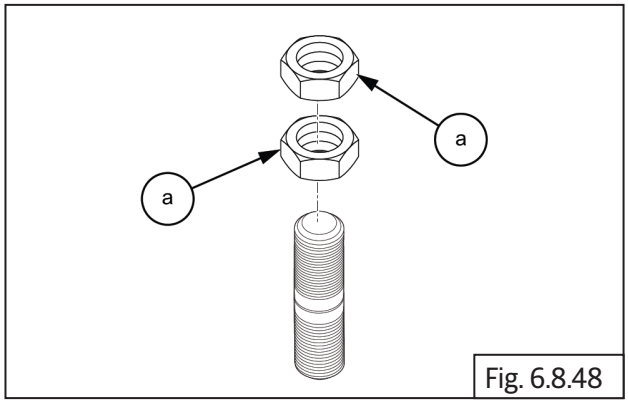

Fig. 6.8.48

- Repeat the same steps to remaining studs.

Inspection

6.8.6. Front Wheel and Brake Disc

- Remove the tyre from wheel rim.
- Inspect tyre condition and wheel rim for any damages or bends and replace if out of specifications.

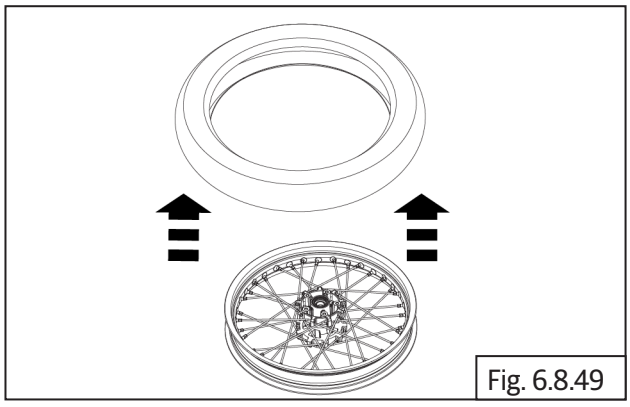
Fig. 6.8.49

- Inspect and replace spindle if it has excess wear, rust or bends.

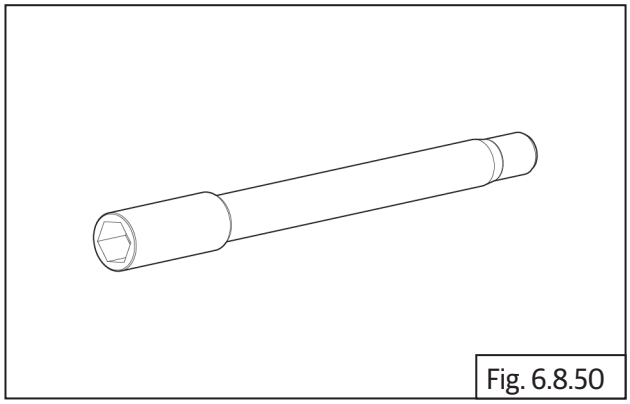
Fig. 6.8.50

- Check tyres for any uneven wear out and the sipes on the center of the tyre is above the TWI index.

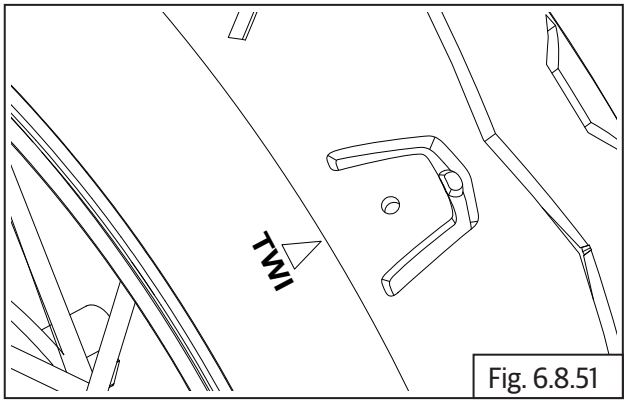

Fig. 6.8.51

	Tyre depth gauge

- Check noise and play on bearing LH and RH.

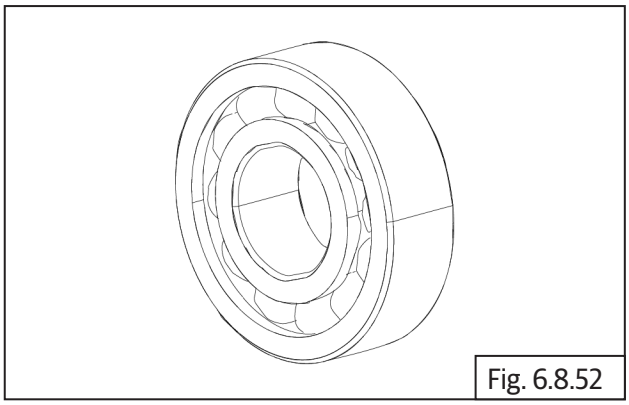
Fig. 6.8.52

- Check and replace wheel spacer if it has excess wear-out.

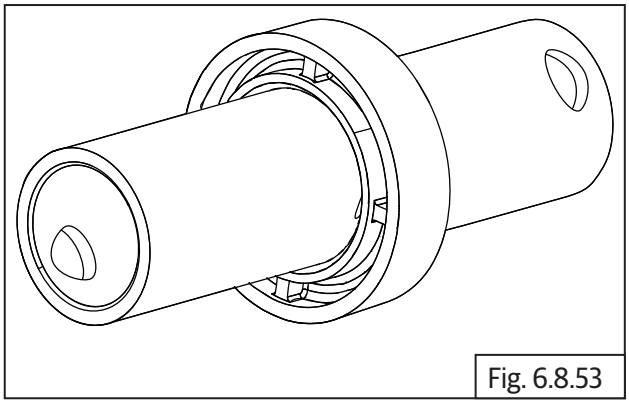
Fig. 6.8.53

- Check if wheel hub assembly is cracked or damaged and replace.
- Check and replace wheel hub bearing seated portion if there is any scoring.

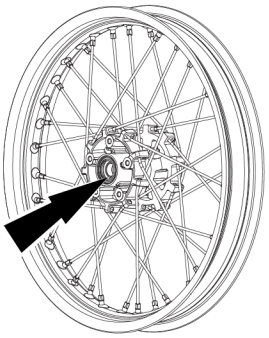

Fig. 6.8.54

- Inspect wheel rim run out / face out and replace if out of specifications.

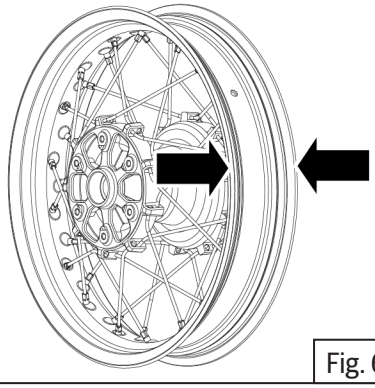

Fig. 6.8.55

Service limit:	± 1.5 mm

- Inspect for rust, deep scoring, any foreign materials, burn marks crack in the mounting location of brake disc.
- Inspect brake disc thickness and run-out. Measure depth at points where scoring is found on the discs and replace if there is excess wear.
- Also measure thickness at the points indicated in the illustration and replace disc if out of specifications.

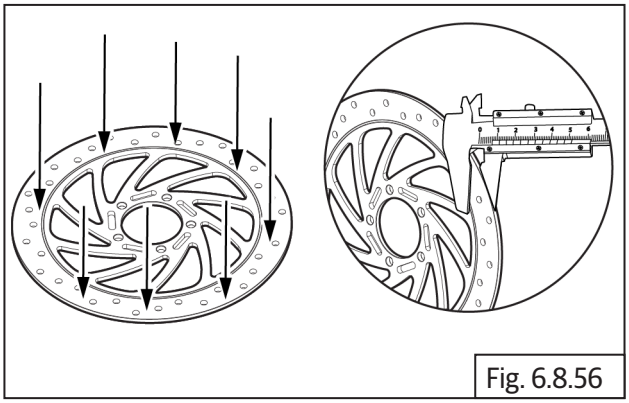

Fig. 6.8.56

	Vernier caliper

Service limit:	0.8 mm

- Place brake disc rotor on a flat surface and inspect warpage. Replace if it is out of specifications.

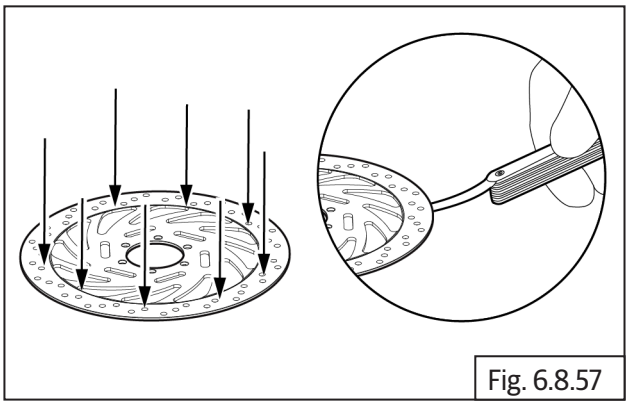

Fig. 6.8.57

	Feeler gauge

Standard:	0.00mm
Service limit:	0.10mm

- Inspect and replace toner wheel plate if there are any damages or bends.

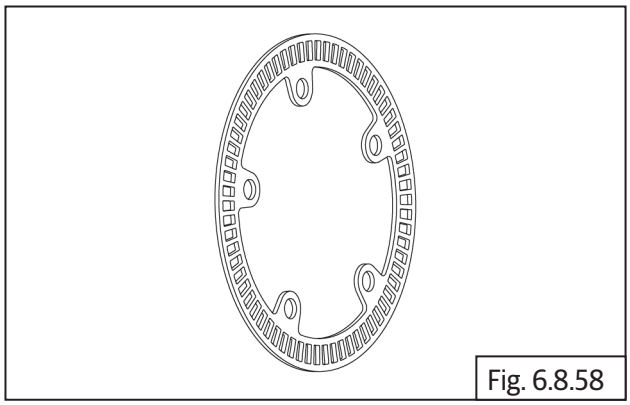

Fig. 6.8.58

- After assembly of brake disc **(a)** into front wheel, insert spindle into rim, fix on wheel balance frame **(c)** and rotate rim to check the disc run-out with dial gauge **(b)**. Ensure run-out is within specified service limits.

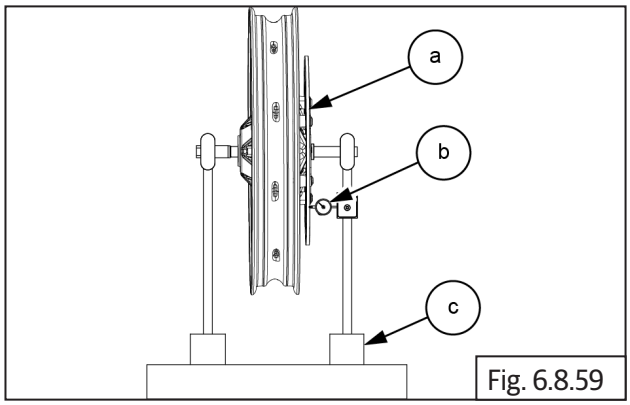

Fig. 6.8.59

	Dial gauge

Service limit:	± 1.5 mm

NOTE
• *Run-out of brake disc should be checked only when brake disc is assembled on wheel hub.*

6.8.7. Rear Wheel and Brake Disc

- Inspect tyre condition and wheel rim for any damages or bends and replace if doesn't meet the specifications.

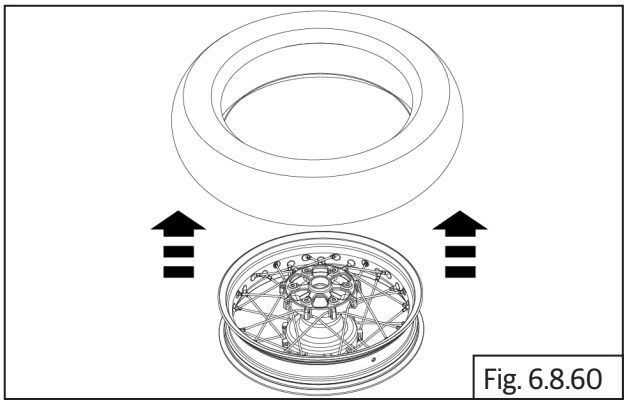

Fig. 6.8.60

- Inspect and replace spindle **(a)** if it has excess wear, rust or bends.

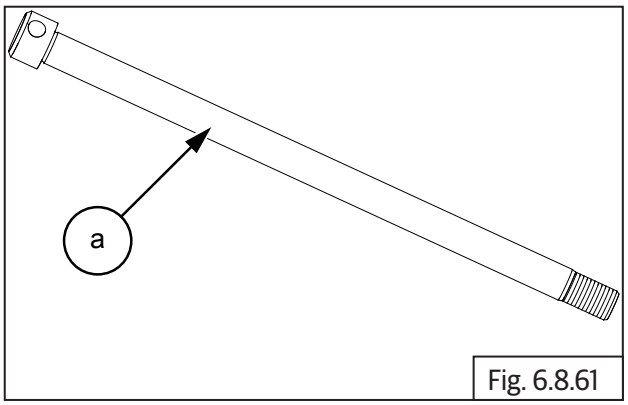

Fig. 6.8.61

- Check noise and play on bearing LH and RH. Replace if necessary.

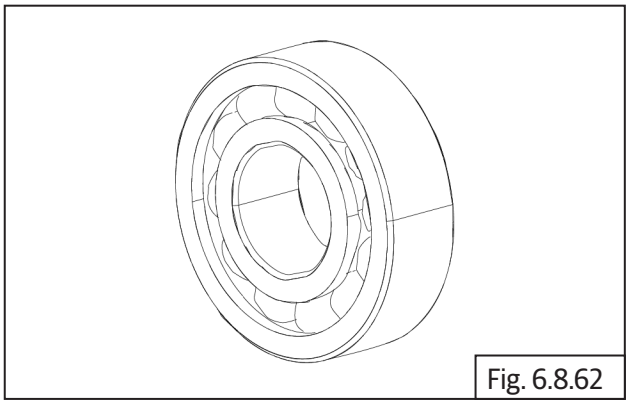

Fig. 6.8.62

- Check and replace spacer if it has excess wear-out.

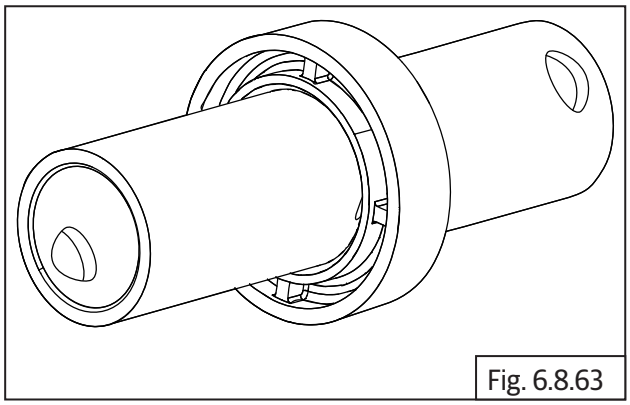

Fig. 6.8.63

- Inspect ABS toner wheel for any bends or damages.
- Place ABS toner wheel on a flat surface and check warpage. Replace if out of specifications.

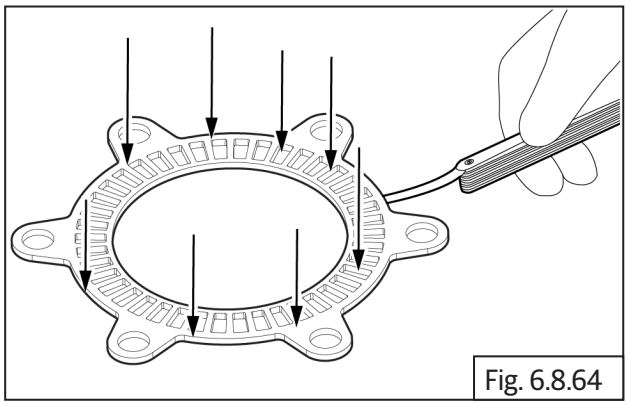

Fig. 6.8.64

	Feeler gauge

Standard:	0.00 mm
Service limit:	0.10 mm

- Inspect for rust, deep scoring, any foreign materials, burn marks crack in the mounting location of brake disc.
- Inspect brake disc thickness and run-out. Measure depth at points where scoring is found on the discs and replace if there is excess wear.
- Also measure thickness at the points indicated in the illustration and replace disc if out of specifications.

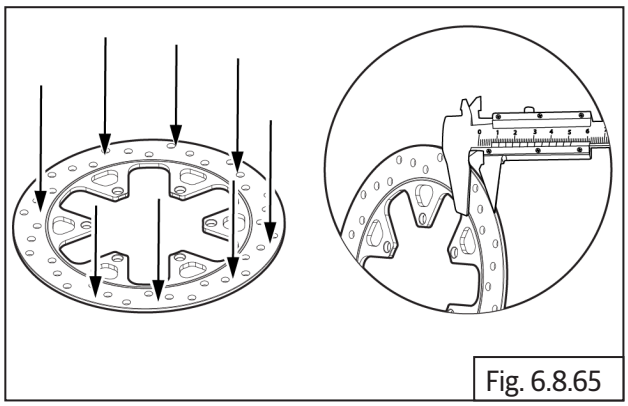

Fig. 6.8.65

	Vernier caliper

Service limit:	0.8 mm

- Place brake disc rear on a flat surface and check warpage. Replace if out of specifications.

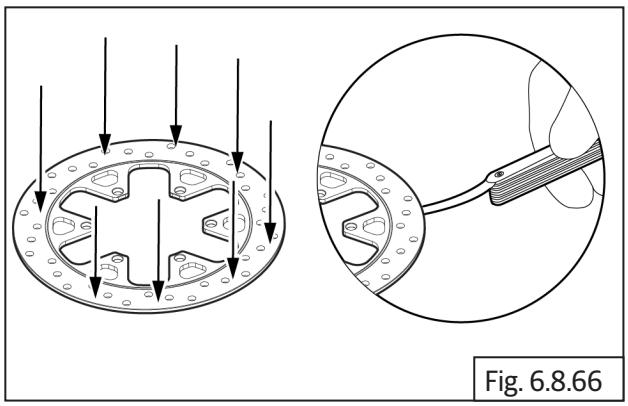

Fig. 6.8.66

	Feeler gauge

Standard:	0.00 mm
Service limit:	0.10 mm

- Inspect wheel hub assembly for any cracks or damages. Replace if out of specifications.
- Inspect if hub bearing seating portion has scoring. Replace if out of specifications.

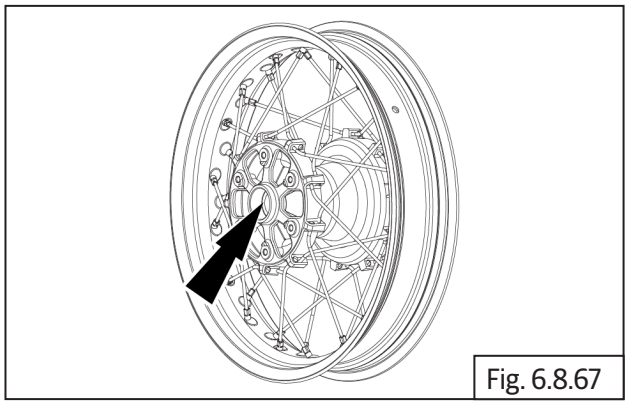

Fig. 6.8.67

- After assembly of brake disc **(a)** into front wheel, insert spindle into rim, fix on wheel balance frame **(c)** and rotate rim to check the disc run-out with dial gauge **(b)**. Ensure run-out is within specified limits.

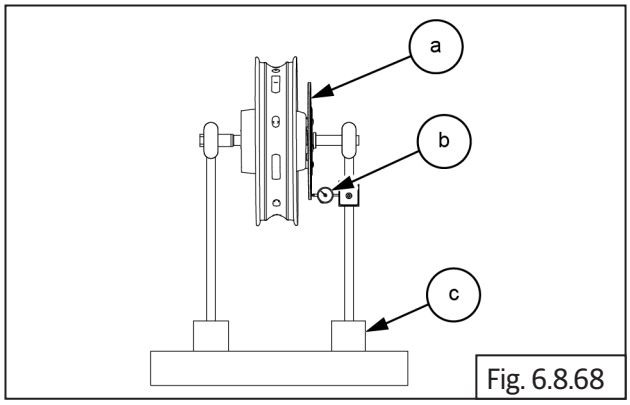

Fig. 6.8.68

	Dial gauge

Service limit:	± 1.5 mm

⚠ CAUTION

Run-out of brake disc should be checked only when brake disc is assembled on wheel hub.

- Inspect condition of wheel spokes and wheel rim for any damages or bends and loose ends. Replace if necessary.

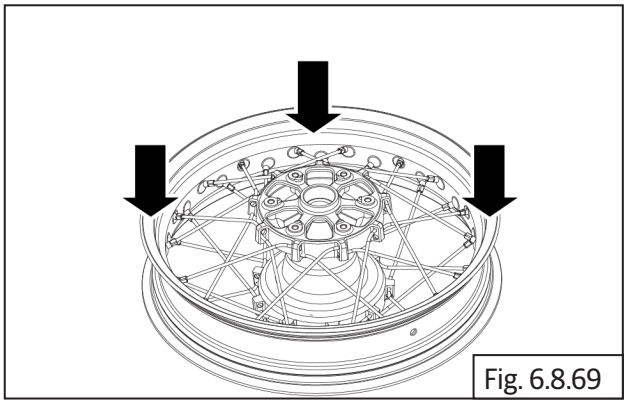

Fig. 6.8.69

- Check rear wheel hub cushion rubbers for any wear-out or damages.

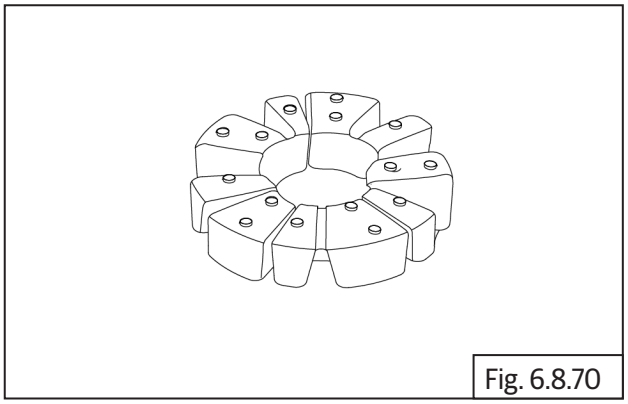

Fig. 6.8.70

- Check tyres for any uneven wear out and the sipes on the center of the tyre is above the TWI index.

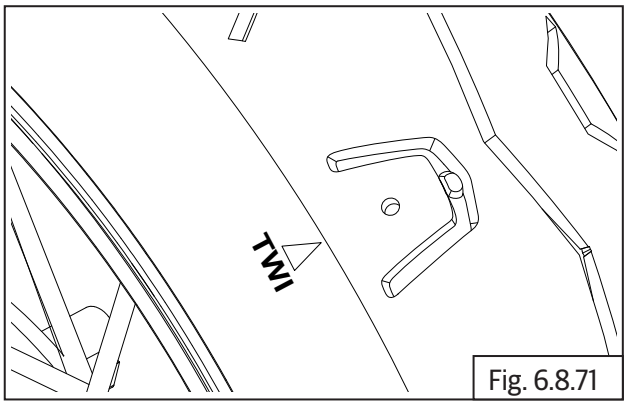

Fig. 6.8.71

	Tyre depth gauge

Assembly

6.8.8. Front And Rear Tyre Assembly On Rim

- Ensure the tyre is assembled on the wheel rim with the arrow on the tyre side wall is facing towards the front.
- Inflate tyre to the recommended pressure and ensure the tyre is evenly seated in the rim on both LH and RH sides.

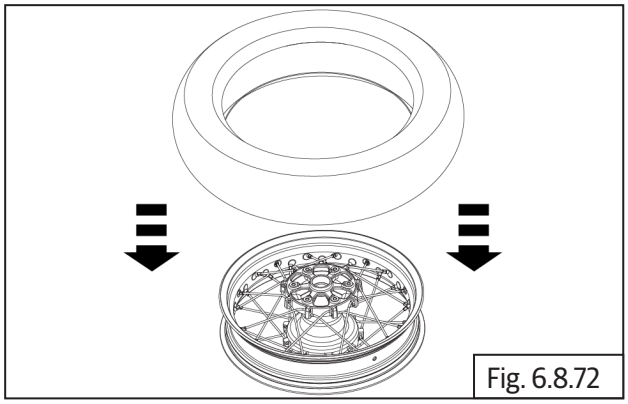

Fig. 6.8.72

6.8.9. Sprocket Carrier Studs

NOTE
• *Clean the stud thread seating areas before install the stud..*

- Locate the **2Nos** nuts **(M10) (a)** on the stud.

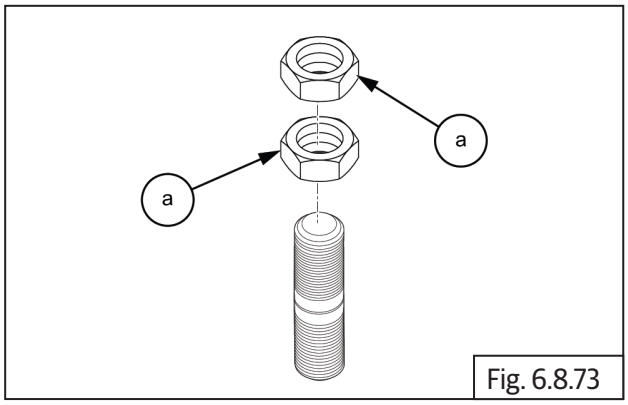

Fig. 6.8.73

	17 mm Combination Spanner

- Hold the bottom nut **(a)** and tighten the top nut **(b)**.

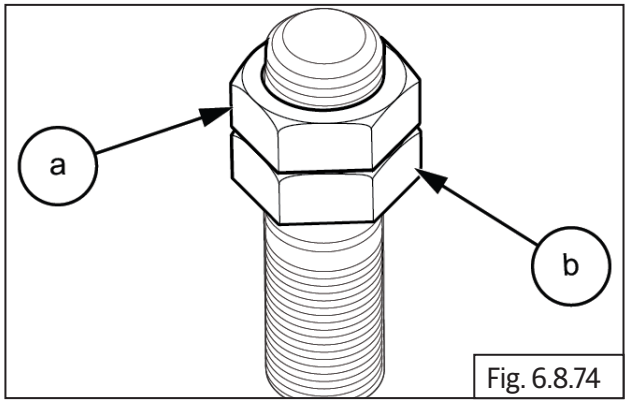

Fig. 6.8.74

	17 mm Combination Spanner

NOTE
• *Clean the stud thread seating areas before installing the stud.*

- Apply the Loctite on the stud thread.

	Loctite 204

- Locate and install the stud with nut **(a)** into sprocket carrier, until the stud is fully seated on the hub.

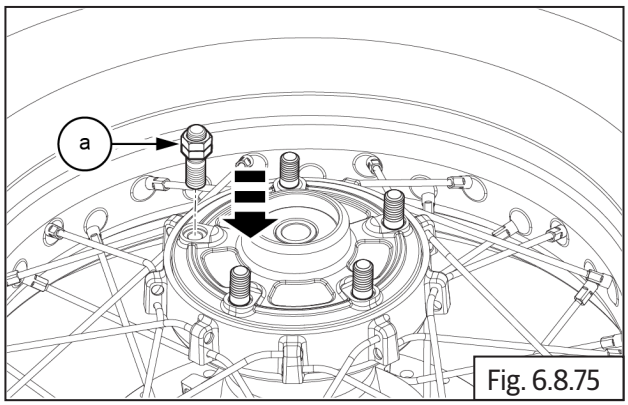

Fig. 6.8.75

- Tighten the top nut **(a)** to the recommended torque specification.

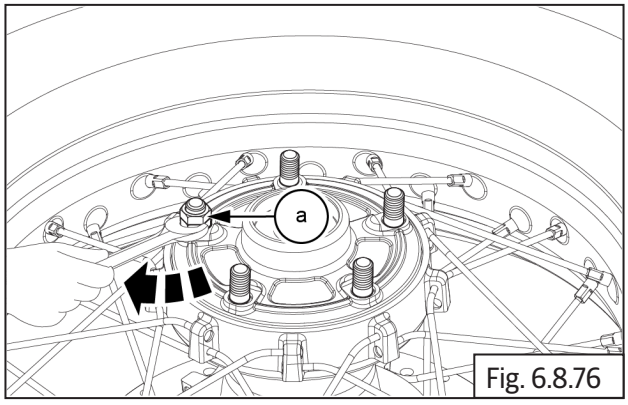

Fig. 6.8.76

	17 mm socket with Ratchet
	31 - 36 Nm / 3.1 - 3.6 kgf-m

- Hold the bottom nut **(a)** and loosen the top nut **(b)**.

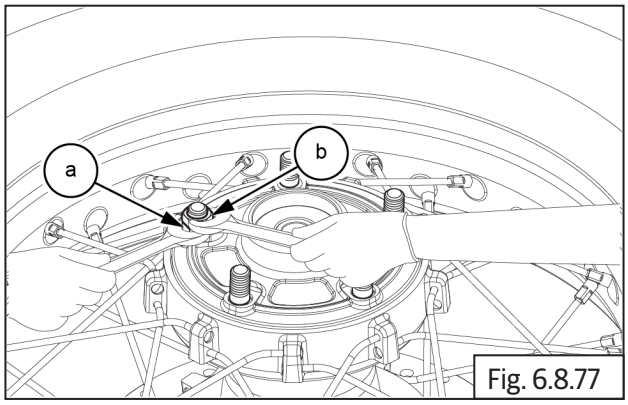

Fig. 6.8.77

- Repeat the same steps to remaining studs.

6.8.10. Rear Wheel and Brake Disc

NOTE
• When installing the rear wheel bearing, first insert the bearing into the wheel hub RH (disc side).

- Locate bearing RH **(a)** into rear wheel hub RH. Gently tap on the bearing and ensure it is seated properly on the hub.

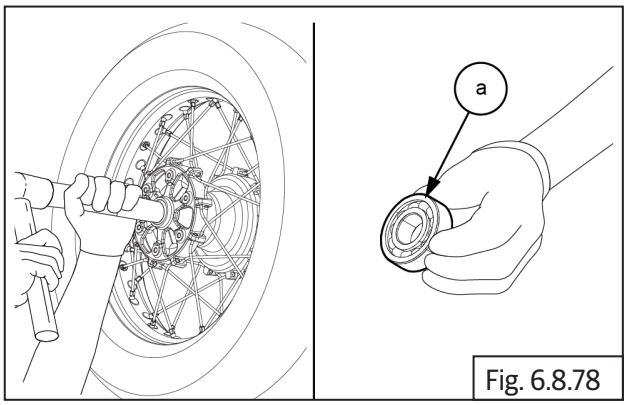

Fig. 6.8.78

- Assemble spacer **(a)** into rear wheel hub RH. Ensure it is properly seated on the bearing surface.

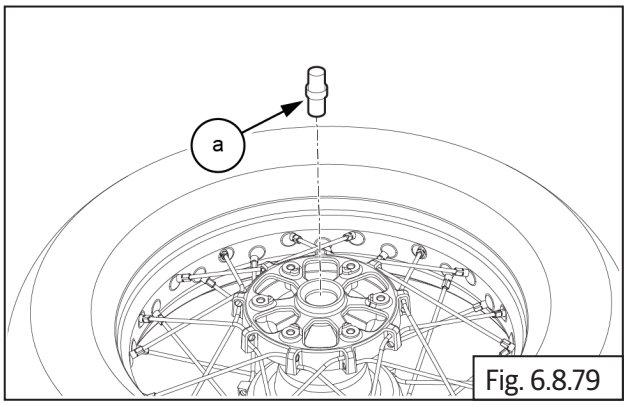

Fig. 6.8.79

- Locate bearing LH **(a)** into rear wheel hub LH. Gently tap on the bearing and ensure it is seated properly on the hub.

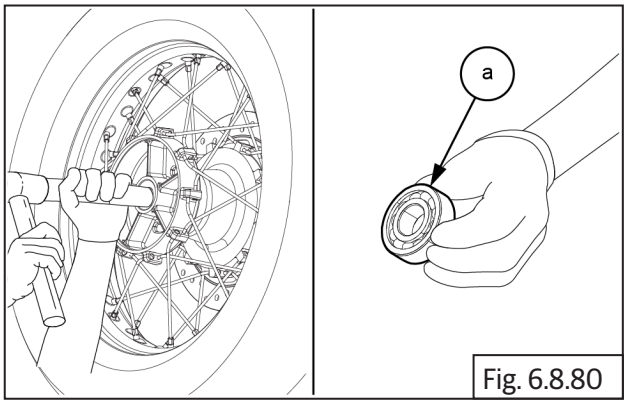

Fig. 6.8.80

	Punch and Mallet

- Apply **0.3 grams** of grease on seal to inner and outer diameter surface.
- Assemble grease seal **(a)** into rear wheel hub.

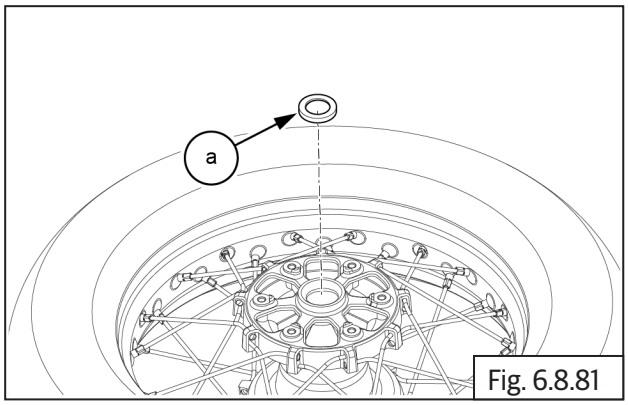

Fig. 6.8.81

	NLGI 2 / Mobil XHP 222

	Seal installer

- Apply **0.3 grams** of grease on seal to inner and outer diameter surface.
- Assemble grease seal **(a)** into rear wheel hub.

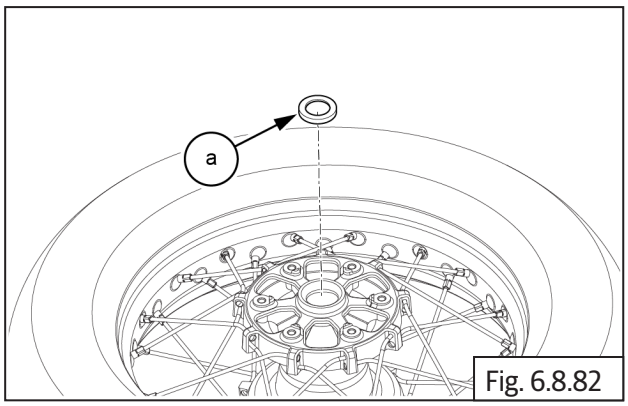

Fig. 6.8.82

	NLGI 2 / Mobil XHP 222

	Seal installer

- Install the damper rubber **(a)** on rear wheel hub.

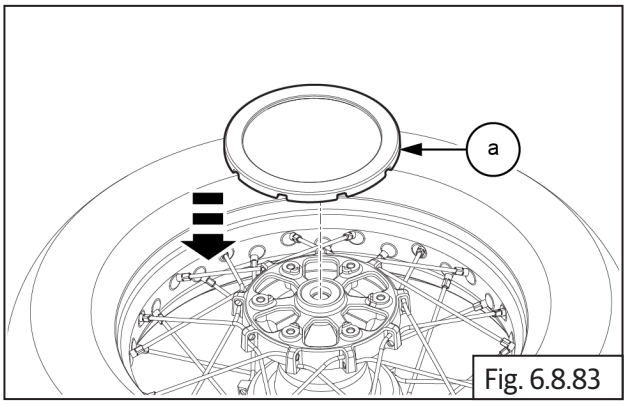

Fig. 6.8.83

- Assemble rear brake disc **(a)** into rear wheel hub RH.

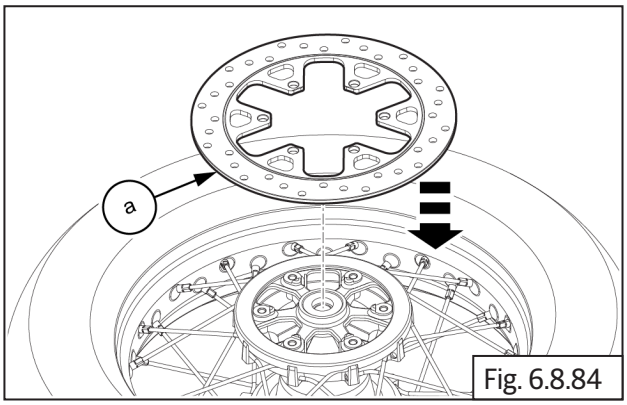

Fig. 6.8.84

- Assemble ABS toner wheel **(a)** into rear brake disc on rear wheel RH.

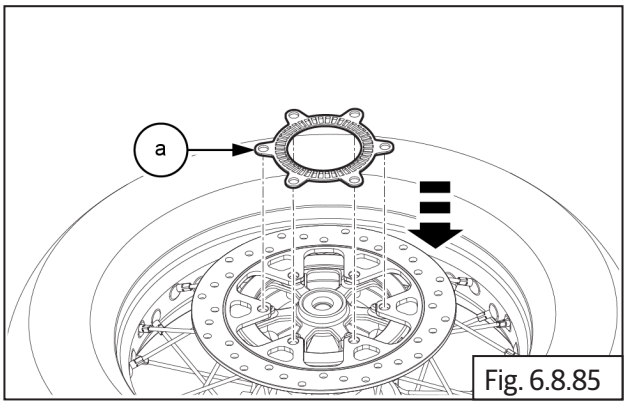

Fig. 6.8.85

- Locate and tighten **6 Nos**. Hex head button socket screws **(M8) (a)** into rear wheel disc hub RH.

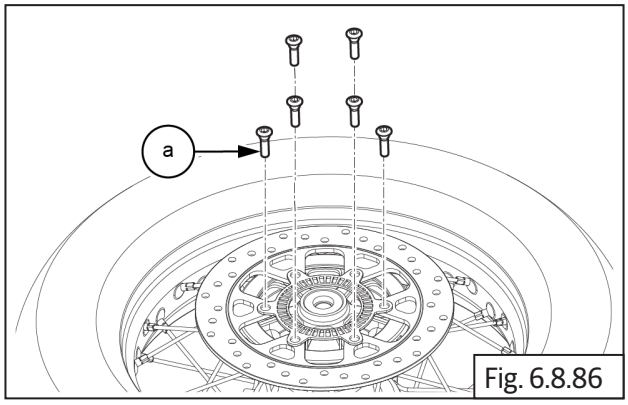

Fig. 6.8.86

	6 mm Allen socket with Ratchet
	32-36 Nm / 3.2 - 3.6 kgf-m

- Clean cushion rubbers seating area and insert **5 Nos.** cushion rubbers **(a)** into rear wheel hub LH and gently tap with mallet .

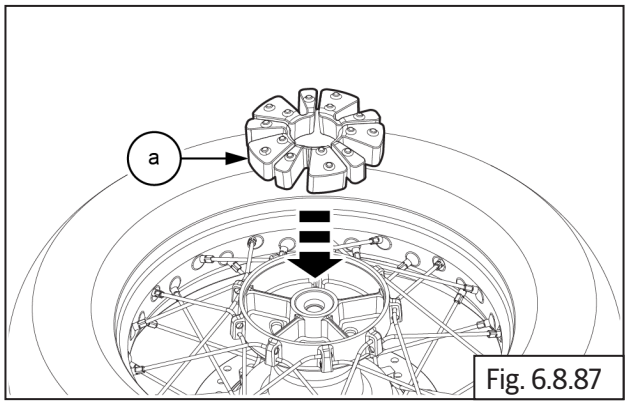

Fig. 6.8.87

NOTE
• *Always use new cushion rubbers as they are for one time usage only.*

- Locate bearing **(a)** into sprocket carrier Ensure it is properly seated on the slot.

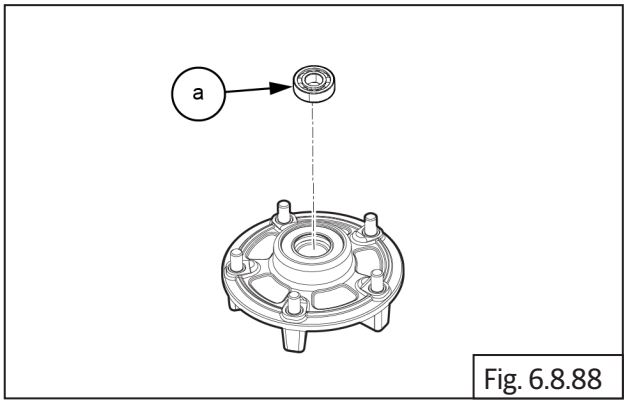

Fig. 6.8.88

- Apply **0.3 grams** of grease on seal to inner and outer diameter surface.
- Assemble grease seal **(a)** into sprocket carrier.

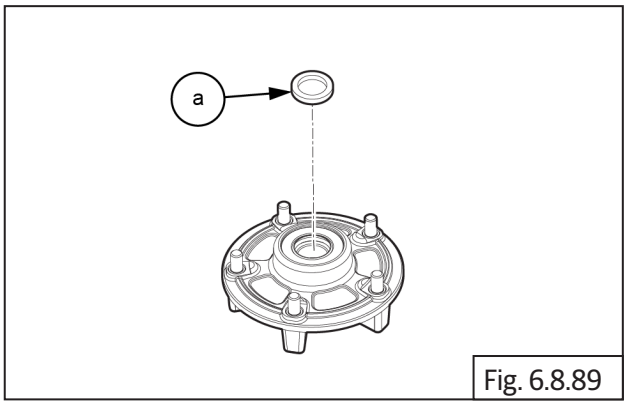

Fig. 6.8.89

	NLGI 2 / Mobil XHP 222
	Seal installer

- Locate and gently tap the spacer **(a)** into sprocket carrier .

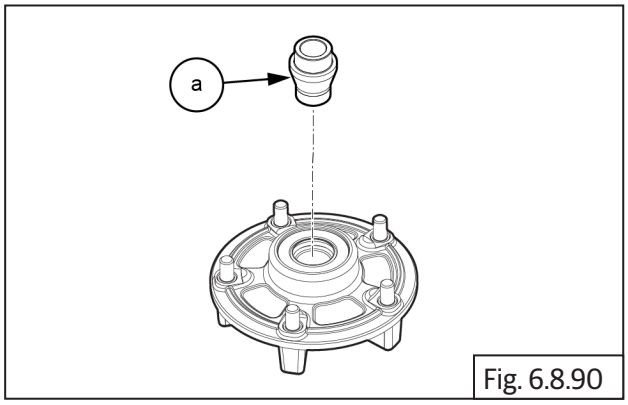

Fig. 6.8.90

	Mallet

- Assemble rear sprocket carrier **(a)** over cushion rubbers into rear wheel hub LH .

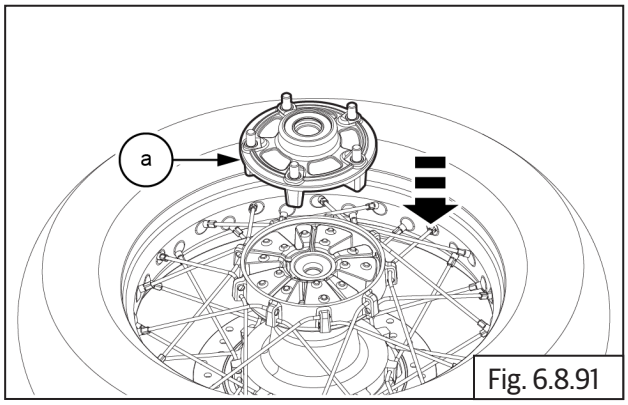

Fig. 6.8.91

- Locate chain drive sprocket **(a)** into sprocket carrier on rear wheel hub LH.

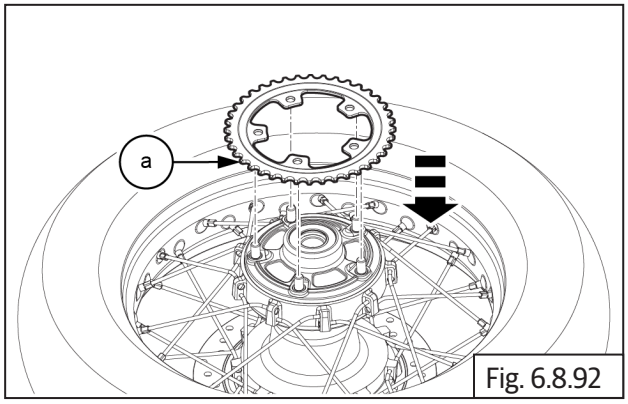

Fig. 6.8.92

- Locate and tighten nut **5 Nos (M10) (a)** into carrier on rear wheel LH.

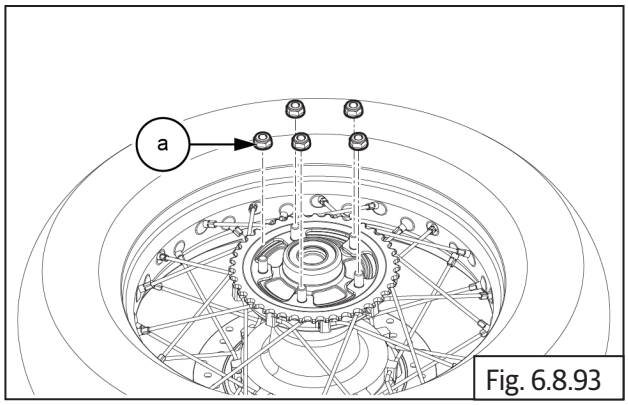

Fig. 6.8.93

	17 mm socket with Ratchet
	43- 47 N-m / 4.3 - 4.7 kgf-m

6.8.11. Rear Wheel into Swing Arm

- Gently locate rear wheel into swing arm.

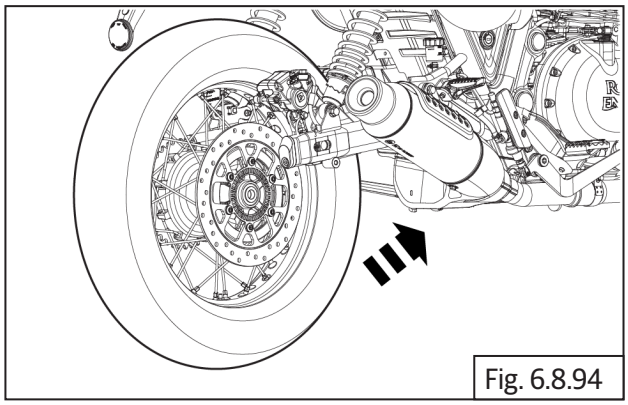
Fig. 6.8.94

- Insert spacers into rear wheel hub RHS **(b)** and LHS **(a)**.

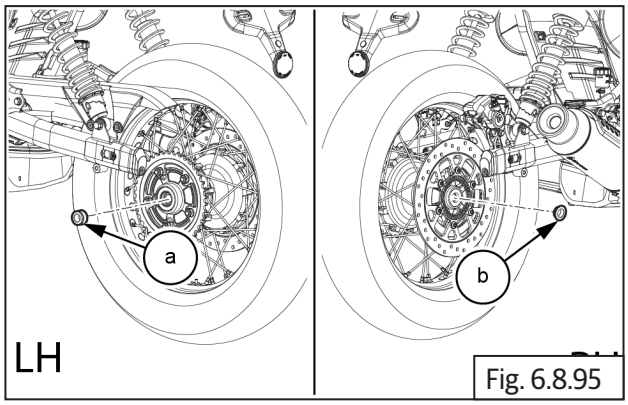

Fig. 6.8.95

- Locate drive chain **(a)** onto sprocket and align wheel into swing arm.

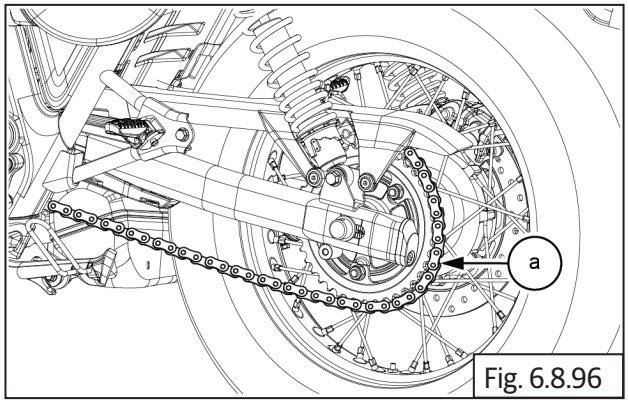

Fig. 6.8.96

- Assemble chain adjuster assembly **(a)** cap **(b)** with bolt **(d)** and washer **(c)** into swing arm LHS.

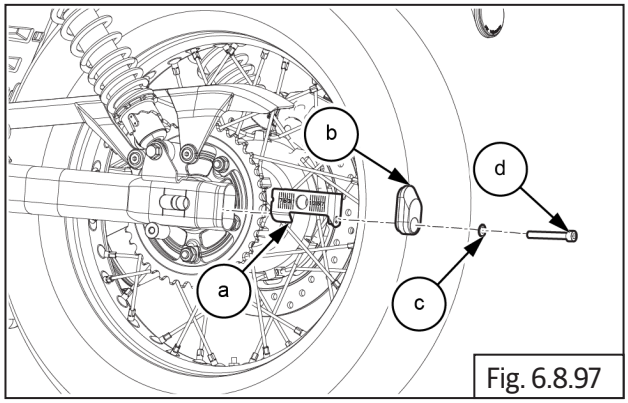

Fig. 6.8.97

- Assemble chain adjuster assembly **(a)** cap **(b)** with bolt **(d)** and washer **(c)** into swing arm RHS.

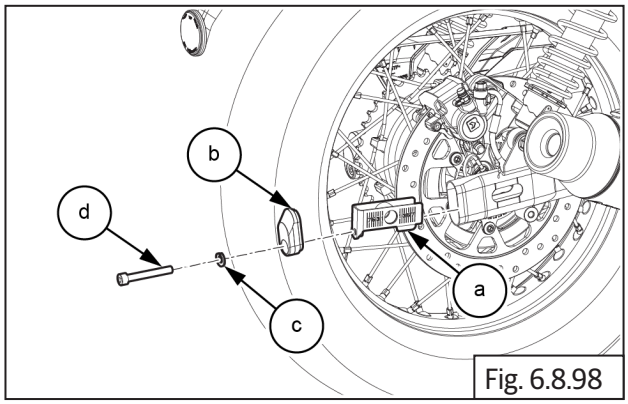

Fig. 6.8.98

- Apply **20 grams** of grease on spindle before install.
- Insert spindle **(a)** with tommy bar into rear wheel hub LH along with washer **(b)**.

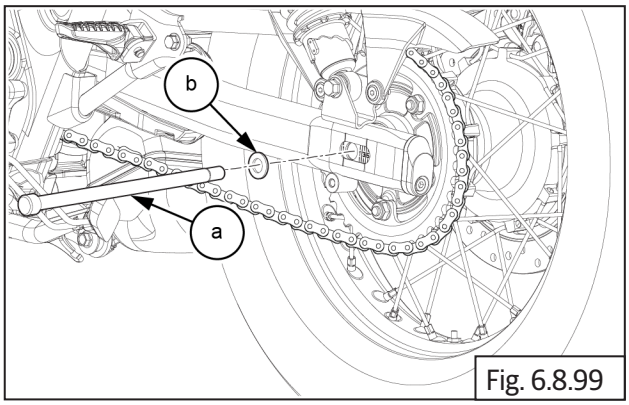

Fig. 6.8.99

	Veedol AP3

	Tommy bar

- Install washer **(a)** into spindle RH.

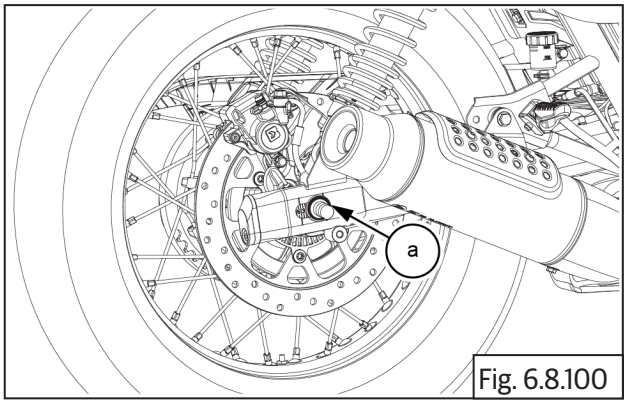

Fig. 6.8.100

- Assemble Hex nut **(M16) (a)** and tighten into swing arm.

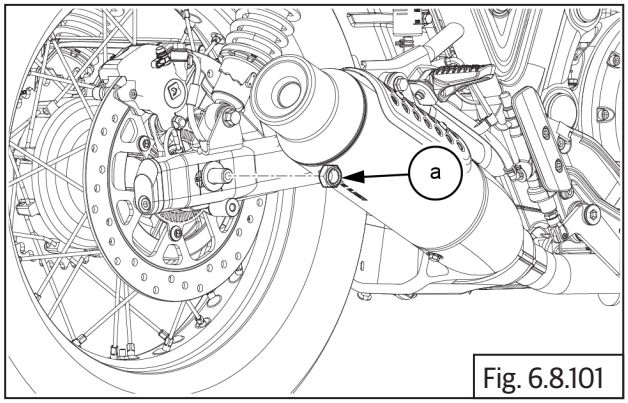

Fig. 6.8.101

	24 mm Socket with Ratchet
	63 - 77 N-m / 6.3 - 7.7 kgf-m

- Hold spindle LH with tommy bar **(a)** and tighten the nut **(M16) (b).** Before tightening the spindle, refer drive chain free play adjustment.

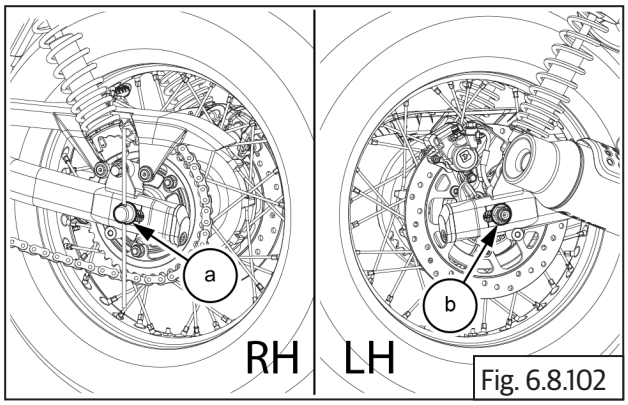

Fig. 6.8.102

	24 mm Socket with Ratchet / Tommy bar
	63 - 77 N-m / 6.3 - 7.7 kgf-m

- Tighten the adjuster bolt **(M8) (a)** and **(b)** to both LHS and RHS .

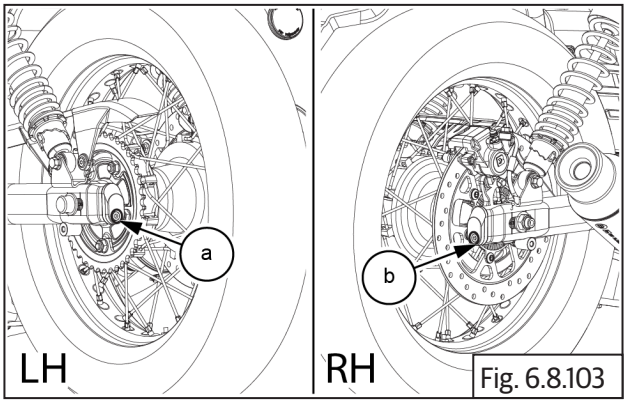

Fig. 6.8.103

	6 mm Allen Socket with Ratchet
	9 -11 N-m / 0.9 - 1.1 kgf-m

- After completing rear wheel assembly into motorcycle, ensure chain slack is as per specifications.

6.8.12. Drive Chain Free Play Adjustment

- Rear wheel will be assembled to the vehicle with the spindle nut hand-started but not tightened.
- Vehicle will be placed on the center stand and in neutral gear, ensuring the rear wheel is clear of the ground.
- On a point half-way along the chain run between the sprockets the maximum displacement (shown as A below) is measured. This value should be in the range of **20-30mm**.

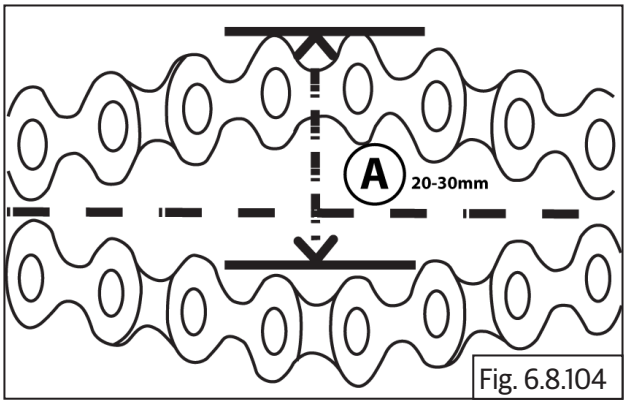

Fig. 6.8.104

- Inspect chain free play at 3 locations using a ruler. Free play for drive chain should be between **20 mm to 30 mm**.

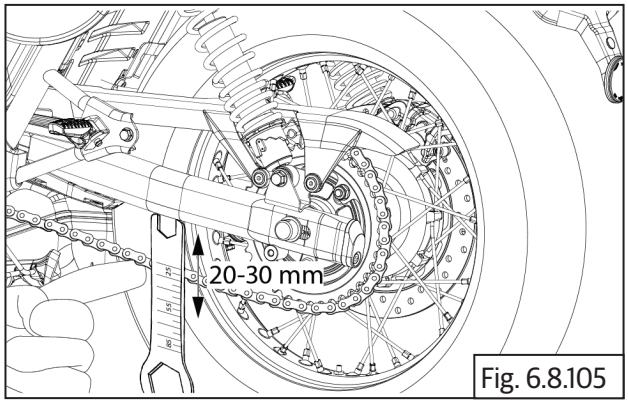

Fig. 6.8.105

- If the free play of the drive chain is not between 20 mm to 30 mm then hold spindle **(a)** on LH using a tommy bar and loosen **(M16) (b)** axle nut on RH.

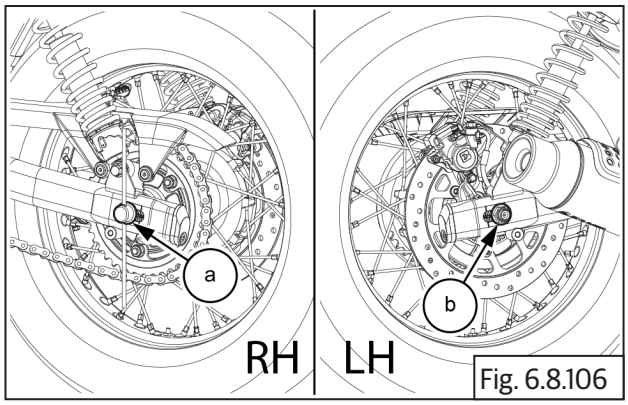

Fig. 6.8.106

	24 mm Socket with Ratchet / Tommy bar

- To reduce free play loosen the lock nut **(M8) (a) and (b)** in anti clockwise and tighten the adjuster nut in clockwise both LH and RH.

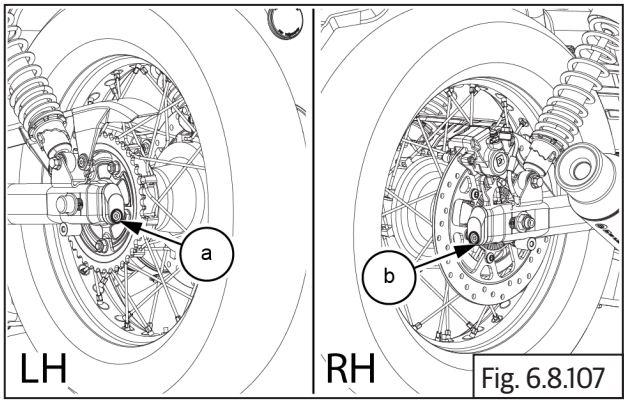

Fig. 6.8.107

	6mm Allen socket with Ratchet

- Ensure the lines **(a)** and **(b)** are matched with the lines punched in swing arm on both LH & RH side for proper wheel alignment.

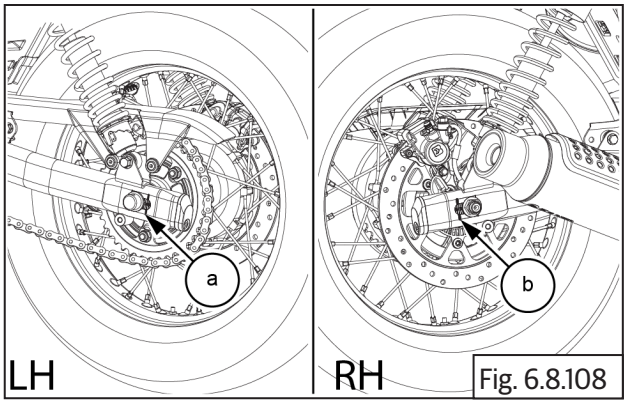

Fig. 6.8.108

- Now measure the drive chain free play using ruler and it should be between **20 mm to 30 mm**.

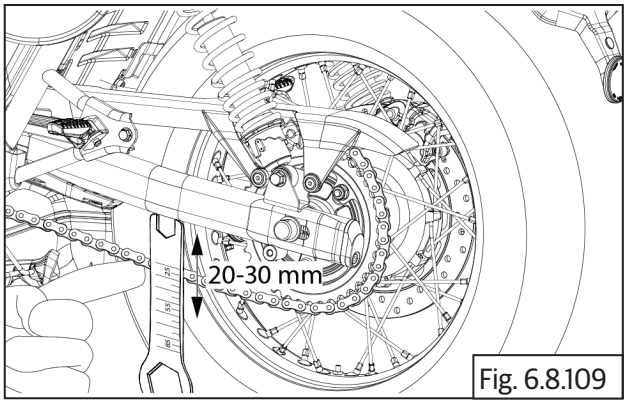

Fig. 6.8.109

⚠ CAUTION

Chain slackness beyond 40 mm will lead to chain slippage or breakage.

- Once chain free play is verified, hold spindle LH with tommy bar **(a)** and tighten the wheel axle nut **(M16) (b)**.

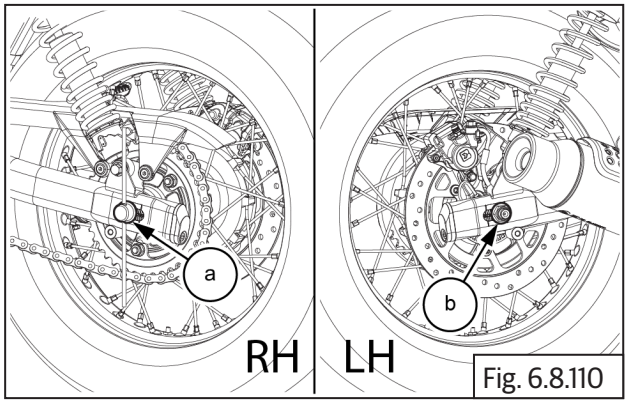

Fig. 6.8.110

	24 mm Socket with Ratchet / Tommy bar
	63 - 77 N-m / 6.3 - 7.7 kgf-m

6.8.13. Front Wheel and Front Brake Disc

NOTE
• When installing the front wheel bearing, first insert the bearing into the wheel hub LH (disc side).

- Locate bearing LH **(a)** into rear wheel hub LH. Gently tap on the bearing and ensure it is seated properly on the hub.

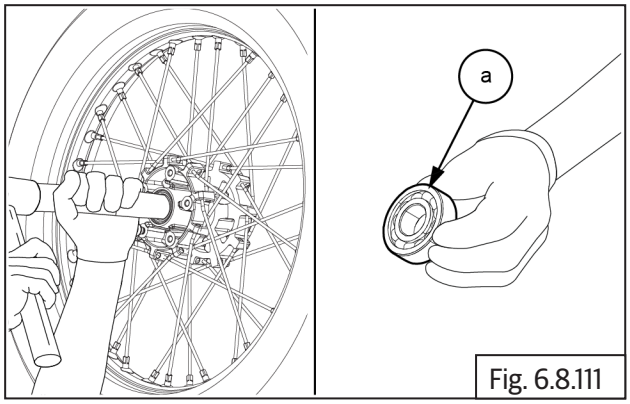

Fig. 6.8.111

- Insert bearing spacer **(a)** from LH side of front hub.

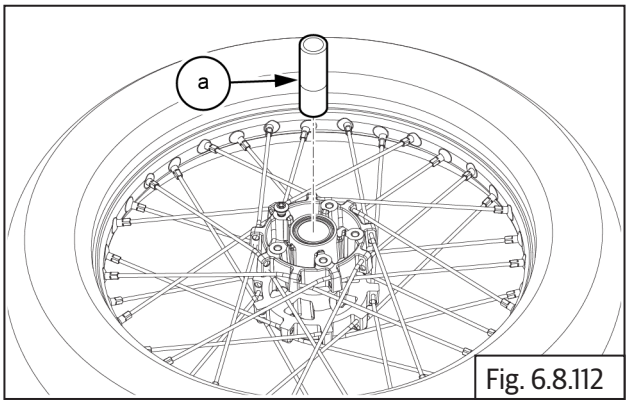

Fig. 6.8.112

- Locate bearing RH **(a)** into rear wheel hub RH. Gently tap on the bearing and ensure it is seated properly on the hub.

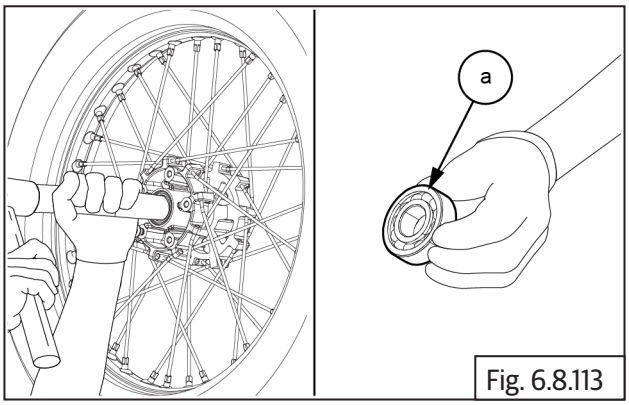

Fig. 6.8.113

- Apply **0.3 grams** of grease on seal to inner and outer diameter surface.
- Install grease seal **(a)** into wheel hub LHS and RHS with seal installer.

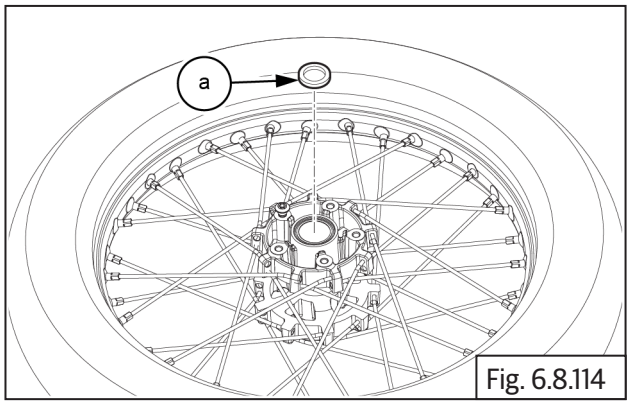

Fig. 6.8.114

	NLGI 2 / Mobil XHP 222

	Seal installer

- Install the damper rubber **(a)** on front wheel hub.

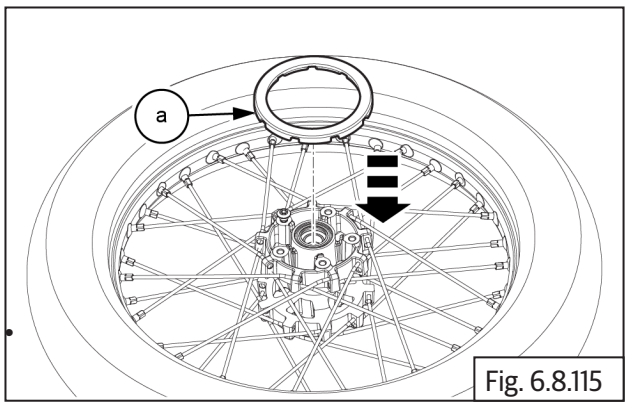

Fig. 6.8.115

- Locate front brake disc **(a)** on wheel hub with the disc facing up. Ensure mounting holes are correctly aligned.

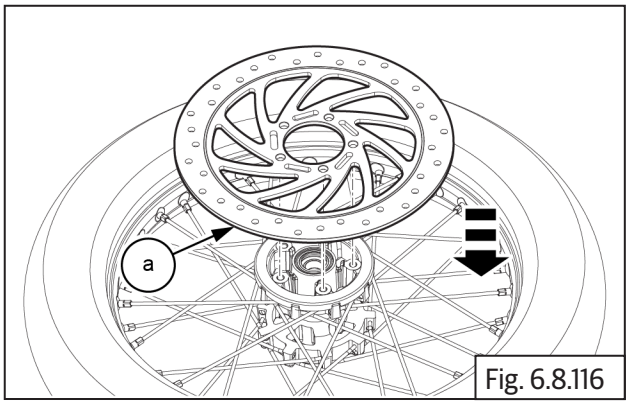

Fig. 6.8.116

- Position toner wheel **(a)** on front disc and ensure mounting holes are correctly aligned.

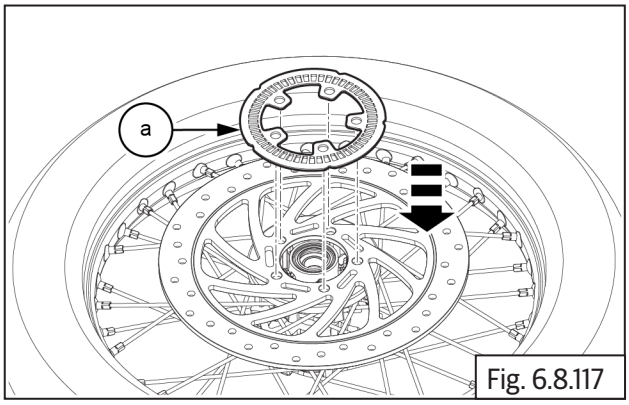

Fig. 6.8.117

- Locate and tighten the **5 Nos** Hex socket head bolts **(M8) (a)** on the mounting holes and tighten toner ring and brake disc to the wheel hub in crisscross patten to specified torque.

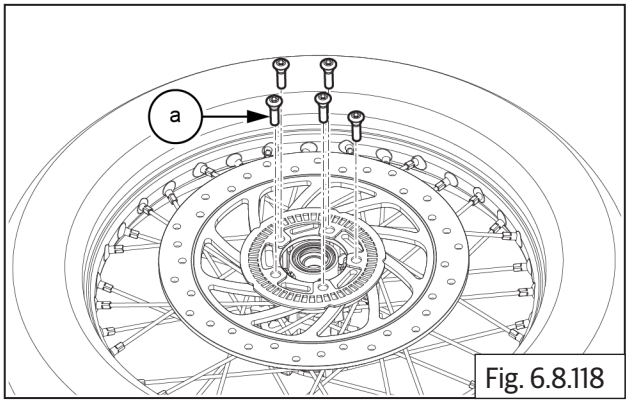

Fig. 6.8.118

	6 mm Allen socket with Ratchet
	32-36 Nm / 3.2 - 3.6 kgf-m

6.8.14. Front Wheel into Front Fork Assembly

- Carefully align front wheel **(a)** into front fork assembly .

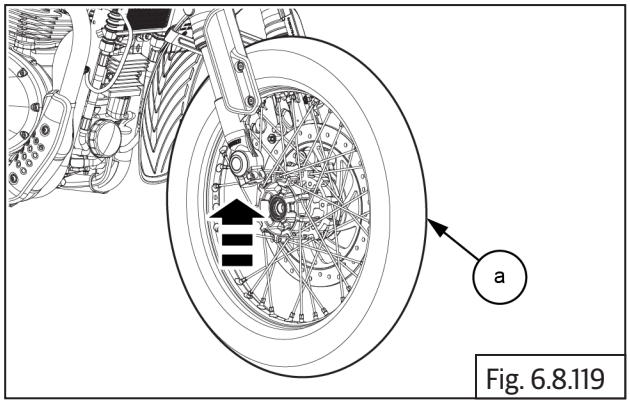

Fig. 6.8.119

- Insert spacer **(a)** and **(b)** into wheel hub on LH and RH.

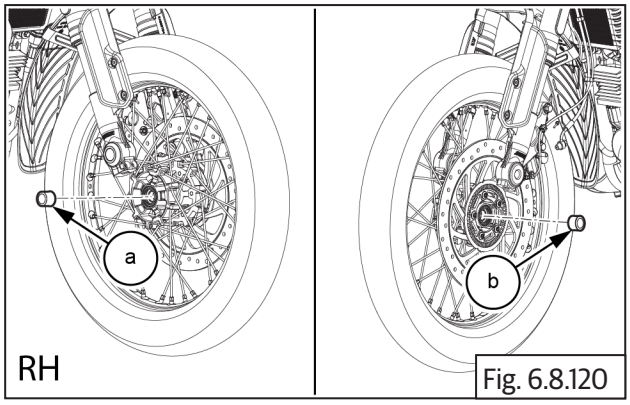

Fig. 6.8.120

- Apply **20 grams** of grease on spindle before install
- Insert spindle **(a)** into front RH fork assembly and wheel hub.
- Gently tighten spindle **(a)** into front RH fork assembly and wheel hub.

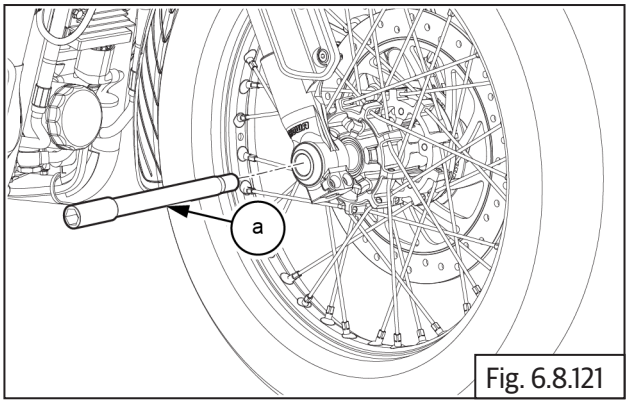

Fig. 6.8.121

	Veedol AP3

	14 mm Front spindle Adapter
	63-77 Nm / 6.3 - 7.7 kgf-m

- Insert cap bolts **2 Nos (M8) (a)** into front fork assembly RH.

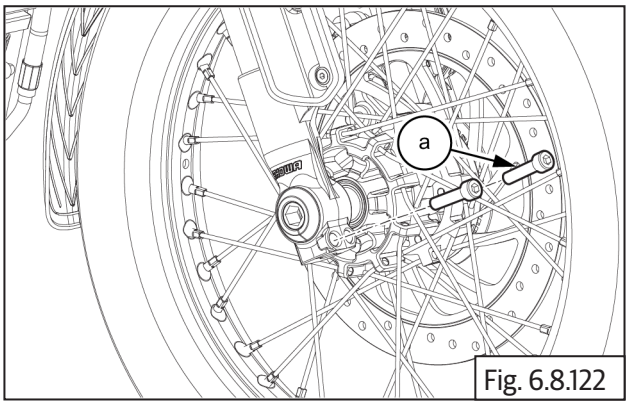

Fig. 6.8.122

- Tighten cap bolts **2 Nos (M8) (a)** into front fork assembly RH.

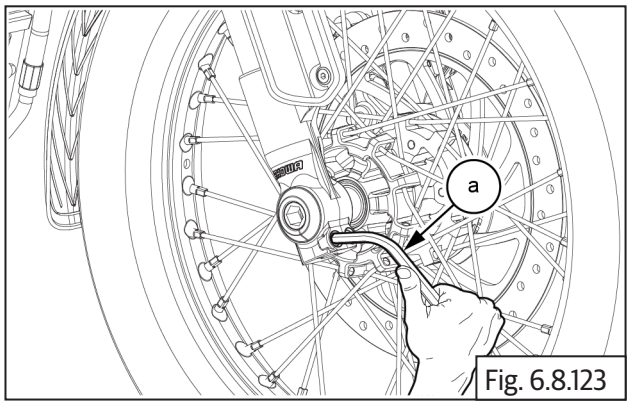

Fig. 6.8.123

	6 mm Allen socket with Ratchet
	23-27 Nm / 2.3 - 2.7 kgf-m

6.8.15. Troubleshooting

Symptom	Possible Cause	Diagnosis	How To Fix	Standard tyre	Replacement tyre: Replace with standard or with below mentioned tyre
1. Tyres Related					
Centre Threads Wear-Out Is High/ Poor Traction/ Unstable Riding	Tyre pressure is more than recommended.	Front and rear tyre pressure is over inflated.	Ensure correct tyre pressures.	**Solo:** **Front tyre**: 32 psi/2.2 kg/cm². **Rear tyre:** 36 psi/2.2 kg/cm² **With Pillion:** **Front tyre:** 32 psi/2.2 kg/cm². **Rear tyre:** 42 psi/2.9 kg/cm²	
Side Threads Wear-Out Is High/Side Wall Has Cracks/ Motorcycle Has Dragging/ Unstable Riding	Tyre pressures is less than recommended.	Front and rear tyre pressures under inflated side walls have minute cracks.	Check inner tubes for any puncture/ leaky valve pins ensure correct tyre pressures.	**Solo:** **Front tyre**: 32 psi/2.2 kg/cm². **Rear tyre:** 36 psi/2.2 kg/cm² **With Pillion:** **Front tyre:** 32 psi/2.2 kg/cm². **Rear tyre:** 42 psi/2.9 kg/cm²	
Rear Tyre Wear-Out On One Side	Improper wheel alignment.	Rear wheel misaligned with respect to front wheel.	Check and correct wheel alignment.		

Symptom	Possible Cause	Diagnosis	How To Fix	Standard tyre	Replacement tyre: Replace with standard or with below mentioned tyre
Tyre/S Wearing Out Is Uneven/ Motorcycle Is Unstable/ Wobbling	Internal defect/ poor quality tyre.	Tyres found to have bulges/cracks in side wall. Threads are separated from the tyre.	Replace with Royal Enfield recommended tyres.	**Front tyre:** Make: MRF NYLOREX-F Size: 100/90-19 M/C 57H **Rear tyre:** Make: MRF NYLOREX-X Size: 140/80R17 M/C 69H	**Front tyre:** Make, Type: Pirelli Scorpion Rally STR Size: 100/90-19 M/C 57V **Rear tyre:** Make, Type: Pirelli Scorpion Rally STR Size: 140/80R17 M/C 69V
	Tyre seating on rims is improper.	Tyre bead is uneven at the rim surface.	Remove tyre and reset correctly.		
	Wheel rims have a defect.	Wheel rims are bent/have excessive run out.	Remove tyre and carry out proper wheel truing.		
	Rims have excessive side play.	Wheel bearings worn-out/ excessive play.	Remove and replace wheel bearings.		
2. Wheel Rims Related					
Motorcycle Is Unstable/ Wobbling	Tyre seating on rims is improper	Tyre bead is uneven at the rim surface	Remove tyre and reset correctly		
	Wheel rims are out of trueness	Wheel rims are bent/have excessive run out	Remove tyre and true the wheel rim correctly		
	Wheel rims have a crack/heavy damage	Wheel rims are cracked/damaged due to impact	Replace with royal enfield genuine wheel rims		
3. Others					
Motorcycle Is Unstable/ Wobbling	Spokes are Broken	One/several spokes are broken	Replace spokes and correct wheel trueness		
	Wheels have excessive axial/side play	Wheel bearings are worn-out	Remove bearing and replace		
	Hubs Front/rear are cracked/damaged	Wheel Hubs are damaged due to impact	Replace with Royal Enfield genuine hubs		

NOTE

- *The trouble shooting given in this section is only related to the issues with wheels. For complaints related to other issues such as poor suspension action/handling/unstable ride please refer to suspension.*

SUSPENSION

CONTENTS **PAGE**

6.9 Suspension 463

Dismantling 463

6.9.1. Steering Stem from Frame Head Tube 463

6.9.2. Ball Bearing Outer Race from Frame top and bottom Headstock Tube 465

6.9.3. Bottom Roller Bearing from Steering Stem 467

6.9.4. Rear Shock absorber 469

6.9.5. Swingarm 470

Inspection 472

6.9.6. Steering Stem 472

6.9.7. Rear Shock absorber 473

6.9.8. Swingarm 473

6.9.9. Top Yoke 473

Assembly 474

6.9.10. Swingarm 474

6.9.11. Rear Shock absorber 477

6.9.12. Bottom Roller Bearing into Steering Stem 478

6.9.13. Ball Bearing into Frame top and bottom Head Tube 478

6.9.14. Steering Stem into Frame Head Tube 480

6.9.15. Rear Suspension Setting 482

6.9.16. Troubleshooting 484

6.9 Suspension

Dismantling

6.9.1. Steering Stem from Frame Head Tube

⚠ CAUTION

Ensure the motorcycle is upright on a firm and flat surface.

- Position the screw jack directly under the boss of the crank case.
- Carefully use the screw jack to lift the motorcycle until the front wheel is off the ground.
- Make sure the motorcycle is stable and secure before performing any maintenance or repairs.

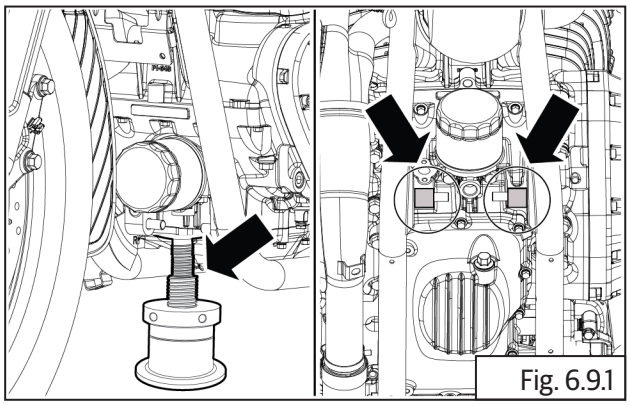

Fig. 6.9.1

- Ensure ignition and stop switch are in off position.
- Remove the Front wheel. (Refer----------)
- Release brake hose and wheel speed sensor wires from the clips. (Refer----------)
- Wheel caliper from fork end RH. Support caliper suitably. (Refer----------)
- Wheel speed sensor from the fork end RH. (Refer----------)
- Remove the Front mudguard. (Refer----------)
- Remove the Front number plate. (Refer----------)
- Remove the Headlamp assembly and housing. (Refer----------)
- Remove the Trafficators. (Refer----------)
- Disconnect ignition switch connector. (Refer----------)
- Disconnect instrument cluster wiring connector. (Refer----------)
- Remove the Instrument cluster from top yoke. (Refer----------)
- Remove the Aggregates of Handlebar. (Refer----------)
- Remove the Handlebar. (Refer----------)
- Remove the Upper Yoke. (Refer----------)
- Loosen 4 Nos. cap bolt **(M8) (a)** on LHS and RHS steering stem.

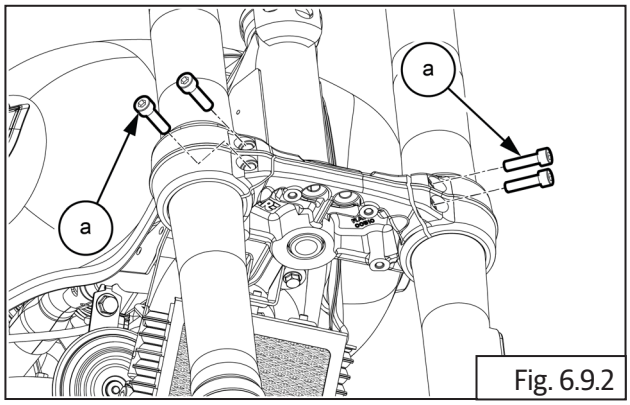

Fig. 6.9.2

	6 mm Allen socket with Ratchet

- Remove both fork assembly **(a)** from steering stem.

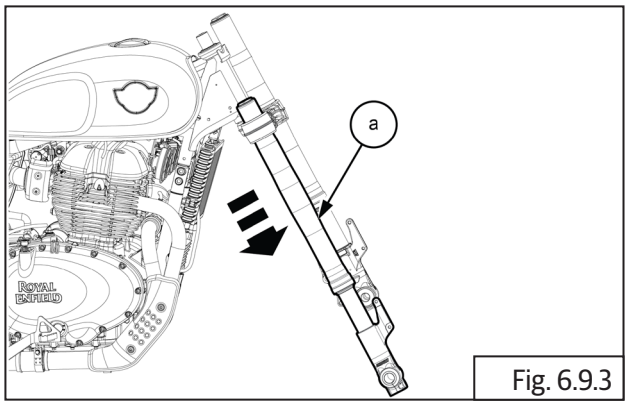

Fig. 6.9.3

- Turn steering stem to extreme left, loosen and remove stem nut **(a)**.

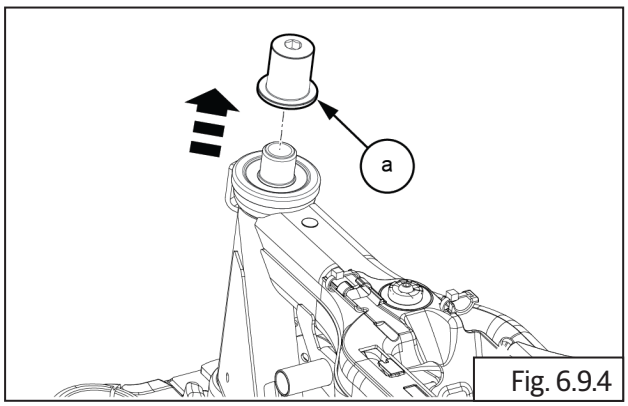

Fig. 6.9.4

	8 mm Allen socket with Ratchet

⚠ CAUTION

Support steering stem from bottom. DO NOT allow the steering stem to drop out of frame head tube.

- Hold steering stem from bottom and remove cover headstock cover **(a)**.

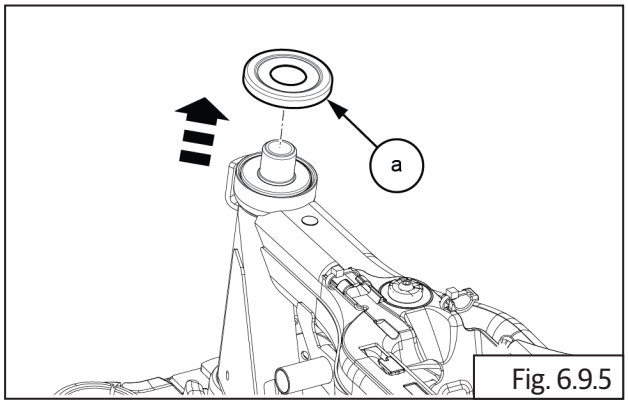

Fig. 6.9.5

- Hold steering stem from bottom and remove headstock seal **(a)**.

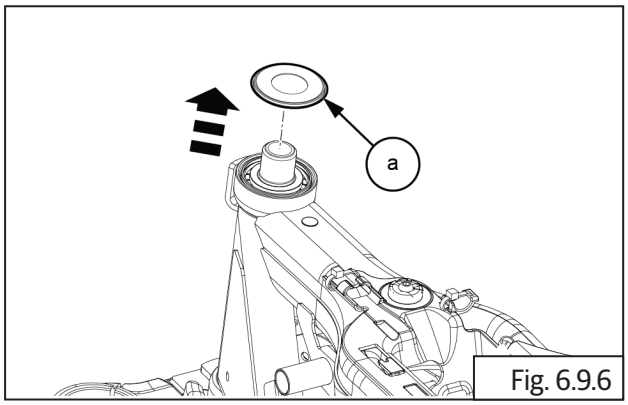

Fig. 6.9.6

- Gently pull out roller bearing **(a)** from frame head tube top.

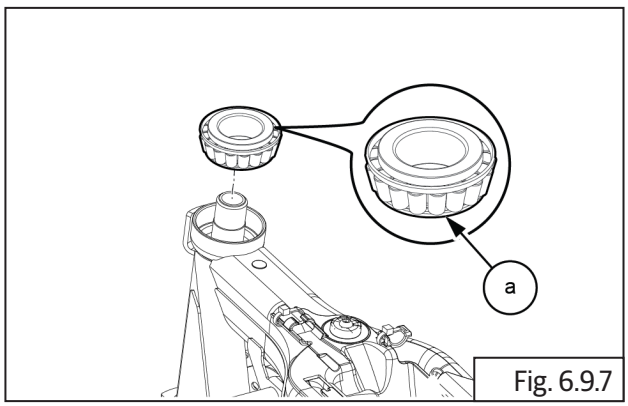

Fig. 6.9.7

- Gently pull out steering stem **(a)** from frame head tube bottom.

⚠ CAUTION

Support steering stem from bottom. DO NOT allow the steering stem to drop out of frame head tube.

⚠ CAUTION

DO NOT tap or use force to remove steering stem from frame head tube.

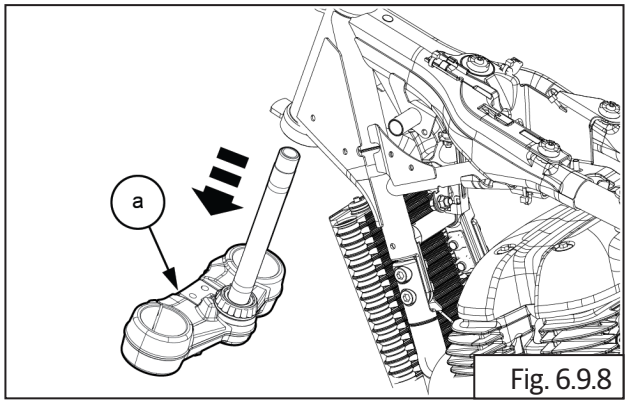

Fig. 6.9.8

6.9.2. Ball Bearing Outer Race from Frame top and bottom Headstock Tube

- Top headstock tube ball bearing outer race and bottom headstock tapper roller bearing outer race removing special tool.

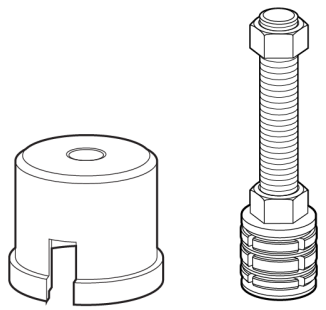

Fig. 6.9.9

SPL 	Part No: ST30272/a Part No: ST-31892-a
	Part Name: Headstock bearing puller assembly Part Name: Headstock Ball Race Remover

NOTE

- *The tool bunk gap should be evenly spaced, with the spring end located in the middle of the bunk position.*
- *When the tool is in idle position or being stored, the top nut of the tool should be in loosened condition.*
- *Following the above condition increases the tool life.*

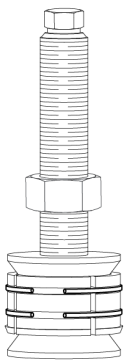

Fig. 6.9.10

- Install special tool **(a)** on frame head tube top **(b)**. Ensure tool is seated properly.

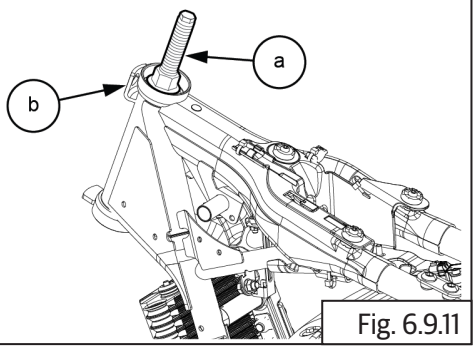

Fig. 6.9.11

SPL 	Part No: ST30272/a Part No: ST-31892-a
	Part Name: Headstock bearing puller assembly Part Name: Headstock Ball Race Remover

- Rotate tool in clockwise direction and tighten lock nut **(a)**.

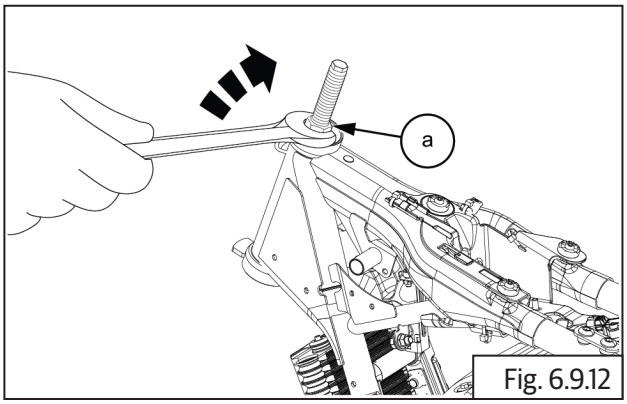

Fig. 6.9.12

SPL 	Part No: ST30272/a Part No: ST-31892-a
	Part Name: Headstock bearing puller assembly Part Name: Headstock Ball Race Remover
	24 mm Double end spanner and 10 mm Double end spanner.

- Hold lock nut **(a)** and tighten threaded strut **(b)** till resistance is felt and strut cannot be turned further.

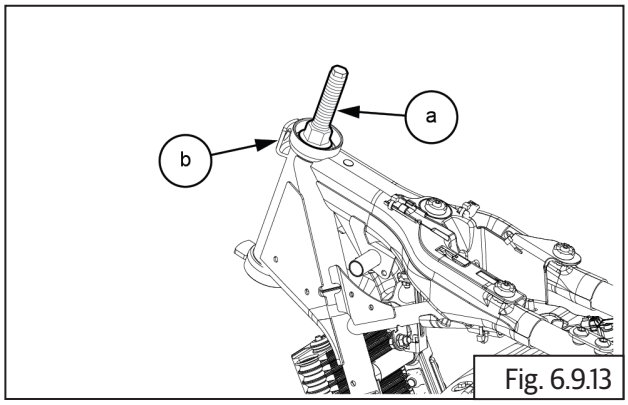

Fig. 6.9.13

	24 mm Double end spanner and 10 mm Double end spanner.

- Assemble puller cup **(a)**, washer **(b)** and hex nut **(M16) (c)** on strut as shown.

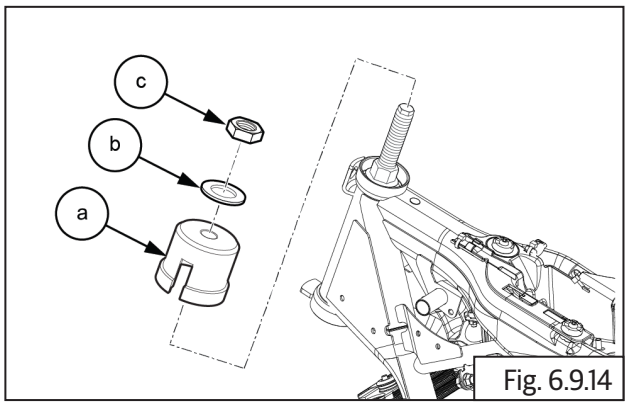

Fig. 6.9.14

SPL	Part No: ST30272/a Part No: ST-31892-a
	Part Name: Headstock bearing puller assembly Part Name: Headstock Ball Race Remover

- Tighten hex nut **(M16) (a)** in clockwise direction till bearing tool assembly comes out of frame head tube and hex nut rotates free.

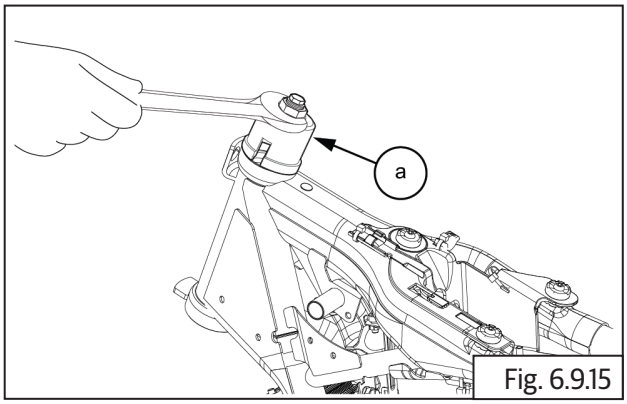

Fig. 6.9.15

	24 mm Double end spanner

- Remove hex nut **(c)**, washer **(b)** and cup **(a)** from strut as shown.

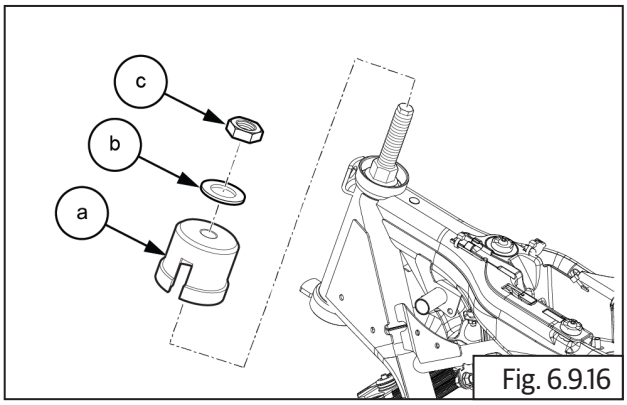

Fig. 6.9.16

- Remove tool **(a)** from frame head tube top **(b)**.

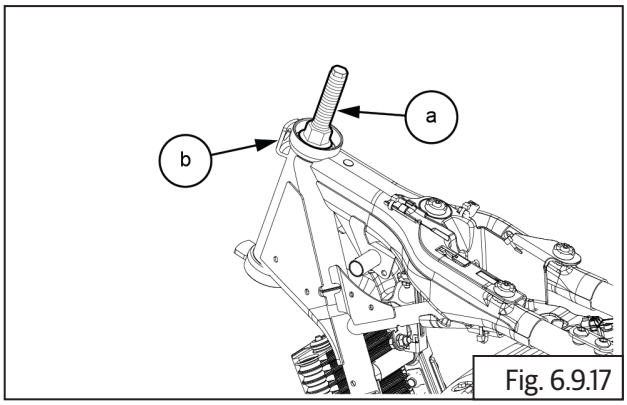

Fig. 6.9.17

- Remove bearing racer **(a)** from the frame head tube top.

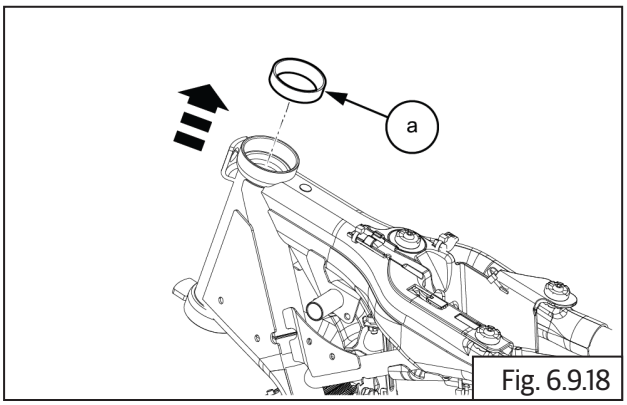

Fig. 6.9.18

- Repeat procedures mentioned above for removing bearing cup from frame head tube bottom.

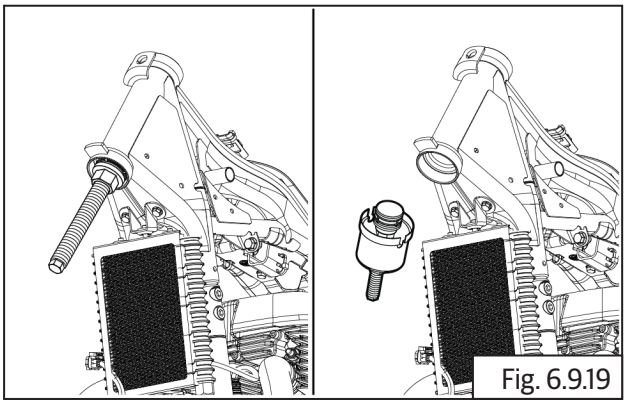
Fig. 6.9.19

SPL 	Part No: ST30272/a Part No: ST-31892-a
	Part Name: Headstock bearing puller assembly Part Name: Headstock Ball Race Remover

6.9.3. Bottom Roller Bearing from Steering Stem

- Use bearing puller T-stem to remove the bearing from T-stem.

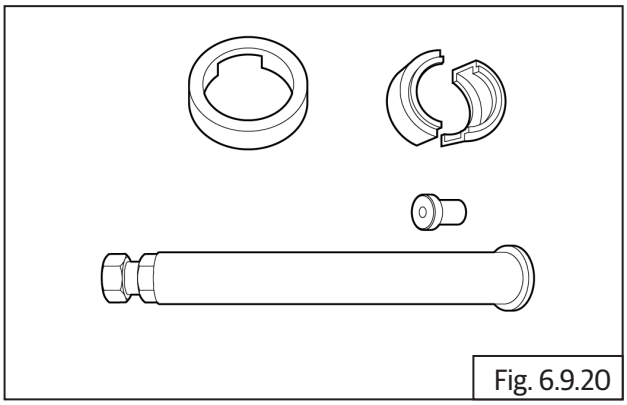
Fig. 6.9.20

SPL 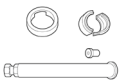	Part No: ST-31889-a / ST-32306-a
	Part Name: T-STEM Taper Roller Bearing Remover

- Locate and place the bunk **(a)** on stem top.

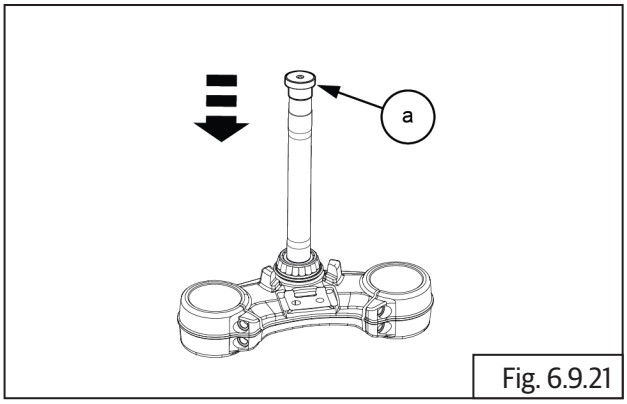

Fig. 6.9.21

SPL 	Part No: ST-31889-a / ST-32306-a
	Part Name: T-STEM Taper Roller Bearing Remover

- Locate and place the sleeve **(a)** into steering stem.

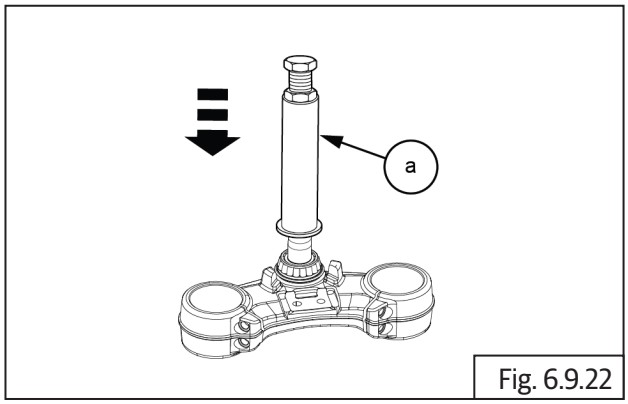

Fig. 6.9.22

SPL	Part No: ST-31889-a / ST-32306-a
	Part Name: T-STEM Taper Roller Bearing Remover

- Locate and place two halve plate **(a)** on the bottom sleeve.

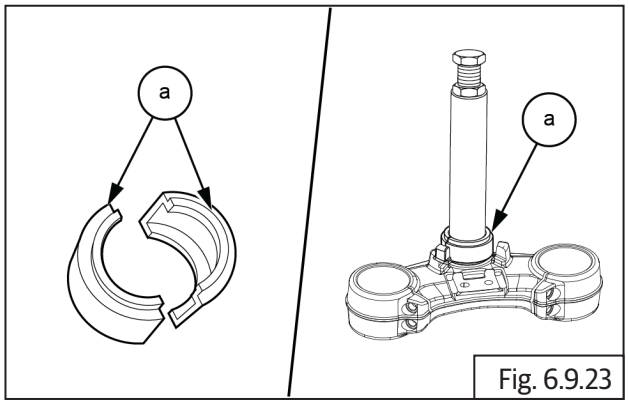

Fig. 6.9.23

SPL	Part No: ST-31889-a / ST-32306-a
	Part Name: T-STEM Taper Roller Bearing Remover

- Locate and position the sleeve **(a)** into steering stem.

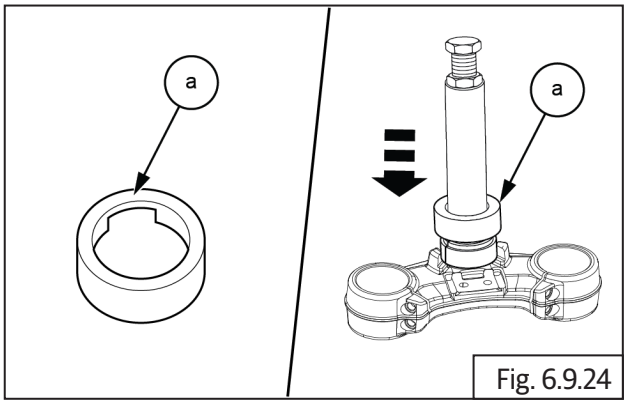

Fig. 6.9.24

SPL	Part No: ST-31889-a / ST-32306-a
	Part Name: T-STEM Taper Roller Bearing Remover

- Tighten hex nut **(a)** in clockwise direction till bearing tool assembly comes out of frame head tube and hex nut rotates free.

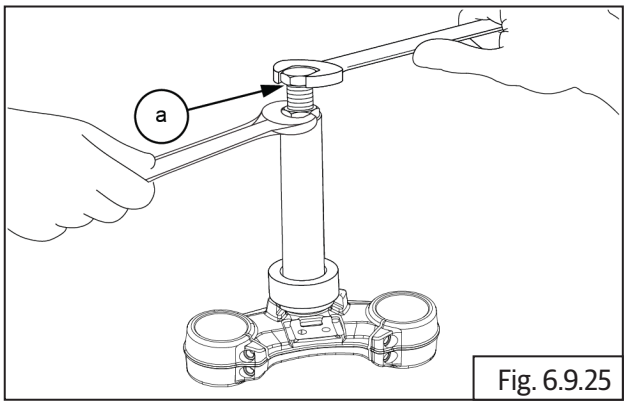

Fig. 6.9.25

	24 mm and 27 mm Double end spanner

- Remove the roller bearing **(a)** from the bottom of the stem.

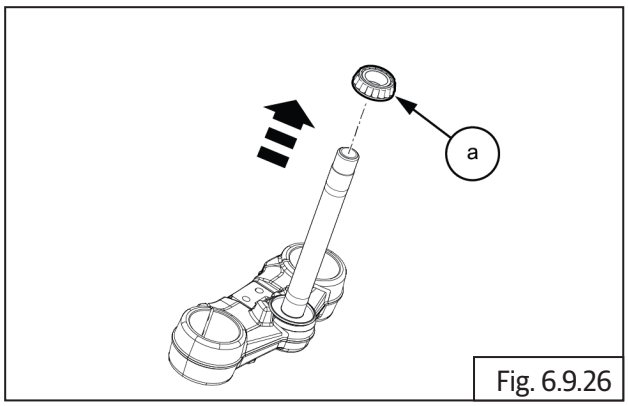

Fig. 6.9.26

6.9.4. Rear Shock absorber

⚠ CAUTION

Ensure the motorcycle is upright on a firm and flat surface.

- Position the screw jack directly under the boss of the crank case.
- Carefully use the screw jack to lift the motorcycle until the front wheel is off the ground.
- Make sure the motorcycle is stable and secure before performing any maintenance or repairs.

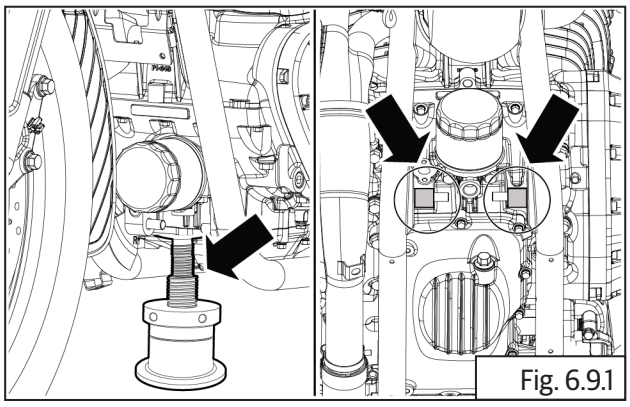
Fig. 6.9.1

- Support rear wheel, loosen and remove bolt **(M10) (a)** from the shock absorber bottom.

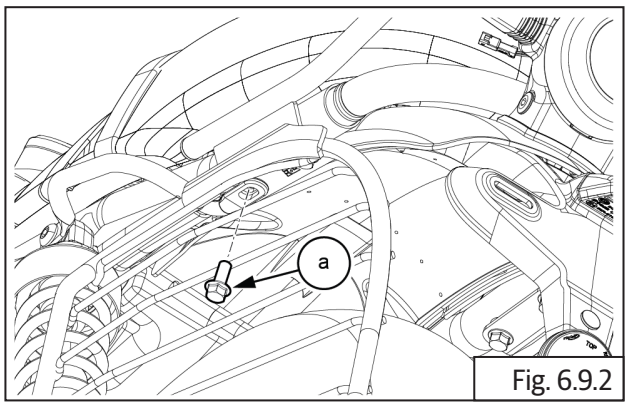

Fig. 6.9.2

	12 mm Socket with Ratchet

- Loosen and remove button head bolt **(M8) (a)** from lift handle **(b).**

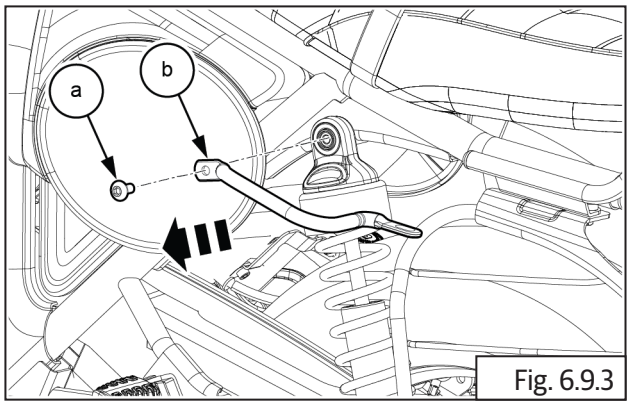

Fig. 6.9.3

	6 mm Allen Socket with Ratchet

- Loosen and remove hex head bolt **((M10) (a)** from rear LHS shock absorber top.

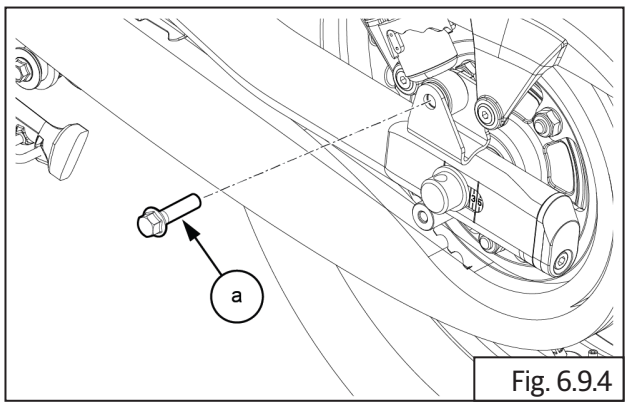

Fig. 6.9.4

	14 mm socket with Ratchet

- Gently remove rear LHS shock absorber **(a)** from Swingarm bracket.

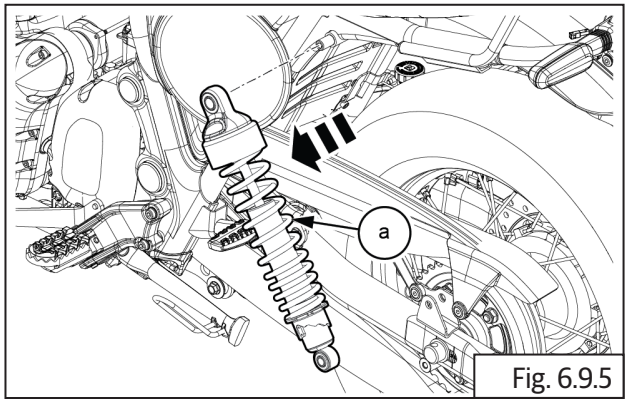

Fig. 6.9.5

- Repeat the above process to remove rear RHS shock absorber.

⚠ CAUTION

Ensure motorcycle is supported suitably at the rear end after removing both shock absorbers to prevent motorcycle from tipping over and falling down.

6.9.5. Swingarm

- Remove the Rear wheel.(Refer ---------).
- Remove the Rear shock absorber LH and RH.(Refer ---------).

⚠ CAUTION

Ensure the motorcycle is upright on a firm and flat surface. Support the motorcycle firmly while removing the swingarm.

- Remove cap **(a)** from LHS & RHS Swingarm spindle

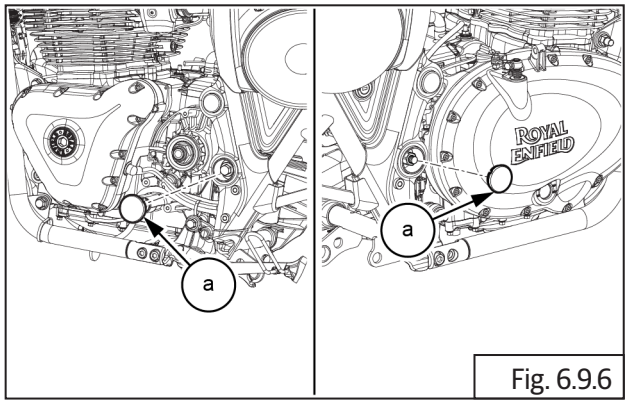

Fig. 6.9.6

	(-) Screw driver

- Hold spindle bolt **(M16) (a)** in frame RH side and loosen and remove hex nut **(M16) (b),** spindle bearing seal **(c)** and thrust washer **(d)** from both end Swingarm. from LH side.

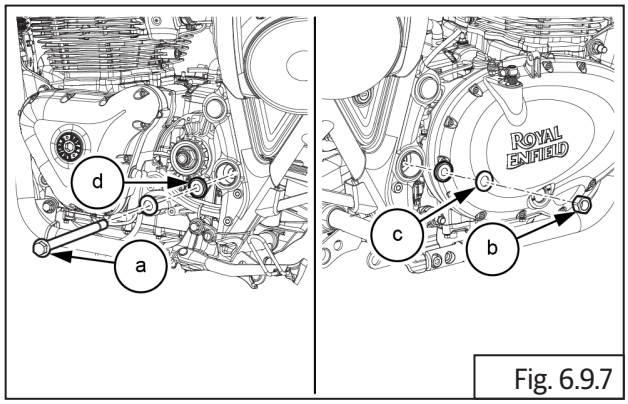

Fig. 6.9.7

	22 mm Socket with Ratchet 24 mm Socket with Ratchet

- Insert special tool **(a)** into frame RH side and loosen the adjuster swingarm in clock wise direction (Left hand thread).

⚠ CAUTION

Adjuster is a left hand thread. Wrong rotation may damage the threads and hub.

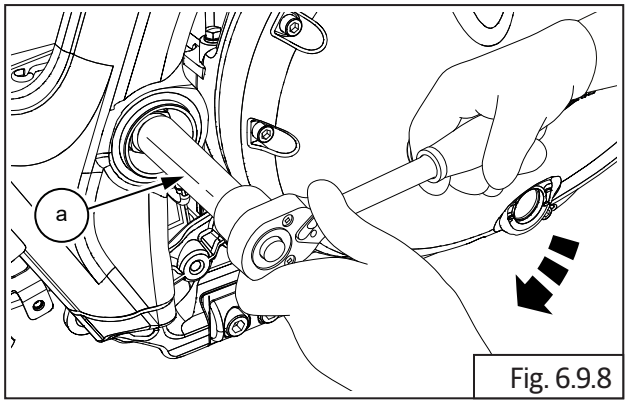

Fig. 6.9.8

SPL 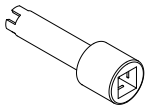	Part No: ST30269/a
	Part Name: Frame Adjuster OD 21.5/ ID18 mm - Swingarm

- Rotate swingarm slightly and release drive chain from swingarm.
- Provide suitable support below chassis frame and remove Swingarm from chassis frame.

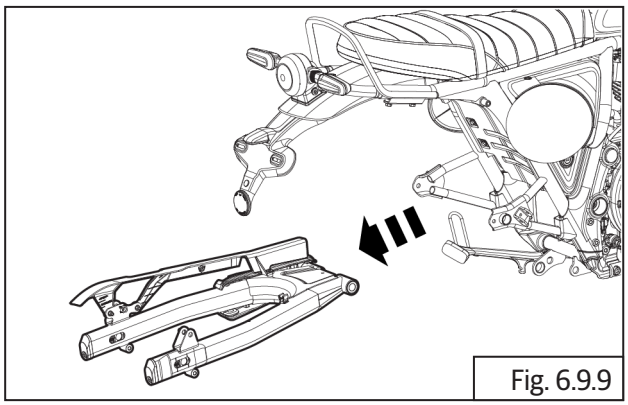

Fig. 6.9.9

- Loosen and remove 2 Nos. allen bolt **(a)** button bolt **(b)** and from Swingarm LHS.

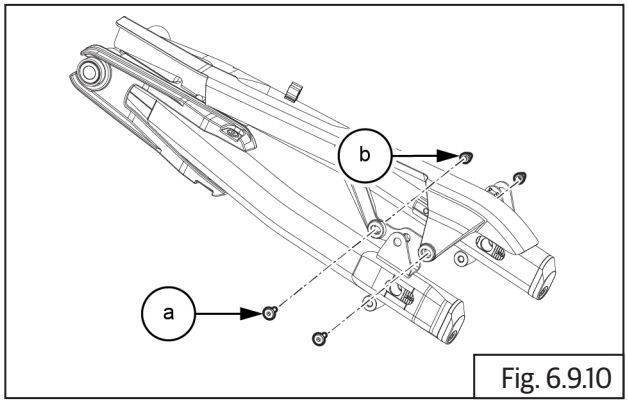

Fig. 6.9.10

	5 mm Allen socket with Ratchet

- Separate chain guard **(a)** from Swingarm RHS.

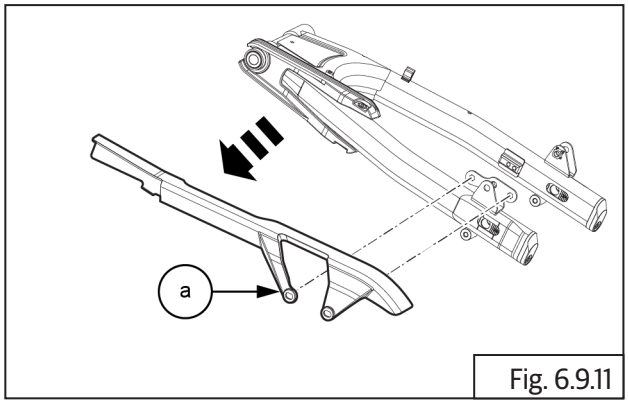

Fig. 6.9.11

- Loosen and remove Hex socket button bolt **(M6) (a)** from Swingarm LHS.

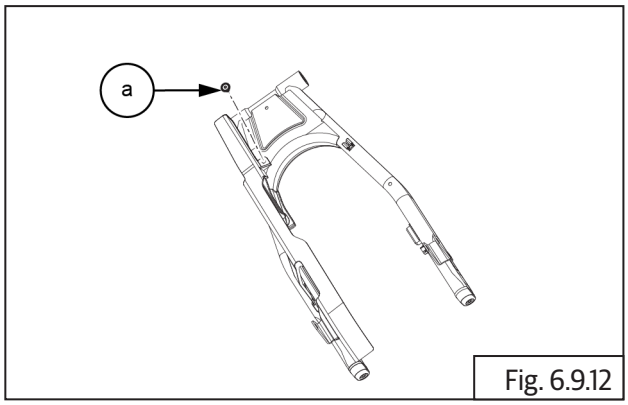

Fig. 6.9.12

	5 mm Allen socket with Ratchet

- Separate chain rubbing stripe **(a)** from Swingarm LHS.

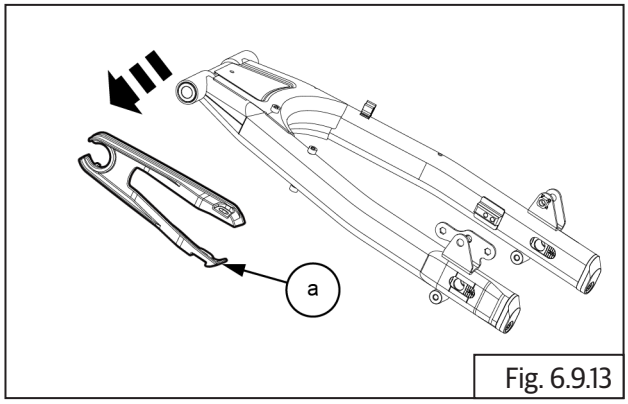

Fig. 6.9.13

- Remove the both end cup **(a)** from Swingarm .

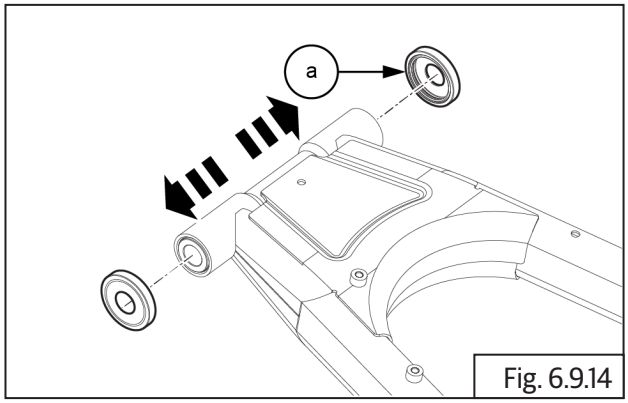

Fig. 6.9.14

- Remove both bearing sleeves **(a)** from Swingarm .

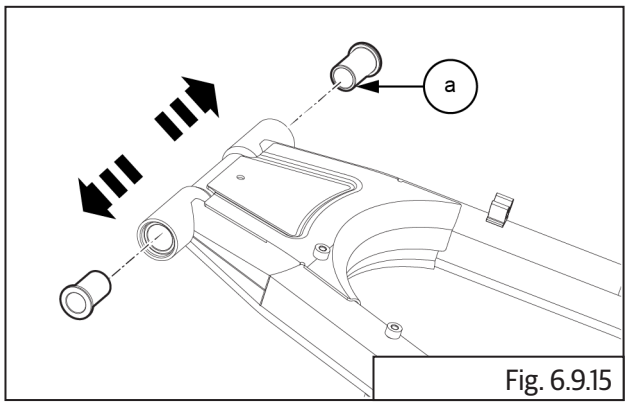

Fig. 6.9.15

- Remove needle bearing **(a)** from Swingarm tube .

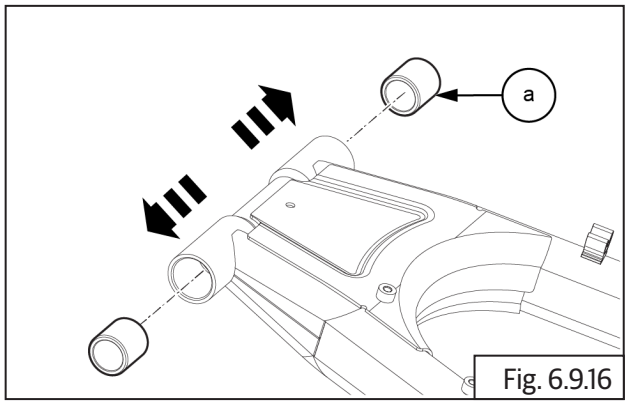

Fig. 6.9.16

- Remove the spacer **(a)** from Swingarm.

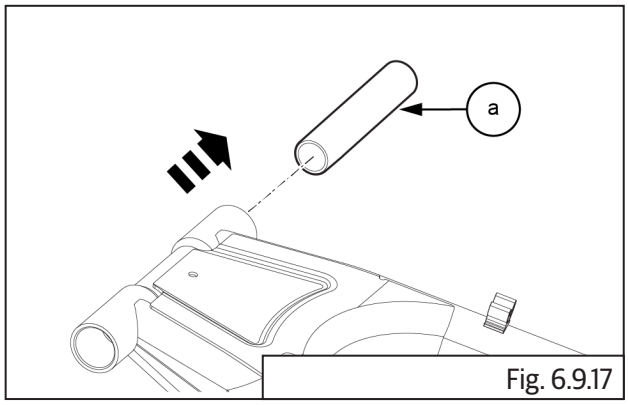

Fig. 6.9.17

Inspection

6.9.6. Steering Stem

- Inspect and replace roller bearing **(a)** if it has rusting, uneven wear of rollers and/or rollers are falling out of cage.

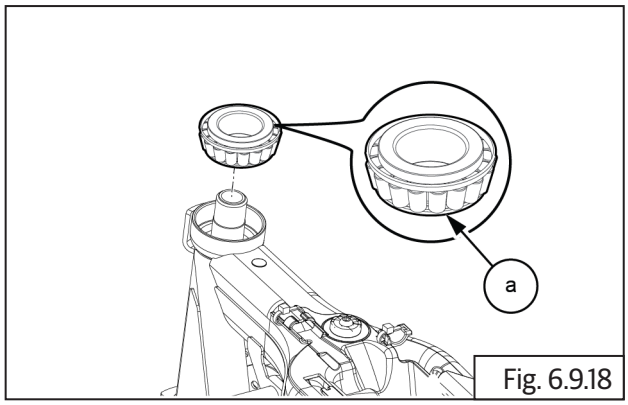

Fig. 6.9.18

- Inspect bearing **(a)** cups for rust, pitting and uneven wear. Replace if damaged.
- Inspect steering stem for any bends or damages. Replace if damaged.

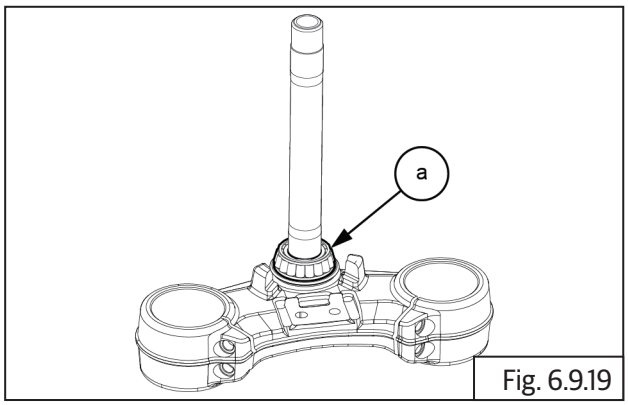

Fig. 6.9.19

6.9.7. Rear Shock Absorber

- Inspect rear shock absorber for damaged canister, spring coil breakage, oil leaks, weak or hard action of rear shock absorber. Replace if found.
- Inspect mounting hole rubber inserts for any tear or damage. Replace rear shock absorber.
- Inspect and replace rear shock absorber rod if it has any bends, cracks or rusting.

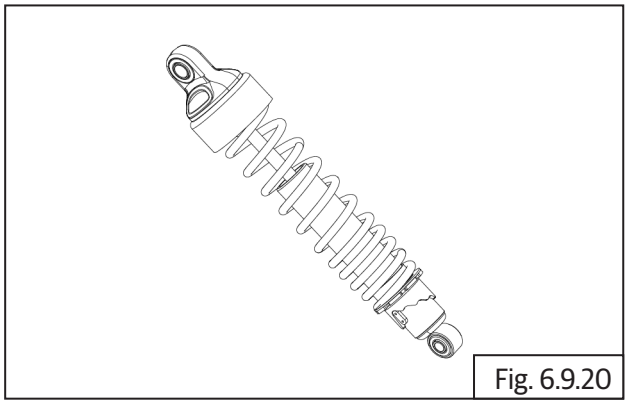
Fig. 6.9.20

6.9.8.Swingarm

- Inspect LHS and RHS Swingarm for any damages or bends.
- Inspect Swingarm in fully assembled condition in motorcycle for side play, sticky movement in working area and replace bearing sleeve and bearing if any of these conditions are present.
- Inspect if Swingarm end cup is worn-out or damaged.
- Inspect spindle for any wear-out.

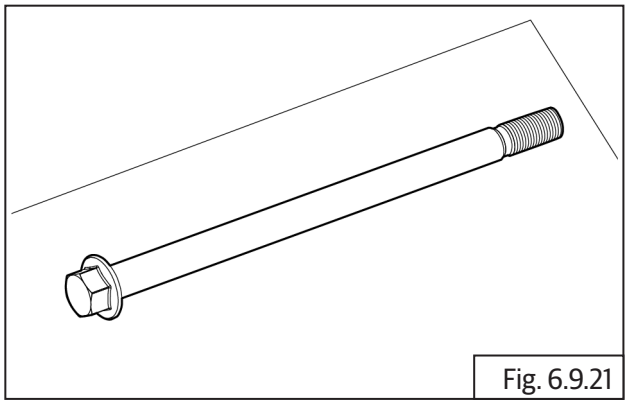
Fig. 6.9.21

6.9.9. Top Yoke

- Inspect top yoke for any cracks or damages in seating area. Replace if damaged.

Replace

- Replace oil seals, dust seals, washers, chain guides whenever removed from the front fork/Swingarm.
- Always fill up front fork with recommended oil from a new container. **DO NOT reuse the oil**.
- Refer Technical Specification & PMS chapters for quantity and replacement interval

Assembly

6.9.10. Swingarm

⚠ CAUTION

Ensure the motorcycle is upright on a firm and flat surface.

- Apply grease on the spacer before installing.
- Locate the spacer **(a)** into swingarm.

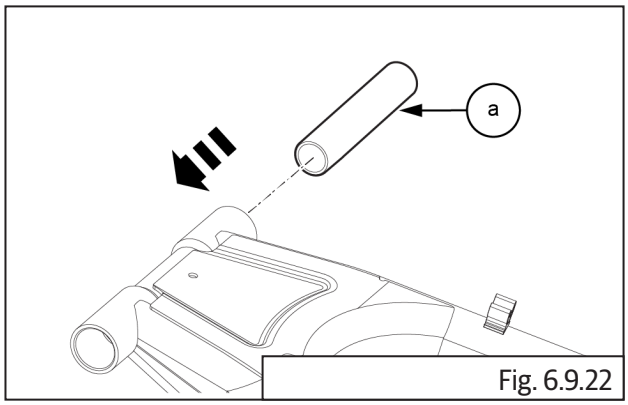

Fig. 6.9.22

	NLGI 2 / Mobil XHP 222

- Apply grease on the needle roller before installing.
- Using special tool locate and install needle roller bearing **(a)** into both end Swingarm.

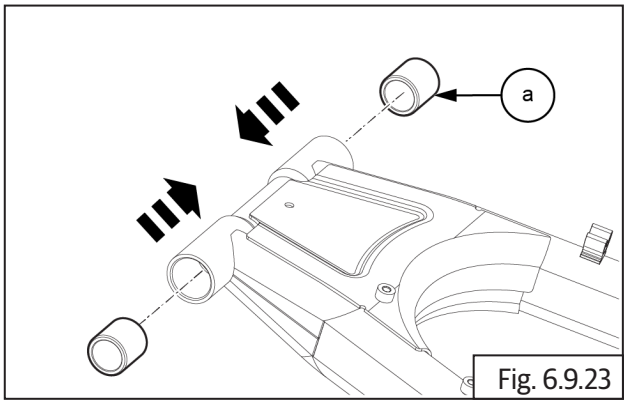

Fig. 6.9.23

	Part No: ST-30297/A Part Name: Swingarm NRB Installer

	NLGI 2 / Mobil XHP 222

- Apply grease on the sleeves before installing.
- Locate both bearing sleeves **(a)** into Swingarm .

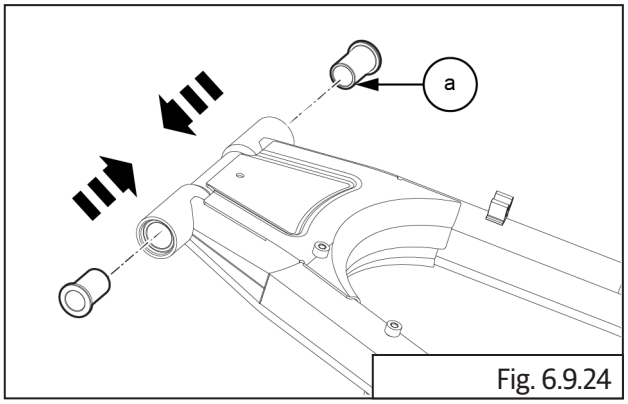

Fig. 6.9.24

	NLGI 2 / Mobil XHP 222

- Apply grease on the end cup before installing.
- Locate both end cup **(a)** into Swingarm .

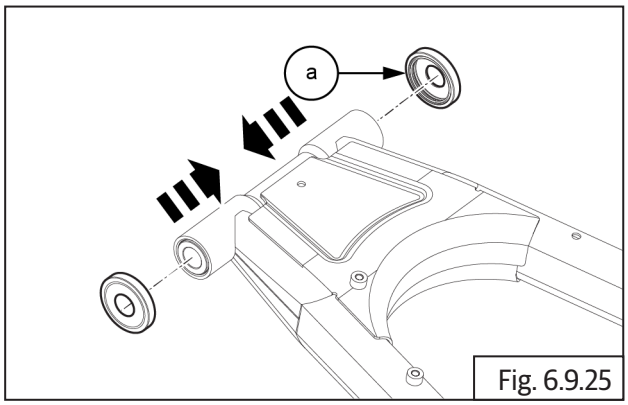

Fig. 6.9.25

	NLGI 2 / Mobil XHP 222

- Locate chain rubbing stripe **(a)** on Swingarm LHS.

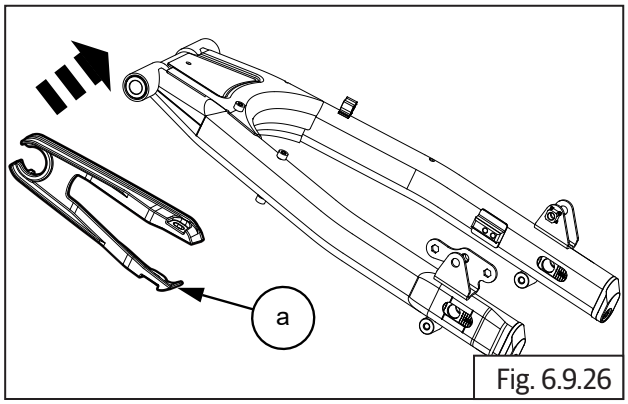

Fig. 6.9.26

- Locate and tighten Hex socket button bolt **(M6) (a)** on Swingarm LHS.

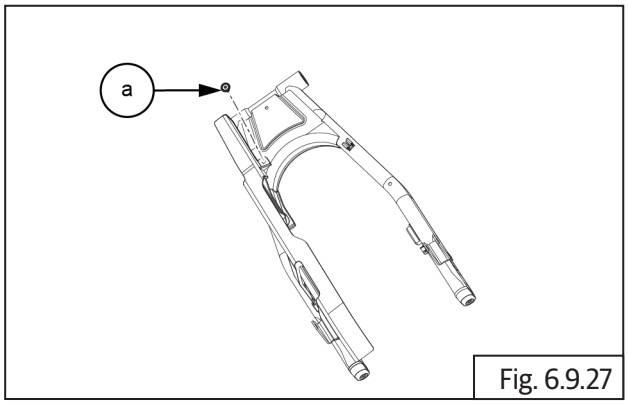

Fig. 6.9.27

	5 mm Allen Socket with Ratchet
	9- 12 Nm / 0.9 - 1.2 kgf-m

- Locate chain guard **(a)** on Swingarm RHS.

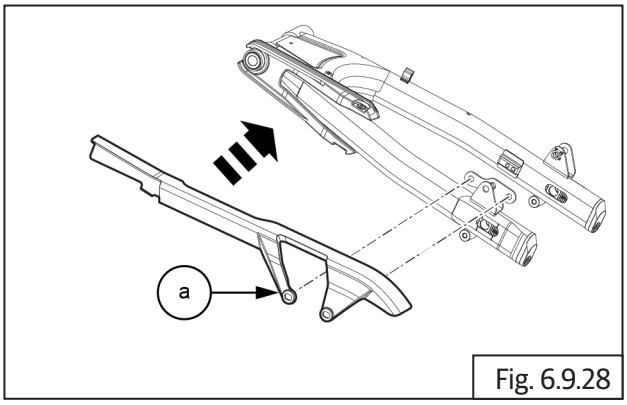

Fig. 6.9.28

- Locate and tighten 2 Nos. allen bolt **(a**) button bolt **(b)** and on Swingarm LHS.

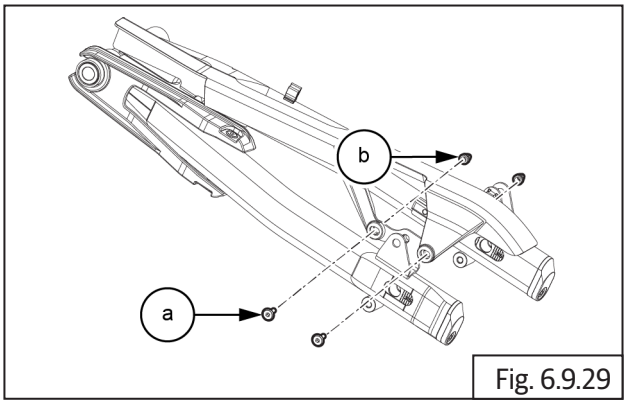

Fig. 6.9.29

	5 mm Allen Socket with Ratchet
	4- 6 Nm / 0.4 - 0.6 kgf-m

- Apply **0.5g** of grease to the top of the sleeve making sure the gap between the sleeve and the Swingarm is filled on both sides of the Swingarm.
- Provide suitable support below chassis frame, Locate Swingarm on chassis frame.

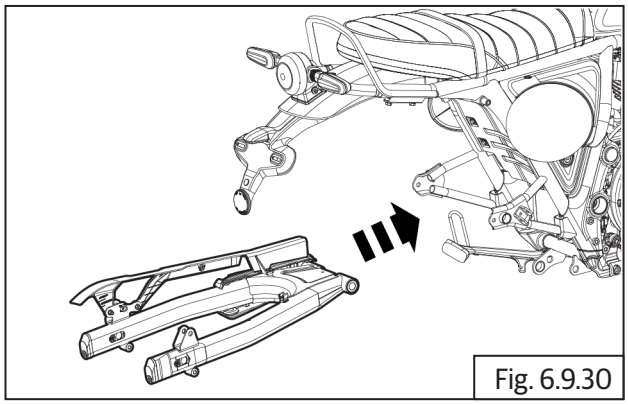

Fig. 6.9.30

	NLGI 2 / Mobil XHP 222

- Insert special tool **(a)** into slot in frame in RHS side, ensuring adjuster swingarm is located correctly and tighten into frame (anticlockwise direction).

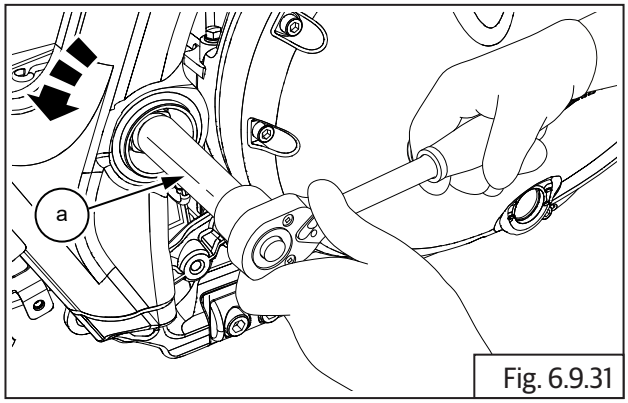

Fig. 6.9.31

SPL 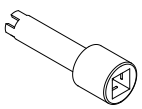	Part No: ST30269/a
	Part Name: Frame Adj. OD 21.5/ID18 mm - Swingarm
Torque	3 Nm/0.3 kgf-m

⚠ CAUTION
Adjuster has left hand threads. Turn anticlockwise to tighten.

- Remove special tool and insert spindle into swingarm completely.
- Apply **4g** of grease to the swingarm spindle
- Insert spindle bolt **(M16) (a)** in frame RH side and locate and tighten hex nut **(M16) (b),** spindle bearing seal **(c)** and thrust washer **(d)** on both end Swingarm. from LHS side.

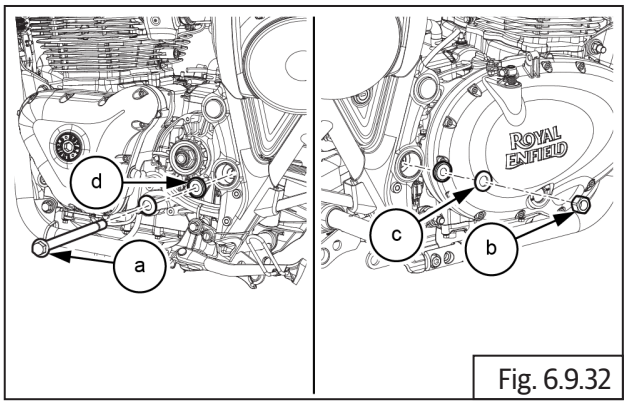

Fig. 6.9.32

	NLGI 2 / Mobil XHP 222

	22 mm Socket with Ratchet 24 mm Socket with Ratchet
	100 Nm / 10.00 kgf-m

- Locate cap **(a)** on LHS & RHS Swingarm spindle

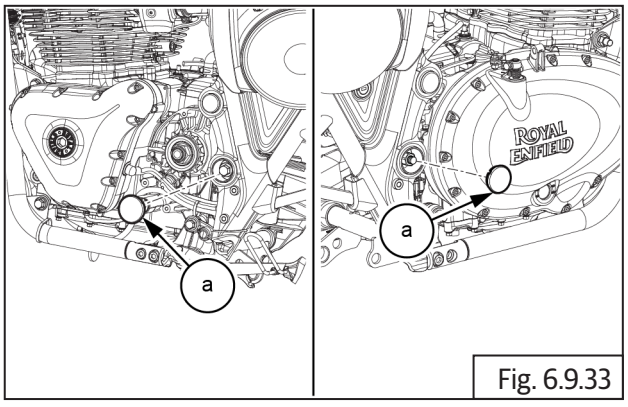

Fig. 6.9.33

- Assemble the Rear shock absorber LHS and RHS (Refer-------).
- Assemble the Rear wheel(Refer-------).

6.9.11.Rear Shock Absorber

⚠ CAUTION

Ensure motorcycle is supported suitably at the rear end after removing both shock absorbers to prevent motorcycle from tipping over and falling down.

- Locate rear LHS shock absorber **(a)** on Swingarm bracket.

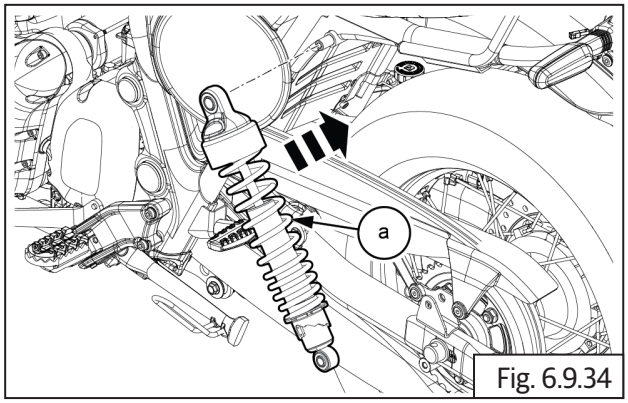

Fig. 6.9.34

- Loosen and remove hex head bolt **((M10) (a)** from rear LHS shock absorber top.

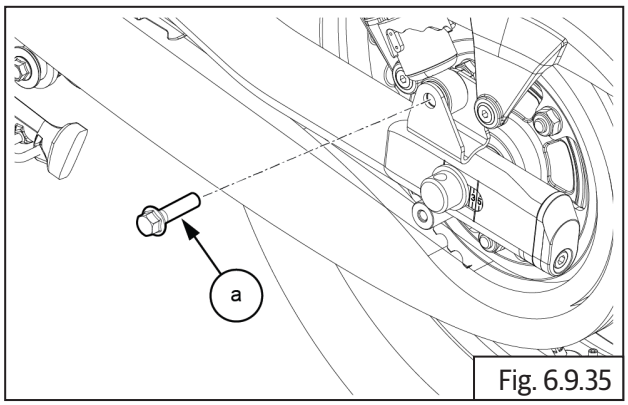

Fig. 6.9.35

	14 mm socket with Ratchet
	40 - 50 Nm / 4.0 - 5.0 kgf-m

- Locate and Tighten hex head bolt **(M10) (a)** with nut **(b)** on rear LHS shock absorber top.

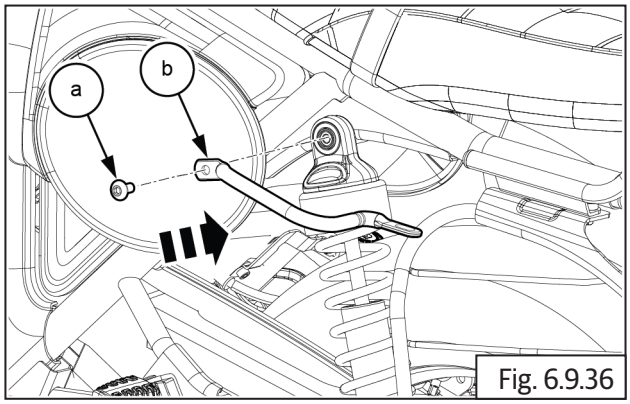

Fig. 6.9.36

	6 mm Allen Socket with Ratchet
	14- 22 Nm / 1.4 - 2.2 kgf-m

- Locate and tighten bolt **(M8) (a)** on the rear shock absorber bottom.

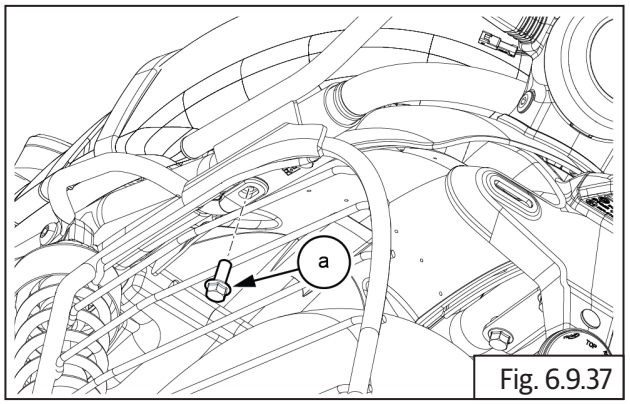

Fig. 6.9.37

	12 mm Socket with Ratchet
	34 Nm / 3.4 kgf-m

- Repeat the above process to remove rear RHS shock absorber.
- Make sure the motorcycle is stable and secure before performing any maintenance or repairs.

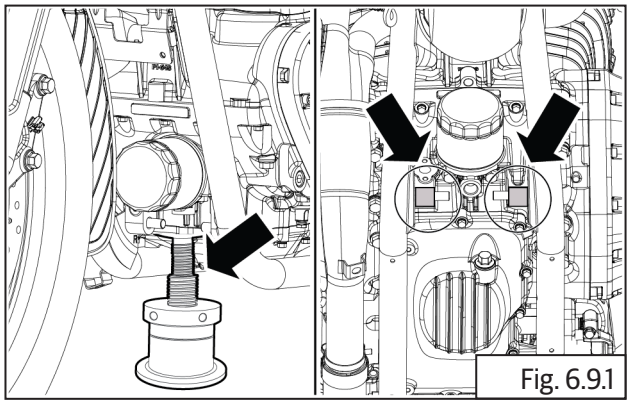

Fig. 6.9.1

- Carefully use the screw jack to lift the motorcycle until the front wheel is off the ground.
- Position the screw jack directly under the boss of the crank case.

⚠ CAUTION
Ensure the motorcycle is upright on a firm and flat surface.

6.9.12. Bottom Roller Bearing into Steering Stem

- Apply **0.5g** of grease to the lower headstock bearing.

	NLGI 2 / Mobil XHP 222

- Insert the dust seal and roller bearing **(a)**.

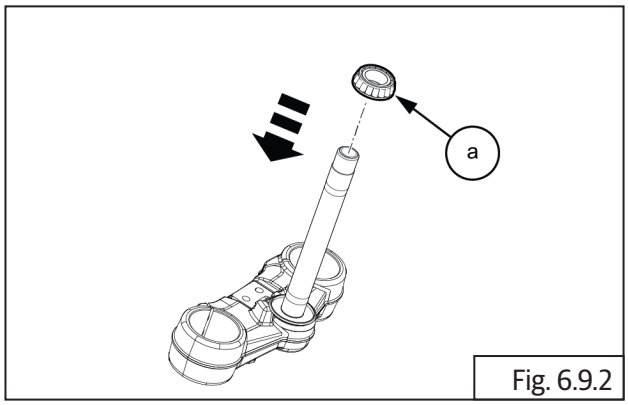

Fig. 6.9.2

- Assemble bearing with special tool **(a)**.

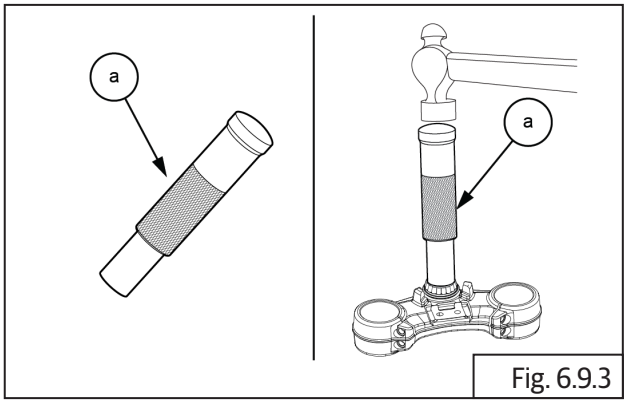

Fig. 6.9.3

SPL	Part No: ST-31893-a
	Part Name: T-Stem taper roller bearing installer

- Install the lower yoke with stem **(a)** into both fork assembly.

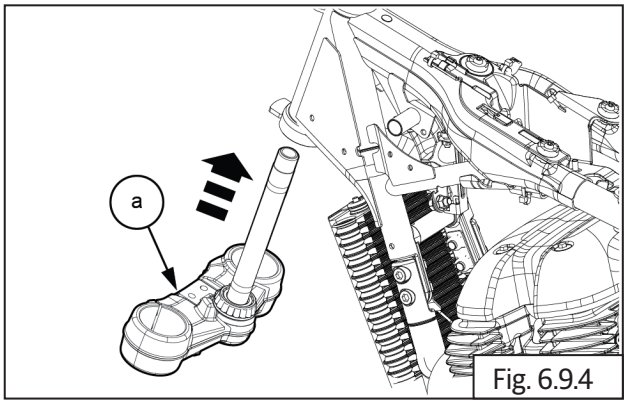

Fig. 6.9.4

6.9.13. Ball Bearing into Frame top and bottom Head Tube

- Locate bottom bearing outer race **(b)** and top bearing outer race **(a)** into frame headstock tube.

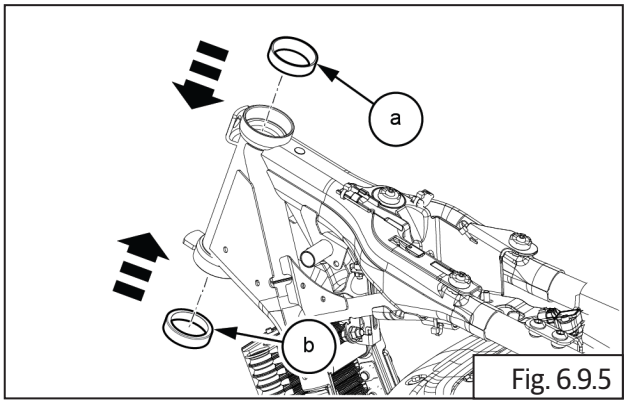

Fig. 6.9.5

- Use bearing race installer tool to install top and bottom bearing races into headstock.

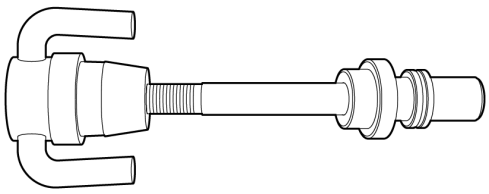

Fig. 6.9.6

SPL	Part No: ST-31890-a Part No: ST-31894-a
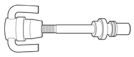	Part Name: Headstock bearing race installer Part Name: Common Screw Rod For Headstock Ball Race Installer

- Locate the race installer tool **(a)** into headstock top side.

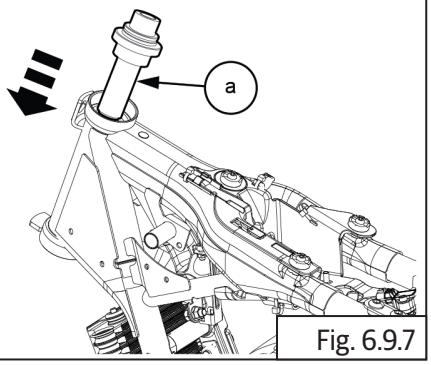

Fig. 6.9.7

SPL	Part No: ST-31890-a Part No: ST-31894-a
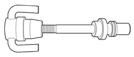	Part Name: Headstock bearing race installer Part Name: Common Screw Rod For Headstock Ball Race Installer

- Tighten the bottom nut **(a)** to clockwise direction

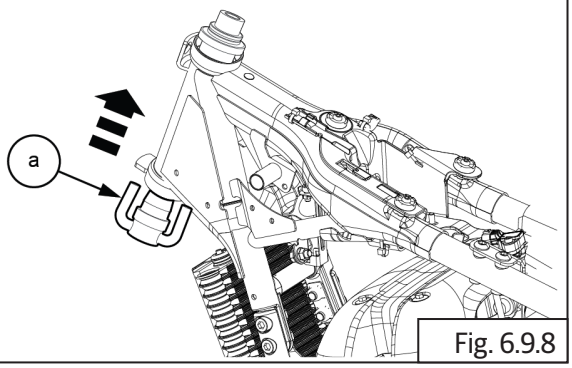

Fig. 6.9.8

SPL	Part No: ST-31890-a Part No: ST-31894-a
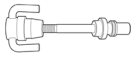	Part Name: Headstock bearing race installer Part Name: Common Screw Rod For Headstock Ball Race Installer

- Tighten tool head **(a)** using T rod till bearing race perfectly seat.

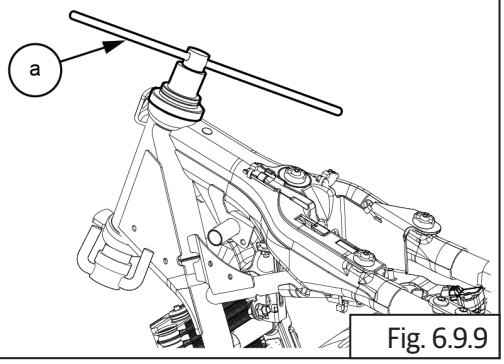

Fig. 6.9.9

SPL	Part No: ST-31890-a Part No: ST-31894-a
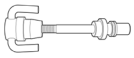	Part Name: Headstock bearing race installer Part Name: Common Screw Rod For Headstock Ball Race Installer

- Remove the installer tool **(a)** from the headstock.

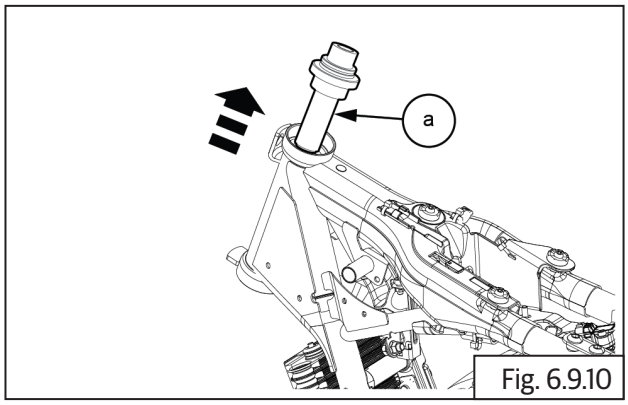

Fig. 6.9.10

SPL	Part No: ST-31890-a Part No: ST-31894-a
	Part Name: Headstock bearing race installer Part Name: Common Screw Rod For Headstock Ball Race Installer

6.9.14. Steering Stem into Frame Head Tube

- Gently insert steering stem **(a)** on frame head tube bottom.

⚠ CAUTION
Support steering stem from bottom. DO NOT allow the steering stem to drop out of frame head tube.

⚠ CAUTION
DO NOT tap or use force to remove steering stem from frame head tube..

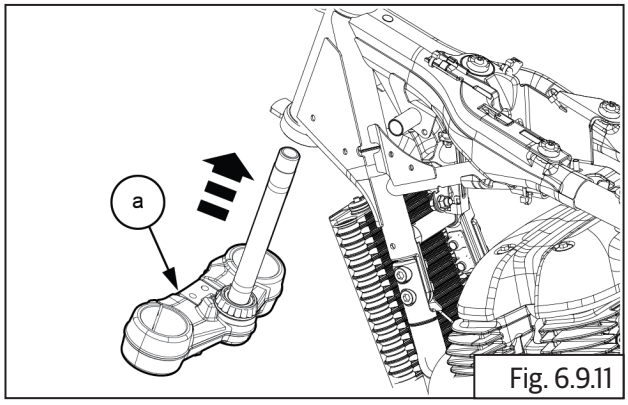

Fig. 6.9.11

- Apply **0.5g** of grease to the upper headstock bearing.
- Gently insert bearing **(a)** on frame top head tube top.

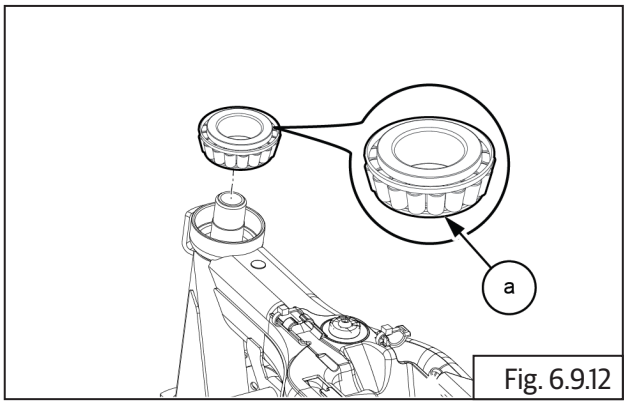

Fig. 6.9.12

	NLGI 2 / Mobil XHP 222

- Hold steering stem from bottom and locate seal headstock seal **(a)**.

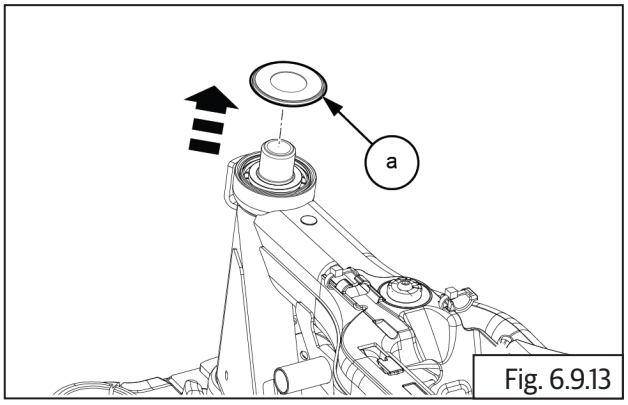

Fig. 6.9.13

- Hold steering stem from bottom and locate cover headstock cover **(a)**.

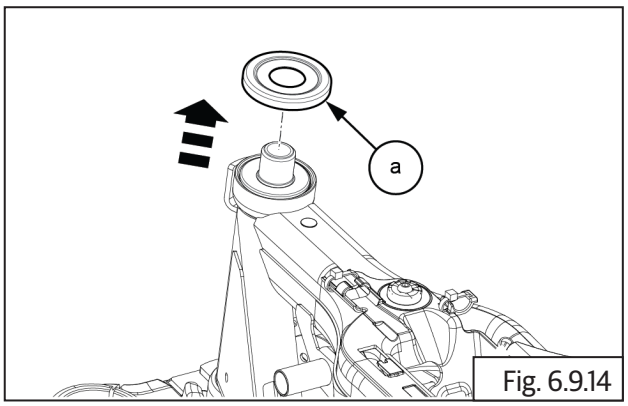

Fig. 6.9.14

⚠ CAUTION

Support steering stem from bottom. DO NOT allow the steering stem to drop out of frame head tube.

- Pre-fit the stem nut **(a)** over the steering stem,do not tighten the stem nut fully.
- Apply 35Nm torque then immediately loosen the stem nut **(a)**.
- Set the final torque of 8Nm using a tightening tool.

NOTE

- *After setting the torque to 8Nm, do not steer the bike.*

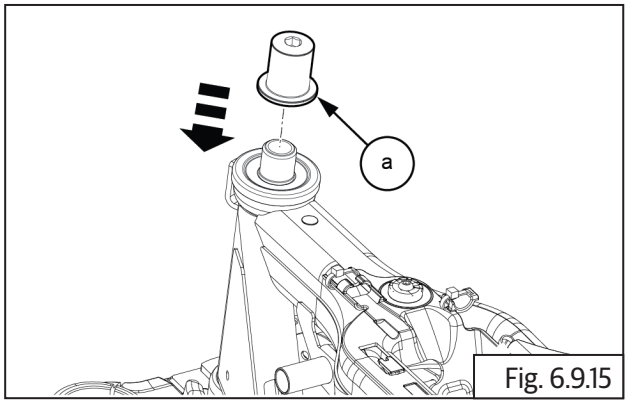

Fig. 6.9.15

	8 mm Allen socket with Ratchet

- Locate both fork assembly **(a)** on steering stem.

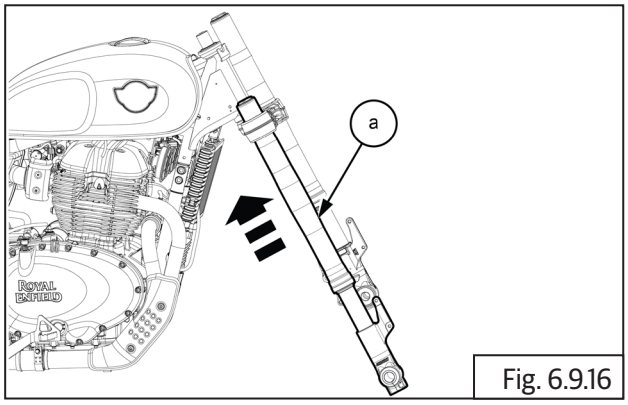

Fig. 6.9.16

- Locate and tighten 4 Nos.cap bolts **(M8) (a)** into RHS ower yoke.

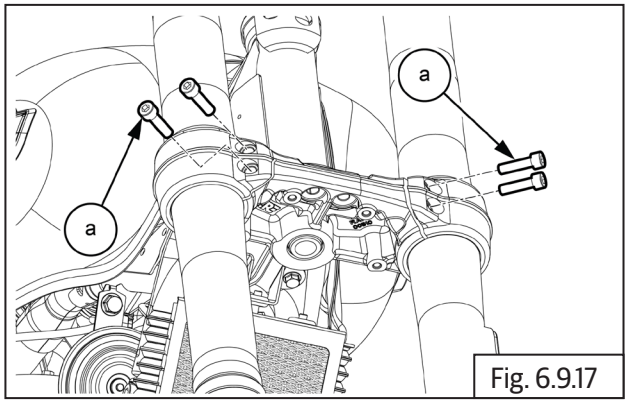

Fig. 6.9.17

	6 mm Allen Socket with Ratchet
	23- 27 Nm / 2.3 - 2.7 kgf-m

Check the following

- Check the free movement of steering stem from left to right.
- Check axial play of steering stem at center, extreme left and right positions.
- Check lateral play of steering stem at center, extreme left and right positions.
- Tighten or loosen stem nut to ensure no axial or lateral movement is present and the steering movement is smooth.

⚠ CAUTION

DO NOT over tighten the nut. Over/under torquing will lead to improper adjustment of steering stem.

Check for smooth turning in left and right directions and tighten just sufficiently.

vertical distance of front fork

NOTE
• *After assembly the fork check vertical distance between fork cap to top edge of top yoke.*

NOTE
• *300mm "Pull-Through" is measured from the yoke lower center face to the top of the fork bolt*

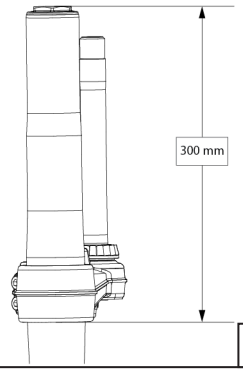

Fig. 6.9.18

NOTE
• *Overall free length (LHS) from bottom of T- stem and wheel spindle is* **516.5 ± 1**.
• *Manually adjust to match the length LHS before inserting the wheel spindle.*

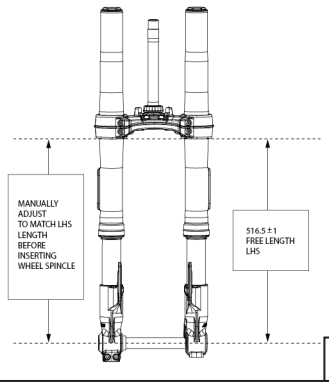

Fig. 6.9.19

- Install the Upper Yoke.(Refer----------)
- Install the Handlebar.(Refer----------)
- Install the Aggregates of Handlebar.(Refer----------)
- Install the Instrument cluster from top yoke.(Refer----------)
- Connect instrument cluster wiring connector.(Refer----------)
- Connect ignition switch connector.(Refer----------)
- Install the Trafficators.(Refer----------)
- Install the Headlamp assembly and housing.(Refer----------)
- Install the Front number plate.(Refer----------)
- Install the Front mudguard.(Refer----------)
- Wheel speed sensor on the fork end RH.(Refer----------)
- Wheel caliper on fork end RH. Support calipersuitably.(Refer----------)
- Release brake hose and wheel speed sensor wires from the clips.(Refer----------)
- Install the Front wheel.(Refer----------)
- Install the Fuel tank.(Refer----------)

6.9.15. Rear Suspension Setting

- Rest the motorcycle on center stand.
- Ensure the tyre pressure is at recommended specification.

Tyre pressure	
Solo	
Front tyre	32 psi
Rear tyre	36 psi
With Pillion	
Front tyre	32 psi
Rear tyre	42 psi

Tyre pressure for USA	
Solo	
Front tyre	32 psi/2.24 kg/cm2
Rear tyre	36 psi/2.53 kg/cm2
With Pillion	
Front tyre	32 psi/2.24 kg/cm2
Rear tyre	42 psi/2.95 kg/cm2

NOTE
• Ensure adjuster are clear of all dirt and debris before adjusting, if they have dirt or debris please clean it suitably before adjusting

- Ensure adjuster are clear of all dirt and debris before adjusting, if they have dirt or debris please clean it suitably before adjusting.
- The adjuster is a 5 step adjuster and it is kept at first notch position.
- Adjust shock preload by rotating the adjuster clockwise using C spanner to increase the preload.

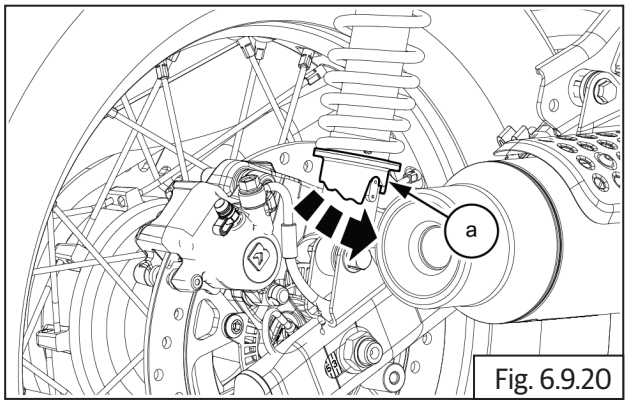

Fig. 6.9.20

	Rear suspension adjuster spanner/ C spanner
	Extension tube

- . Adjust shock preload by rotating anti-clockwise using C spanner to decrease preload (to make it to first notch position).

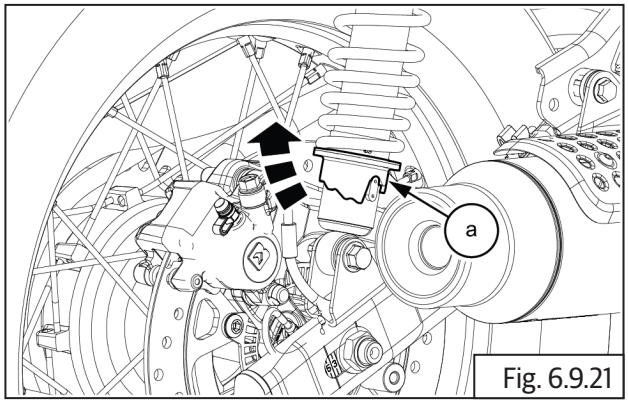

Fig. 6.9.21

	Rear suspension adjuster spanner/ C spanner
	Extension tube

⚠ CAUTION
DO NOT use any additional tools for this purpose other than 5mm allen key.

NOTE
• Make the same adjustments on both sides, uneven adjustment may lead to discomfort to the rider.

6.9.16. Troubleshooting

Symptom	Possible Cause	Diagnosis	How to Fix	Recommended Specification
1. Front Fork/Steering Stem Related				
Riding is unstable	Tyre seating on rims is improper.	Tyre bead is uneven at the rim surface.	Remove tyre and reassemble correctly.	
	Wheel rims are out of trueness.	Wheel rims are bent/have excessive run-out.	Remove tyre and true the wheel rim correctly.	
	Wheel rims have a crack/heavy damage.	Wheel rims have been cracked/damaged due to impact.	Replace with Royal Enfield genuine wheel rims.	
	Spokes are broken.	One/several spokes are broken.	Replace spokes and correct wheel trueness.	
	Wheels have excessive axial/side play.	Wheel bearings are worn-out	Remove bearing and replace	
	Hubs front/rear are cracked/damaged	Wheel hubs are damaged due to impact.	Replace with Royal Enfield genuine hubs.	
	Fork main tube movement in fork end is sticky.	Fork main tube is bent.	Dismantle fork legs, check main tube for straightness and replace main tubes.	
		Fork end tubes are damaged.	Dismantle fork legs, check fork ends inside for excessive wear-out and replace.	
	Steering stem movement is not smooth.	Control cables/wiring harness is not routed properly.	Route the control cables/ wiring harness correctly and strap to frame.	
		Steering stem nut is excessively tightened.	Adjust the steering stem nut correctly.	
		Steering stem bearings rollers have sticky movement/is rusted/bearing is damaged/uneven seating.	Dismantle steering stem and replace bearings.	
	Steering stem is bent.	Steering stem is bent.	Replace steering stem.	

Symptom	Possible Cause	Diagnosis	How to Fix	Recommended Specification
Vehicle is pulling to one side	Tyre pressures are less/more than recommended.	Front and rear tyre pressures are under/over inflated.	Ensure correct tyre pressures.	**Solo:** Front tyre: 32 psi Rear tyre: 36 psi.
				With Pillion: Front tyre: 32 psi Rear Tyre: 42 psi.
				For USA
				Solo: Front tyre: 32 psi /2.24 kg/cm2. Rear tyre: 36 psi /2.53 kg/cm2.
				With Pillion: Front tyre: 32 psi /2.24 kg/cm2. Rear Tyre: 42 psi /2.95 kg/cm2.
	Wheels alignment is not proper.	Front and rear wheels are not aligned.	Align front and rear wheels correctly.	
	Steering movement is hard.	Steering stem nut is excessively tightened.	Adjust steering stem nut correctly.	
		Steering stem bearings rollers have sticky movement/are rusted/ bearing is damaged/uneven seating.	Dismantle steering stem and replace bearings.	
	Vehicle met with an accident.	Fork main tube is bent.	Dismantle fork legs, check main tube for straightness and replace main tubes.	
		Fork end tubes are damaged.	Dismantle fork legs, check fork ends inside for excessive wear-out and replace.	
		Steering stem is bent.	Replace steering stem	
		Main frame is bent.	Check main frame for impact/bends and replace.	

Symptom	Possible Cause	Diagnosis	How to Fix	Recommended Specification
2. REAR SHOCK ABSORBER/SWINGARM RELATED				
Rear suspension is noisy	Rear shock absorbers bushes are worn-out/ damaged.	Rear shock absorbers have excessive radial/axial play on top/bottom mounting bolts due to bush damage.	Replace both rear shock absorbers as a set.	
	Rear shock absorbers are misaligned.	Top/bottom mounting locations of shock absorbers are misaligned.	Check top and bottom mounting points for any misalignment. Replace swingarm if it is bent.	
	Rear swingarm bushes are defective.	Rear swingarm bushes are rusted/jammed.	Replace swingarm bushes and axle.	
Rear suspension is too soft	Rear shock absorber spring is preloaded at Minimum position.	Rear shock absorber spring preload is adjusted to soft position.	Adjust rear shock absorber spring preload evenly on both LHS and RHS for the desired riding comfort and road conditions.	
	Rear shock absorbers are weak.	Rear shock absorbers have oil leakage/springs are very soft.	Replace both rear shock absorbers as a set.	
	Rear swingarm bushes are defective.	Rear swingarm bushes are worn-out.	Replace rear swingarm bushes and axle.	
Rear suspension is too hard	Rear shock absorbers spring is preloaded at Maximum position.	Rear shock absorbers spring preload is adjusted to maximum hard position.	Adjust rear shock absorber spring preload evenly on both LHS and RHS for desired riding comfort and road conditions.	
	Rear shock absorbers are defective.	Rear shock absorbers compression is very hard.	Replace both rear shock absorbers as a set.	
	Rear swingarm bushes are defective.	Rear swingarm bushes are rusted/jammed .	Replace rear swingarm bushes and axle.	
Rear tyre worn-out on one side	Rear shock absorbers spring preload adjustment is mismatching between LHS and RHS shock absorbers.	Spring preload adjustments are not at same position on LHS & RHS shock absorbers.	Adjust rear shock absorber spring preload evenly on both LHS and RHS for desired riding comfort and road conditions.	
	Rear wheel bearings are defective.	Rear wheel bearings are worn-out/have excessive side play.	Replace rear wheel bearings.	
	Rear swingarm is defective.	Rear swingarm is bent (LHS & RHS arms not at same level).	Replace rear swingarm assembly.	

Symptom	Possible Cause	Diagnosis	How to Fix	Recommended Specification
Vehicle skids when rear brake is applied	Wheels alignment is not proper.	Front and rear wheels are not aligned.	Align front and rear wheels.	
	Rear wheel bearings are defective.	Rear wheel bearings are worn-out/have excessive side play.	Replace rear wheel bearings.	
	Rear shock absorbers spring preload adjustment is mismatching between LHS and RHS shock absorbers.	Spring preload adjustments are not at same position on LHS & RHS shock absorbers.	Adjust shock absorber spring preload evenly on both LHS and RHS for desired riding comfort and road conditions.	
	Rear swingarm bushes are defective.	Rear swingarm bushes are worn-out.	Replace rear swingarm bushes and axle.	
	Rear swingarm is defective/rubbing on frame on one side.	Rear swingarm is bent (LHS & RHS arms are not at same level).	Replace rear swingarm assembly.	
Rear swingarm has excessive side play	Rear swingarm mounting to frame is loose.	Rear swingarm axle nut is loose.	Check and correct rear swingarm alignment to frame and tighten swingarm mountings.	
	Rear swingarm bushes are defective	Rear swingarm bushes are rusted/jammed.	Replace swingarm bushes and axle.	
3. TYRES RELATED				
Rear tyre is worn-out on one side.	Improper wheel alignment.	Rear wheel is misaligned with respect to front wheel.	Check and correct wheel alignment.	
Tyre wearing out unevenly/ vehicle is unstable/ wobbling	Internal defect/poor quality tyre.	Tyres found to have bulges/ cracks in side wall. Threads are separated from the tyre.	Replace with Royal Enfield recommended tyres.	**Front tyre:** Make: MRF NYLOREX-F Size: 100/90-19 M/C 57H **Rear tyre:** Make: MRF NYLOREX-X Size: 140/80R17 M/C 69H
	Tyre seating on rims is improper.	Tyre bead is uneven at the rim surface.	Remove tyre and reassemble correctly.	
	Wheel rims have a defect.	Wheel rims are bent/have excessive run-out.	Remove tyre. Carry out proper wheel truing.	
	Rims have excessive side play.	Wheel bearings are worn-out/have excessive play.	Remove and replace wheel bearings.	
4. WHEEL RIMS RELATED				

Symptom	Possible Cause	Diagnosis	How to Fix	Recommended Specification
Vehicle is unstable/ wobbling	Tyre seating on rims is improper.	Tyre bead is uneven at the rim surface.	Remove tyre and reassemble correctly.	
	Wheel rims are out of trueness.	Wheel rims are bent/have excessive run-out.	Remove tyre and true the wheel rim correctly.	
	Wheel rims have a crack/heavy damage.	Wheel rims are cracked/ damaged due to impact.	Replace with Royal Enfield genuine wheel rims.	
	Spokes are broken	One/several spokes are broken.	Replace spokes and correct wheel trueness.	
	Wheels have excessive axial/side play.	Wheel bearings are worn-out.	Remove bearing and replace.	
	Hubs front/rear are cracked/damaged.	Wheel hubs are damaged due to impact.	Replace with Royal Enfield genuine hubs.	

SHOWA - USD SUSPENSION DISASSEMBLY AND ASSEMBLY PROCEDURE

CONTENTS **PAGE**

6.10. USD -Suspension..... 695

Dismantling..... 695

6.10.1. Front fork LH 695

6.10.2. Front fork RH 699

Inspection 703

6.10.3. Front Fork Leg 703

Assembly 704

6.10.4. Front Fork RH 704

6.10.5. Front Fork LH..... 708

6.10. USD - Suspension

Dismantling

6.10.1. Front Fork LH

- Loosen and remove the fork bolt **(a)** using special tool.

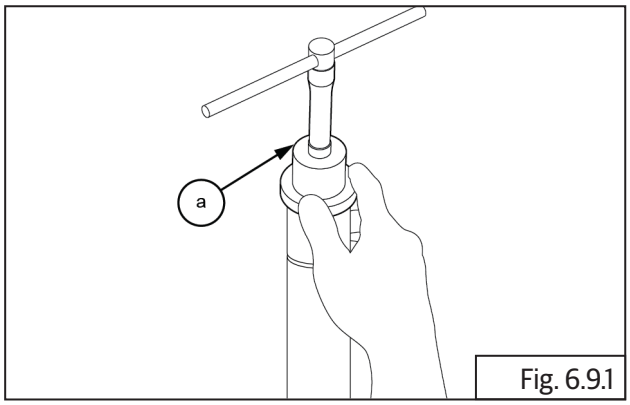

Fig. 6.9.1

SPL	Part No: ST31884/A
	Part Name: USD Fork Nut Remover And Installer

- Gently lift the fork bolt.
- Hold and loosen the bottom lock nut and remove fork bolt **(a)** .

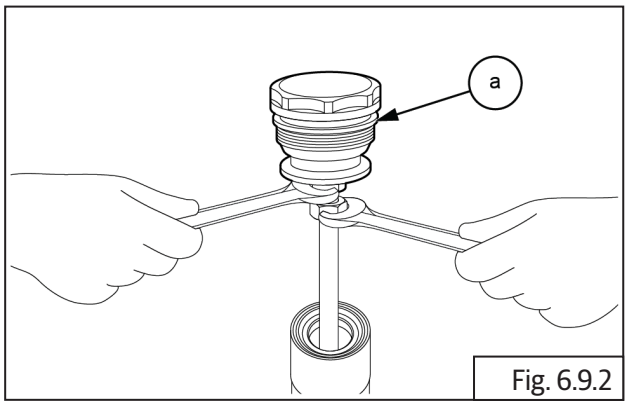

Fig. 6.9.2

	17 mm Double end spanner 14 mm Double end spanner

- Gently invert fork assembly into a clean tray to collect the fork oil coming out of main tube.
- Hold fork inverted and pump main tube into fork end several times till oil in the fork end drains out completely.

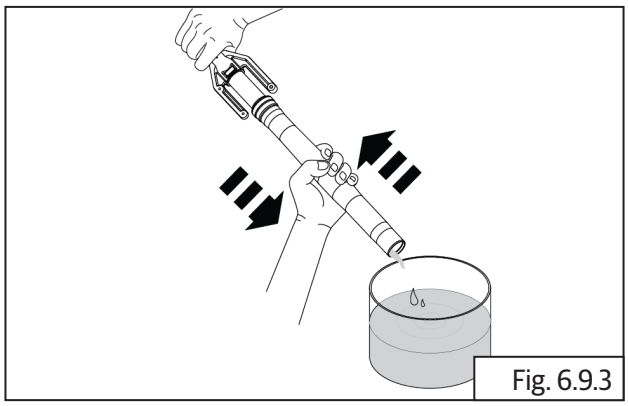
Fig. 6.9.3

- Remove the dust seal **(a)** from fork.

⚠ CAUTION

When using sharp edge tools, be careful not to damage the seals and fork tube surface..

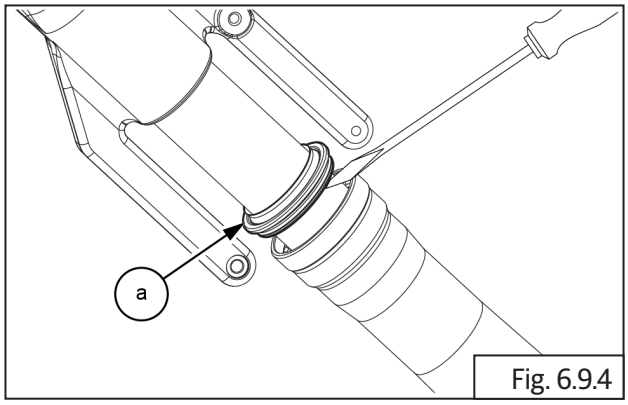

Fig. 6.9.4

	Flat head screw driver

- Remove the Oil seal stopper **(a)** from fork.

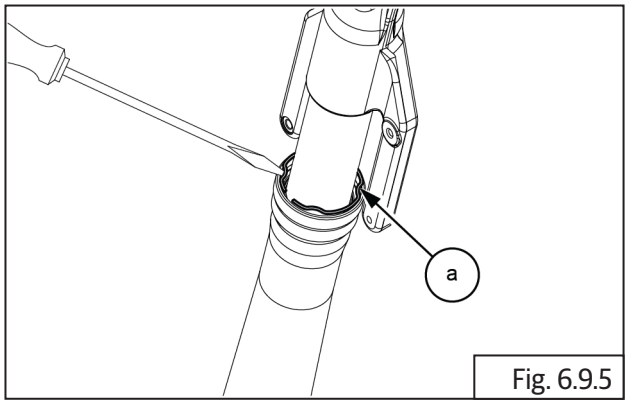

Fig. 6.9.5

	Small flate screw driver

- Hold bottom tube firmly and move outer tube quickly up and down to remove slide pipe **(a)**.

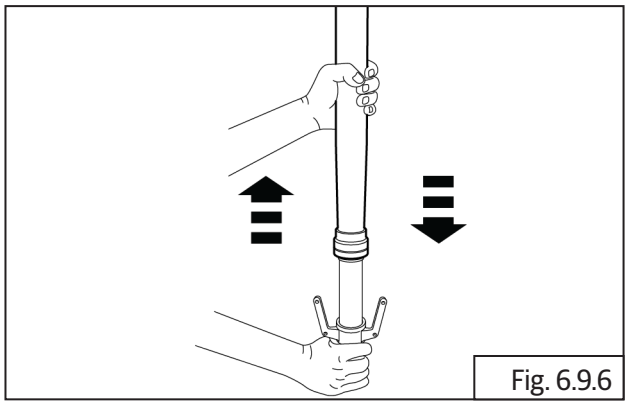
Fig. 6.9.6

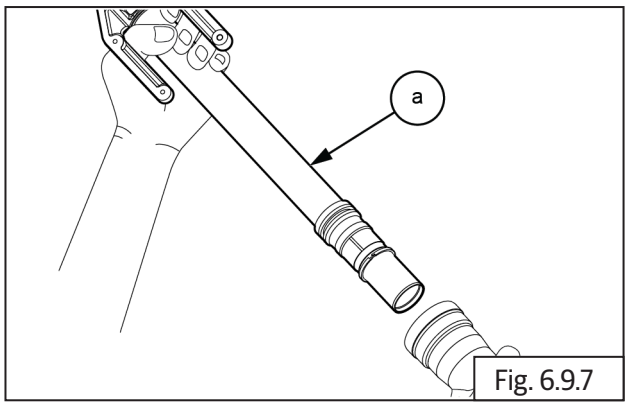

Fig. 6.9.7

- Remove the slide bush **(a)** from slide pipe.

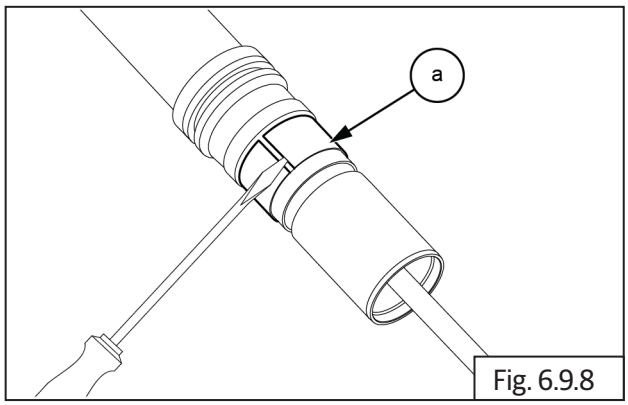

Fig. 6.9.8

	Flat head screw driver

- Remove the Guide bush **(a)** from slide pipe.

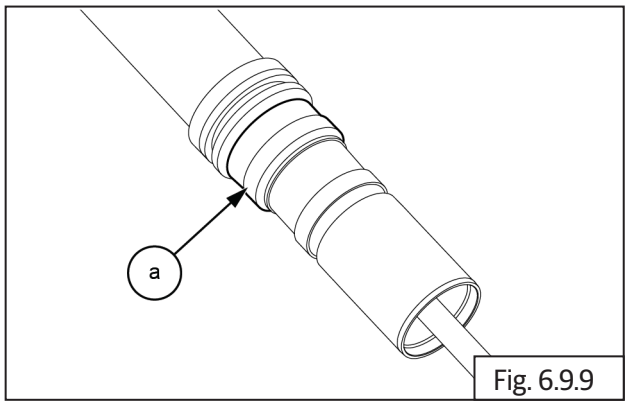

Fig. 6.9.9

- Remove the Seal spacer **(a)** from slide pipe.

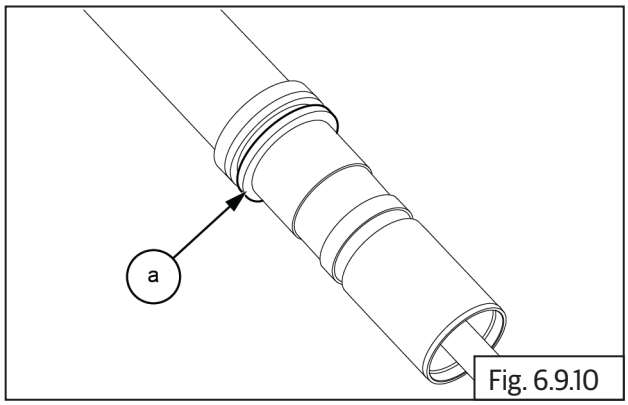

Fig. 6.9.10

- Remove the Oil seal **(a)** from slide pipe.

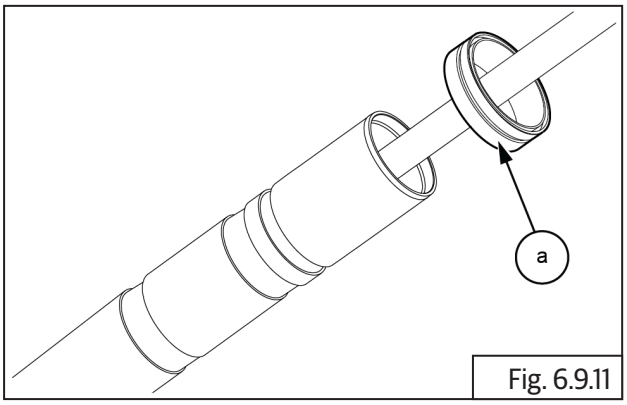

Fig. 6.9.11

- Remove the Oil seal stopper **(a)** from slide pipe.

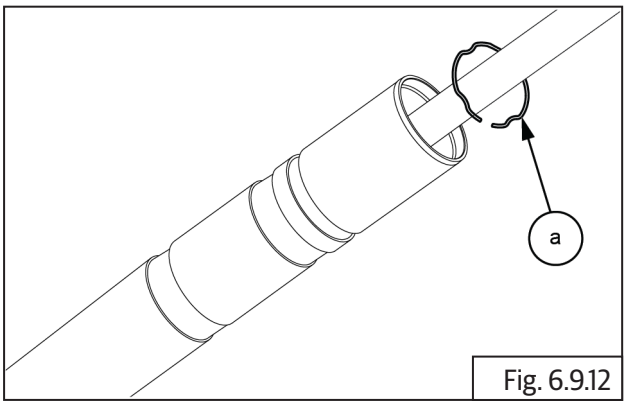

Fig. 6.9.12

- Remove the dust seal **(a)** from the fork.

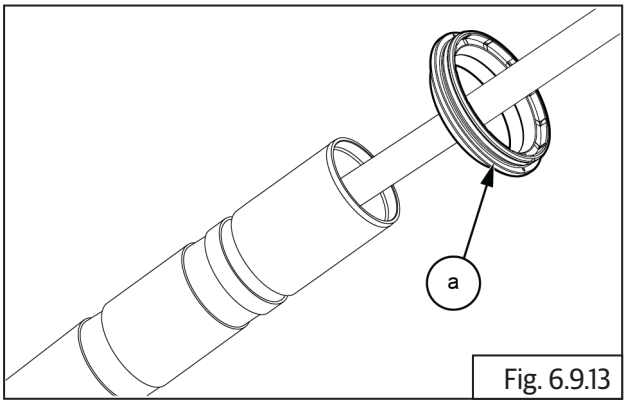

Fig. 6.9.13

- Insert the gauge **(a)** on the fork top

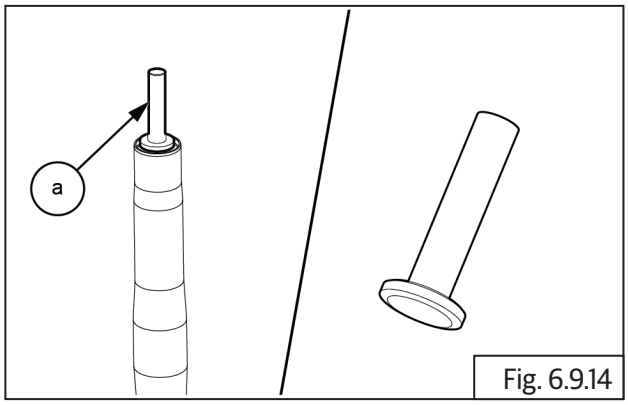

Fig. 6.9.14

SPL 	Part No: ST31895/A
	Part Name: Swing Arm NRB Bearing Remover Tool

- Locate the fork assembly with gauge **(a)** into USD Stopper Ring Removal Jig.
- Tighten the top bolt to push down stopper until stopper ring comes out.

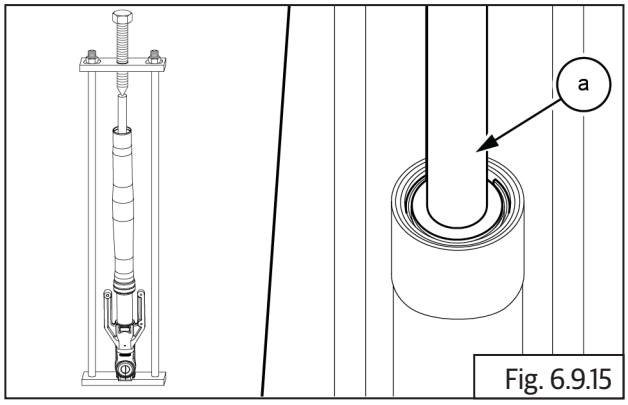

Fig. 6.9.15

SPL 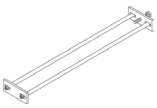	Part No: ST31886/B
	Part Name: USD Stopper Ring Removal Jig

	24mm Double end Spanner 17mm Double end Spanner

- Remove the stopper ring **(a)** from fork tube using the special tool **(b)**.

⚠ CAUTION

Take care when removing the stopper ring from the fork tube.

Use special tools to avoid damaging the stopper ring curve.

Ensure that the stopper ring is removed safely and without damage.

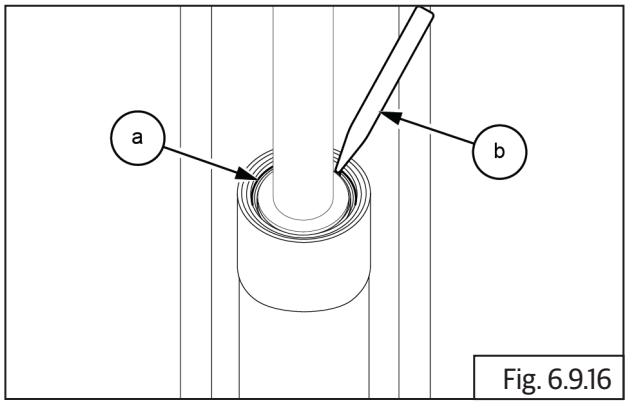

Fig. 6.9.16

SPL	Part No: ST31887/A Part Name: USD Stopper Ring Remover

- Remove fork assembly **(a)** from special tool jig.

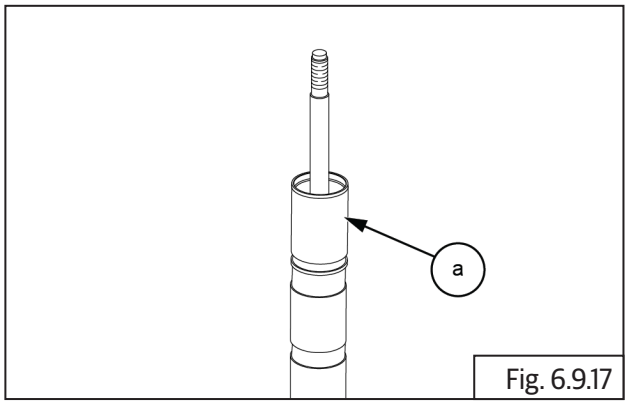

Fig. 6.9.17

- Insert the piston removal tool **(a).**
- Install the adptor on the piston rod **(b)** and tighten the nut.
- Slide up and down to remove piston from fork assembly.

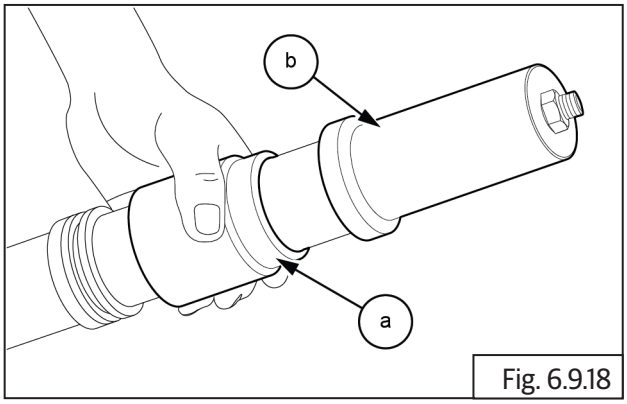

Fig. 6.9.18

SPL 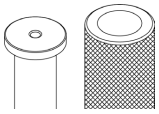	Part No: ST-31888-a Part Name: USD Piston Comp. Remover

	14mm Double end Spanner

- Remove the spring **(a)** from fork body.

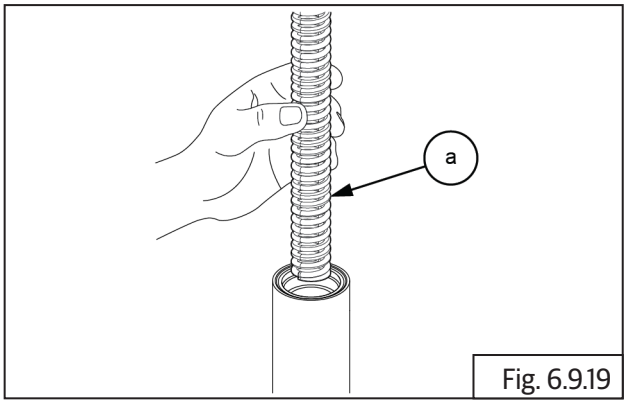

Fig. 6.9.19

- Remove the special tool **(a)** from piston assembly.

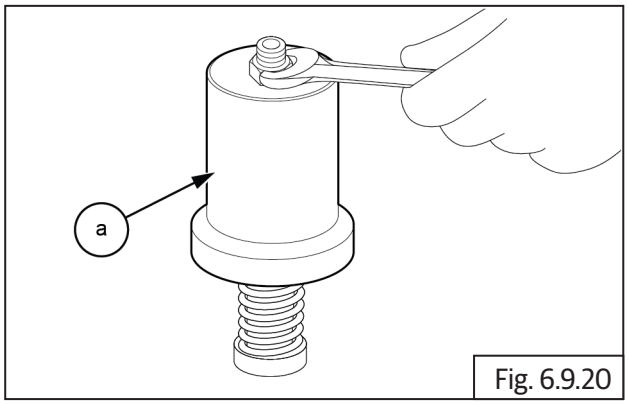

Fig. 6.9.20

	14mm Double end Spanner.

- Remove the piston rod **(a)** spring **(b)** and washer **(c)**

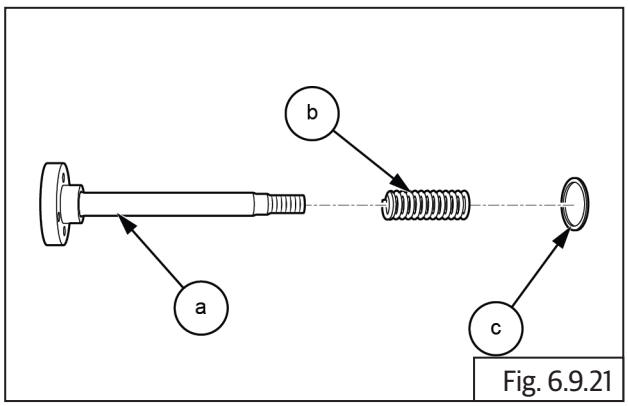

Fig. 6.9.21

6.10.2. Front Fork RH

- Loosen and remove the fork bolt **(a)** using special tool.

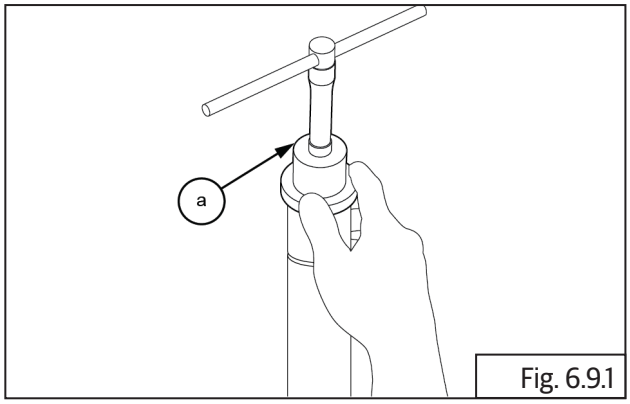

Fig. 6.9.1

SPL 	Part No: ST-31884-a
	Part Name: USD Fork Nut Remover And Installer

- Gently lift the fork bolt.
- Hold and loosen the bottom lock nut and remove fork bolt **(a)** .

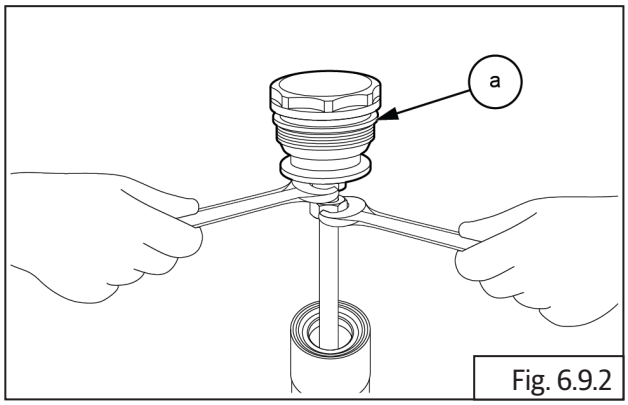

Fig. 6.9.2

	17 mm Double end spanner 14 mm Double end spanner

- Gently invert fork assembly into a clean tray to collect the fork oil coming out of main tube.
- Hold fork **(a)** inverted and pump main tube into fork end several times till oil in the fork end drains out completely.

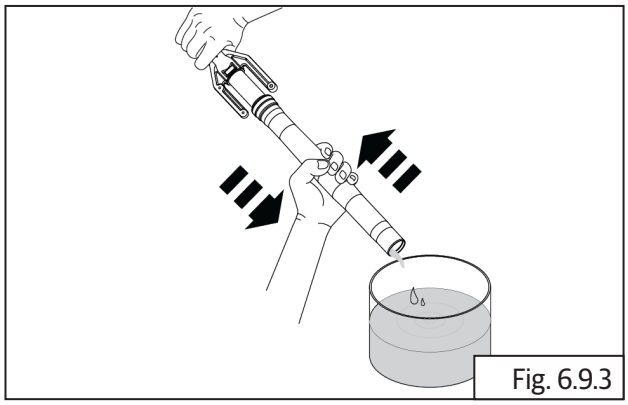

Fig. 6.9.3

- Remove the dust seal **(a)** from the fork.

⚠ CAUTION

When using sharp edge tools, be careful not to damage the seals and fork tube surface..

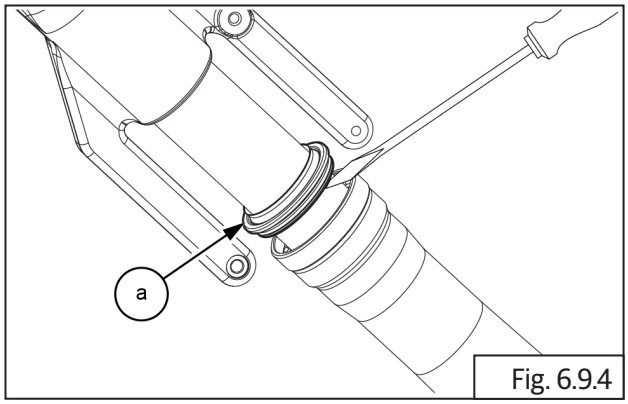

Fig. 6.9.4

	Flat head screw driver

- Remove the Oil seal stopper **(a)** from fork.

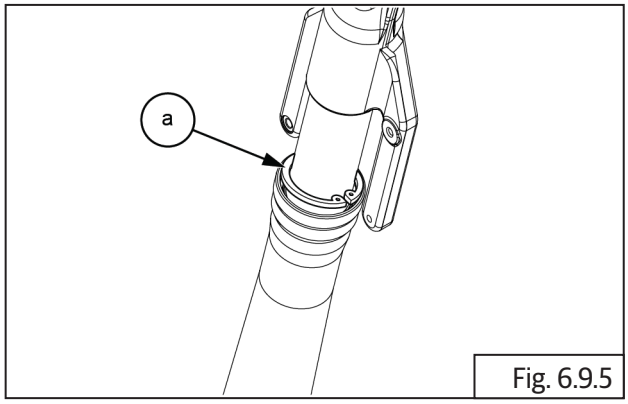

Fig. 6.9.5

	circlip plier

- Hold bottom tube firmly and move outer tube quickly up and down to remove slide pipe **(a)**.

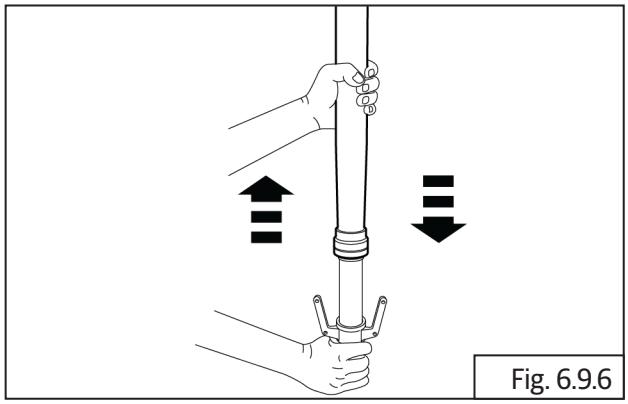

Fig. 6.9.6

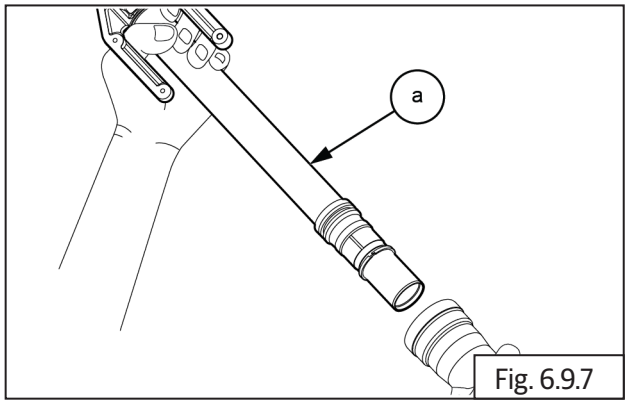

Fig. 6.9.7

- Remove the slide bush **(a)** from slide pipe.

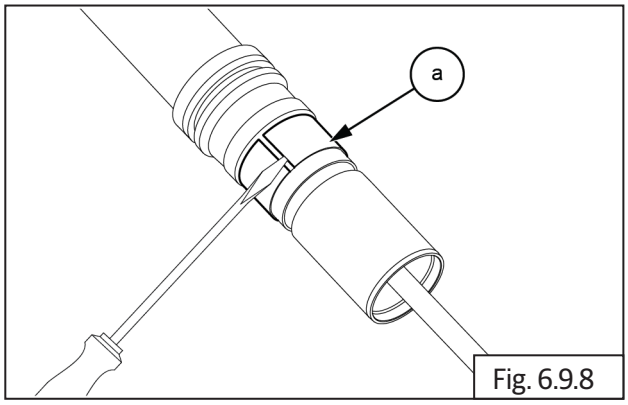

Fig. 6.9.8

- Remove the Guide bush **(a)** from slide pipe.

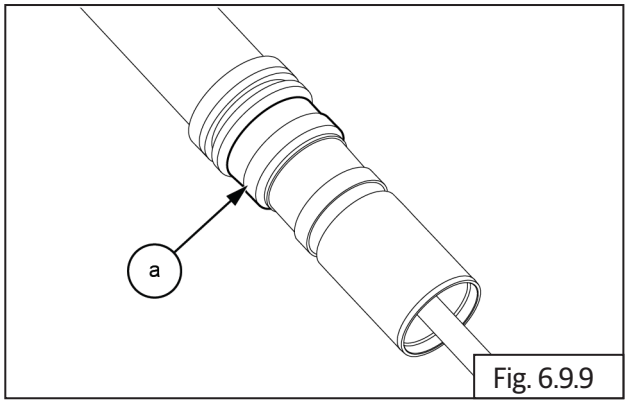

Fig. 6.9.9

- Remove the Seal spacer **(a)** from slide pipe.

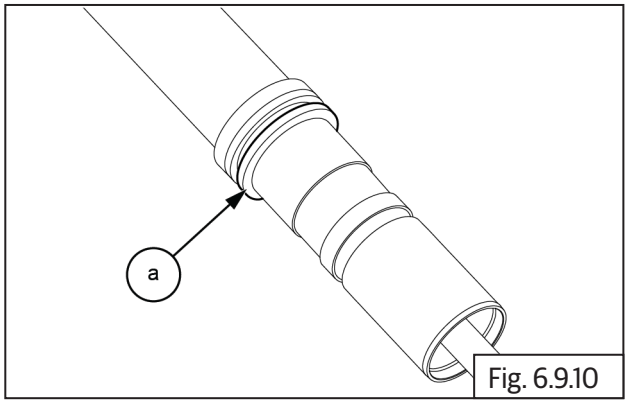

Fig. 6.9.10

- Remove the Oil seal **(a)** from slide pipe.

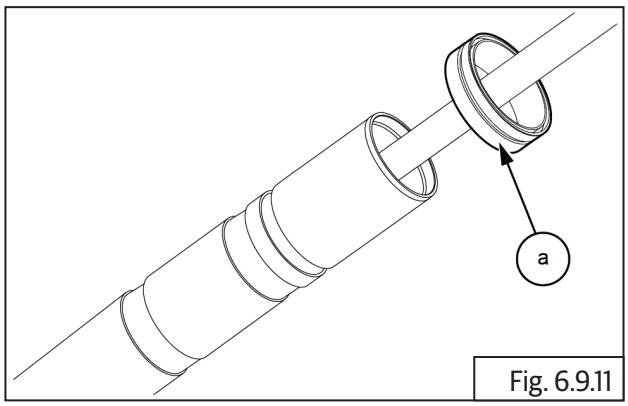

Fig. 6.9.11

- Remove the snap ring. **(a)** from slide pipe.

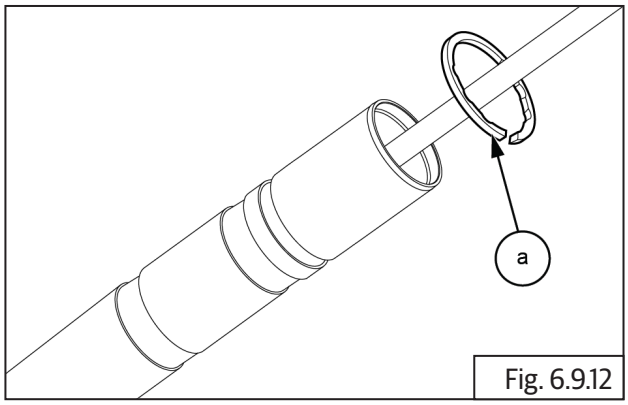

Fig. 6.9.12

- Remove the dust seal **(a)** from the fork.

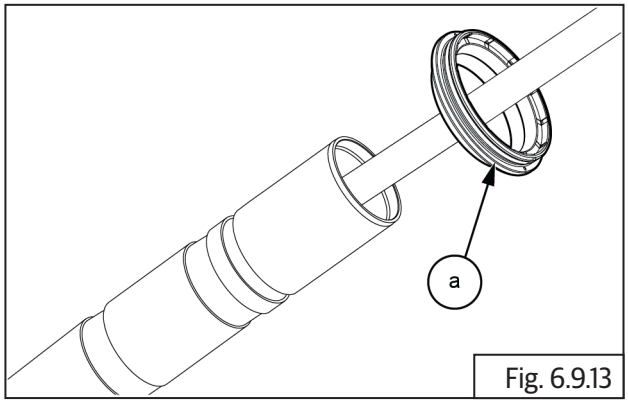

Fig. 6.9.13

- Insert the gauge **(a)** on the fork top

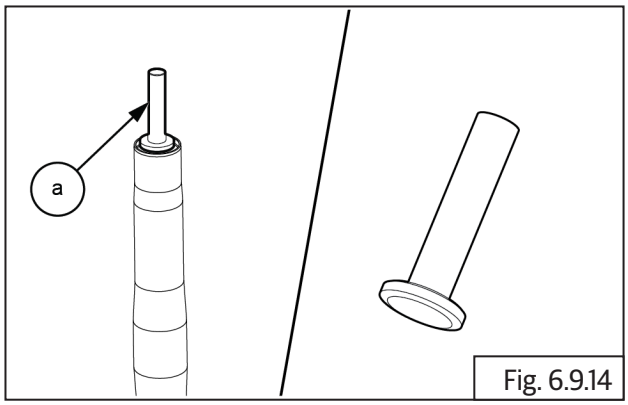

Fig. 6.9.14

SPL 	Part No: ST31895/A
	Part Name: Swing Arm NRB Bearing Remover Tool

- Locate the fork assembly with gauge **(a)** into USD Stopper Ring Removal Jig.
- Tighten the top bolt to push down stopper until stopper ring comes out.

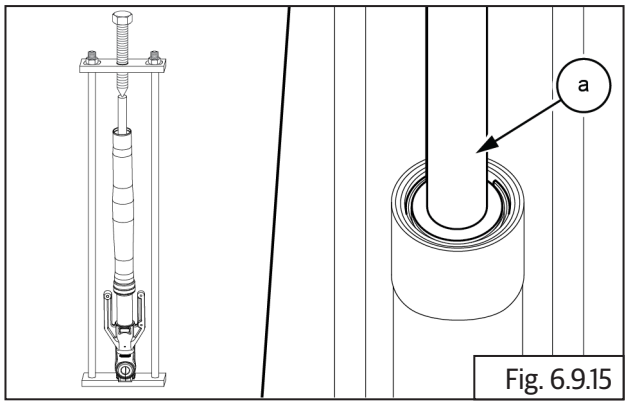

Fig. 6.9.15

SPL 	Part No: ST31886/A
	Part Name: USD Stopper Ring Removal Jig

	24mm Double end Spanner 17mm Double end Spanner

- Remove the stopper ring **(a)** from fork tube using the special tool **(b)**.

⚠ CAUTION

Take care when removing the stopper ring from the fork tube.

Use special tools to avoid damaging the stopper ring curve.

Ensure that the stopper ring is removed safely and without damage.

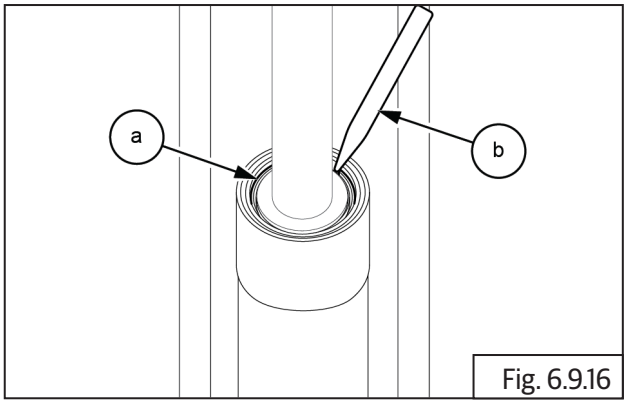

Fig. 6.9.16

SPL	Part No: ST31887/A
	Part Name: USD Stopper Ring Remover

- Remove fork assembly **(a)** from special tool jig.

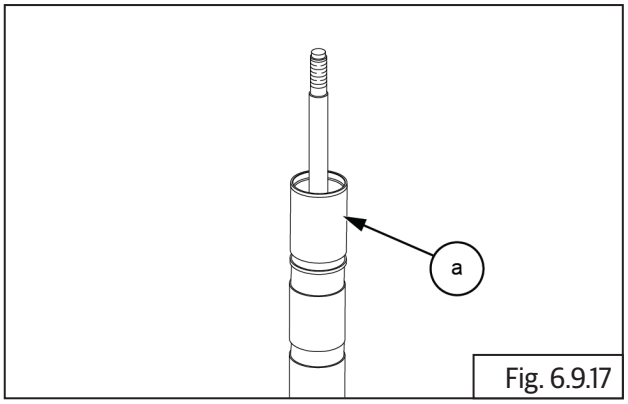

Fig. 6.9.17

- Insert the piston removal tool **(a).**
- Install the adptor on the piston rod **(b)** and tighten the nut.
- Slide up and down to remove piston from fork assembly.

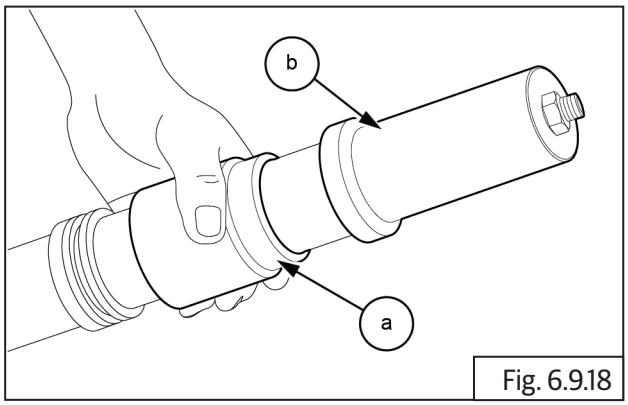

Fig. 6.9.18

	Part No: ST31888/A
	Part Name: USD Piston Comp. Remover

	14mm Double end Spanner

- Remove the spring **(a)** from fork body.

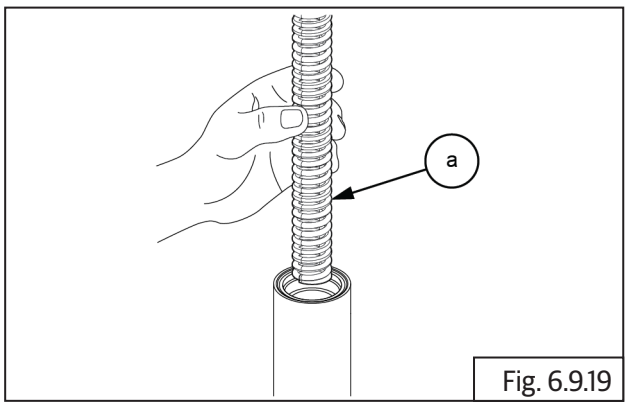

Fig. 6.9.19

- Remove the spring **(a)** from fork body.

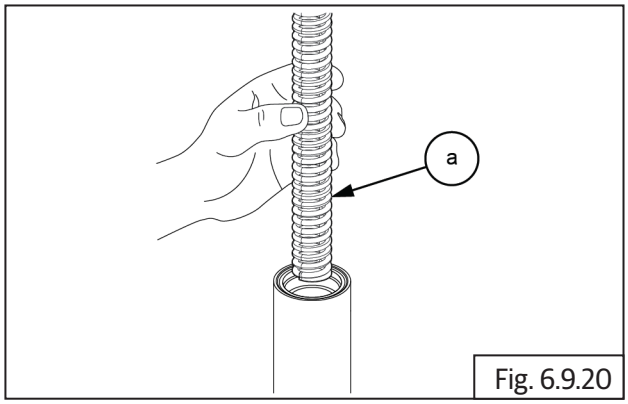

Fig. 6.9.20

- Remove the piston assembly **(a)** from adaptor.

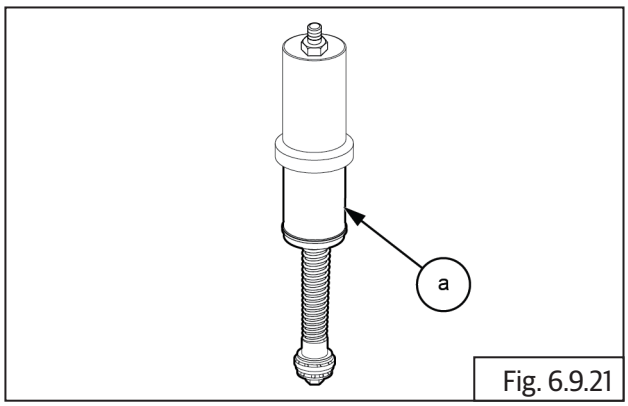

Fig. 6.9.21

	14mm Double end Spanner.

Inspection

6.10.3. Front Fork Leg

- Inspect main tube for any scratches are bend if found replace the main tube.

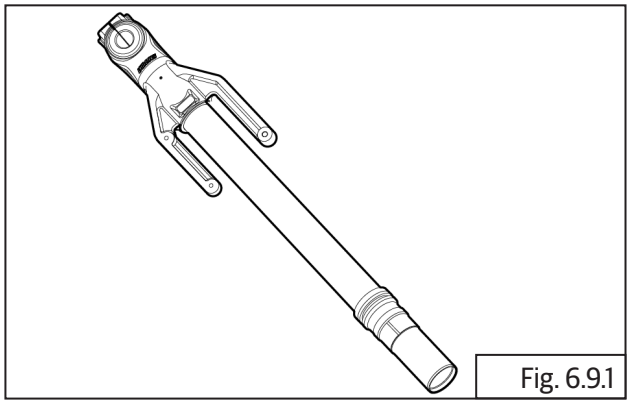
Fig. 6.9.1

- Inspect main tubes for any bends using dial gauge.
- Inspect fork ends inner side for any damages and scratches. Replace if found damaged.
- Inspect fork ends for any cracks- especially at oil seated area. Replace if cracked.
- Inspect piston for any damages/scratches. Replace if damaged.

Assembly

6.10.4. Front Fork RH

NOTE
• *Apply grease to seal and bush press-fit area of outer tube and oil seal lip part.*

- Locate and install the dust seal **(a)** into slide pipe.

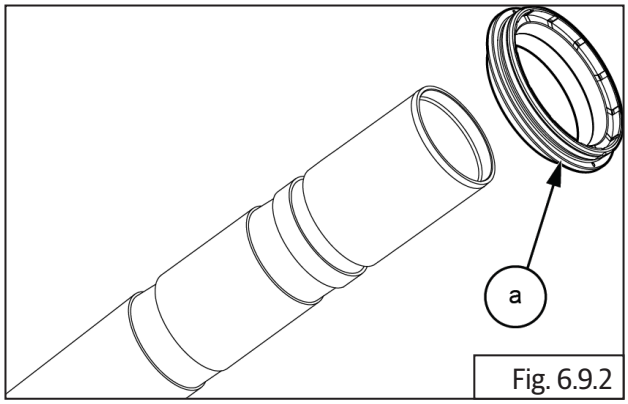

Fig. 6.9.2

- Locate and install the snap ring **(a)** into slide pipe.

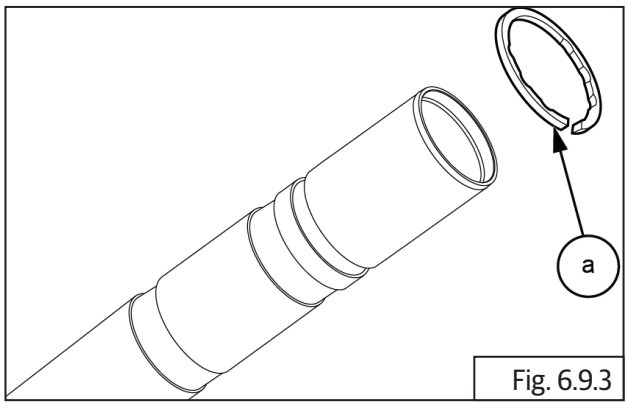

Fig. 6.9.3

NOTE
• Oil seal has a direction. Insert engraved side (surface) to axle holder side.

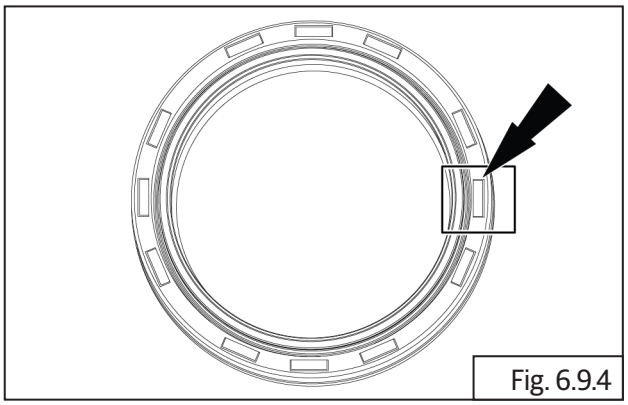
Fig. 6.9.4

- Locate and install the oil seal **(a)** into slide pipe.

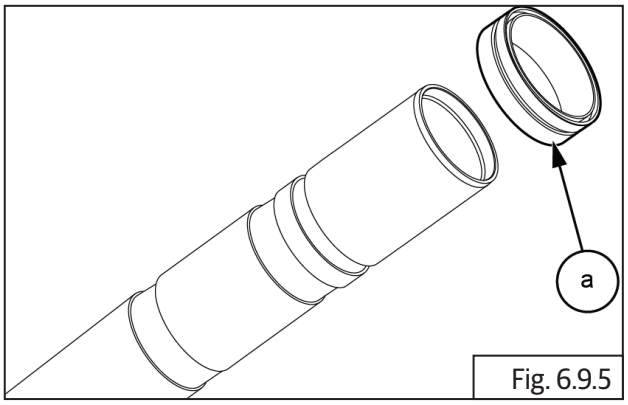

Fig. 6.9.5

- Locate and install the seal spacer **(a)** into slide pipe.

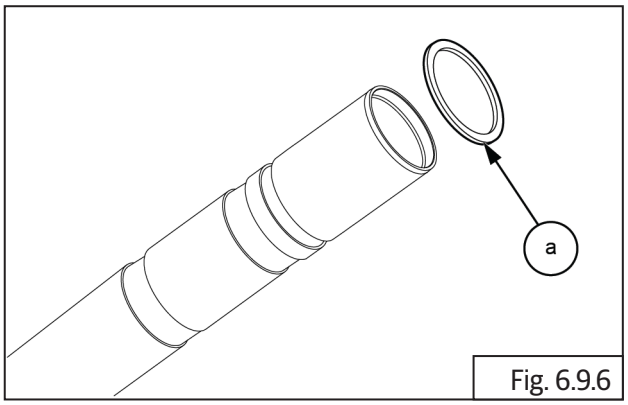

Fig. 6.9.6

- Locate and install the Guide bush **(a)** into slide pipe.

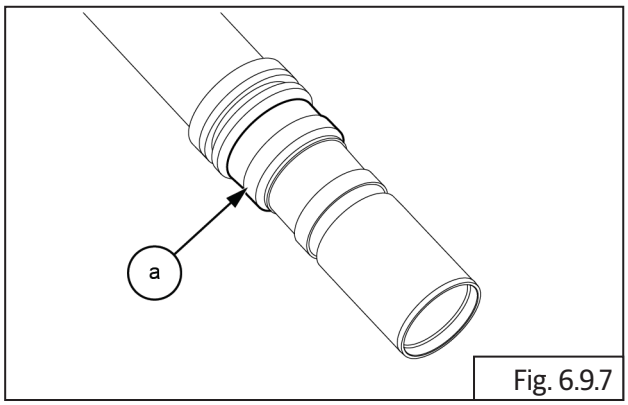

Fig. 6.9.7

- Locate and install the slide bush **(a)** into slide pipe.

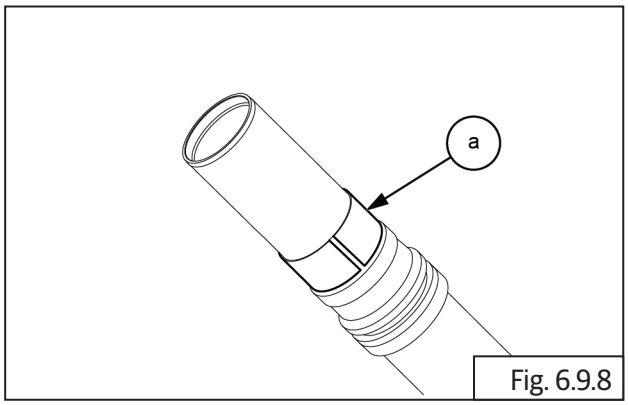

Fig. 6.9.8

- Apply grease thinly to the outer side (**a & b**) of guide bush oil seal.

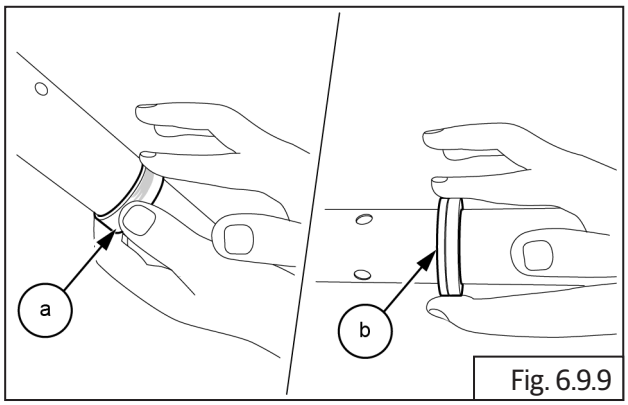

Fig. 6.9.9

- Install the slide pipe **(a)** into fork body.

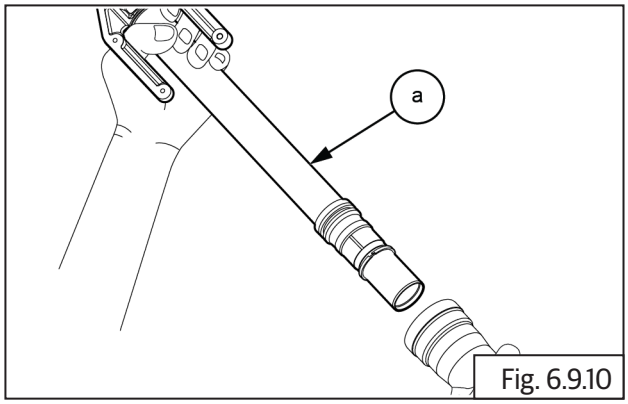

Fig. 6.9.10

- Locate and install the oil seal **(a)** into fork body using special tool.

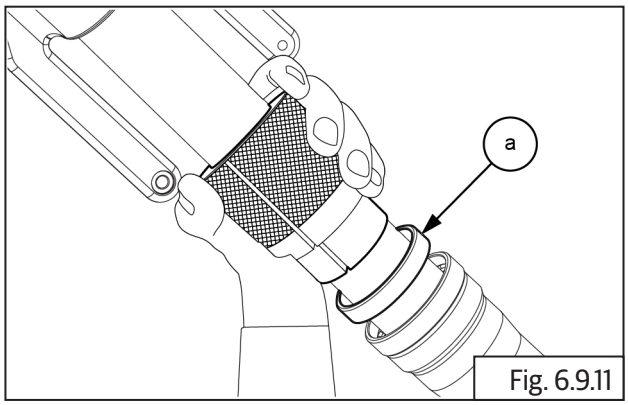

Fig. 6.9.11

SPL 	Part No: ST31885/A Part Name: USD Dust Seal And Oil Seal Installer

- Install the snap ring **(a)** into fork body.

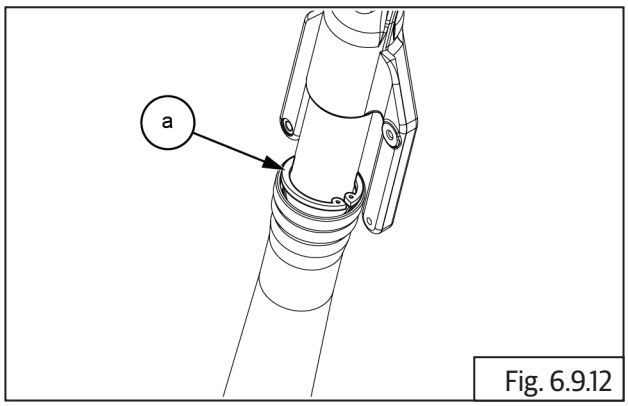

Fig. 6.9.12

	circlip plier

- Press the dust seal **(a)** into fork body using special tool.

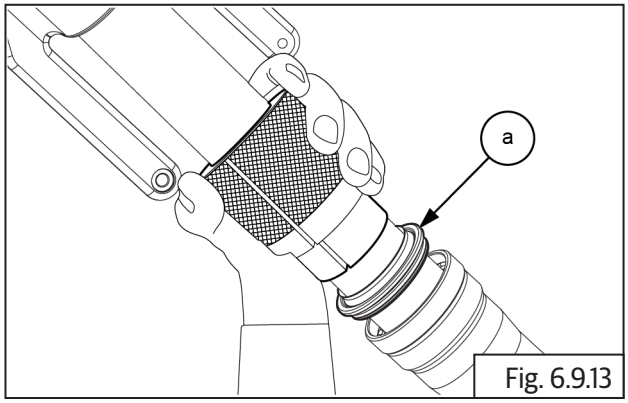

Fig. 6.9.13

SPL 	Part No: ST31885/A Part Name: USD Dust Seal And Oil Seal Installer

- Install the spring **(a)** inside the fork body.

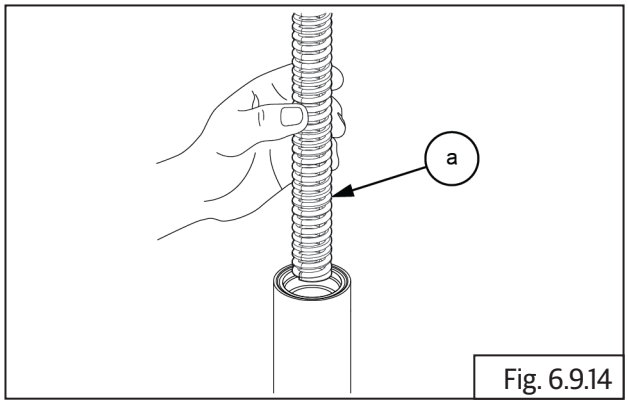

Fig. 6.9.14

- Fill recommended fork oil into main tube.
- For the fork oil interval and specifications" refer the Technical Specifications & PMS chapters

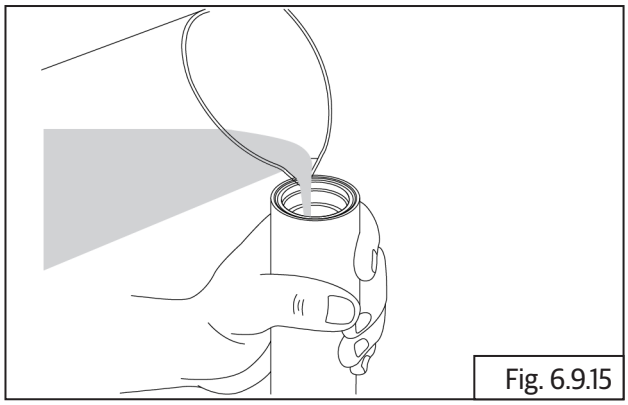
Fig. 6.9.15

Quantity:	587 ± 2.5 ml
Oil grade:	SS- 47G

- Locate the piston assembly **(a)** into fork body.

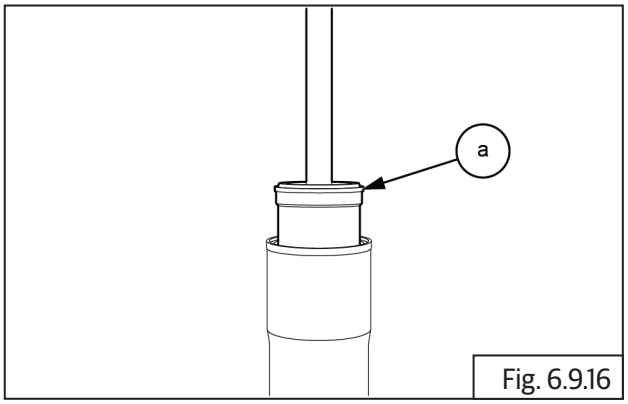

Fig. 6.9.16

- Using special tool **(a)** and assembly fork into USD Stopper Ring jig.

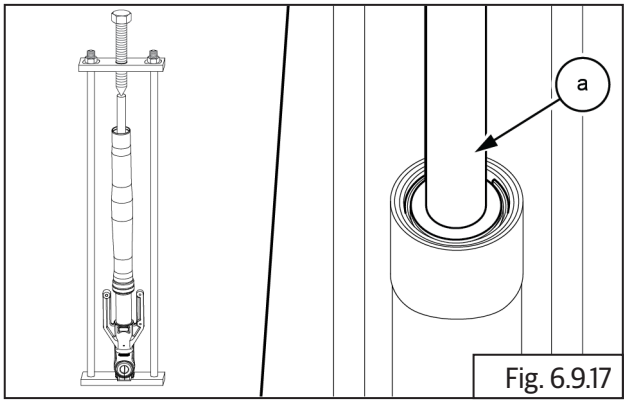

Fig. 6.9.17

SPL 	Part No: ST31886/A Part Name: USD Stopper Ring Removal Jig

	24mm Double end Spanner 17mm Double end Spanner

- Assemble the snap ring **(a)** into fork tube using the special tool **(b)**.

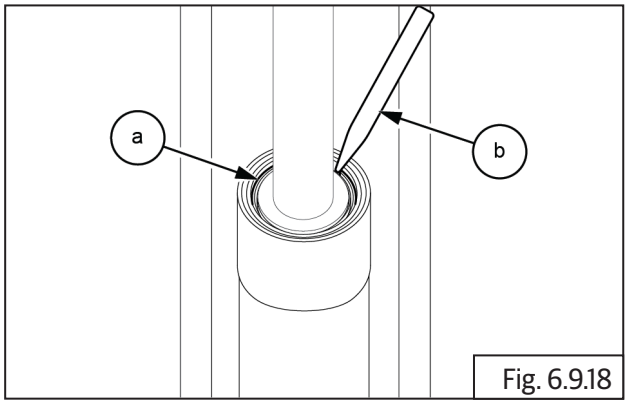

Fig. 6.9.18

SPL	Part No: ST31887/A
	Part Name: USD Stopper Ring Remover

- Remove fork assembly **(a)** from SPG jack.

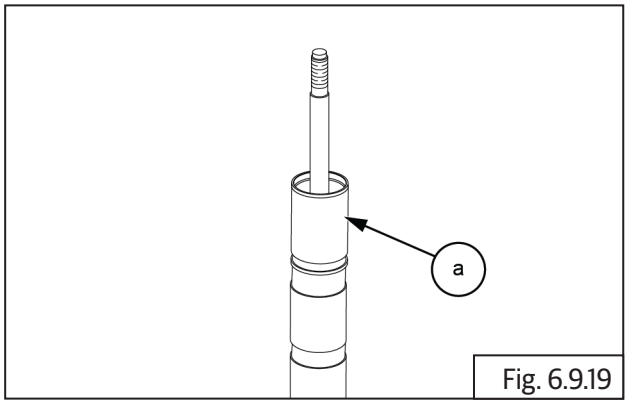

Fig. 6.9.19

- Assembly the fork nut **(a)** and fork cap nut **(b),** hand tighten just sufficiently.

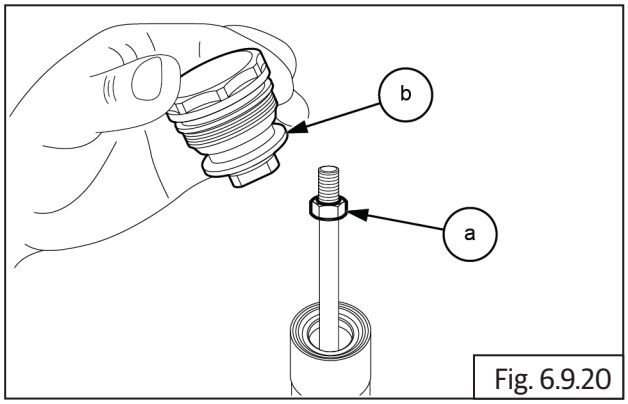

Fig. 6.9.20

- Lock the fork cap nut **(a)** and tighten fork nut.

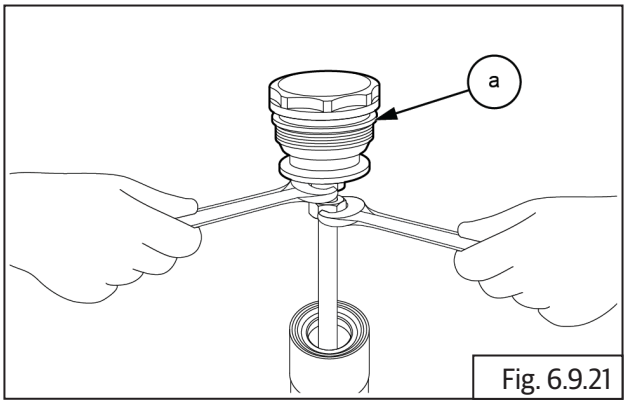

Fig. 6.9.21

	17 mm Double end spanner 14 mm Double end spanner

- Press and tighten fork cap nut **(a)** on fork assembly.

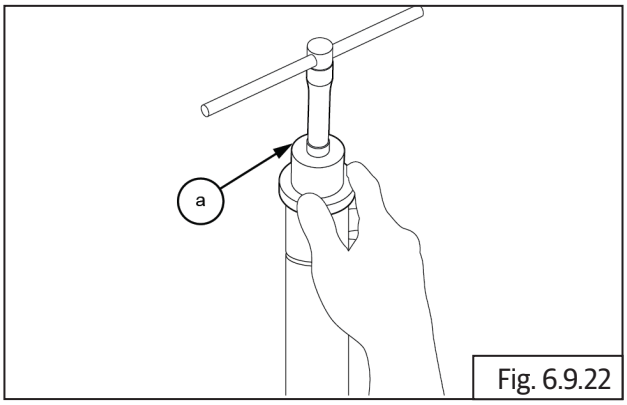

Fig. 6.9.22

SPL	Part No: ST31884/A
	Part Name: USD Fork Nut Remover And Installer

	USD Fork Nut
	20 N-m/2.0 kgf-m

6.10.5. Front Fork LH

NOTE
• *Apply grease to seal and bush press-fit area of outer tube and oil seal lip part.*

- Locate and install the dust seal **(a)** into slide pipe.

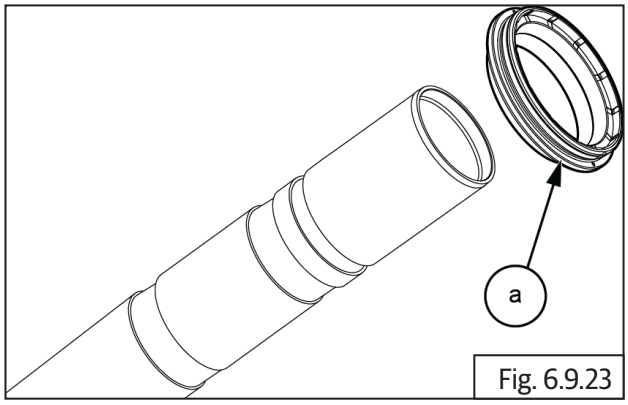

Fig. 6.9.23

- Locate and install the oil seal stopper ring **(a)** into slide pipe.

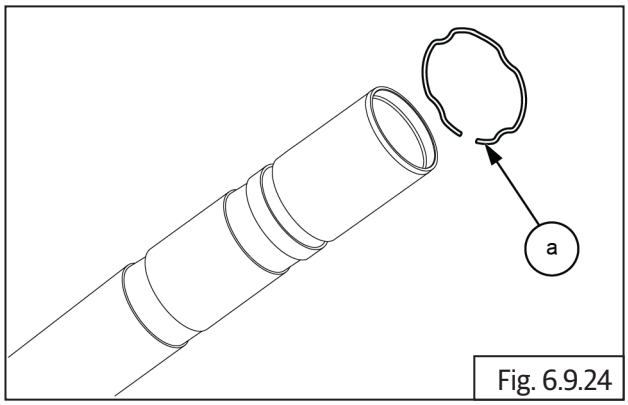

Fig. 6.9.24

NOTE
• Oil seal has a direction. Insert engraved side (surface) to axle holder side.

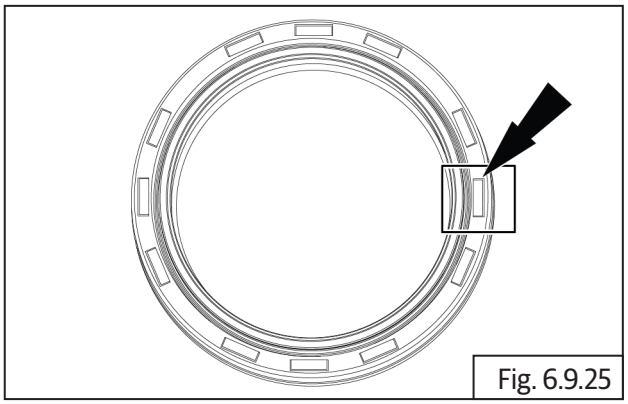
Fig. 6.9.25

- Locate and install the oil seal **(a)** into slide pipe.

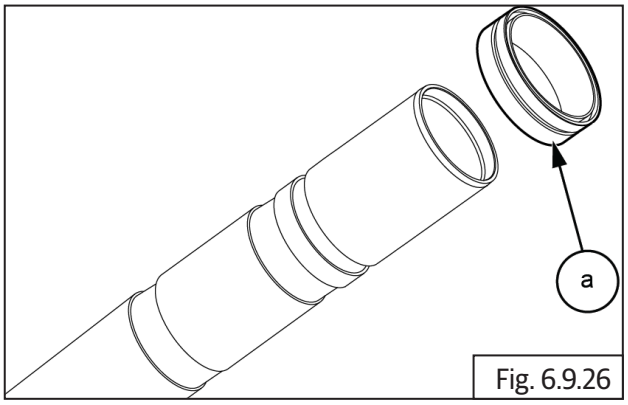

Fig. 6.9.26

- Locate and install the seal spacer **(a)** into slide pipe.

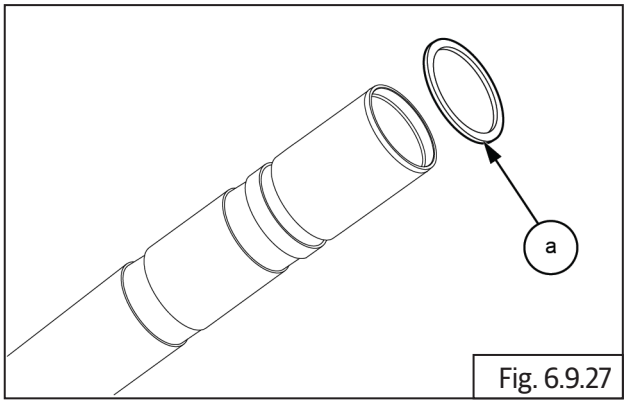

Fig. 6.9.27

- Locate and install the Guide bush **(a)** into slide pipe.

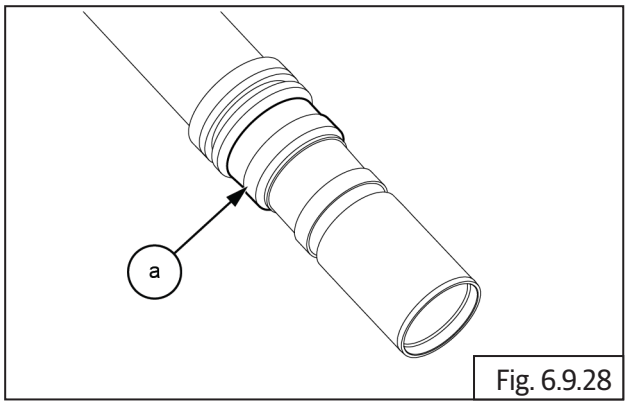

Fig. 6.9.28

- Locate and install the slide bush **(a)** into slide pipe.

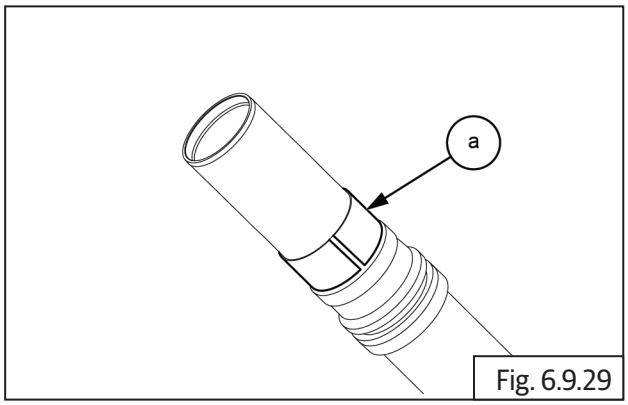

Fig. 6.9.29

- Apply grease thinly to the outer side (**a & b**) of guide bush oil seal.

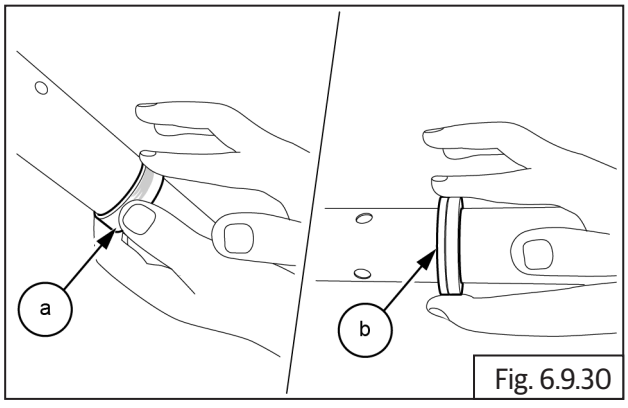

Fig. 6.9.30

- Install the slide pipe **(a)** into fork body.

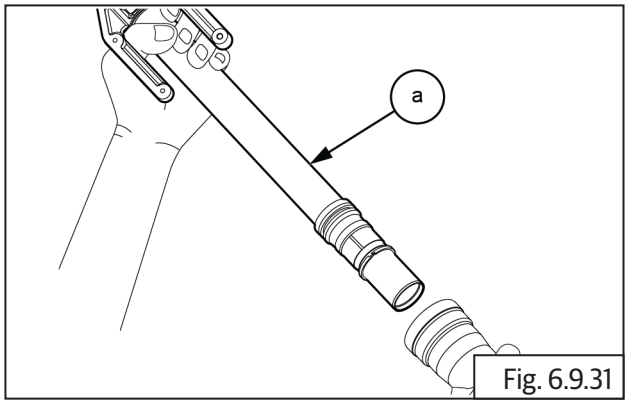

Fig. 6.9.31

- Locate and install the oil seal **(a)** into fork body using special tool.

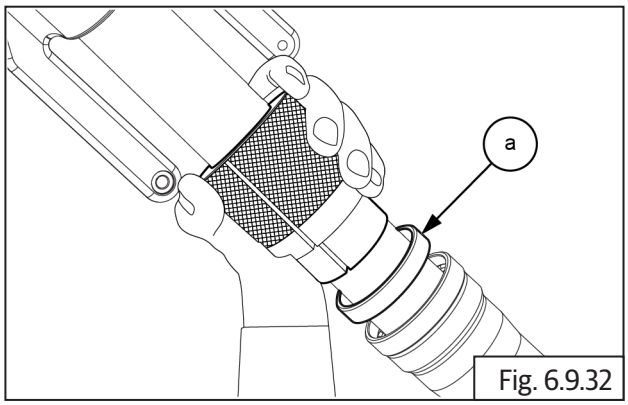

Fig. 6.9.32

SPL 	Part No: ST31885/A Part Name: USD Dust Seal And Oil Seal Installer

- Install the Oil seal stopper ring **(a)** into fork body.

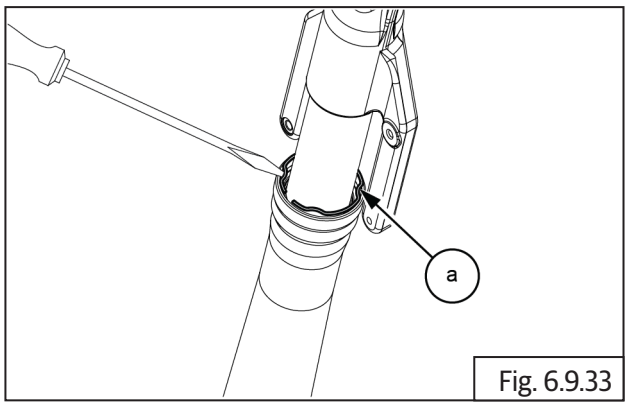

Fig. 6.9.33

	circlip plier

- Press the dust seal **(a)** into fork body using special tool.

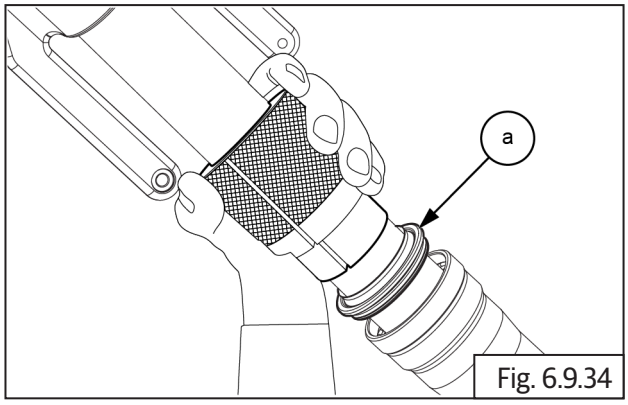

Fig. 6.9.34

SPL 	Part No: ST31885/A Part Name: USD Dust Seal And Oil Seal Installer

- Install the spring **(a)** inside fork body.

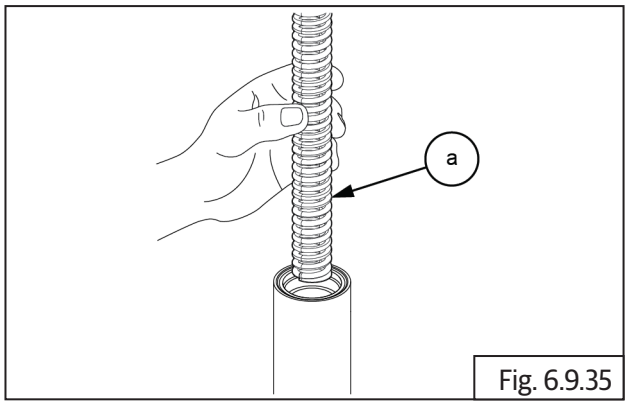

Fig. 6.9.35

- Fill recommended fork oil into main tube.
- For the fork oil interval and specifications" refer the Technical Specifications & PMS chapters

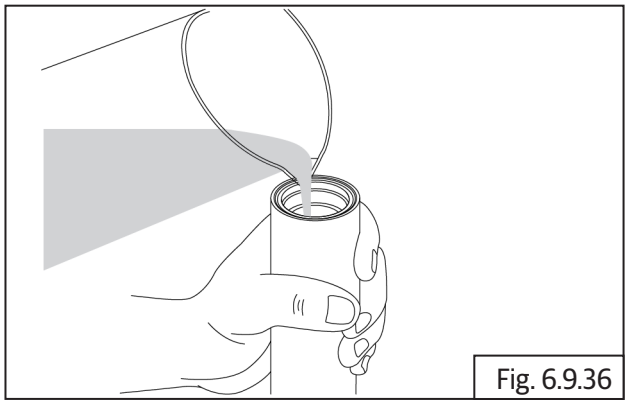
Fig. 6.9.36

Quantity:	590 ± 2.5 ml
Oil grade:	SS- 47G

- Assemble the piston rod **(a)** spring **(b)** and washer **(c)**

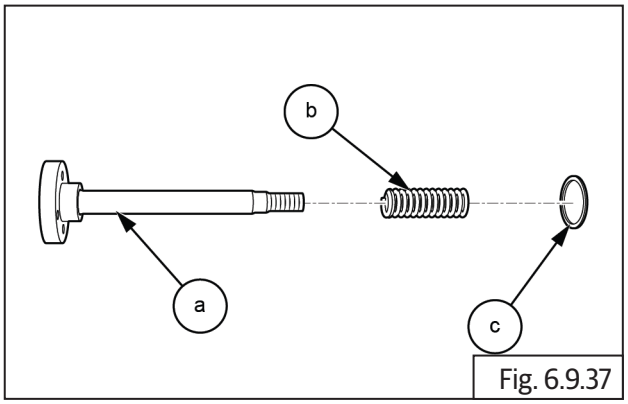

Fig. 6.9.37

- Locate the piston assembly **(a)** into fork body.

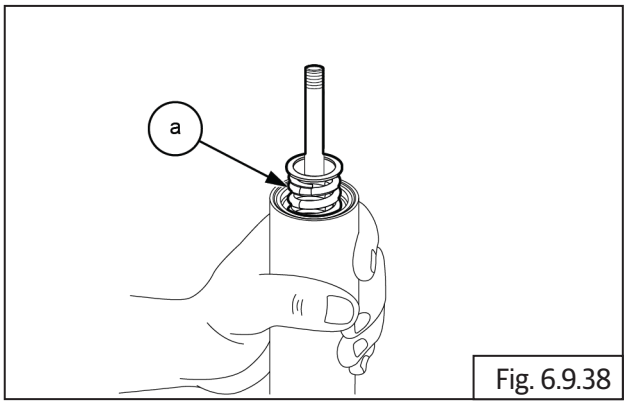

Fig. 6.9.38

- using special tool **(a),** assemble the fork into the SPG jack.

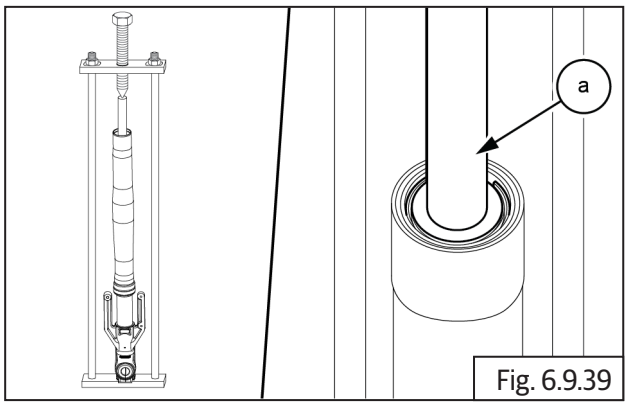

Fig. 6.9.39

SPL 	Part No: ST31886/A Part Name: USD Stopper Ring Removal Jig

	24mm Double end Spanner 17mm Double end Spanner

- Assemble the snap ring **(a)** into fork tube using the special tool **(b)**.

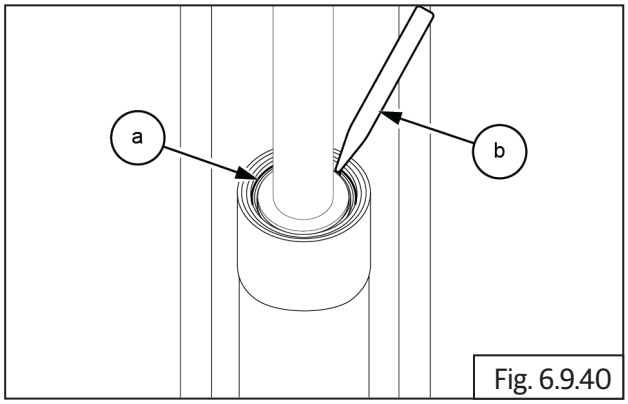

Fig. 6.9.40

SPL	Part No: ST31887/A Part Name: USD Stopper Ring Remover

- Remove fork assembly **(a)** from SPG jack.

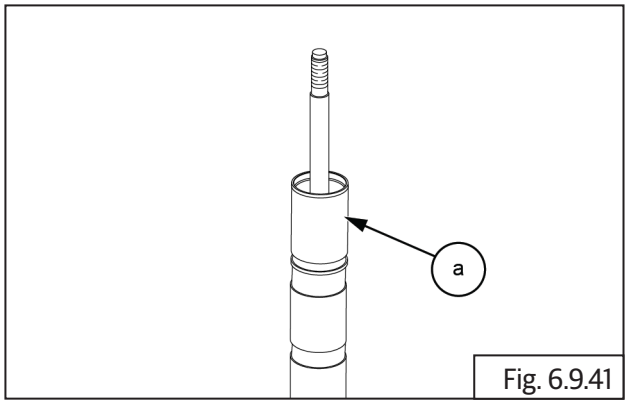

Fig. 6.9.41

- Assembly the fork nut **(a)** and fork cap nut **(b)** hand tighten just sufficiently.

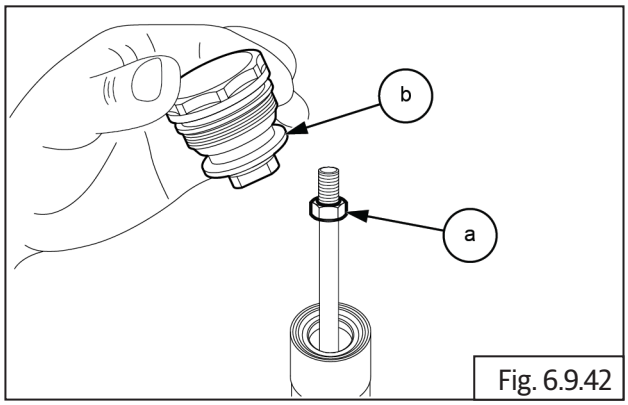

Fig. 6.9.42

- Lock the fork cap nut **(a)** and tighten fork nut.

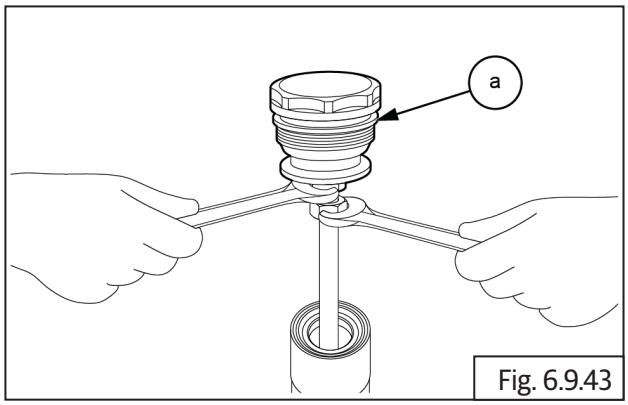

Fig. 6.9.43

	17 mm Double end spanner 14 mm Double end spanner

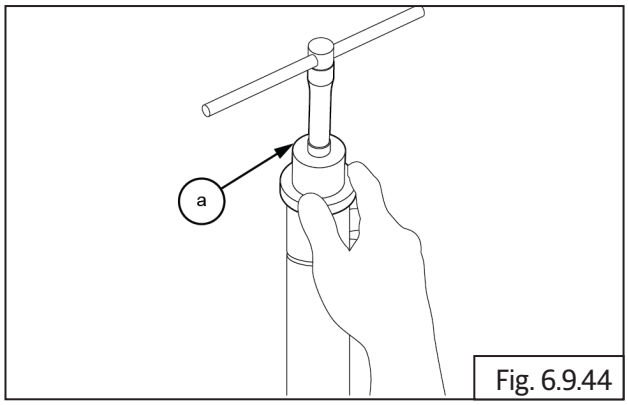

Fig. 6.9.44

	Part No: ST31884/A
	Part Name: USD Fork Nut Remover And Installer

	USD Fork Nut
	20 N-m/2.0 kgf-m

FUEL SYSTEM

CONTENTS PAGE

7.1. Fuel System Components....519

Dismantling....519

7.1.1. Fuel Tank....519

7.1.2. Fuel Pump Connector and Fuel Level Sensor....520

7.1.3. Fuel Hose (Fuel Pump to Injector)....520

7.1.4. EVAP Connections to Fuel Tank....520

7.1.5. Drain Hose....520

7.1.6. Fuel Filter....521

7.1.7. Fuel Pump....522

7.1.8. Fuel Float....523

Inspection....523

7.1.9. Fuel Float....523

7.1.10. Fuel Pump....524

7.1.11. Fuel Filter....525

Assembly....525

7.1.12. Fuel Float....525

7.1.13. Fuel Pump....526

7.1.14. Fuel Filter....527

7.1.15. Drain Hose....527

7.1.16. EVAP Connections to Fuel Tank....528

7.1.17. Fuel Hose (Fuel Pump to Injector)....528

7.1.18. Fuel Pump Connector and Fuel Level Sensor....528

7.1.19. Fuel Tank....529

7.1. Fuel System Components

⚠ WARNING

Gasoline is extremely flammable and highly explosive. Please handle with care. Improper handling can lead to fatal accident or serious injury. Always drain/fill fuel only in a well ventilated area.

Ensure there is no scope for flames or sparks near by while draining/filling fuel.

⚠ CAUTION

Make sure the fuel pressure is relieved before disconnecting the fuel connection.

⚠ CAUTION

Ensure the motorcycle is upright on a firm and flat surface.

Dismantling

7.1.1. Fuel Tank

- Ensure the ignition and stop switches are in OFF position.
- Remove the fuel tank cap. Drain fuel completely from fuel tank.
- Remove the following parts:
  - Remove side panel RH (Refer_____).
  - Disconnect battery terminal (Refer_____).
  - Remove rider seat (Refer_____).
- Loosen and remove **2 Nos** Hex head flange bolts **(M6) (a) and bushes** from rear end of fuel tank **(b)**.

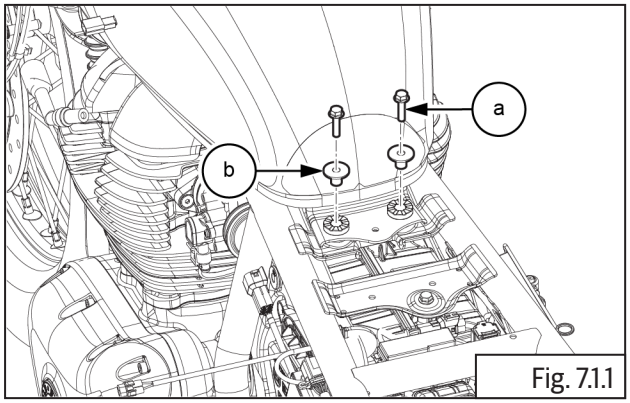

Fig. 7.1.1

	10 mm Socket with Ratchet

- Remove the **2 Nos** grommets **(a)** from the fuel tank rear.

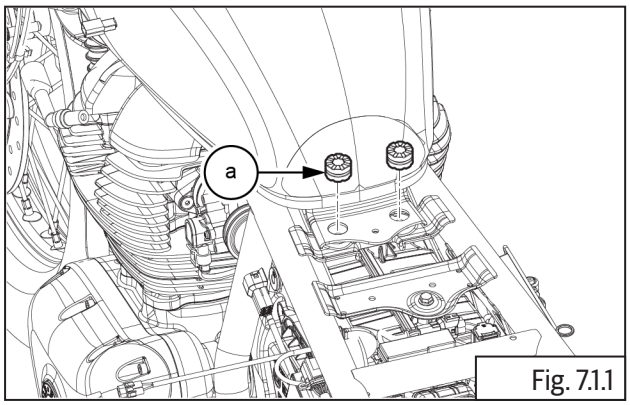

Fig. 7.1.1

	Minus Screw Driver

7.1.2. Fuel Pump Connector and Fuel Level Sensor

- Gently lift fuel tank **(a)** upwards and pull backwards slightly.
- Disconnect fuel pump connector **(b)** from fuel tank.

⚠ CAUTION

DO NOT lift the tank too much to prevent damage to connectors and brake hoses.

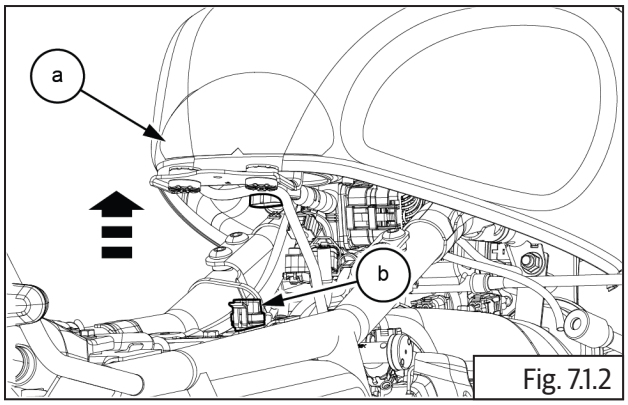

Fig. 7.1.2

- Disconnect fuel level sensor connector **(a)** from fuel tank.

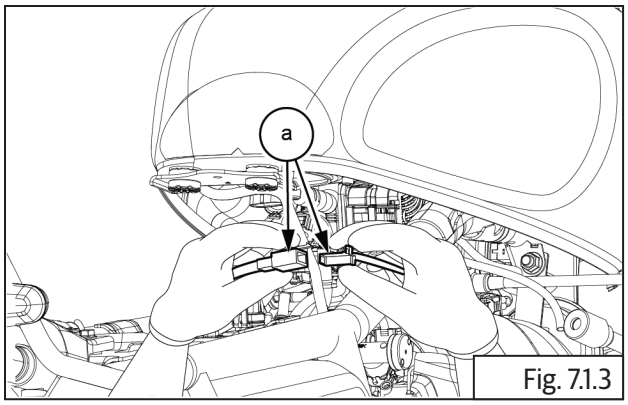

Fig. 7.1.3

7.1.3. Fuel Hose (Fuel Pump to Injector)

- Clean quick fix adapter area and disconnect by pressing lock button **(a)**.
- Remove fuel hose **(b)**.

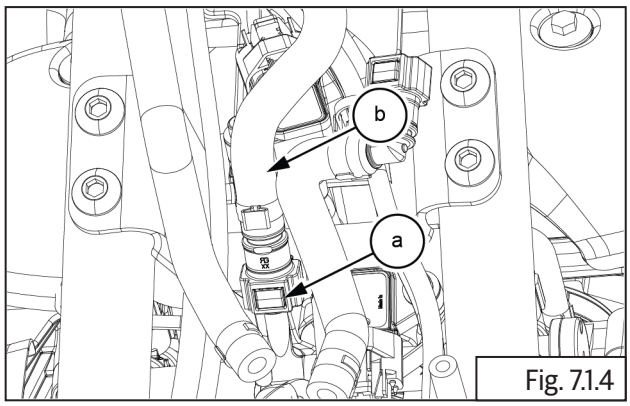

Fig. 7.1.4

7.1.4. EVAP Connections to Fuel Tank

- Disconnect EVAP connection hose **(a)** from fuel tank **(b)**.

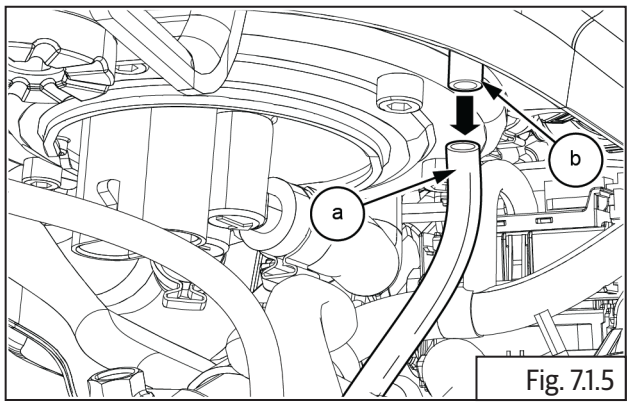

Fig. 7.1.5

7.1.5. Drain Hose

- Disconnect drain hose connection **(a)** from fuel tank **(b)**.

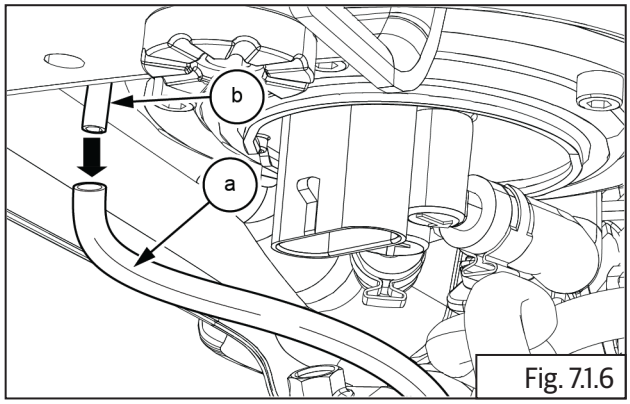

Fig. 7.1.6

- Gently remove fuel tank **(a)** from frame.

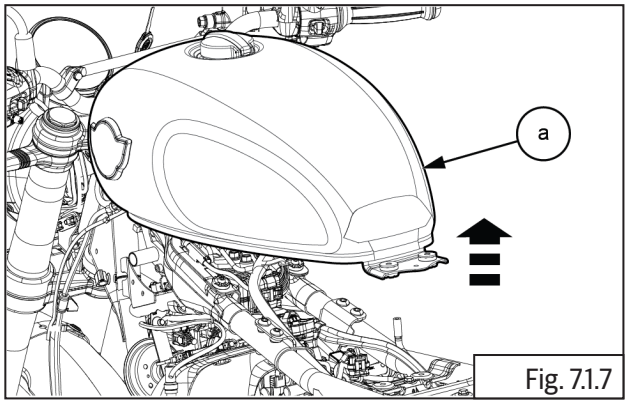

Fig. 7.1.7

- Remove LHS and RHS tank damper **2Nos (a)** from chassis frame.

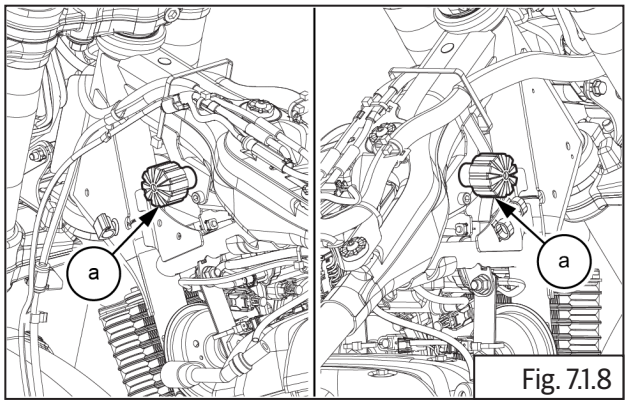

Fig. 7.1.8

7.1.6. Fuel Filter

⚠ CAUTION

- **Invert fuel tank to access fuel pump and fuel float.**
- **Ensure the tank top/side surfaces DO NOT get damaged or scratched while removing fuel pump/float. Provide adequate protection to fuel tank.**

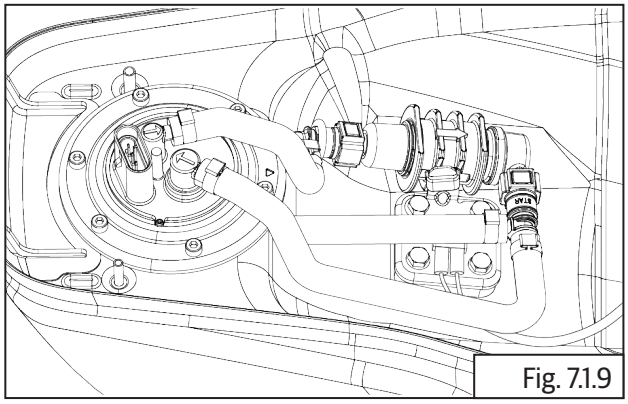
Fig. 7.1.9

- Press lock to release quick connector **(a)** from fuel filter outlet **(b)**.

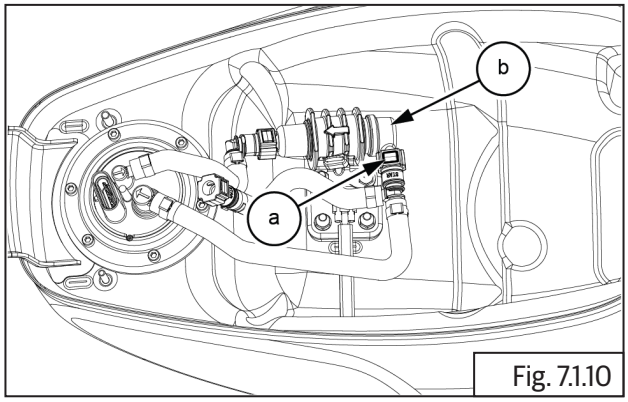

Fig. 7.1.10

- Detach the fuel outlet hose **(a)** from fuel filter outlet **(b).**

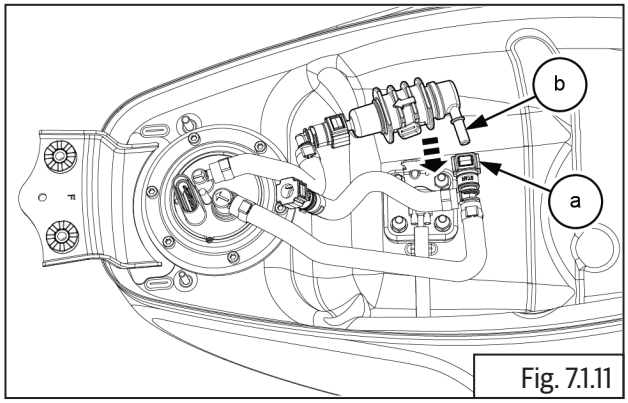

Fig. 7.1.11

- Press lock to release quick connector **(a)** from fuel filter inlet **(b)**.

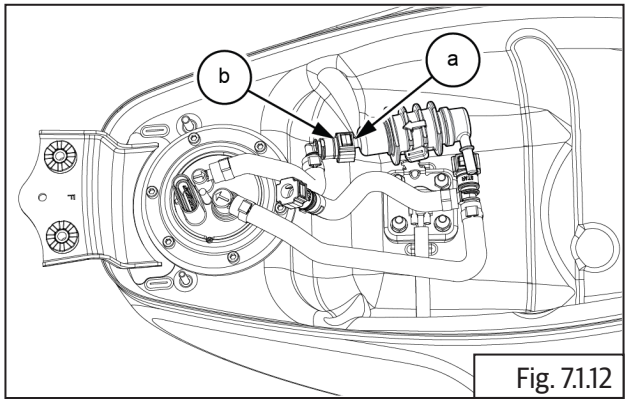

Fig. 7.1.12

- Remove fuel filter **(a)** from fuel pump inlet hose **(b)**.

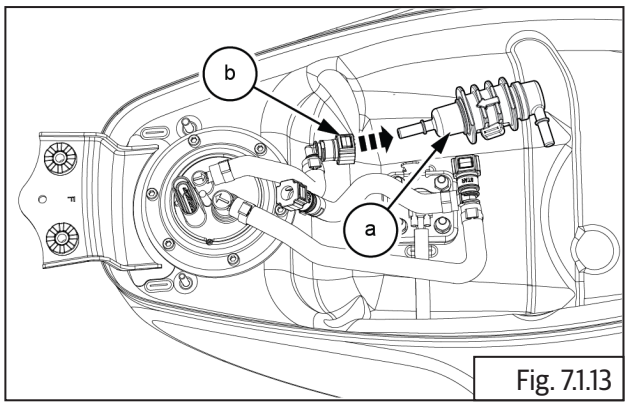

Fig. 7.1.13

7.1.7. Fuel Pump

- Loosen worm clips **2Nos (a)** on the hoses and remove hose from fuel pump.

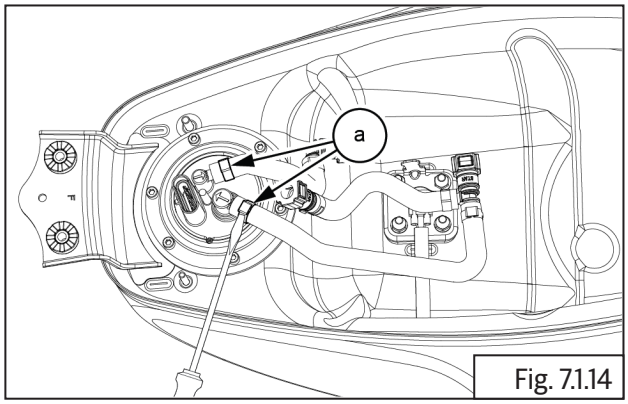

Fig. 7.1.14

	Minus Screw Driver

- Loosen and remove **6Nos** Hex socket head cap screws **(M5) (a)** holding fuel pump **(b)** to tank.

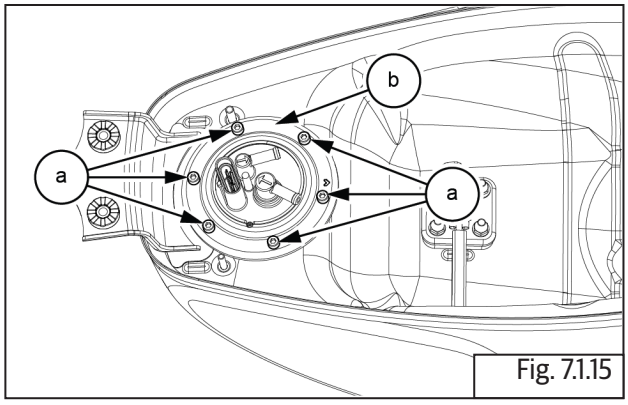

Fig. 7.1.15

	4 mm Socket with Ratchet

- Gently pull out the fuel pump **(a)** from fuel tank **(b)**.

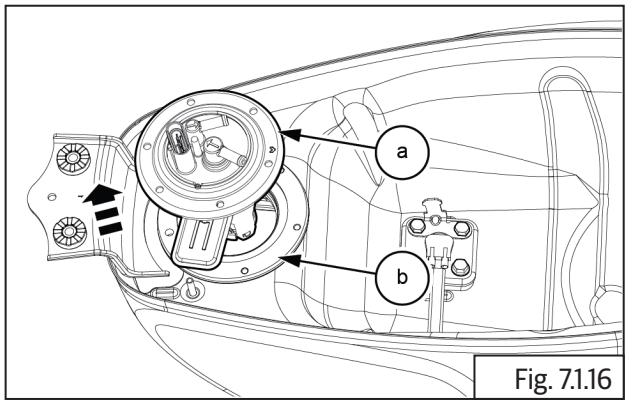

Fig. 7.1.16

- Remove O-rings **(a)** and **(b)** from fuel pump.

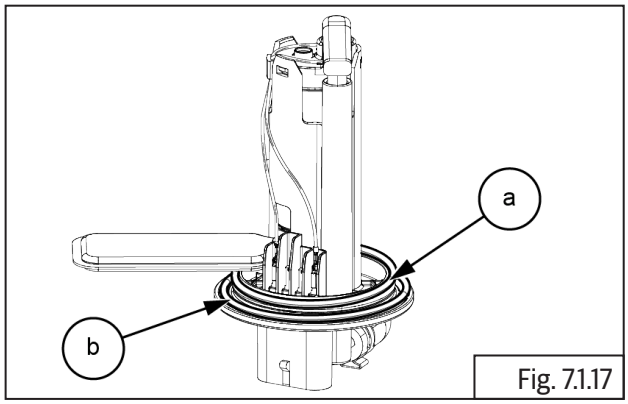

Fig. 7.1.17

NOTE
• *While removing fuel pump, Ensure that no contaminations enters the fuel pump and fuel tank until assembling the fuel pump.*

7.1.8. Fuel Float

- Loosen and remove **4Nos** Hex head flange bolts **(M6) (a)** to remove fuel float **(b)** from fuel tank.

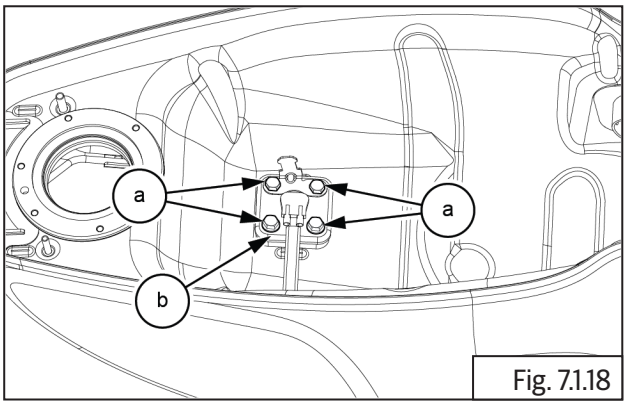

Fig. 7.1.18

	10 mm Socket with Ratchet

- Remove fuel filter bracket **(a)** from fuel float **(b)**.

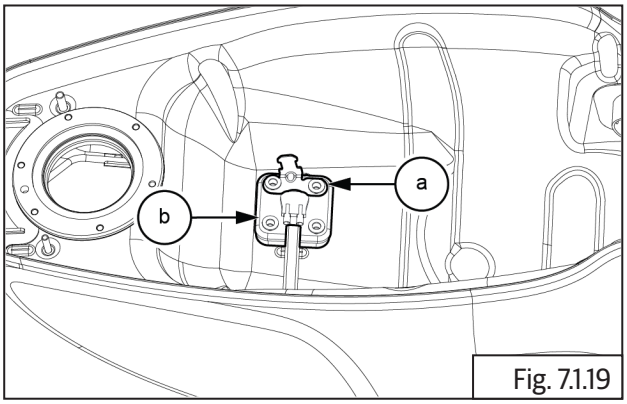

Fig. 7.1.19

- Gently lift and rotate clockwise to take out the complete float unit **(a)** from tank .

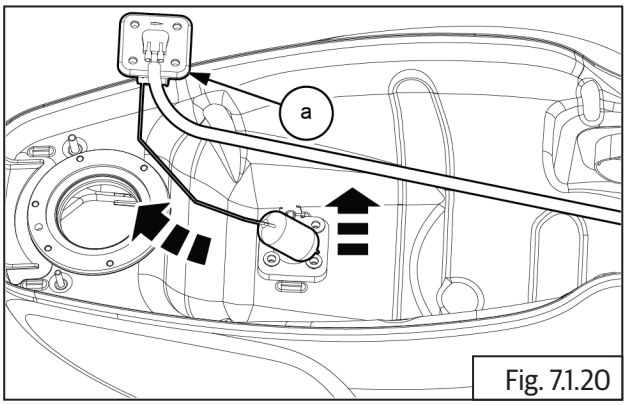

Fig. 7.1.20

⚠ CAUTION

Ensure the float unit does not gets damaged or bent while removing from fuel tank. Store fuel float unit carefully. Do not disturb the level of the float unit as it will seriously affect fuel level indication.

- Remove gasket **(a)** from float unit **(b)**.

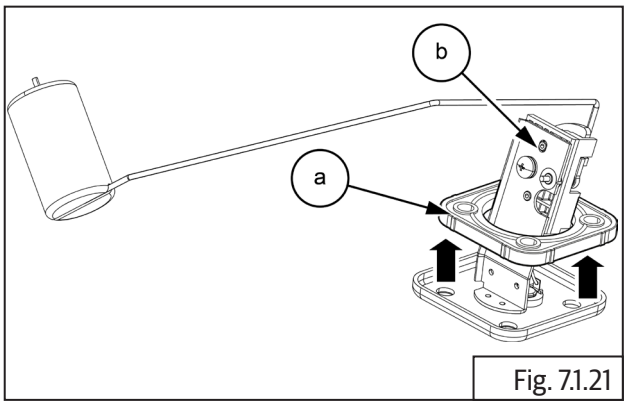

Fig. 7.1.21

Inspection

7.1.9. Fuel Float

- Keep the multimeter in resistance mode.

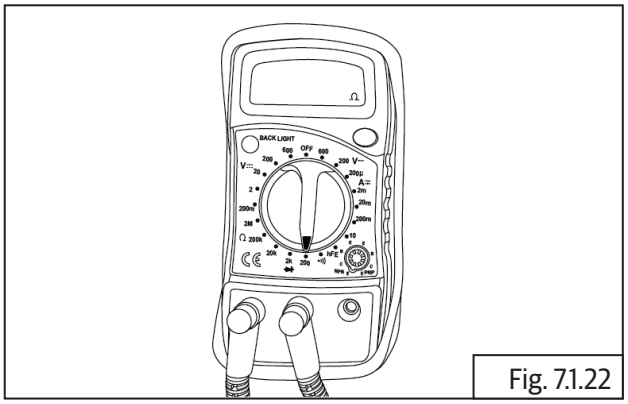
Fig. 7.1.22

- Connect the multimeter positive probe to **pin 1** (light green with black wire) and negative probe to **pin 2** (black with yellow wire).

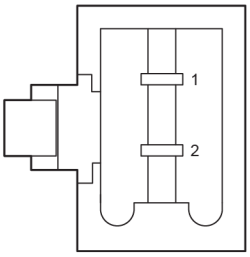

PIN	COLOUR	FUNCTION
1	LIGHTGREEN/BLACK	SIGNAL
2	BLACK/YELLOW	EARTH

Fig. 7.1.23

- It is recommended to check float unit resistance@ Empty, Reserve, Half & Full conditions by multimeter as shown. (Ref. Resistance spec.).

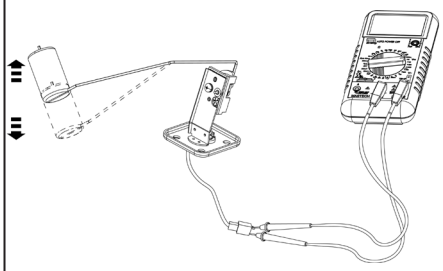

Fig. 7.1.24

- **Resistance Specification.**

Sl.	Indication	"Resistance Value Ω"	"Fuel Level in the Tank"
1	1st Segment blinking	110±3	Reserve
2	2nd Segment on	103±3	
3	3rd Segment on	83±2.5	
4	4th Segment on	68±2.5	Half
5	5th Segment on	55±2.5	
6	6th Segment on	40±2	
7	7th Segment on	10 to 20±2	Full

- If the resistance is not meeting the specified limit please replace the fuel float.
- If fuel float assembly is punctured, replace it.

7.1.10. Fuel Pump

- Replace fuel stainer **(a)** whenever it is removed / damaged.

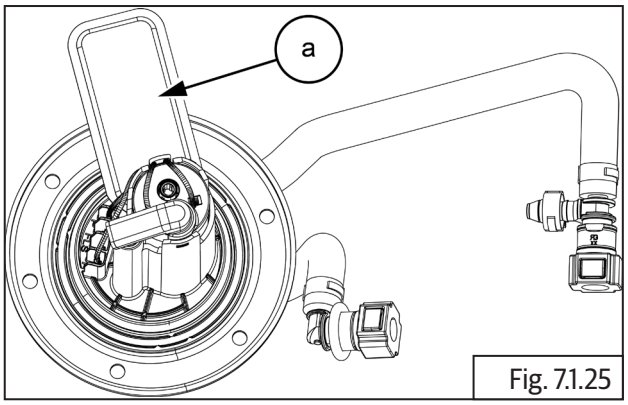

Fig. 7.1.25

7.1.11. Fuel Filter

- Replace fuel filter. Refer PMS chapter for replacement interval.

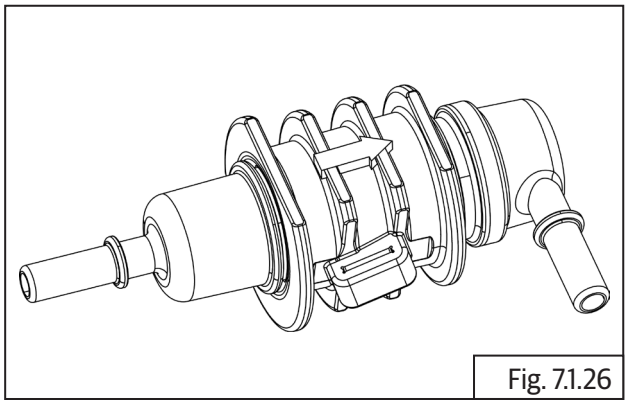

Fig. 7.1.26

- Replace following whenever fuel system is dismantled:
  - O-rings and gaskets
  - Rubber hoses
  - Fuel filters

Do's & Don'ts

- Do not fill fuel tank above anti-splash plate inside fuel tank as it will cause fuel to get into EVAP system.

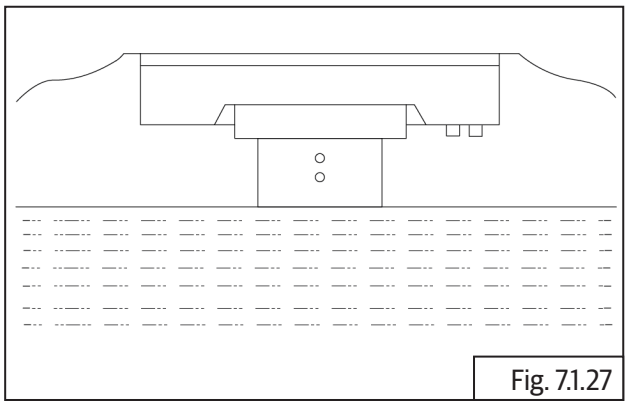

Fig. 7.1.27

Assembly

7.1.12. Fuel Float

- Locate gasket **(a)** into float unit **(b)**.

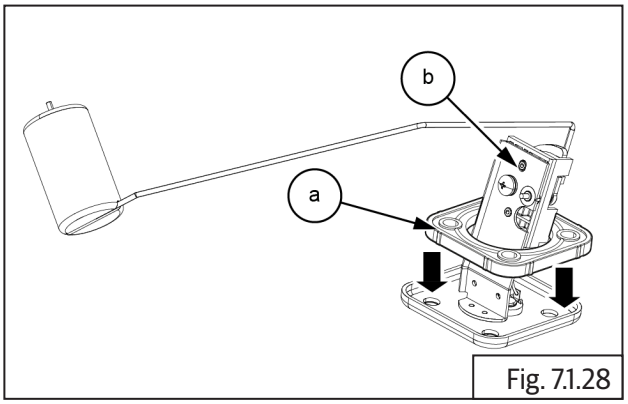

Fig. 7.1.28

- Insert fuel float unit **(a)** on fuel tank **(b)** with float facing towards front of fuel tank. Slightly Rotate anti-clockwise while inserting float in fuel tank.

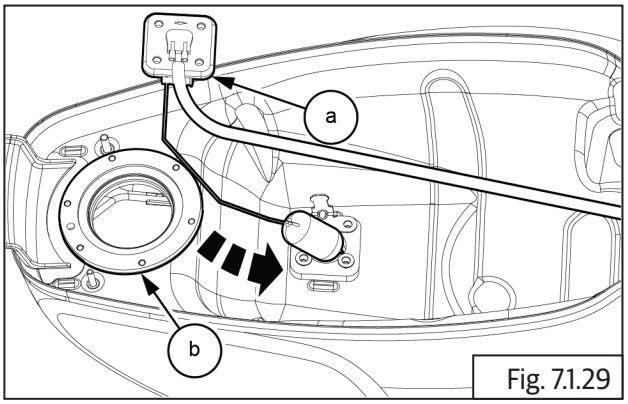

Fig. 7.1.29

- Assemble bracket **(a)** on fuel float unit **(b)**.

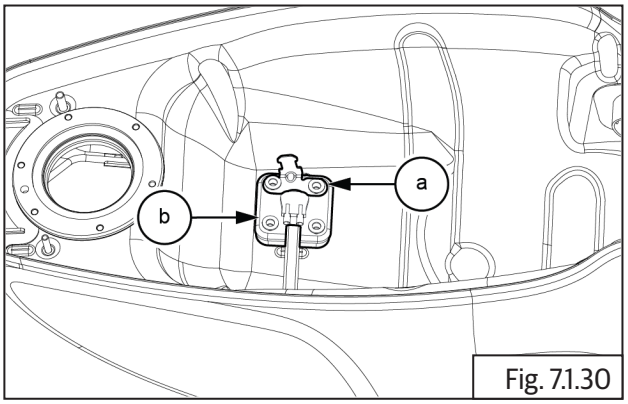

Fig. 7.1.30

- Locate and tighten **4Nos** Hex head flanged bolts **(M6) (a)** on bracket to assemble fuel float unit **(b)** on fuel tank .

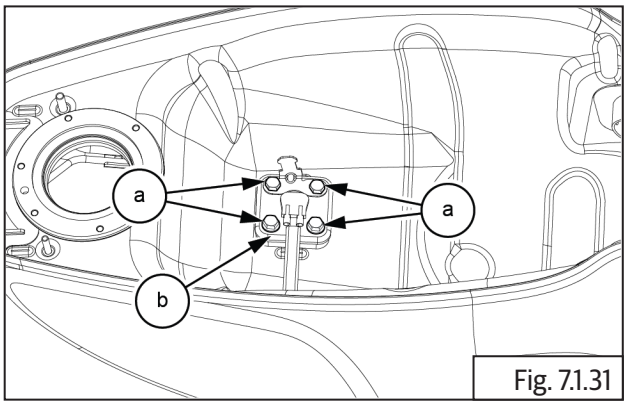

Fig. 7.1.31

	10 mm Socket with Ratchet
	4- 6 N-m / 0.4 - 0.6 kgf-m

7.1.13. Fuel Pump

- Locate new O-rings **(a)** and on fuel pump **(b)**. Ensure it is seated properly.

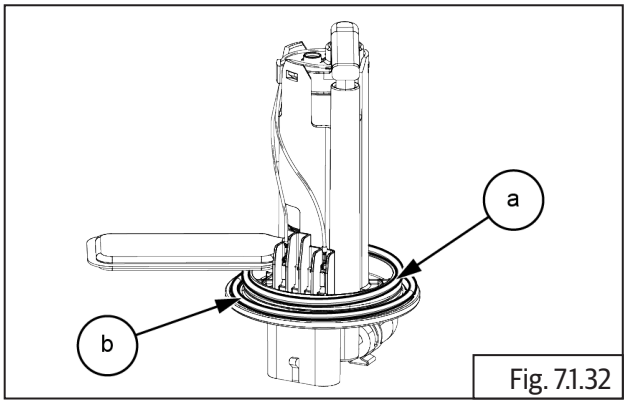

Fig. 7.1.32

NOTE
• *Do not reuse the "O" Rings, Renew "O" Rings*

- Assemble fuel pump **(a)** into tank **(b)** with outlet and return pipes facing towards front of the tank.

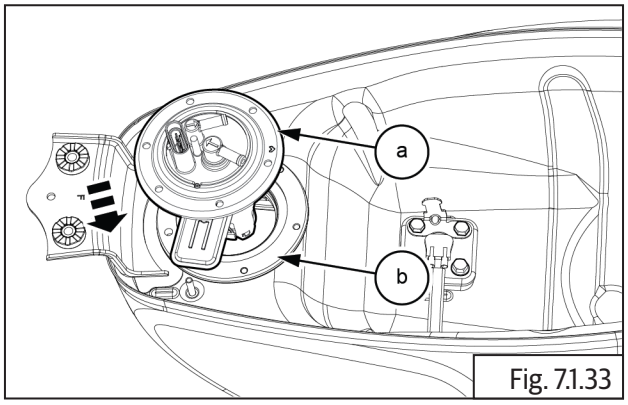

Fig. 7.1.33

- Locate and tighten **6Nos** Hex socket head bolts **(M5) (a)** to assemble fuel pump **(b)** on fuel tank .

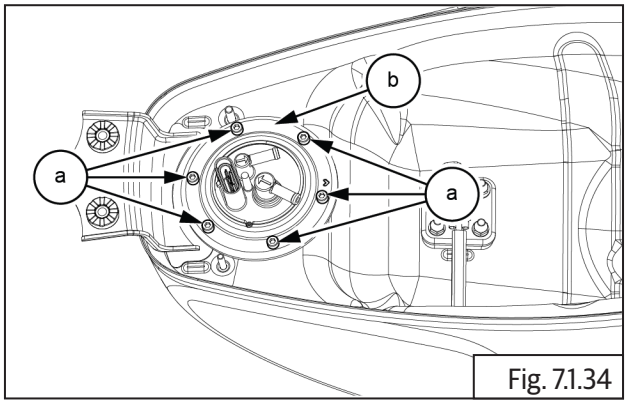

Fig. 7.1.34

	4 mm Socket with Ratchet
	4- 6 N-m / 0.4 - 0.6 kgf-m

- Insert hoses **(a)** on fuel pump assembly.

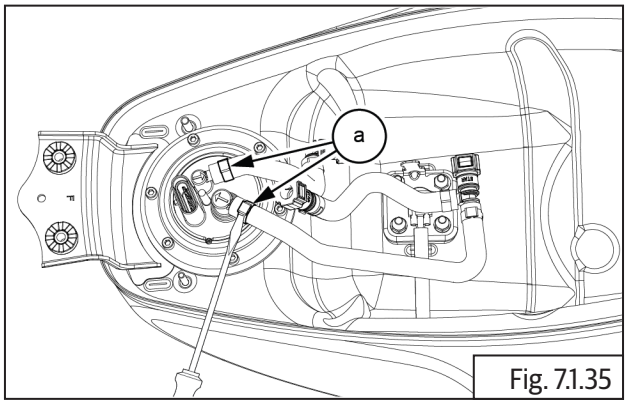

Fig. 7.1.35

- Tighten with clips **(a)**. Ensure the clips are locked properly on the hoses.

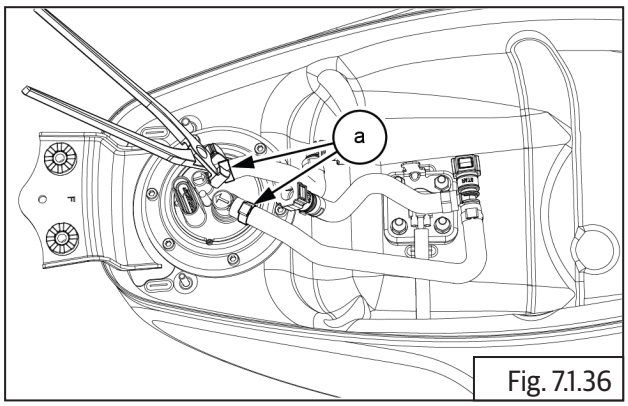

Fig. 7.1.36

	Clamp Removal and install tool

7.1.14. Fuel Filter

- Assemble fuel filter **(a)** on fuel pump inlet hose **(b)**.
- Ensure arrow mark direction on fuel filter is facing towards inlet pipe.

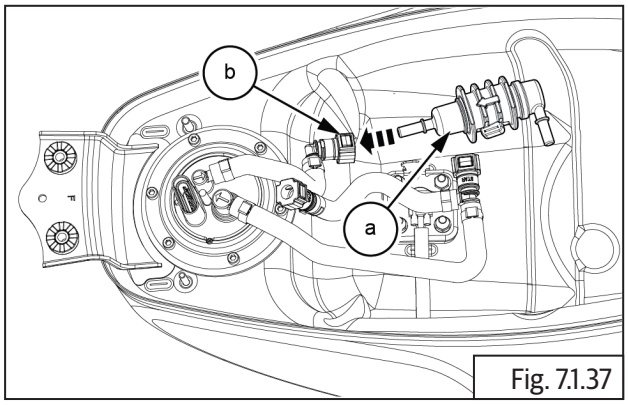

Fig. 7.1.37

- Insert filter quick fix connector **(b)** into the fuel filter inlet **(a)**. Ensure locks seated properly.

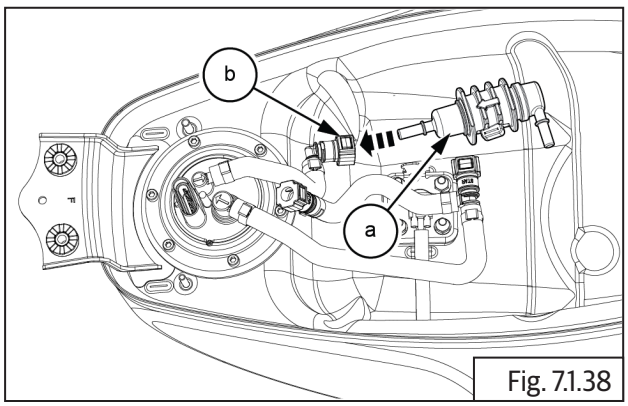

Fig. 7.1.38

- Insert filter outlet hose **(b)** in the quick connector **(a)** and ensure lock is seated properly.

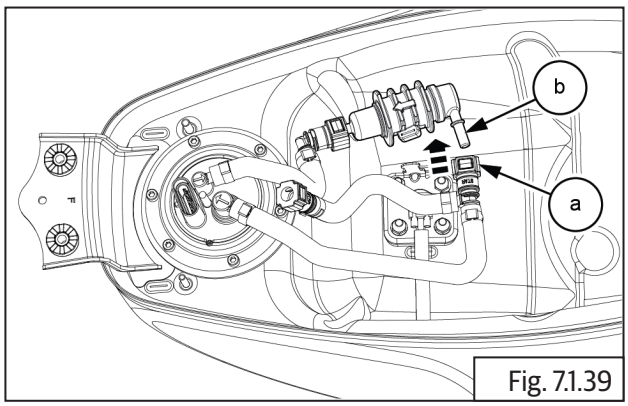

Fig. 7.1.39

7.1.15. Drain Hose

- Press and fix LH and RH tank damper **(a)** on chassis frame.

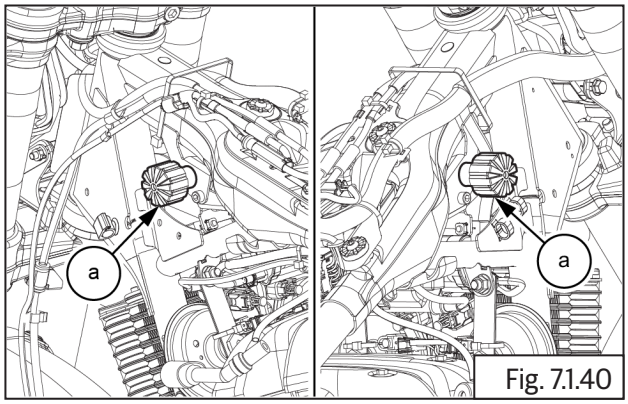

Fig. 7.1.40

- Hold and slide fuel tank **(a)** into frame guide and ensure bush in fuel tank are aligned into guide in frame.

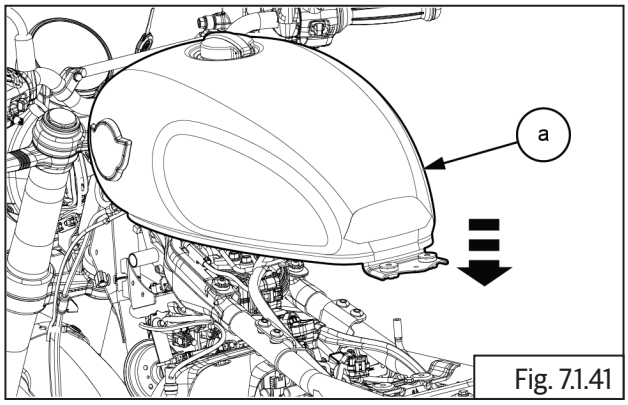

Fig. 7.1.41

- Gently lift fuel tank and connect drain hose connection **(a)** to fuel tank **(b)**.

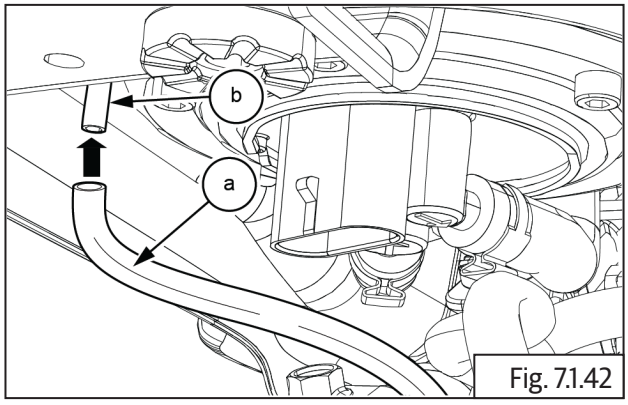

Fig. 7.1.42

7.1.16. EVAP Connections to Fuel Tank

- Connect EVAP connection hose **(a)** to fuel tank **(b)**.

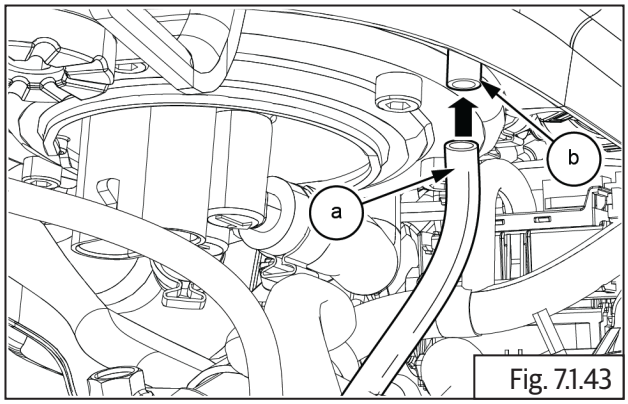

Fig. 7.1.43

7.1.17. Fuel Hose (Fuel Pump to Injector)

- Connect fuel hose **(a)** into quick fix connector **(b)** and ensure lock button is locked with a click sound.

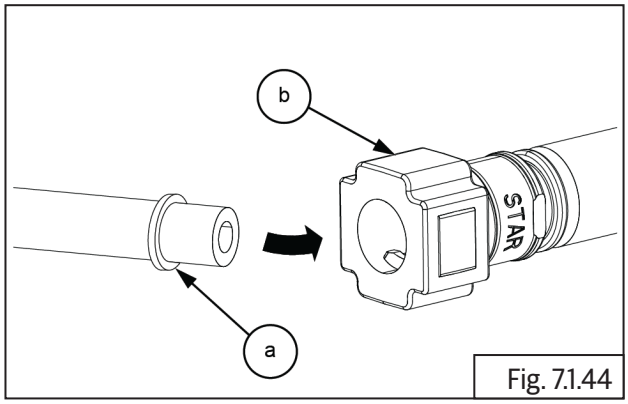

Fig. 7.1.44

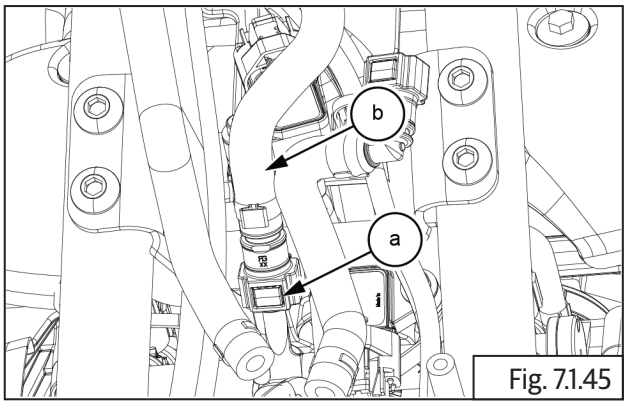

Fig. 7.1.45

7.1.18. Fuel Pump Connector and Fuel Level Sensor

- Connect fuel pump connector **(a)** into fuel pump **(b)**.

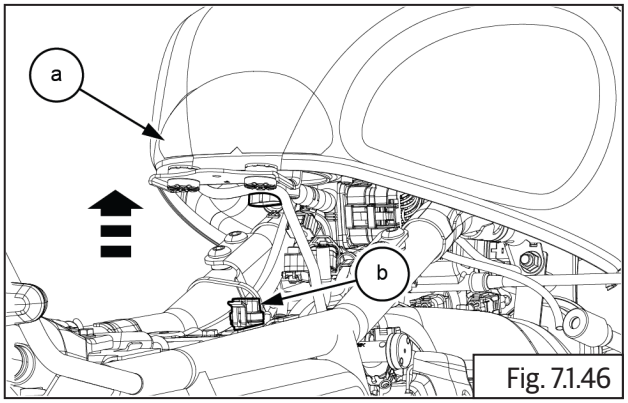

Fig. 7.1.46

- Connect fuel level sensor connector **(a)**.

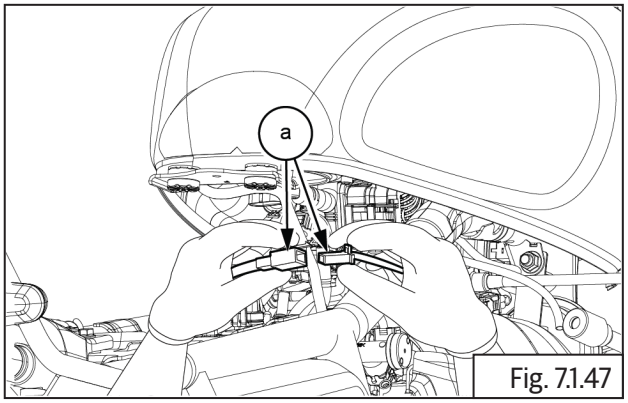

Fig. 7.1.47

7.1.19. Fuel Tank

- Gently lower the fuel tank into frame.
- Install the **2 Nos** grommets **(a)** on the fuel tank rear.

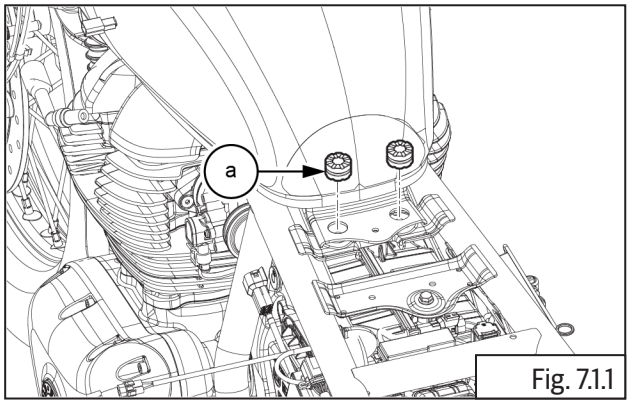

Fig. 7.1.1

- Locate and tighten **2 Nos** Hex head flange bolts **(M6) (a)** and bushes **(b)** on rear end of fuel tank **(b)**.

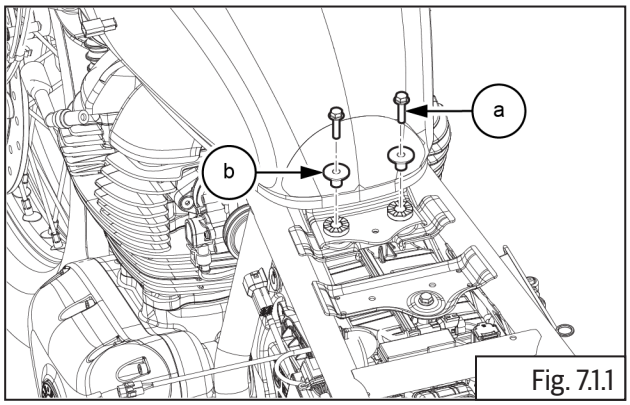

Fig. 7.1.1

	10 mm Socket with Ratchet
	9 -12 N-m / 0.9 - 1.2 kgf-m

- Install the following parts:
  - Connect battery terminal (Refer_____)
  - Install the side panel RH (Refer_____)
  - Install the rider seat (Refer_____).

NOTE
• *Switch ON and OFF the ignition twice and visually check for any fuel leakage or spots on the tank and components, If anything found, inspect and rectify the issue.*

EVAPORATIVE (EVAP) EMISSION CONTROL SYSTEM

CONTENTS PAGE

8. Evaporative (EVAP) Emission Control System 533

General Description 533

8.1. Evaporative (EVAP) Emission Control System 534

Dismantling 534

8.1.1. Charcoal Canister 534

8.1.2. EVAP Purge Valve 536

8.1.3. Hoses 537

Inspection 537

8.1.4. Charcoal Canister 537

8.1.5. Purge Valve 538

8.1.6. Hoses 538

8.1.7. Hose Connectors 538

8.1.8. EVAP System Leak Test Procedure 538

Assembly 538

8.1.9. Hoses 538

8.1.10. EVAP Purge Valve 539

8.1.11. Charcoal Canister 540

8.1.12. EVAP Hose Routing Procedure 542

8. Evaporative (EVAP) Emission Control System

General Description

Royal Enfield twin cylinder motorcycles are equipped with Evaporative (EVAP) Emission Control System.

Whenever the motorcycle is parked after a ride or in hot summer, in high day time temperatures, fuel vapors with hydrocarbons tend to escape into the atmosphere through the vent hole of the fuel tank cap.

The evaporative emission control system traps these fuel vapors and purges it into a charcoal canister. When the engine is running, the vapors from the charcoal canister is routed through a purge valve into the combustion chamber. These vapors are also monitored by the engine management system (EMS) so as to ensure the exhaust emissions are within the specifications.

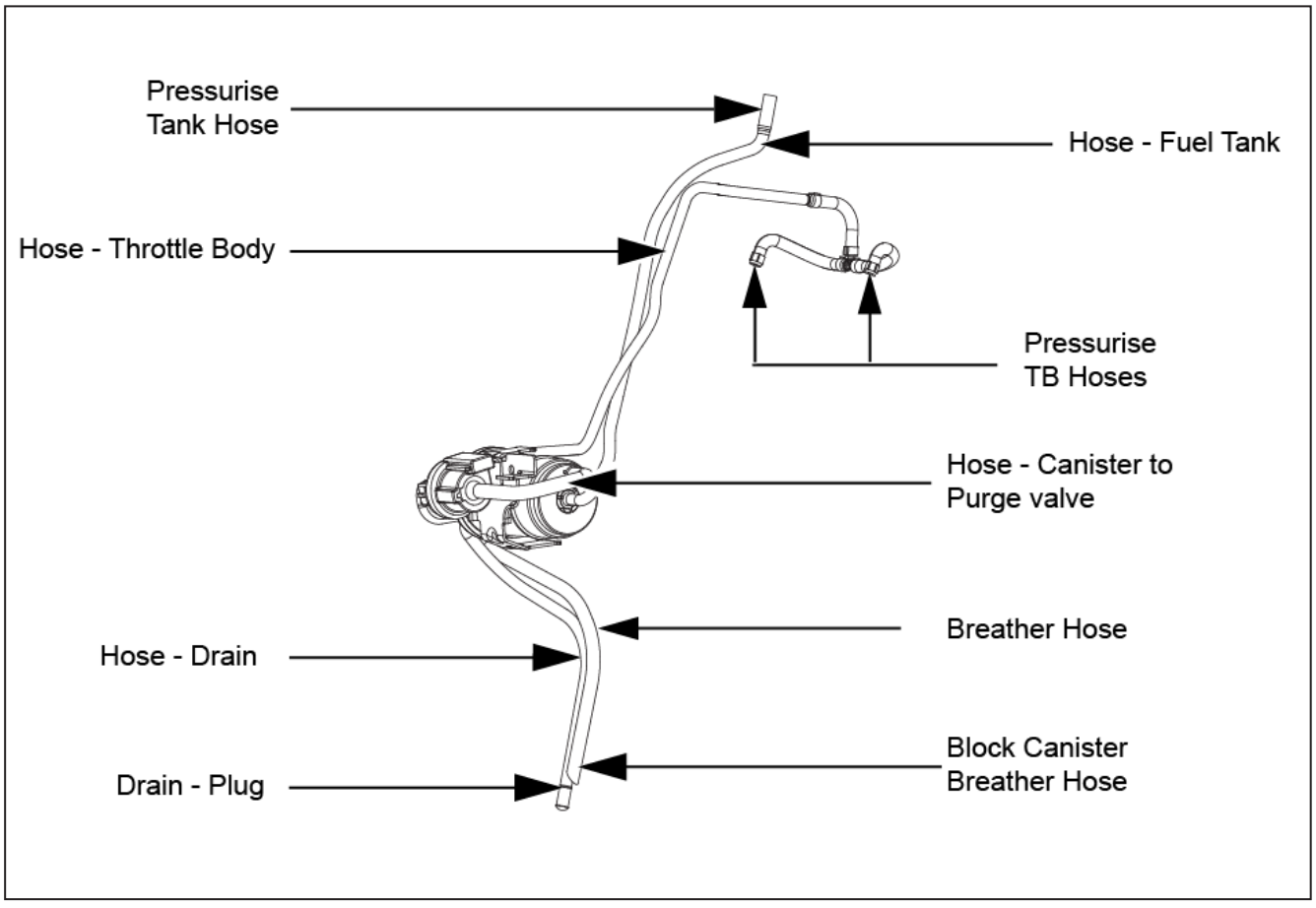

⚠ WARNING

Before dismantling any part of the EVAP system, ensure the engine and exhaust systems are at ambient temperature. Evaporative fuel vapors are highly inflammable and explosive, which can result in serious injury and or fatal accidents.

⚠ WARNING

DO NOT damage or puncture any part of the EVAP system like canister, purge valve etc. DO NOT blow high compressed air into the canister or purge valve as it can result in an explosion.

⚠ CAUTION

Ensure the motorcycle is upright on a firm and flat surface.

NOTE

• Before removing any part of the EVAP system,open fuel tank cap to release the pressure inside..

- **Prior Removal:**
- Ensure ignition key and engine stop switch are in OFF position.
- Disconnect battery negative (-) terminal. (Refer_____)
- Remove the Throttle Body Cover.(Refer_____)
- Remove the RH and LH side Panel.(Refer_____)
- Remove the Seat.(Refer_____)
- Remove the Rear Wheel.(Refer_____)
- Remove the Battery from Frame.(Refer_____)
- Engine control unit (ECU).(Refer_____)
- Rear mudguard.(Refer_____)
- Infill mudguard.(Refer_____)

8.1. Evaporative (EVAP) Emission Control System

Dismantling

8.1.1. Charcoal Canister

- The charcoal canister is located underneath the frame.

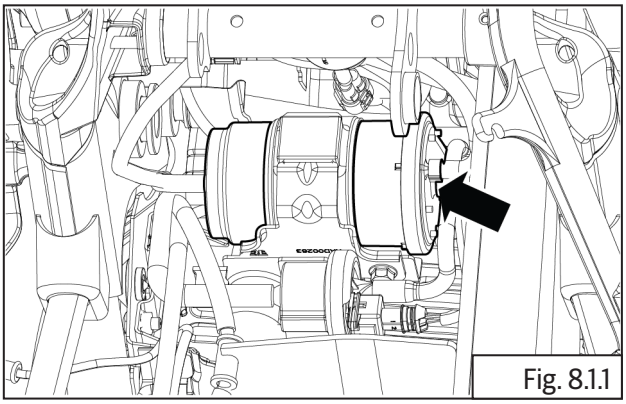

Fig. 8.1.1

- Disconnect electrical connector **(a)** from purge valve.

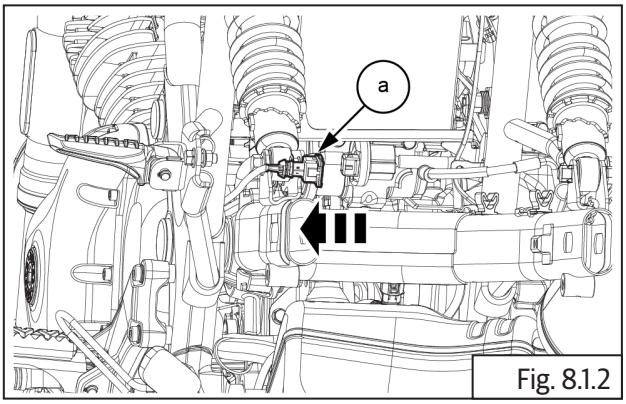

Fig. 8.1.2

- Disconnect EVAP connection hose **(a)** from fuel tank **(b)**.

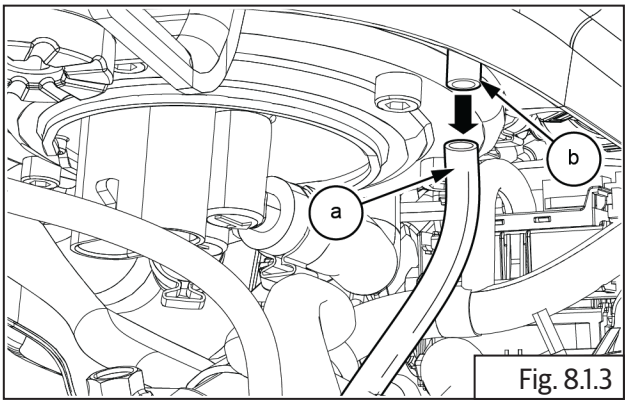

Fig. 8.1.3

⚠ CAUTION

Do not apply excessive force to pull out canister with hoses as it will damage the canister and the hose pipes.

- Disconnect the fuel tank to EVAP hose **(a)**.

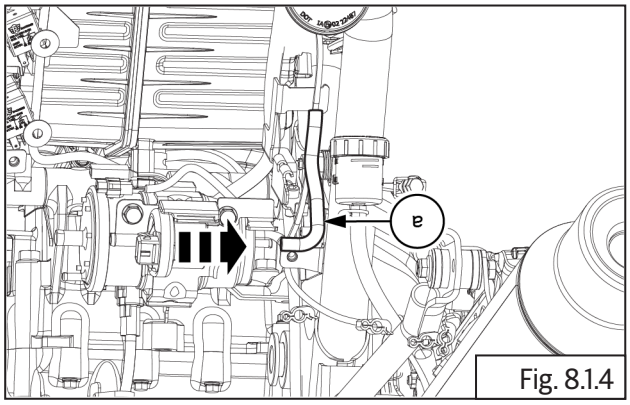

Fig. 8.1.4

- Disconnect the breather hose **(a)** and drain hose **(b)** from EVAP.

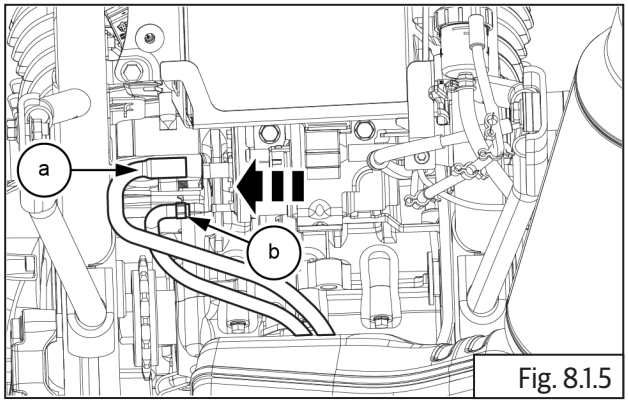

Fig. 8.1.5

- Disconnect the purge valve inlet **(b)** and outlet **(a)** hoses from purge valve.

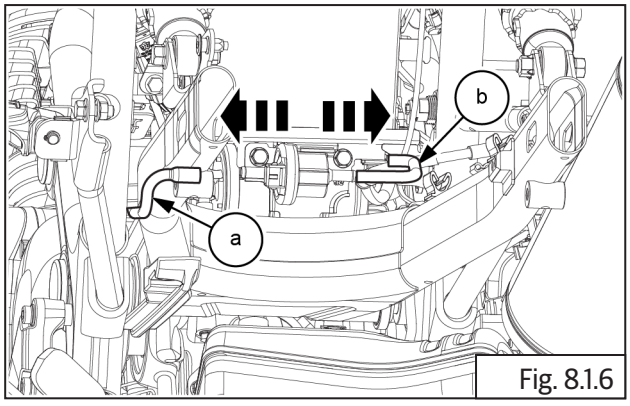

Fig. 8.1.6

- Loosen and remove Hex flange head bolts 2 Nos **(M6) (a)** from EVAP canister bracket.

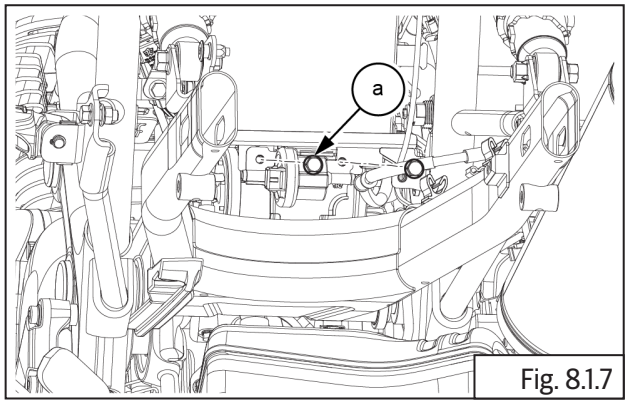

Fig. 8.1.7

	10 mm Socket with Ratchet

- Remove the canister **(a)** from chassis frame and store the canister carefully.

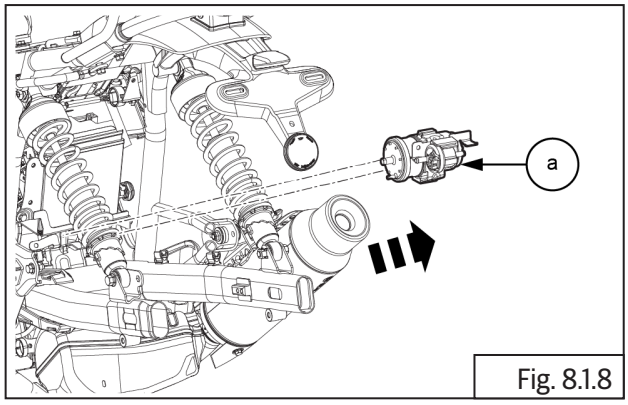

Fig. 8.1.8

- Slide and remove the bracket with purge valve **(a)** from canister.

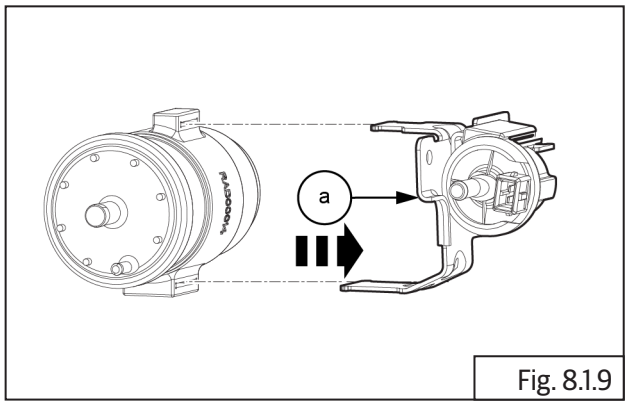

Fig. 8.1.9

- Slide and remove the canister with rubber boot **(a)** from bracket.

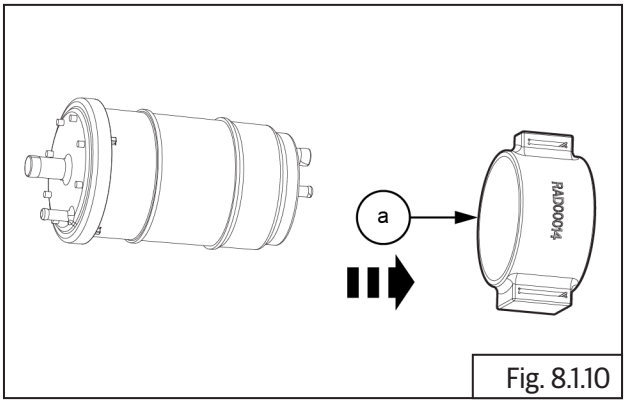

Fig. 8.1.10

8.1.2. EVAP Purge Valve

- Remove the following parts:
  - Side panel RH(Refer_____)
  - Rider seat.(Refer_____)
  - Side panel LH.(Refer_____)
  - Engine control unit (ECU).(Refer_____)
  - Rear mudguard.(Refer_____)
  - Infill mudguard.(Refer_____)
- Disconnect electrical connector **(a)** from purge valve .

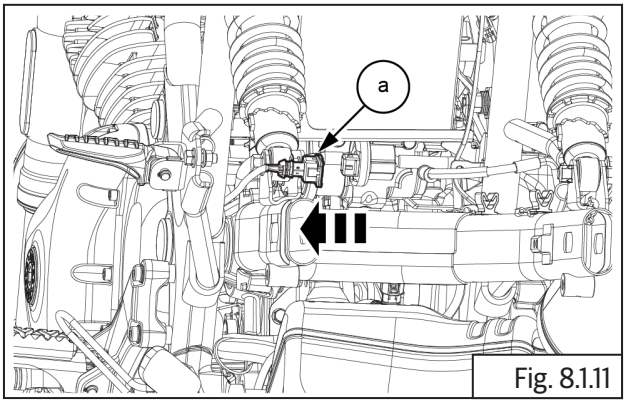

Fig. 8.1.11

- Disconnect the purge valve inlet **(b)** and outlet **(a)** hoses from purge valve.

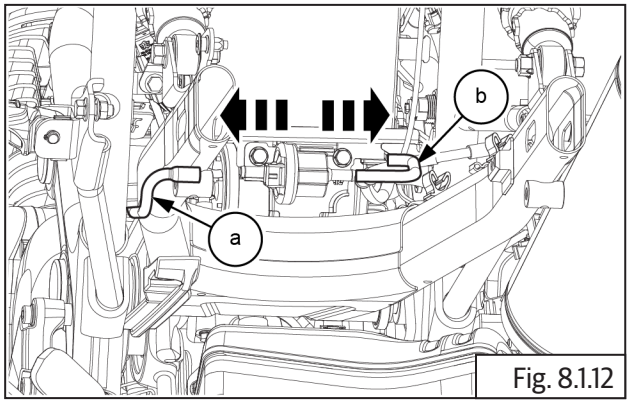

Fig. 8.1.12

- Slide and remove the purge valve with rubber boot **(a)** from bracket.

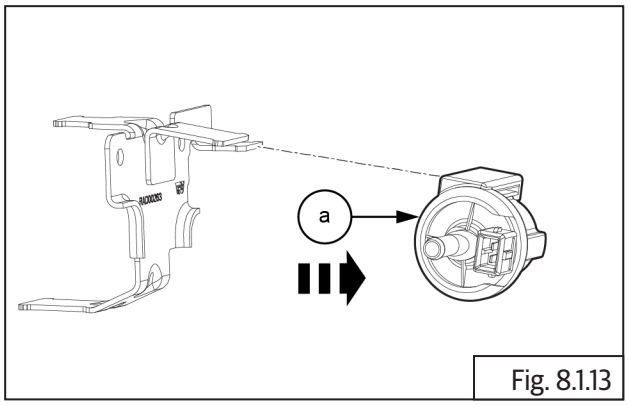

Fig. 8.1.13

- Remove the purge valve from rubber boot.

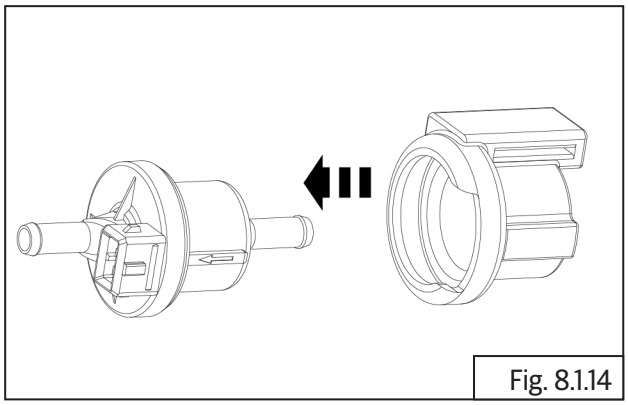
Fig. 8.1.14

8.1.3. Hoses

- Loosen and remove 2 Nos pan head screws **(M5) (a)** from air filter box assembly RHS.

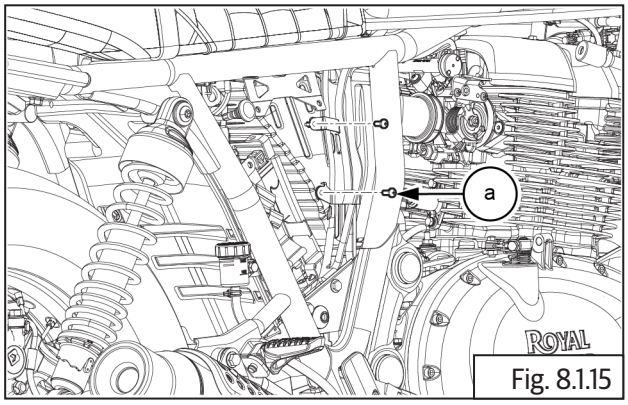

Fig. 8.1.15

	Screw driver (+)

- Remove the top **(a)** and bottom **(b)** clamps from hose.

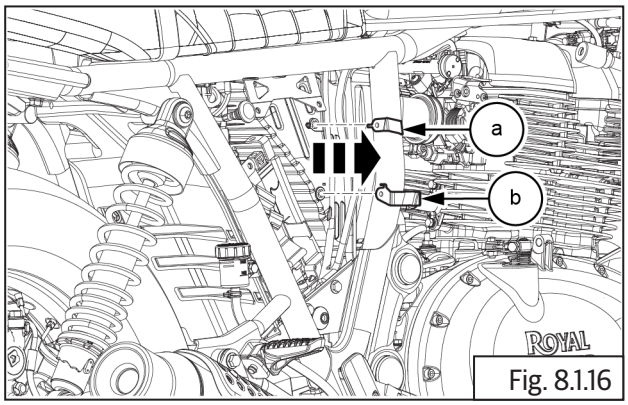

Fig. 8.1.16

- Disconnect hose from purge valve **(a)** to connector **(b)**.
- Disconnect hose **(c)** from connector to T-joint **(d)** near throttle body.

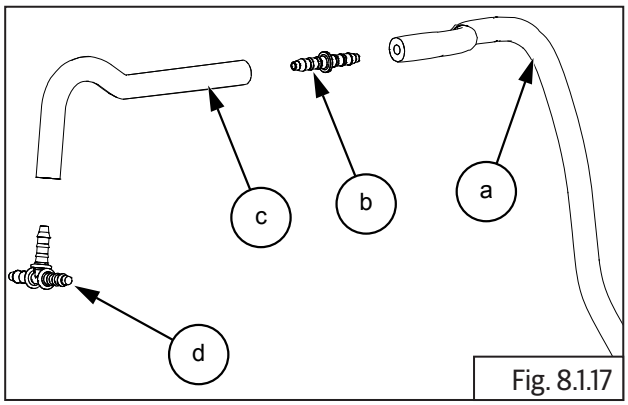

Fig. 8.1.17

- Disconnect 2 Nos. hoses from throttle body connecting to T-joint.

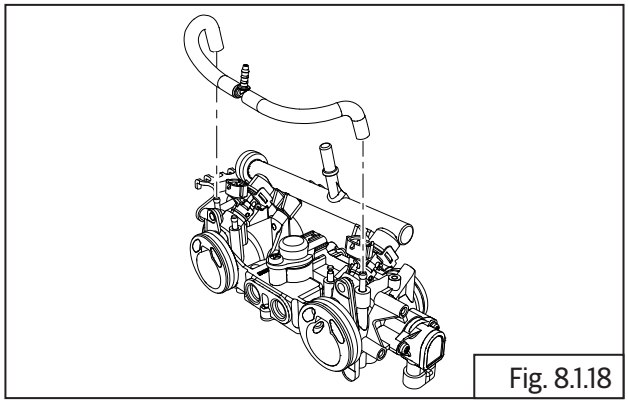
Fig. 8.1.18

NOTE
• *Separate the connector and T-joint from the hoses and store carefully.*

Inspection

8.1.4. Charcoal Canister

- Clean and inspect for any damage or crack on canister. Replace if necessary.
- Gently shake canister to feel if there is wet fuel inside. If suspected replace canister.
- Very low pressure air (12 kPa) through the inlet port and check for the free flow of outlet side. If restricted or no air, replace the canister.

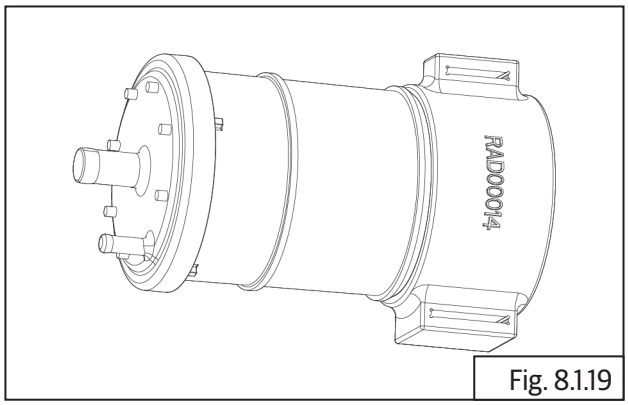

Fig. 8.1.19

8.1.5. Purge Valve

- Clean and visually inspect the EVAP purge valve for any damage or crack.
- check purge valve inspection procedure as in EMS Diagnostics manual chapter, replace if found defective.
- Blow low pressure air (12 kPa) through hose connecting to throttle body and check for pressure release through hose connecting to canister. If air releases, then purge valve is defective and needs replacement.

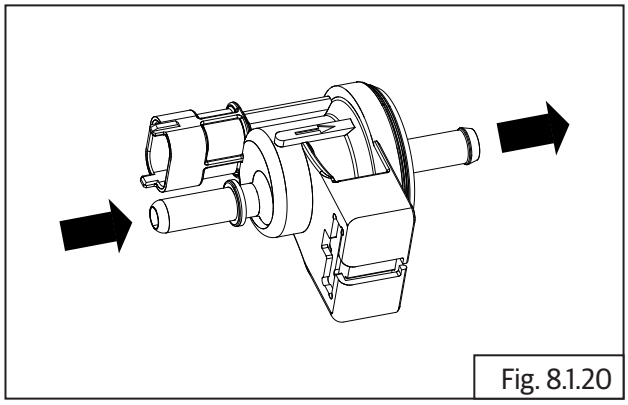

Fig. 8.1.20

8.1.6. Hoses

- Check hose for any crack, pinch, wear out or hardening. Replace if defective.
- Inspect hoses as mentioned in periodic maintenance schedule.

8.1.7. Hose Connectors

- Check for any damages or cracks and replace if defective.

Do's & Don'ts

- Do not fill fuel tank above anti-splash plate inside fuel tank as it will cause fuel to get into EVAP system.

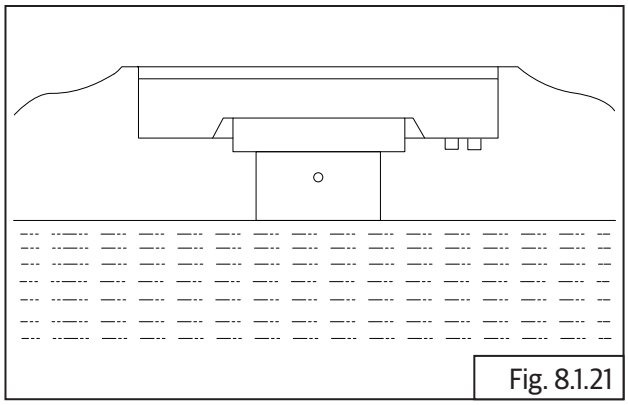

Fig. 8.1.21

- Do not use motorcycle if any part of EVAP system is damaged.
- Do check the EVAP system periodically for damages and leakages.

8.1.8. EVAP System Leak Test Procedure

- Ensure the systems hoses are connected correctly.
- Block the EVAP atmosphere breather.
- Block the LH side throttle body Hose, Purge.
- Connect a hose to the fuel tank to EVAP hose to allow a pressure to be applied.
- Connect another hose to the RH side throttle body Hose.
- Pressurise the system through both the Evap Canister atmosphere breather and the RH side throttle body Hose, Purge at the same time as below:
  1. Fill at 12kPa for 30 Seconds.
  2. Stabilize, 50 Seconds.
  3. Drop less than 300 Pa over 5 minutes.

Assembly

8.1.9. Hoses

- Connect 2 Nos hoses on either end of T-joint to throttle body and connect the other end of the hoses to the throttle body LH and RH.

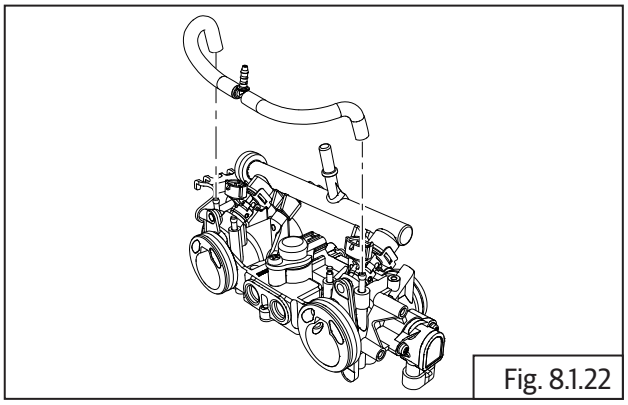

Fig. 8.1.22

- Locate connector **(b)** on the hose **(a)** going to purge valve.
- Connect small hose **(c)** to connector **(b)**.
- Connect T-joint **(d)** to small hose **(c)**.

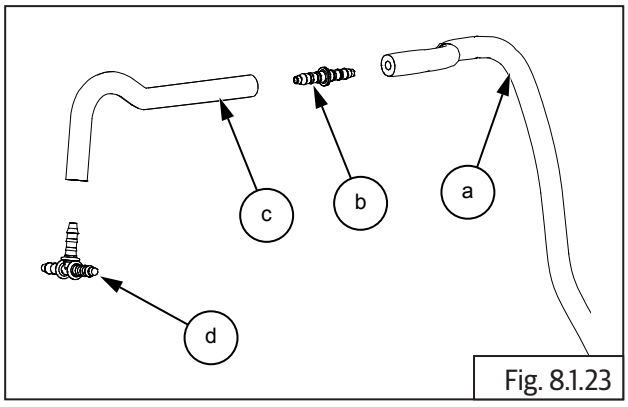

Fig. 8.1.23

- Install the top **(a)** and bottom **(b)** clamps on hose.

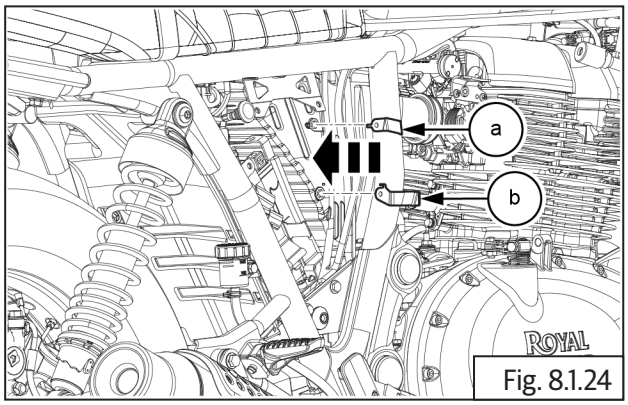

Fig. 8.1.24

- Locate and tighten the 2 Nos. pan head screws **(M5) (a)** on air filter box assembly RHS.

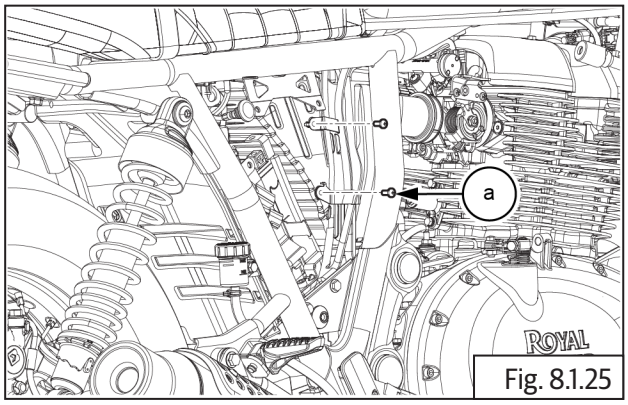

Fig. 8.1.25

	Screw driver (+)
	4- 6 N-m / 0.4 - 0.6 kgf-m

NOTE
• *Please ensure the EVAP hoses are routed properly and ensure they DO NOT get pinched or damaged.*

8.1.10. EVAP Purge Valve

- Insert the purge valve into the rubber boot.

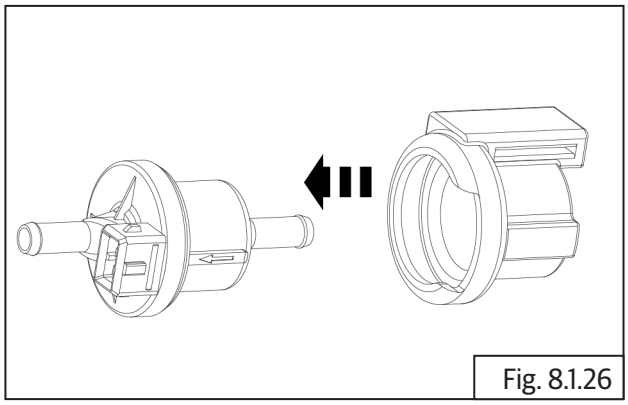
Fig. 8.1.26

- Slide the purge valve with rubber boot **(a)** into the bracket.

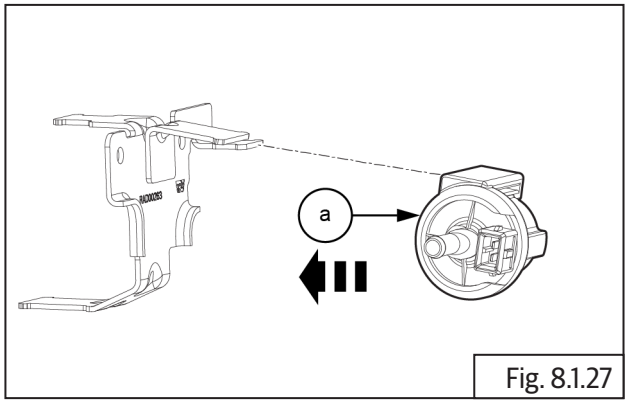

Fig. 8.1.27

- Connect the purge valve inlet **(b)** and outlet **(a)** hoses to the purge valve.

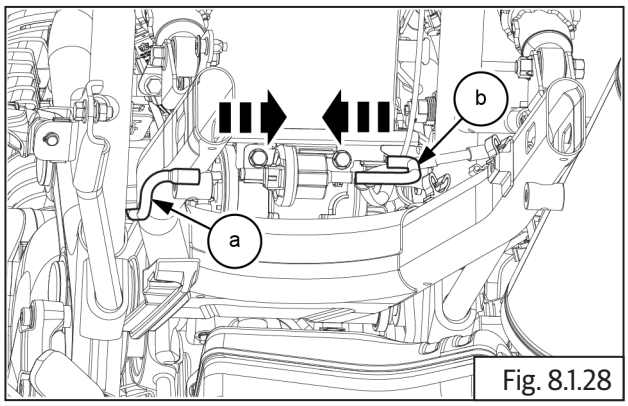

Fig. 8.1.28

- Connect the electrical connector **(a)** to the purge valve.

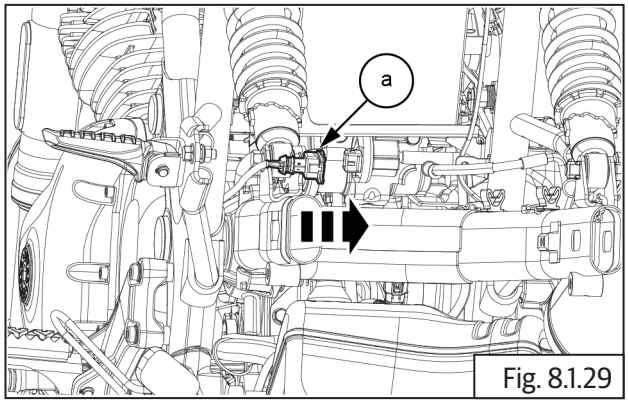

Fig. 8.1.29

- Assemble the following parts:
- Install the infill mudguard.(Refer_____)
- Install the rear mudguard.(Refer_____)
- Install the ECU.(Refer_____)
- Install the seat.(Refer_____)
- side panel LH.(Refer_____)
- Install the rider seat.(Refer_____)
- Install the side panel RH.(Refer_____)

8.1.11. Charcoal Canister

- Boot to seat between ribs on canister **(a).**

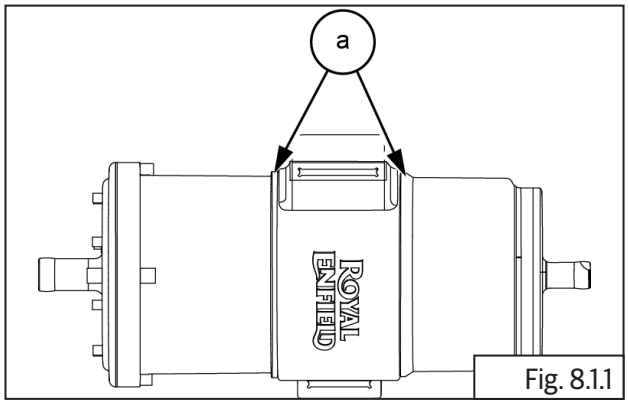

Fig. 8.1.1

- Boot large slot should be 18 deg angle of canister center. Refer Below image.

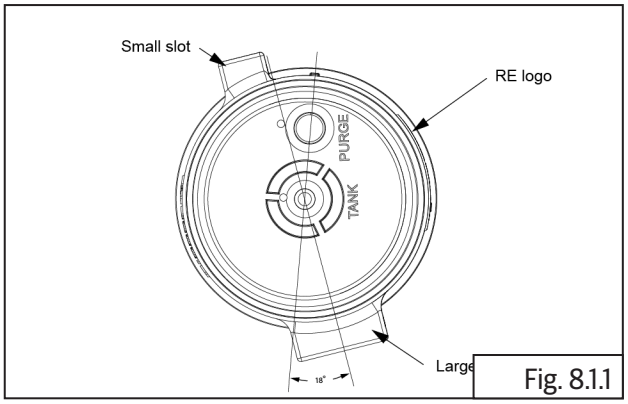

Fig. 8.1.1

- Slide and insert the canister with rubber boot into **(a)** the bracket.

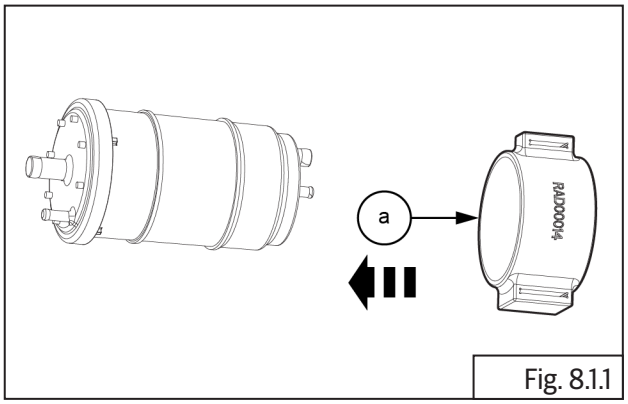

Fig. 8.1.1

- Slide and insert the bracket with purge valve **(a)** onto the canister.

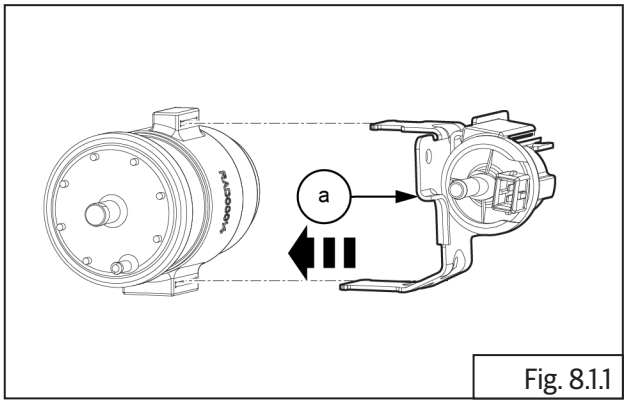

Fig. 8.1.1

- Locate the canister **(a)** on the chassis frame.

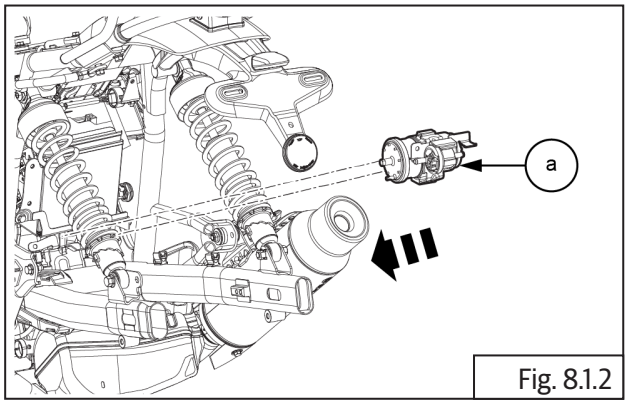

Fig. 8.1.2

- Tighten Hex flange head bolts 2 Nos **(M6) (a)** onto the EVAP canister bracket.

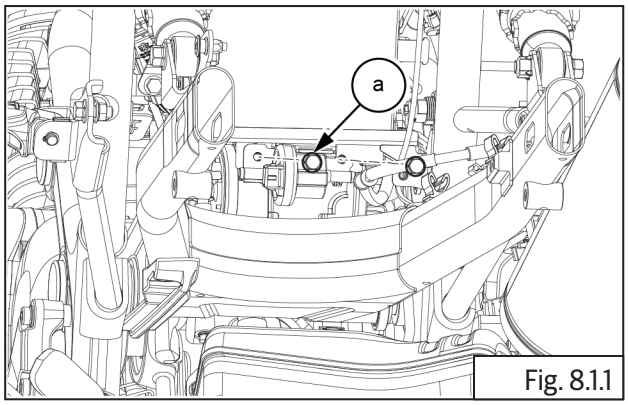

Fig. 8.1.1

	10 mm Socket with Ratchet
	9- 12 N-m / 0.9 - 1.2 kgf-m

- Connect the inlet valve **(b)** and outlet **(a)** hoses to the purge valve.

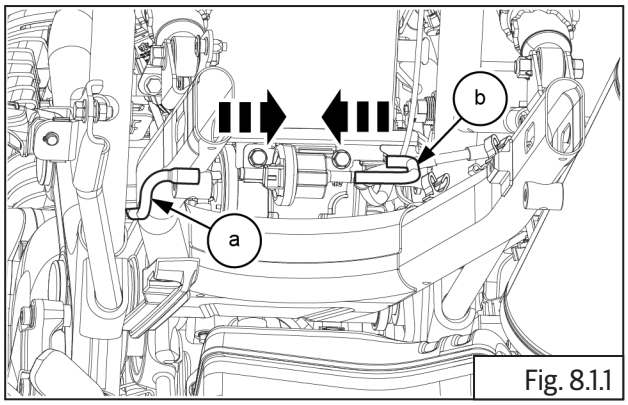

Fig. 8.1.1

- Connect the breather hose **(a)** and drain hose **(b)** to the EVAP.

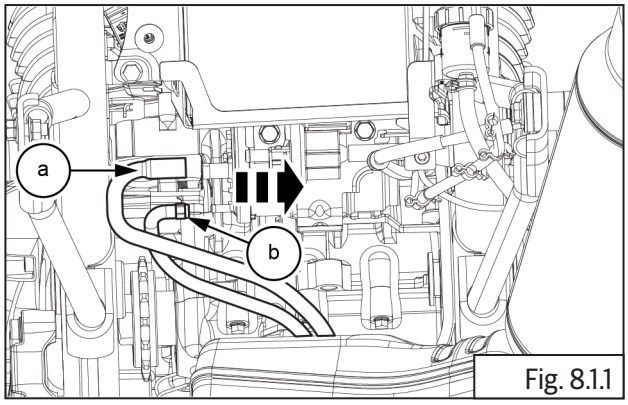

Fig. 8.1.1

- Connect the fuel tank to EVAP hose **(a)**.

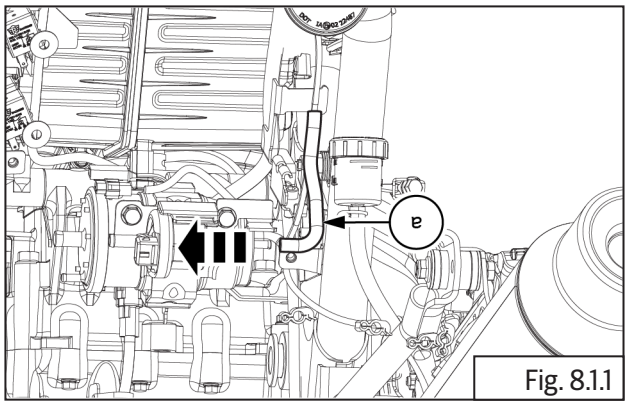

Fig. 8.1.1

- Connect EVAP connection hose **(a)** to fuel tank **(b)**.

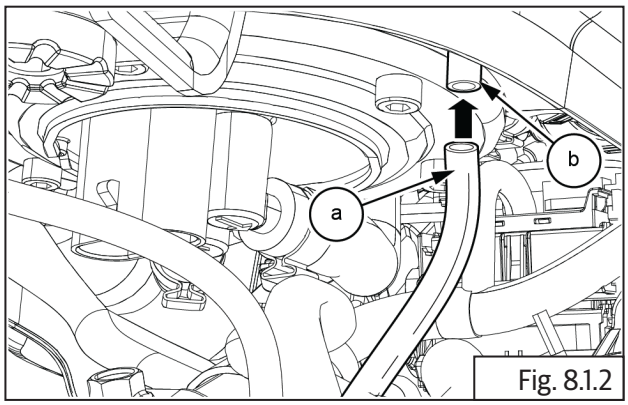

Fig. 8.1.2

- Connect the electrical connector **(a)** to the purge valve .

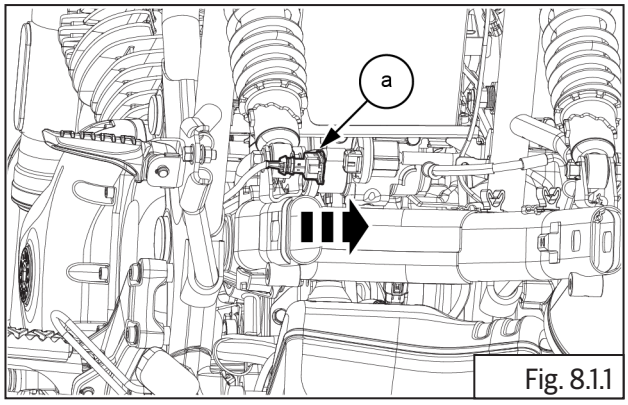

Fig. 8.1.1

8.1.12. EVAP Hose Routing Procedure

NOTE
• *Please ensure the EVAP hoses are routed properly and ensure they DO NOT get pinched or damaged.*

- Breather hose and drain hose pass through omega clips **(a)**and **(b)**,which inserts into frame.
- Ensure Drain plug **(c)** connected on the hose.

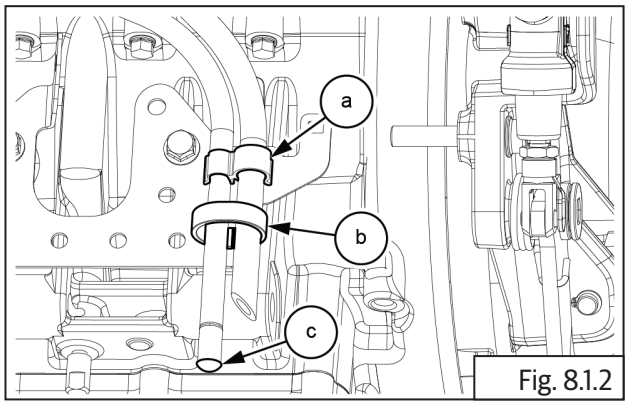

Fig. 8.1.2

- Throttle hose **(a)** from the Purge valve should be routed in between the Breather and Drain Hose.

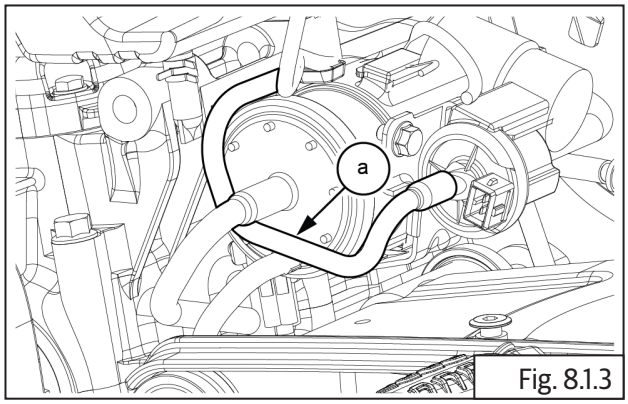

Fig. 8.1.3

- Throttle hose **(b)** and Fuel tank hose **(a)** should be routed through the clamp.

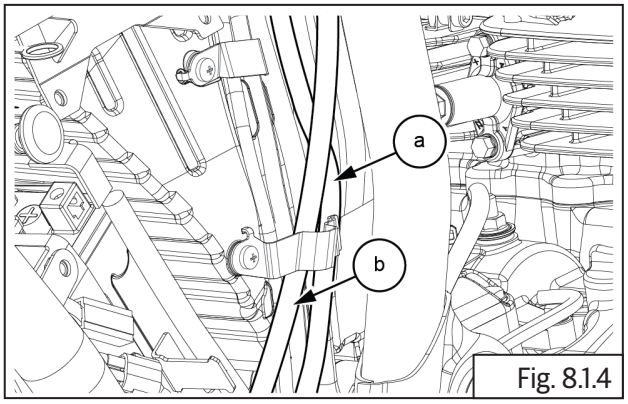

Fig. 8.1.4

- Hose clips **(a)** to be placed over the Purge hoses.

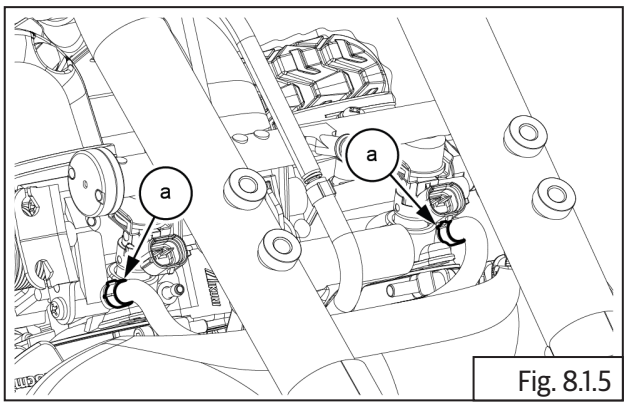

Fig. 8.1.5

- Assemble the following parts:
- Install the infill mudguard.(Refer_____)
- Install the rear mudguard.(Refer_____)
- Install the ECU.(Refer_____)
- Install the battery back into the frame. (Refer_____)
- Install the rear wheel.(Refer_____)
- Install the seat.(Refer_____)
- Install the RH and LH side panel.(Refer_____)
- Install the throttle body cover.(Refer_____)
- Connect the battery negative (-) terminal. (Refer_____)

BRAKES AND ABS

CONTENTS **PAGE**

9. Brakes and ABS 545

Dismantling 545

9.1. Brake - Front 545

9.1.1. Master Cylinder Assembly 545

9.1.2. Brake Caliper 547

9.1.3. Brake Disc 549

9.2. Brake - Rear 551

9.2.1. Master Cylinder 551

9.2.2. Brake Pedal 553

9.2.3. Fluid Reservoir 554

9.2.4. Brake Caliper 555

9.2.5. Brake Disc 557

Inspection 557

Assembly 560

9.3. Brake - Rear 560

9.3.1. Brake Disc 561

9.3.2. Brake Caliper 561

9.3.3. Master Cylinder 563

9.3.4. Brake Pedal 564

9.3.5. Fluid Reservoir 566

9.4. Brake - Front 567

9.4.1. Brake Disc 567

9.4.2. Brake Caliper 568

9.4.3. Master cylinder 570

9.5 Anti-lock Braking System (ABS) 573

9.5.1 Working Principle 573

9.5.2 Functions and Specifications 574

Dismantling 579

9.5.3. Modulator 579

CONTENTS **PAGE**

9.5.4. Wheel Speed Sensor - Front 583

9.5.5. Wheel Speed Sensor - Rear 584

Assembly 585

9.5.6. Wheel Speed Sensor - Rear 585

9.5.7. Wheel Speed Sensor - Front 586

9.5.8. Modulator 588

9.6. Bleeding the Hydraulic Brake System With DOLTool (Front & Rear) 594

9.6.1 Preparation (Front Disc Brake) 595

9.6.2 Reassembly 597

9.6.3 Preparation (Rear Disc Brake) 598

9.6.4 Reassembly 599

9.7. Brake Bleeding 600

9.7.1. Front Brake Bleeding 601

9.7.2. Front Brake Fluid Leakage 604

9.7.3. Front Brake Fluid Top up 605

9.7.4. Rear Brake Bleeding 606

9.7.5. Rear Brake Fluid Leakage 608

9.7.6. Rear Brake Fluid Top Up 609

9. Brakes and ABS

Dismantling

9.1. Brake - Front

NOTE
• *Ensure the motorcycle is upright on a firm and flat surface.* • *Before dismantling brake assembly, bleed out brake fluid . (Refer 9.7.brake bleeding chapter).*

⚠ WARNING
Avoid contact between brake fluid and painted parts. Brake fluid attacks paint.

⚠ CAUTION
Ensure ignition key and engine stop switch are in OFF position.

NOTE
• *If brake pads are being replaced, then it is not necessary to perform system bleeding.* • *Wheel should be dismantled only for brake disc plate removal.*

⚠ CAUTION
Whenever front brake caliper assembly is dismantled from front wheel, DO NOT depress brake lever as the piston in the caliper will move out/get misaligned. **DO NOT remove or disturb the wheel speed sensor on fork end LH.**

9.1.1. Master Cylinder - Front

⚠ WARNING
Avoid contact between brake fluid and painted parts. Brake fluid attacks paint.

⚠ WARNING
Skin Irritation - Brake fluid can cause skin irritation on contact. **Avoid contact with skin and eyes, and keep out of the reach of children.** **Wear suitable protective clothing and goggles.** **If brake fluid comes into contact with the eyes, flush the eyes thoroughly with water and consult a physician immediately.**

⚠ CAUTION
Brake fluid quickly ruins painted plastic surfaces; any spilled fluid should be completely washed away immediately.

⚠ CAUTION
Ensure the motorcycle is upright on a firm and flat surface.

- Locate a scissor jack **(a)** under the cradle frame and lift motorcycle such that the front wheel is off the ground by minimum 6 inches (or 15 cm).

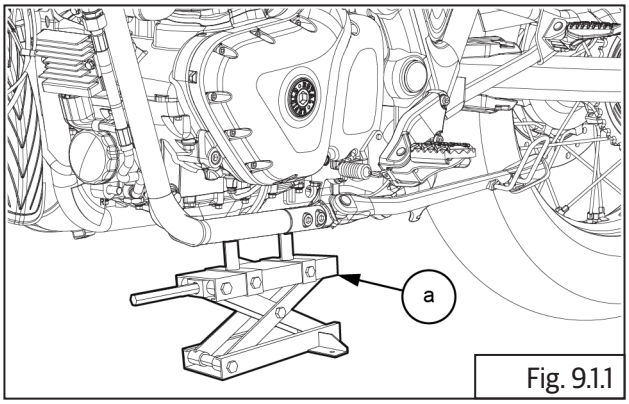

Fig. 9.1.1

- Before dismantling brake assembly, bleed out brake fluid. (Refer-------).
- Remove the following part: (Refer-------)
- Rear view mirror from handlebar RH. (Refer-------)

⚠ CAUTION

Ensure master cylinder assembly is supported carefully while disconnecting.

- Disconnect brake lamp switch connectors **(a)** from front brake switch **(b)**.

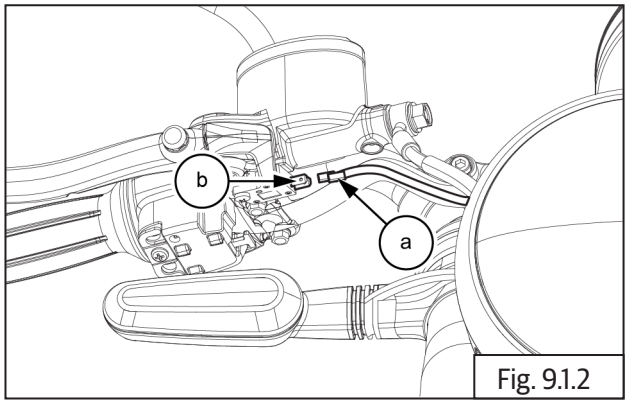

Fig. 9.1.2

⚠ CAUTION

Ensure master cylinder assembly is supported after removing.

- Loosen and remove banjo bolt **(a)** and disconnect hose **(b)**.

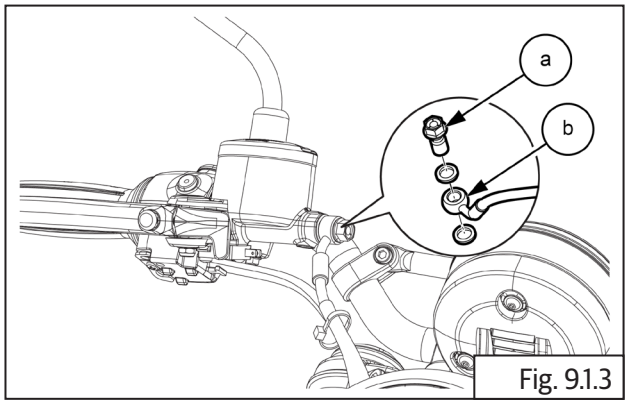

Fig. 9.1.3

	12 mm Socket with Ratchet

- Loosen and remove 2 Nos. Hex bolts **(M5) (a)** along with clamp and remove master cylinder assembly from handlebar RH.

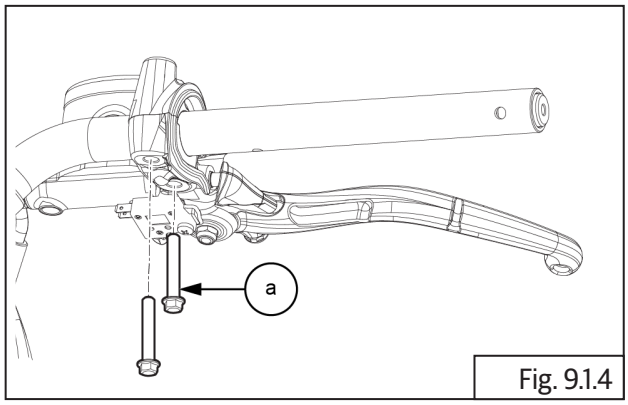

Fig. 9.1.4

	8 mm Socket with Ratchet

- Hold screw **(b)** at the top of brake lever, loosen and remove hex nut **(M6) (a)** at the bottom.
- Unscrew and remove top screw holding brake lever to master cylinder and remove brake lever.

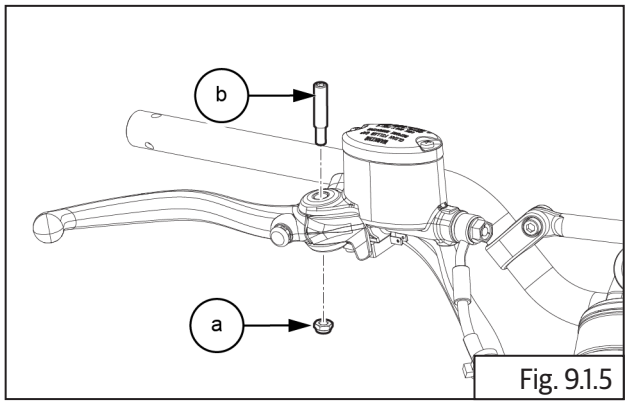

Fig. 9.1.5

	4mm Allen socket and 10 mm Socket with Ratchet

Dismantling Master Cylinder Front

- Remove boot **(a)** from the master cylinder assembly.

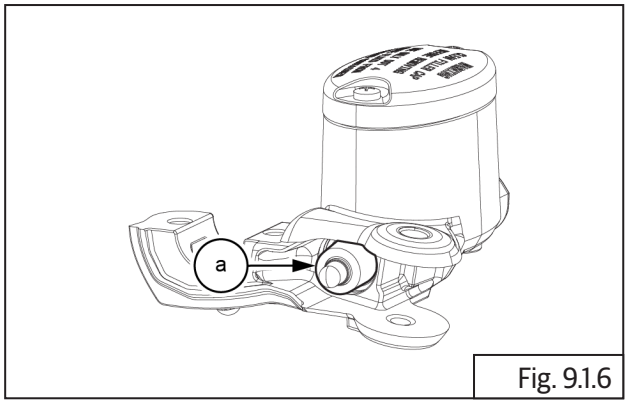

Fig. 9.1.6

	Screw driver

- Remove circlip **(a)** from the master cylinder assembly.

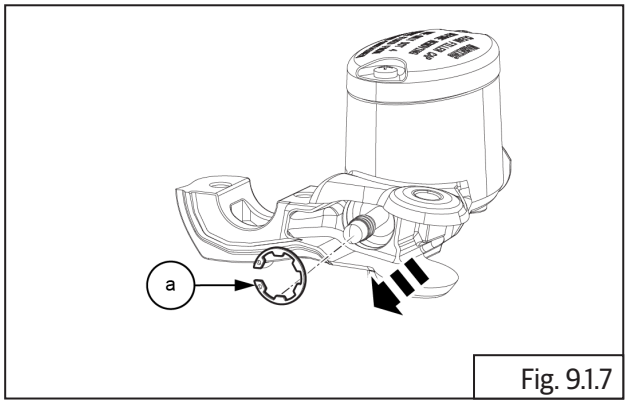

Fig. 9.1.7

	Inner Circlip plier

- Remove the conical spring (piston compression spring) **(a)** from piston **(b)**.

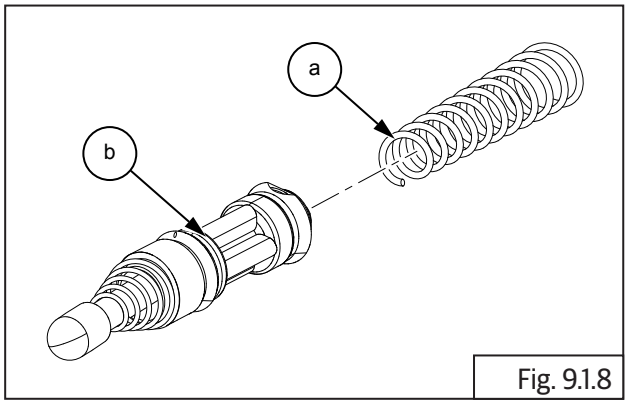

Fig. 9.1.8

9.1.2. Brake Caliper - Front

NOTE
• *If the caliper is to be disassembled after removal and if compressed air is not available, disassemble the caliper before the brake hoses are removed.*

- Loosen and remove banjo bolt **(a)** and disconnect hose **(b)** from front caliper on front fork LH.

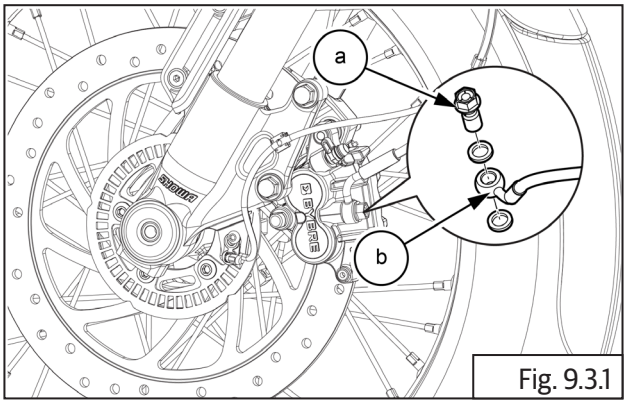

Fig. 9.3.1

	12 mm Ring spanner

NOTE
• *When removing the brake hose, take care not to spill the brake fluid on the painted or plastic parts.* • *When removing the brake hoses, temporarily secure the end of the brake hose to some high place to keep fluid loss to a minimum.*

- Support the front brake caliper assembly suitably.

- Loosen and remove 2 Nos upper and lower Hex flange head bolts **(M10) (a)** to remove front brake caliper assembly from LH fork.

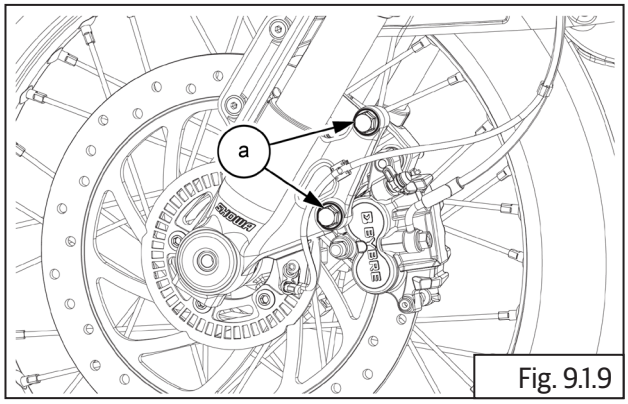

Fig. 9.1.9

	14 mm Socket with Ratchet

- Gently slide out front brake caliper assembly from front LH fork.
- Remove brake pad lock clip **(a)** from brake caliper assembly **(b)**.

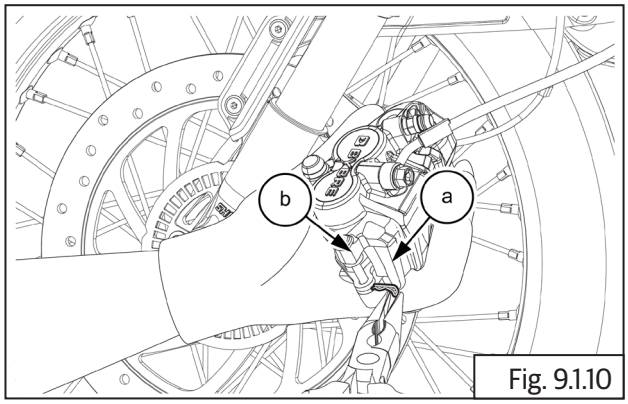

Fig. 9.1.10

	Nose plier

- Suitably support caliper and correctly tap brake pad pin **(a)** from inner side to outside.
- Once pin **(a)** is free gently pull out pin from brake caliper.

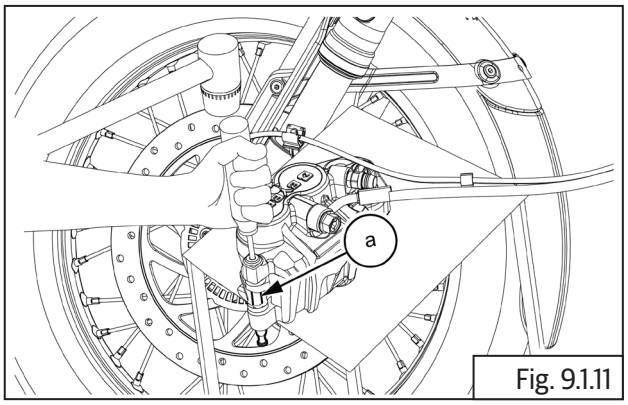

Fig. 9.1.11

	Punch and Hammer

- Slide out and remove brake pads **(a)** from brake caliper front **(b)**.

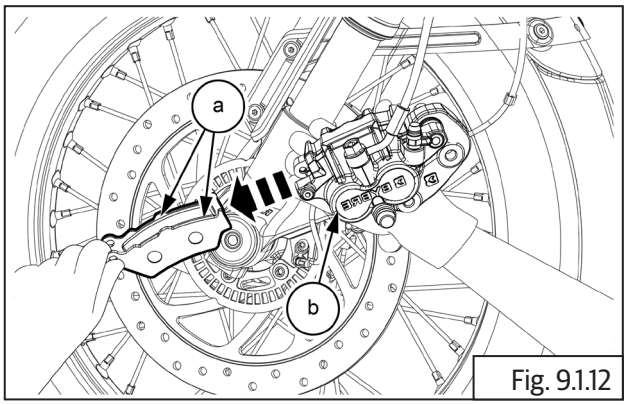

Fig. 9.1.12

Dismantling Front Brake Caliper

- Remove the pad tensioner spring plate **(a)**.

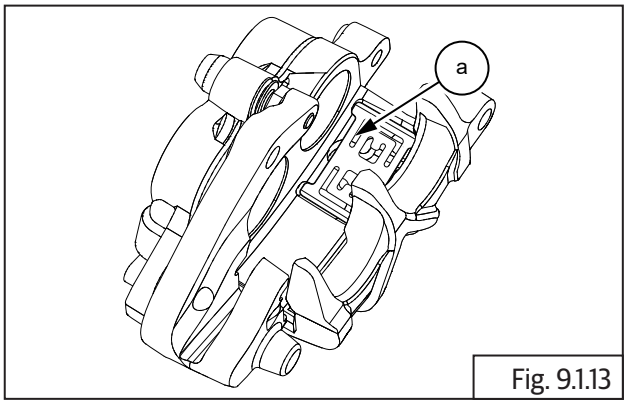

Fig. 9.1.13

- Remove mounting bracket from caliper assembly.

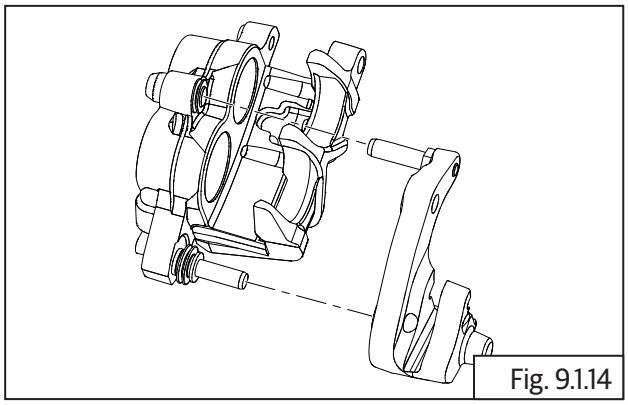

Fig. 9.1.14

- Position caliper body with the pistons down and apply small squirts of air pressure through fluid inlet hole to remove pistons.

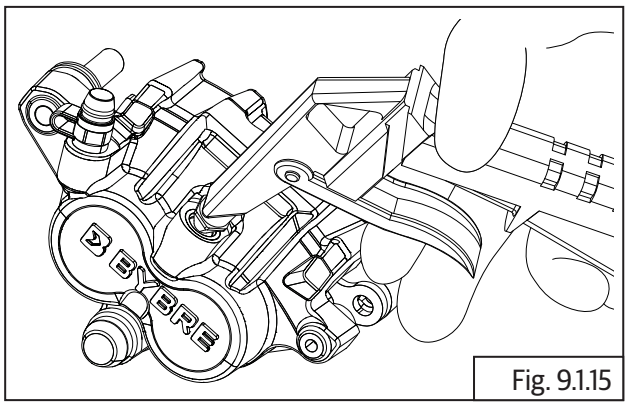

Fig. 9.1.15

⚠ WARNING

To avoid serious injury, never place your fingers or palm in front of the piston. If you apply compressed air into the caliper, the piston may crush your hand or fingers.

⚠ CAUTION

Do not use high pressure air or bring the nozzle too close to the inlet. Place a shop towel over the pistons to prevent the pistons from becoming projectiles. Push the dust seals and piston seals in and lift them out using a blunt tool. Care should be taken to avoid any damages on the bore of the sliding surface.

Enough care should be taken to avoid damages of the piston OD while servicing/handling. Remove the bleed screw.

- Remove the pistons **2Nos (a)** from caliper.
- Remove dust seals **2Nos (b)** from caliper.
- Remove fluid seals **2Nos (c)** from caliper.

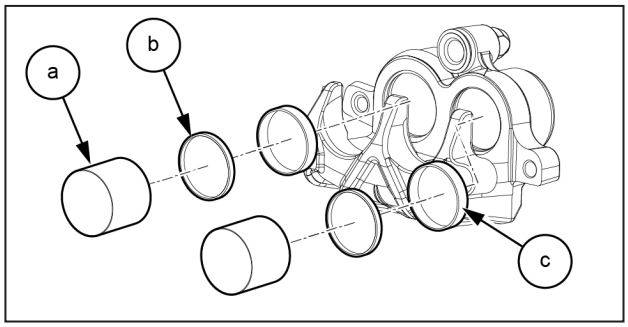

9.1.3. Brake Disc - Front

- Remove front wheel. (Refer-------).
- Ensure wheel assembly is placed on a flat surface with disc plate facing upwards. (Refer-------).

⚠ CAUTION

Ensure wheel hub does not get damaged.

⚠ WARNING

DO NOT place/store the wheel with disc facing downward. It will damage and change disc warpage.

⚠ CAUTION

Place a soft cloth under the wheel hub center mounting hole area to prevent damage.

- Loosen and remove **5 Nos** Hex socket head bolts **(M8) (a)** holding disc plate to hub, in crisscross pattern.

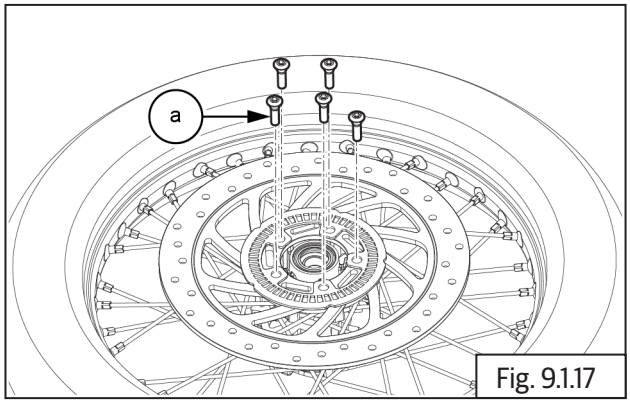

Fig. 9.1.17

	6 mm Allen socket with Ratchet

- Remove toner wheel front **(a)** from hub and store carefully.

⚠ CAUTION

Avoid any bends or damages to the toner wheel as it will affect the functioning of ABS.

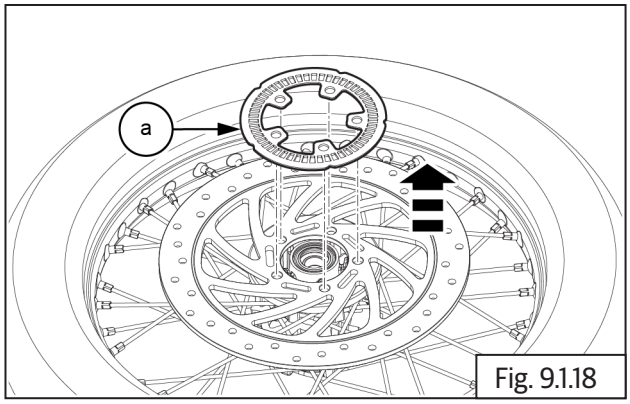

Fig. 9.1.18

- Remove front brake disc **(a)** from hub and store carefully.

⚠ CAUTION

Ensure the brake disc does not get damaged as it will affect the brake efficiency.

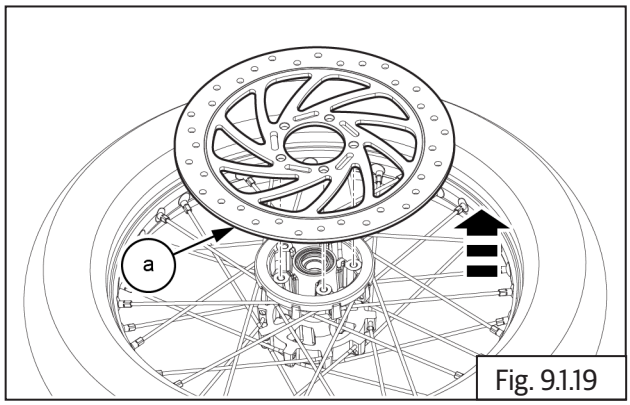

Fig. 9.1.19

- Gently remove damper rubber **(a)** from the hub.

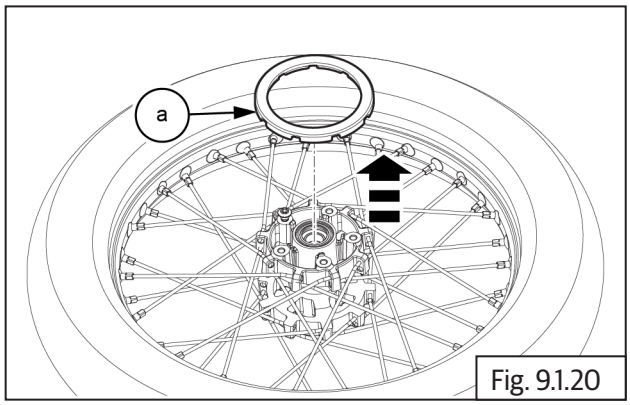

Fig. 9.1.20

9.2. Brake - Rear

⚠ CAUTION

Ensure the motorcycle is upright on a firm and flat surface.

Support motorcycle with suitable equipment below swing arm frame.

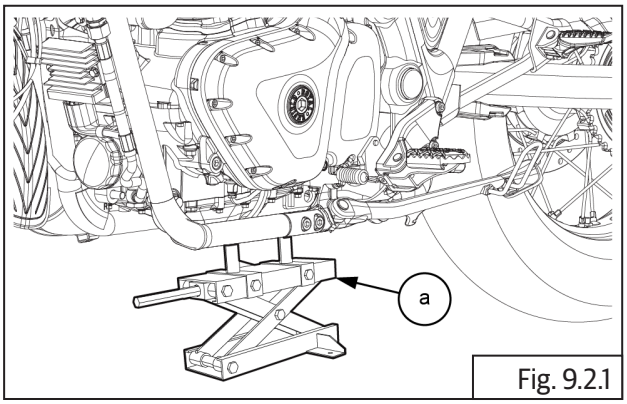

Fig. 9.2.1

9.2.1. Master Cylinder - Rear

- Disconnect brake lamp connector **(a)** from main wiring harness on motorcycle RH.
- Remove wire from rear mudguard infill cover **(b).**

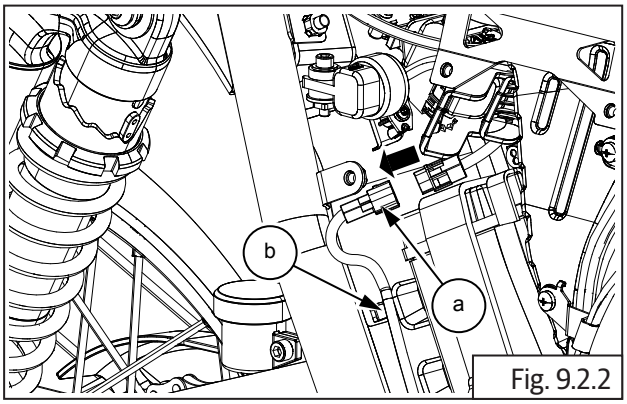

Fig. 9.2.2

- Loosen and remove 2 Nos cap bolts **(M6) (a)** from master cylinder .

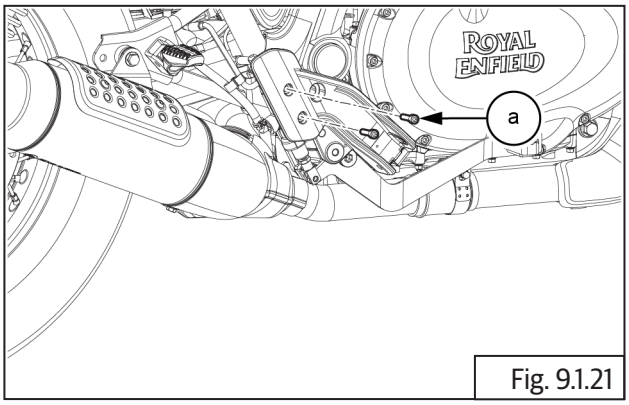

Fig. 9.1.21

	5 mm Allen Socket with Ratchet

- Remove the brake hose clip **(a)** from brake fluid hose.

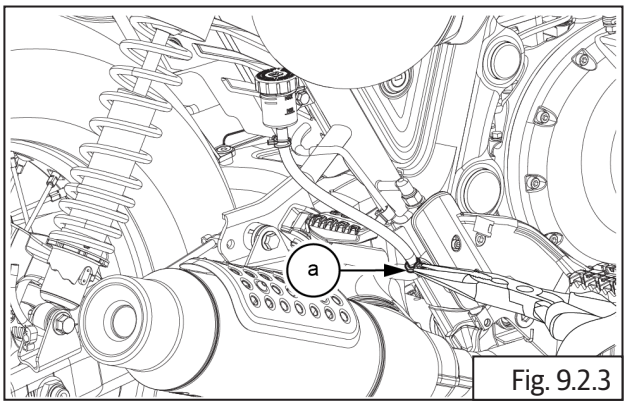

Fig. 9.2.3

	Plier

- Collect brake fluid in container.

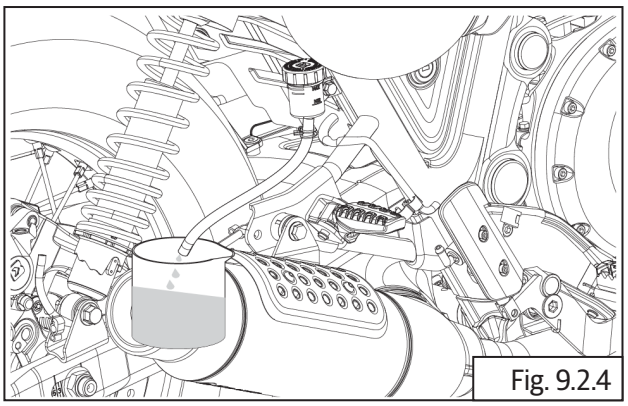

Fig. 9.2.4

- Remove split pin **(a)** from clevis pin located at the bottom of master cylinder assembly.

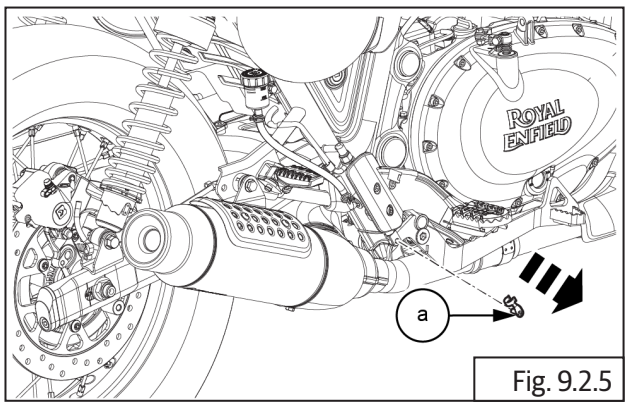

Fig. 9.2.5

	Nose plier

- Remove banjo bolt **(a)** and the hose **(b)** from the rear Master cylinder.

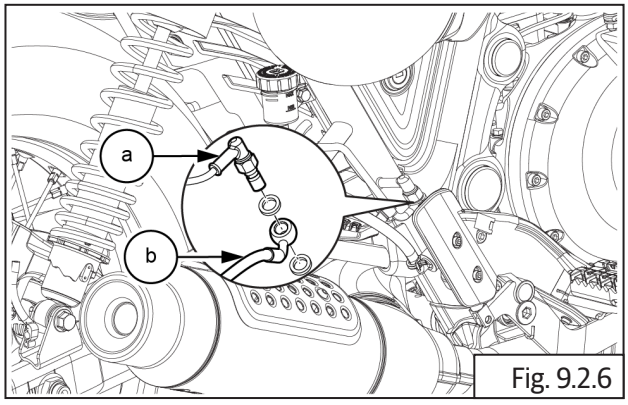

Fig. 9.2.6

	14 mm Double end spanner

- Remove the master cylinder **(a)** from the vehicle.

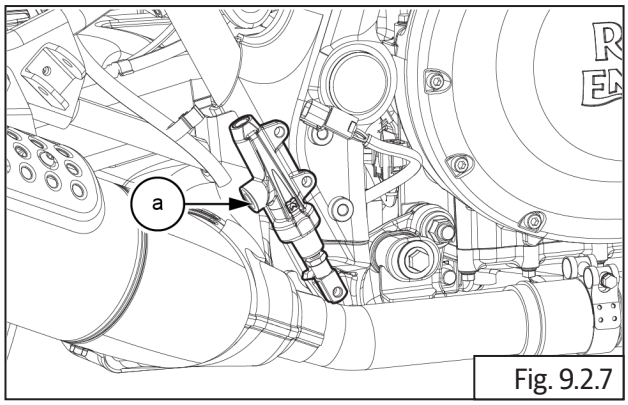

Fig. 9.2.7

Dismantling Rear Brake Master Cylinder

- Remove protective rubber boot from master cylinder.

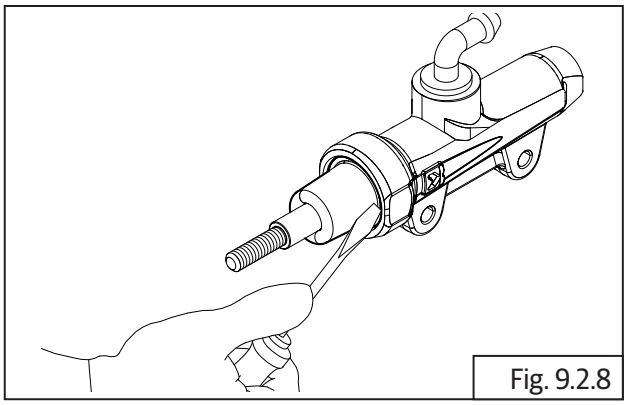
Fig. 9.2.8

	Screw driver

- Remove **(a)** circlip from the master cylinder body **(b)** slowly and carefully.

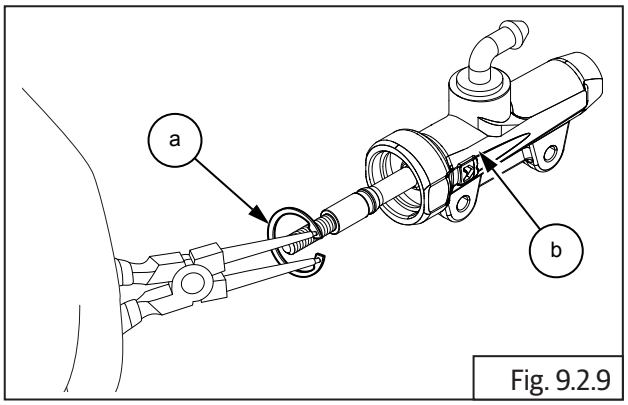

Fig. 9.2.9

	Circlip plier

- Gently pull out bush **(a)** with piston **(b)**, seals, spring guide and conical spring from master cylinder housing **(c)**.

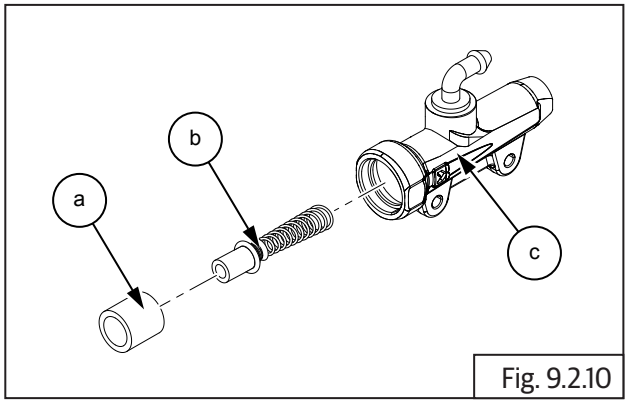

Fig. 9.2.10

⚠ CAUTION

Do not use any sharp tool to pull out the piston from the master cylinder. Pull out gently with minimum force.

9.2.2. Rear Brake Pedal

- Loosen and remove 2 Nos cap bolts **(M6) (a)** from master cylinder .

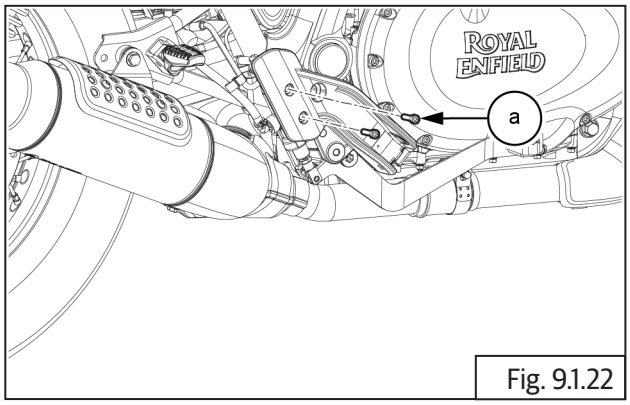

Fig. 9.1.22

	5 mm Allen Socket with Ratchet

- Loosen and remove 2 Nos cap bolts **(M8) (a)** from control plate .

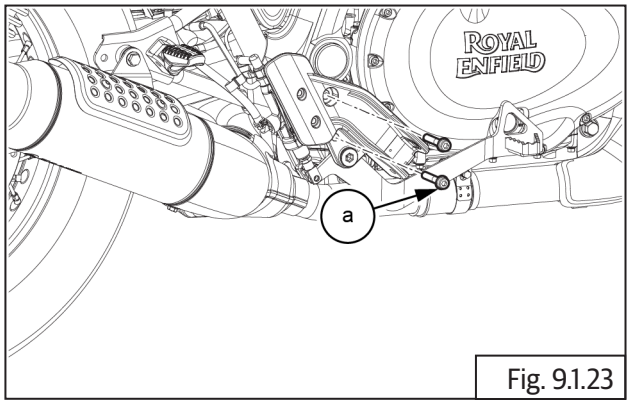

Fig. 9.1.23

	6 mm Allen Socket with Ratchet

- Remove the control plate with brake pedal **(a)** from frame.

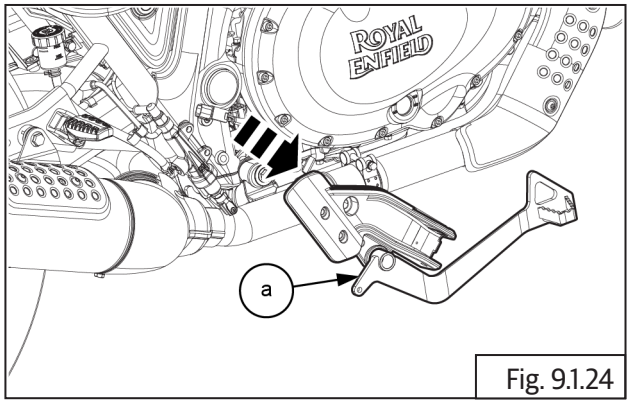

Fig. 9.1.24

- Remove pivot pin **(b)** from brake pedal **(a)**.
- Remove brake pedal **(a)** along with bush **(c)** and spring **(d)** from control plate.

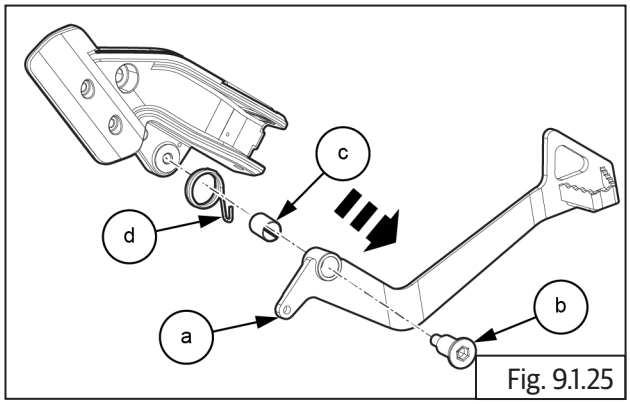

Fig. 9.1.25

	8 mm Allen Socket with Ratchet

9.2.3. Rear Fluid Reservoir

- Open the cap **(a)** from reservoir **(b)**.

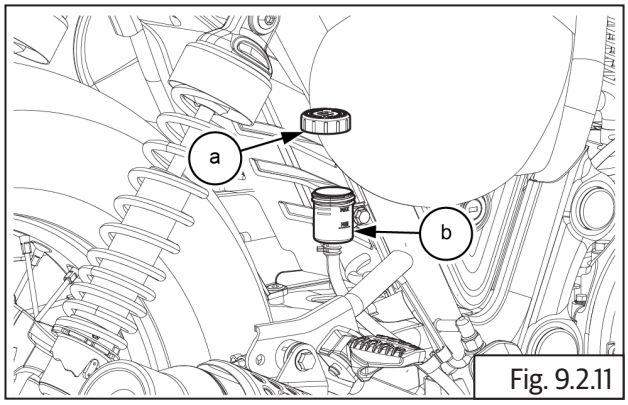

Fig. 9.2.11

- Loosen and remove Hex socket bolt **M6 (a)** to remove fluid reservoir.

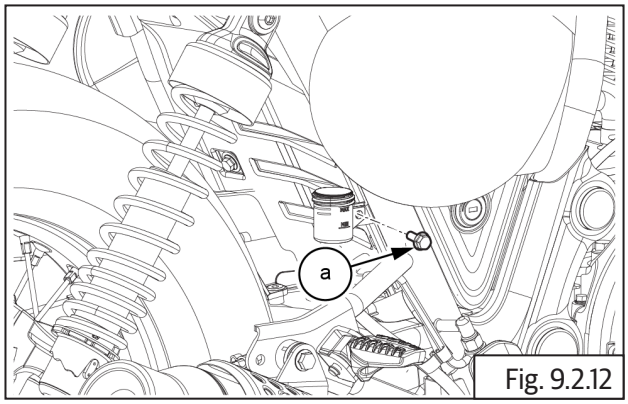

Fig. 9.2.12

	10 mm socket with Ratchet

- Slide the clip **(a)** from reservoir.

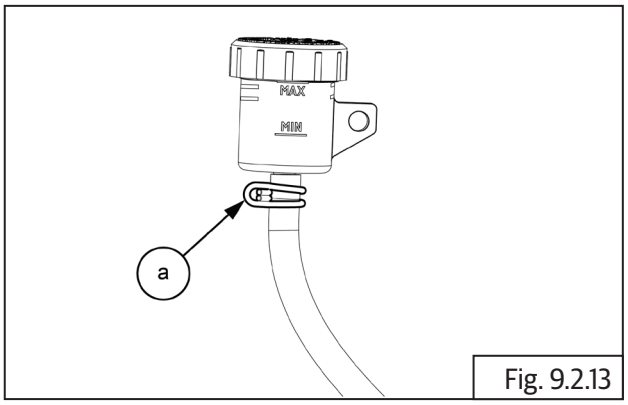

Fig. 9.2.13

	Nose Plier

- Detach the hose **(a)** from reservoir.

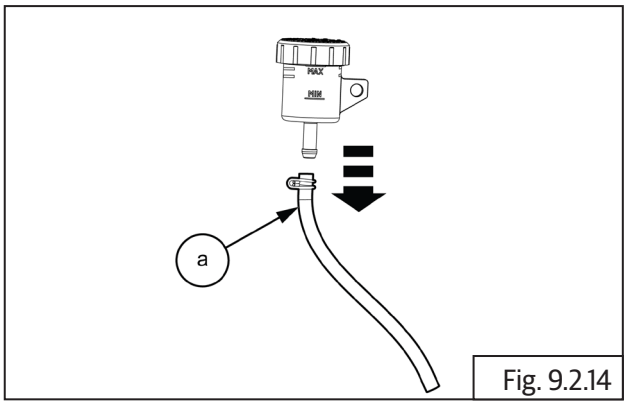

Fig. 9.2.14

9.2.4. Brake Caliper - Rear

- Remove the following:
  - Swing arm bolt, spindle and chain adjuster assembly from rear wheel. (Refer-------)
- Loosen and remove Hex socket head screw **(M6) (a)** located below brake caliper on RH rear wheel.

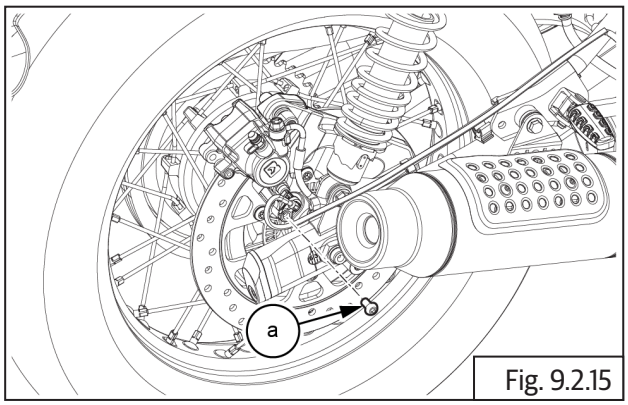

Fig. 9.2.15

	4 mm Allen socket with Ratchet

- Gently remove rear wheel speed sensor ABS **(a)** with shim **(b)** from rear wheel hub.

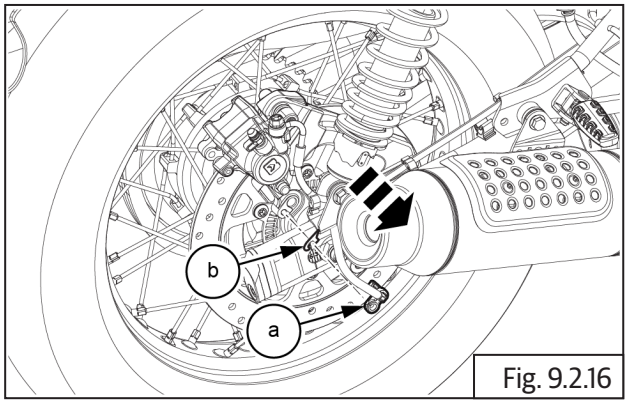

Fig. 9.2.16

- Remove brake pad outer clip **(a)** from brake pad lock pin.

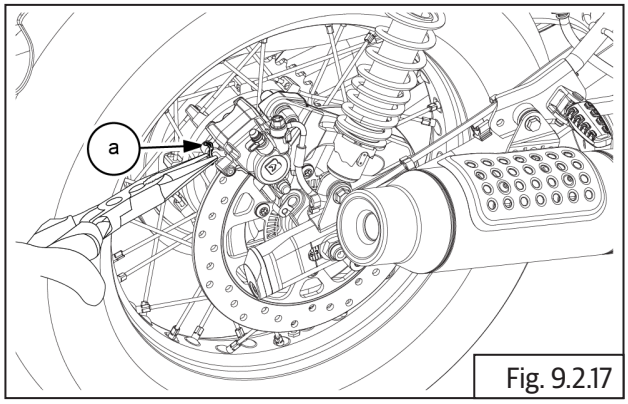

Fig. 9.2.17

	Nose plier

- Remove brake pad lock pin **(a)** from brake caliper.

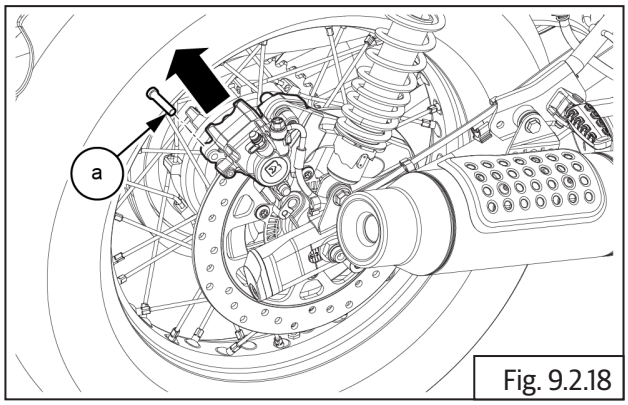

Fig. 9.2.18

	Nose plier

- Slide out and remove brake pads **(a)** from brake caliper.

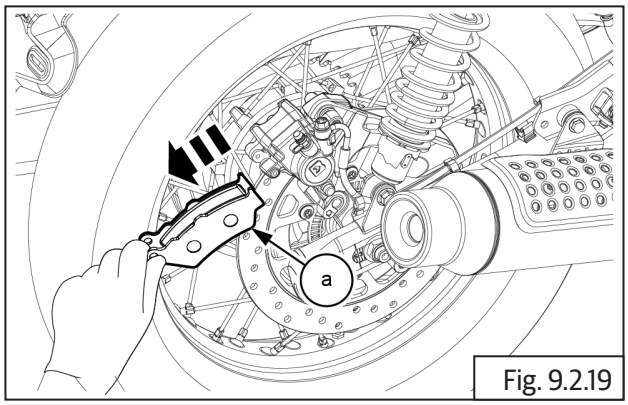

Fig. 9.2.19

NOTE

• If the caliper is to be disassembled after removal and if compressed air is not available, disassemble the caliper before the brake hose is removed.

- Slide out and remove brake caliper with holder.

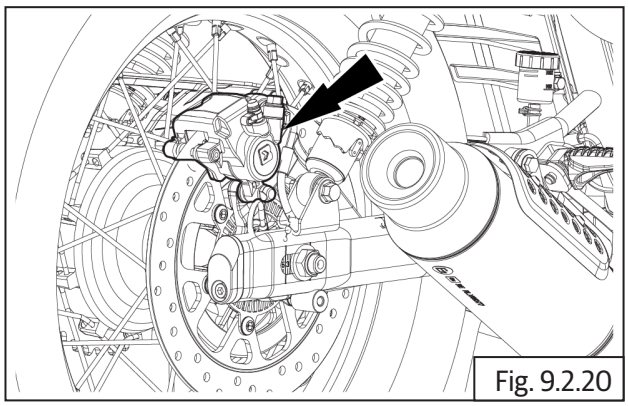

Fig. 9.2.20

Dismantling Rear Brake Caliper

- Separate the mounting bracket from the caliper assembly by gently pulling them apart.

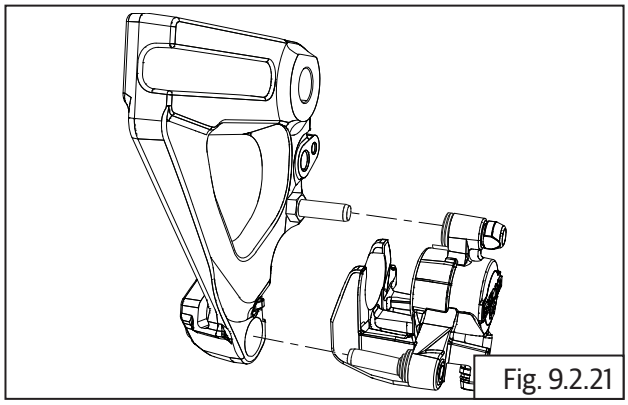

Fig. 9.2.21

- Position caliper body with pistons down and apply small squirts of air pressure to the fluid inlet hole to remove pistons.

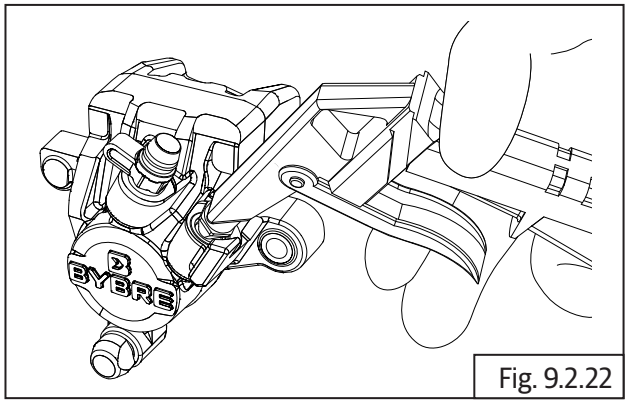

Fig. 9.2.22

⚠ WARNING

To avoid serious injury, never place your fingers or palm in front of the piston. If you apply compressed air into the caliper, the piston may crush your hand or fingers.

⚠ CAUTION

Do not use high pressure air or bring the nozzle too close to the inlet. Place a shop towel over the pistons to prevent the pistons from becoming projectiles. Push the dust seals and piston seals in and lift them out using a blunt tool. Care should be taken to avoid any damages on the bore of the sliding surface.

Enough care should be taken to avoid damages of the piston OD while servicing/handling. Remove the bleed screw.

- Remove the pistons **(a)** from caliper.
- Remove dust seals **(b)** from the caliper.
- Remove fluid seals **(c)** from the caliper.

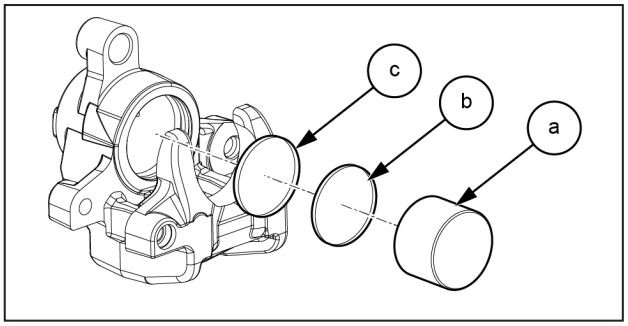

9.2.5. Brake Disc - Rear

- Remove drive chain and rear wheel from swing arm.
- Loosen and remove **6 Nos** Hex head button socket screws **(M8) (a)** to remove ABS toner wheel.

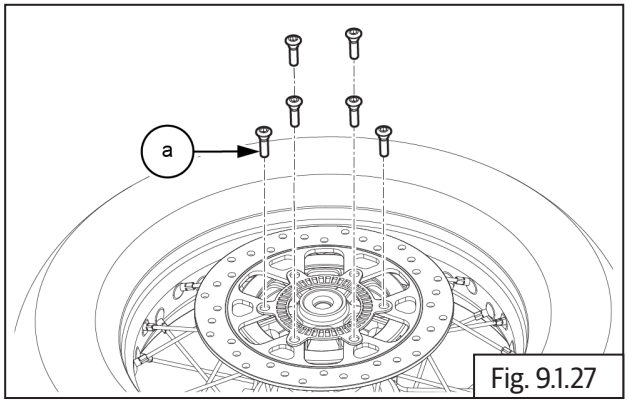

Fig. 9.1.27

	6 mm Allen socket with Ratchet

- Remove ABS toner wheel **(a)** from rear wheel RH.

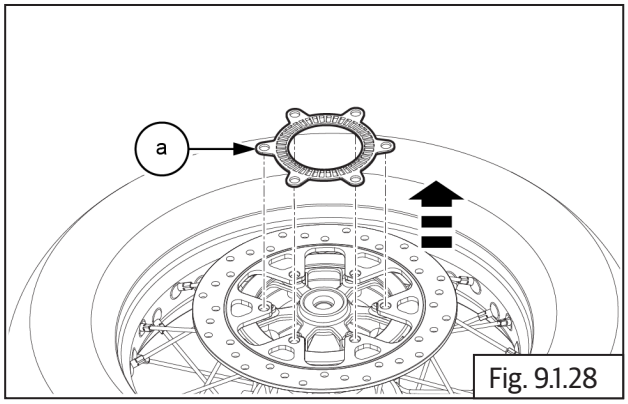

Fig. 9.1.28

- Remove rear brake disc **(a)** from the rear wheel hub .

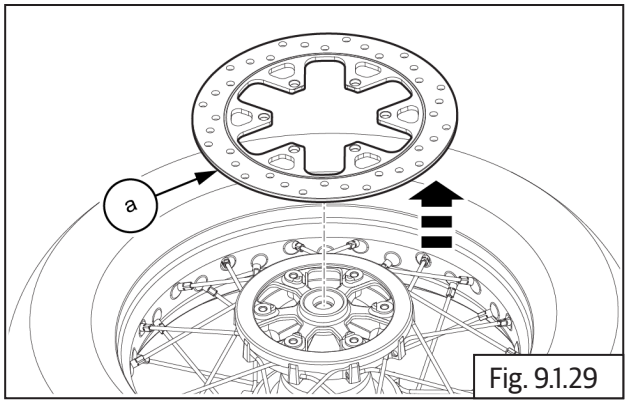

Fig. 9.1.29

- Gently remove damper rubber **(a)** from rear wheel hub.

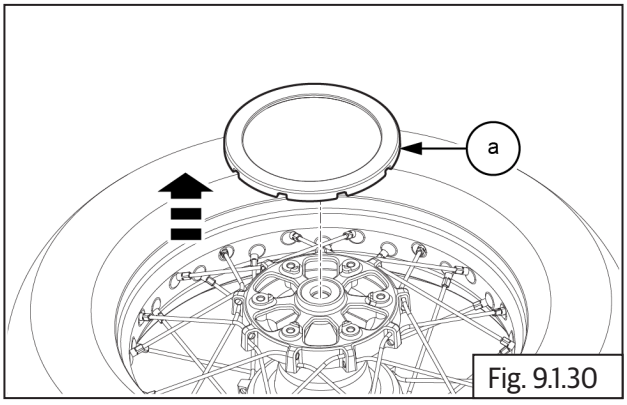

Fig. 9.1.30

Inspection

Front Wheel and Brake Disc

- Inspect for rust, deep scoring, any foreign materials, burn marks,cracks in the mounting location of brake disc.
- Inspect brake disc thickness and run-out. Measure depth at points where scoring is found on the discs and replace if there is excess wear.
- Also measure thickness at the points indicated in the illustration and replace disc if out of specifications.

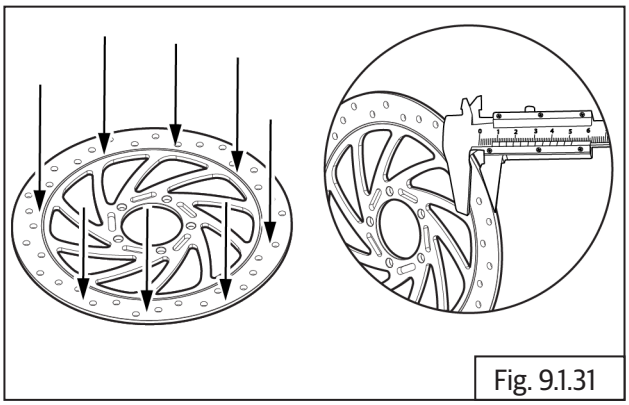
Fig. 9.1.31

	Vernier caliper

Service limit:	5.4mm

- Place brake disc rotor on a flat surface and inspect warpage. Replace if it is out of specifications.

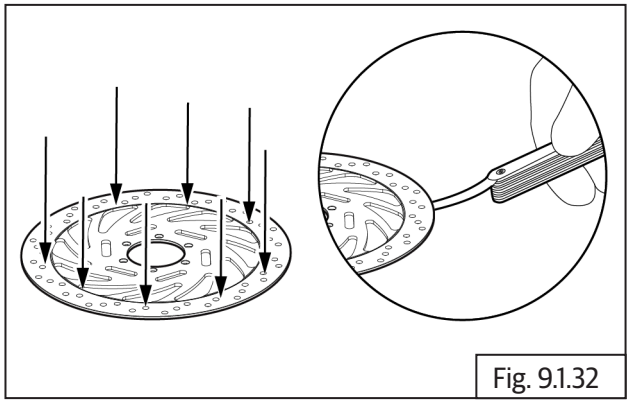

Fig. 9.1.32

	Feeler gauge

Standard:	0.00mm
Service limit:	0.3mm

- Inspect ABS toner wheel for any bends or damages.
- Place ABS toner wheel on a flat surface and check warpage. Replace if out of specifications.

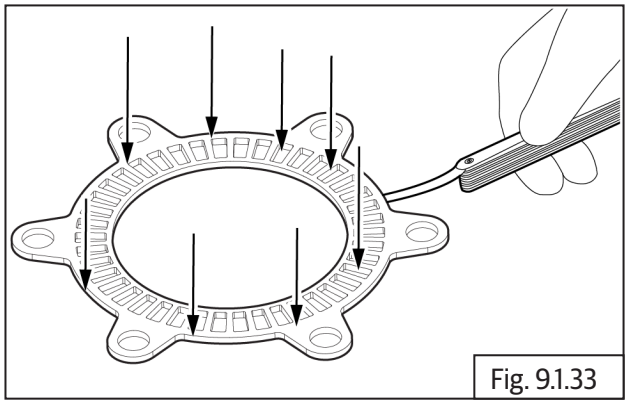

Fig. 9.1.33

	Feeler gauge

Standard:	0.00 mm
Service limit:	0.3 mm

- Inspect and replace toner wheel plate if there are any damages or bends.

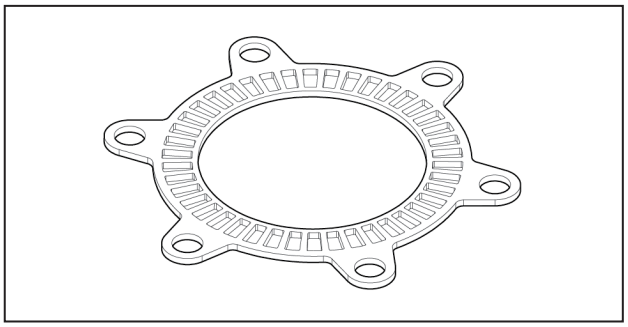

Rear Wheel and Brake Disc

- Inspect ABS toner wheel for any bends or damages.
- Place ABS toner wheel on a flat surface and check warpage. Replace if out of specifications.

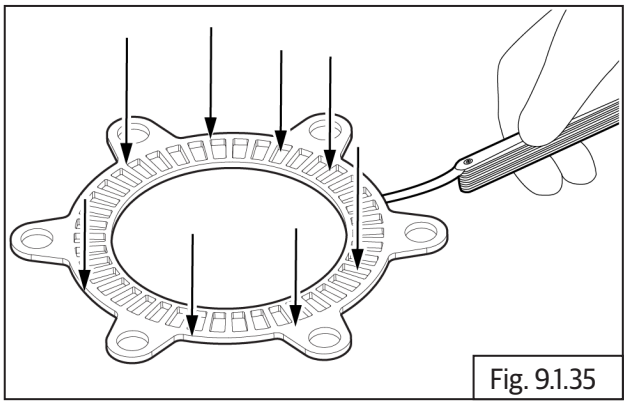

Fig. 9.1.35

	Feeler gauge

Standard:	0.00 mm
Service limit:	0.3 mm

- Inspect for rust, deep scoring, any foreign materials, burn marks crack in the mounting location of brake disc.
- Inspect brake disc thickness and run-out. Measure depth at points where scoring is found on the discs and replace if there is excess wear.
- Also measure thickness at the points indicated in the illustration and replace disc if out of specifications.

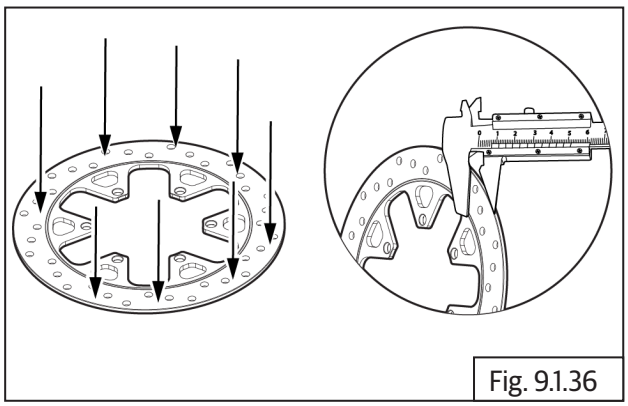

Fig. 9.1.36

	Vernier caliper

Service limit:	4.5 mm

- Place brake disc rear on a flat surface and check warpage. Replace if out of specifications.

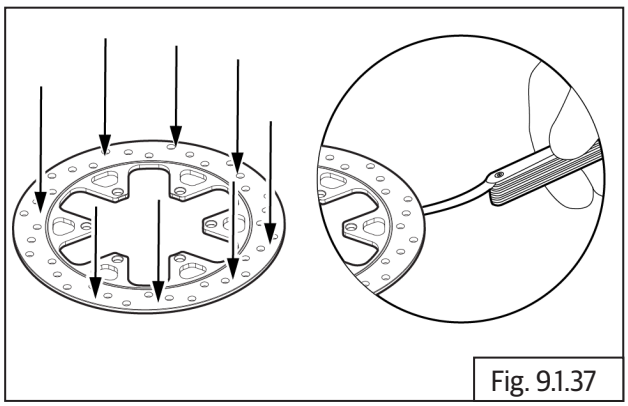

Fig. 9.1.37

	Feeler gauge

Standard:	0.00 mm
Service limit:	0.05 mm

⚠ CAUTION

Run-out of brake disc should be checked only when brake disc is assembled on wheel hub.

- Inspect brake pad thickness- front and rear. Replace if worn-out.

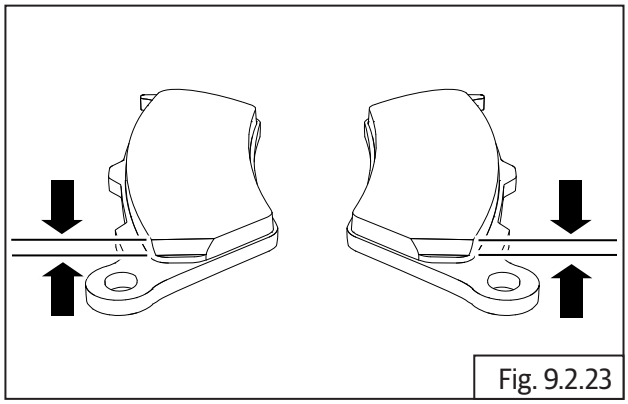

Fig. 9.2.23

- Check brake fluid level and top up if line is below 'MIN' level .

Front

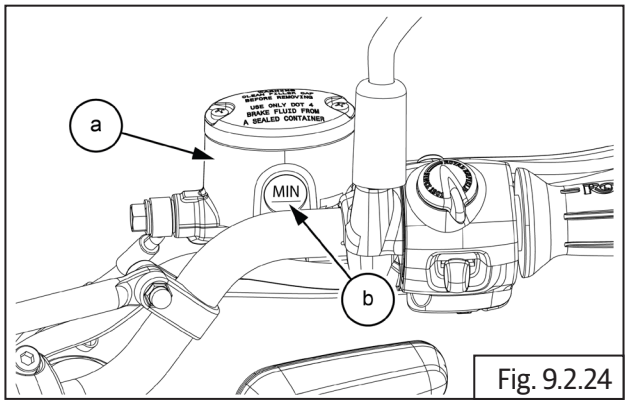

Fig. 9.2.24

Rear

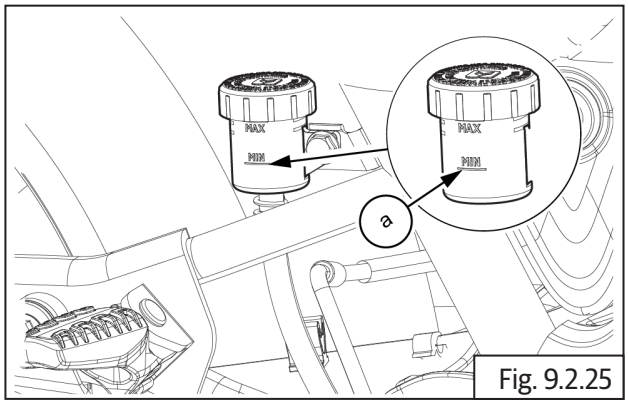

Fig. 9.2.25

⚠ CAUTION

DO NOT mix DOT 4 and other brake fluids together

- Inspect brake lever front free play and brake pedal rear free play. If free play is spongy, check brake pads for wear or tear and replace and follow brake bleeding procedure.

Front

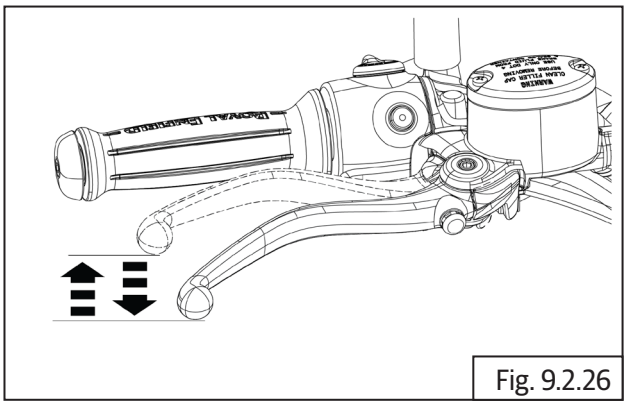

Fig. 9.2.26

Rear

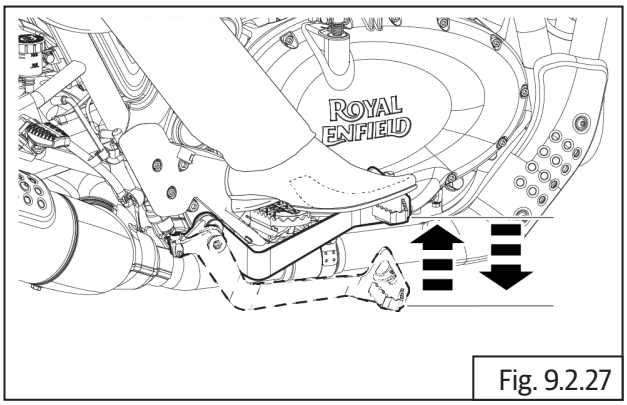

Fig. 9.2.27

- Inspect and replace front and rear brake hoses **(a)** if they have any cracks, leakages or damages.

Front

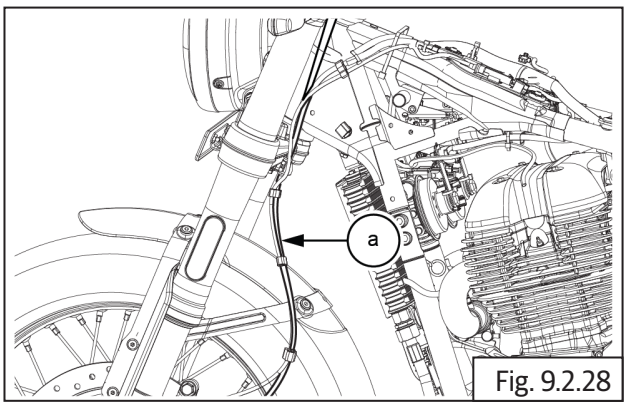

Fig. 9.2.28

Rear

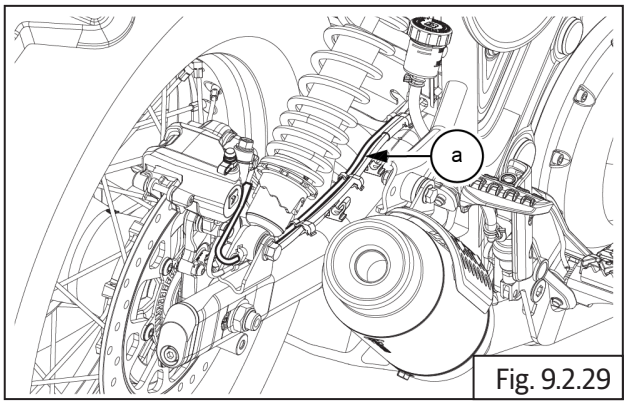

Fig. 9.2.29

Assembly

9.3.Brake - Rear

9.3.1. Brake Disc - Rear

- Install the damper rubber **(a)** on rear wheel hub.

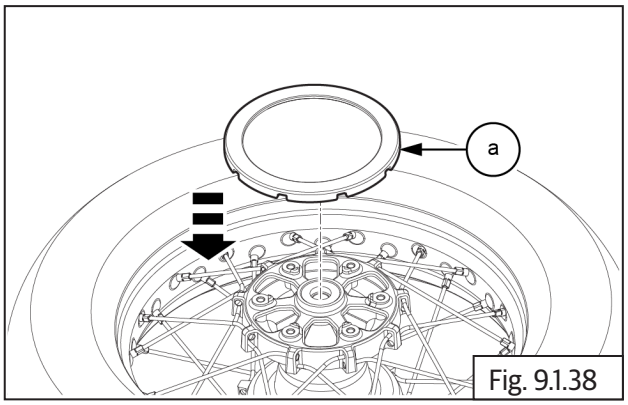

Fig. 9.1.38

- Assemble rear brake disc **(a)** into rear wheel hub RH.

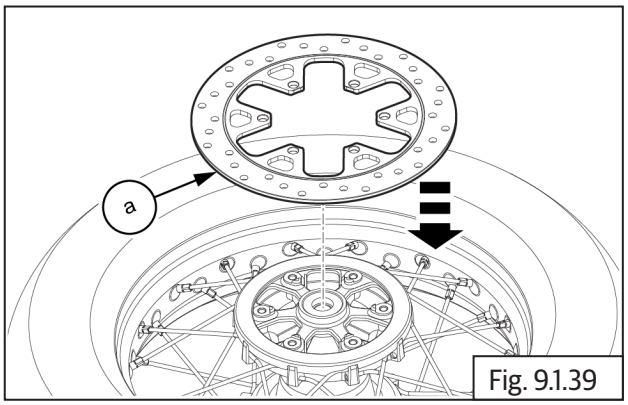

Fig. 9.1.39

- Assemble ABS toner wheel **(a)** into rear brake disc on rear wheel RH.

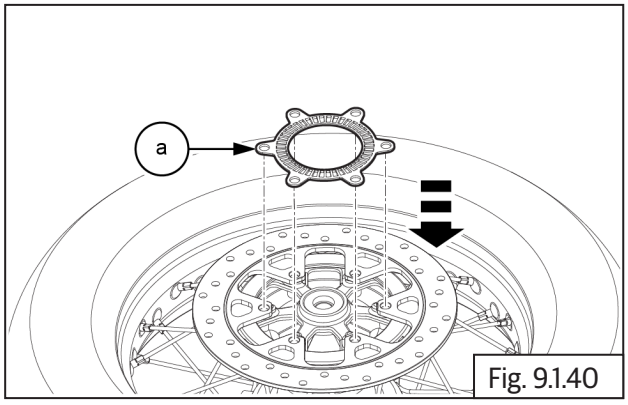

Fig. 9.1.40

- locate and tighten **6 Nos**. Hex head button socket screws **(M8) (a)** into rear wheel disc hub RH.

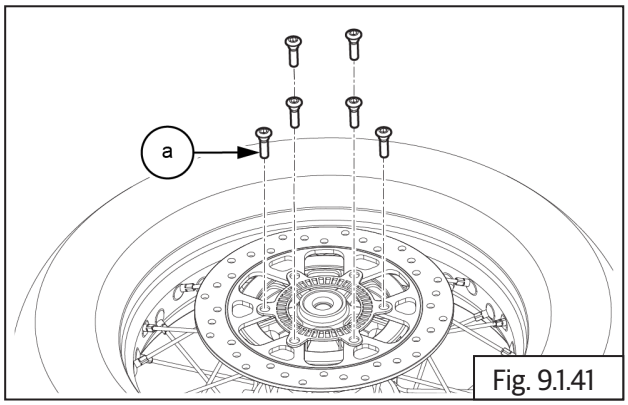

Fig. 9.1.41

	6 mm Allen socket with Ratchet
	32-36 Nm / 3.2 - 3.6 kgf-m

- Assemble drive chain and rear wheel into swing arms. (Refer-------)

9.3.2. Brake Caliper - Rear

Assembling Rear Brake Caliper

- Coat fresh brake fluid on new dust seals and piston seals.
- Install piston seals in the inner groove **(a)** and dust seals in the outer groove **(b)** in the bore in caliper assembly.

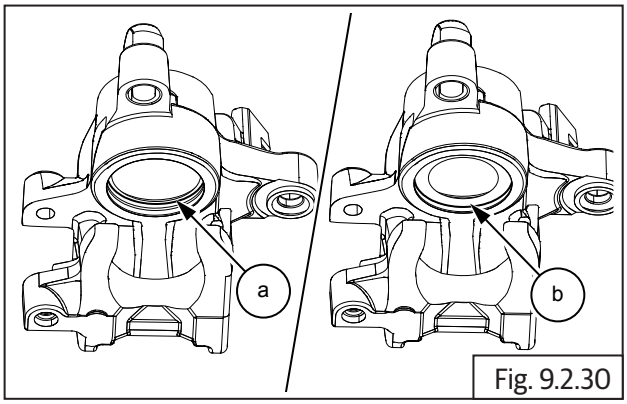

Fig. 9.2.30

- Coat the caliper cylinder and piston with fresh brake fluid.
- Insert the closed end of the piston **(a)** into the caliper bore and gently press it into caliper fully till the open ends of the piston are flush with the caliper bore outer edge

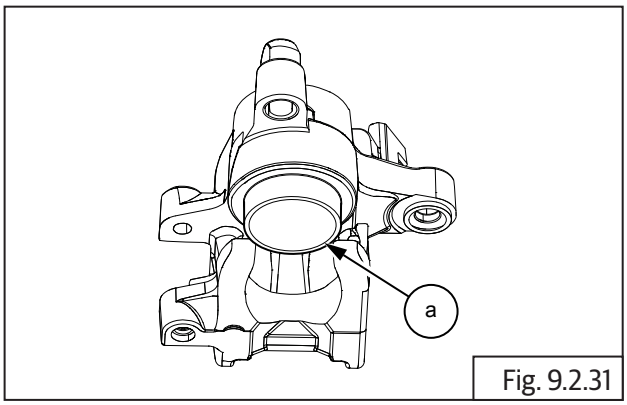

Fig. 9.2.31

⚠ CAUTION

DO NOT apply force while assembling the piston into the caliper. Press only with minimal hand pressure.

- Assemble the rubber grommets **(a)** on the bracket mounting area of the caliper.

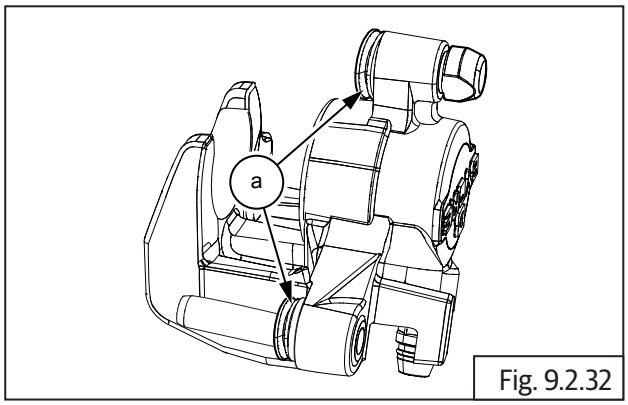

Fig. 9.2.32

- Locate bracket **(a)** on the caliper **(b)** and gently press caliper into bracket fully.

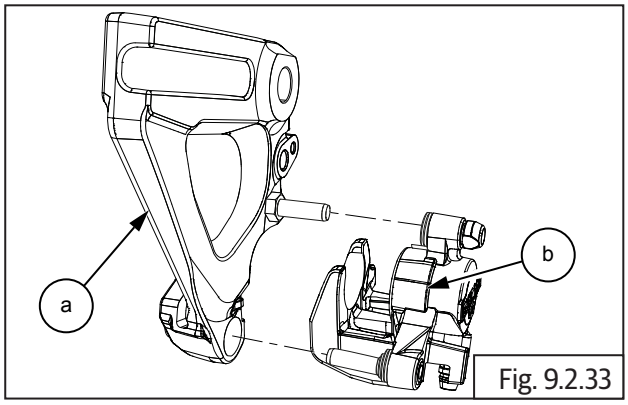

Fig. 9.2.33

- Install the pad tension spring plate **(a)** in the Caliper body.

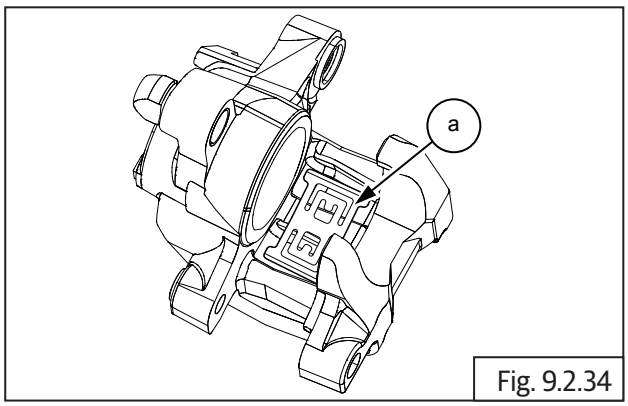

Fig. 9.2.34

- Assemble Bleed screw **(a)** with the dust cap on the caliper body.

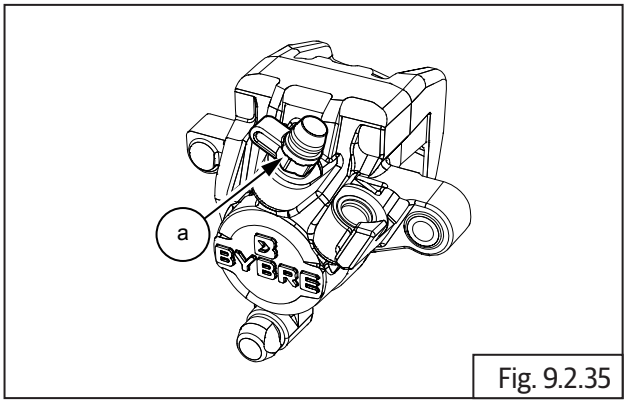

Fig. 9.2.35

- Gently locate brake caliper with holder onto brake disc.

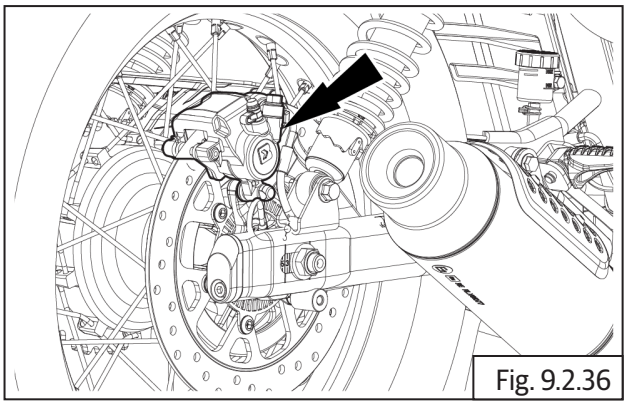

Fig. 9.2.36

Rear Brake Pads in Wheel Caliper

- Gently locate brake pads **(a)** into brake caliper.

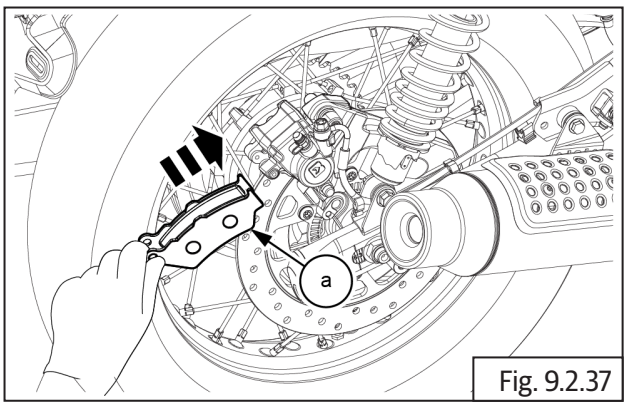

Fig. 9.2.37

- Locate brake pad lock pin **(a)** into brake caliper.

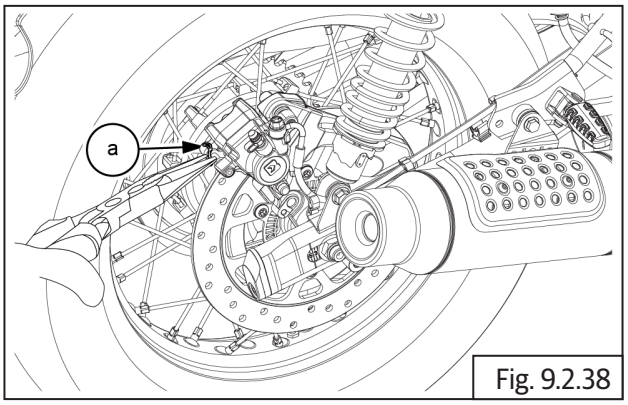

Fig. 9.2.38

	Screw Driver

- Install brake pad inner clip **(a)** into brake pad lock pin.

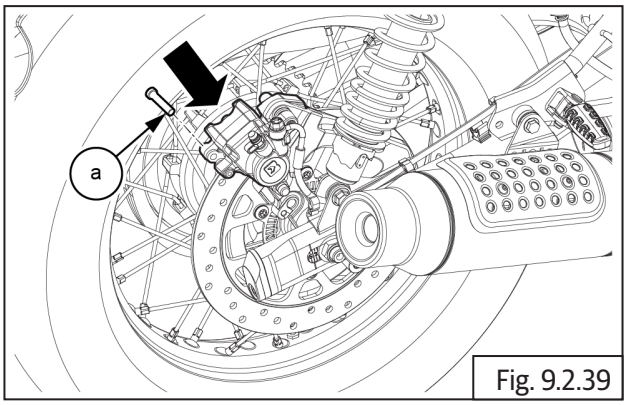

Fig. 9.2.39

	Nose plier

- Locate and align the ABS sensor **(a)** with shim **(b)** into rear caliper.

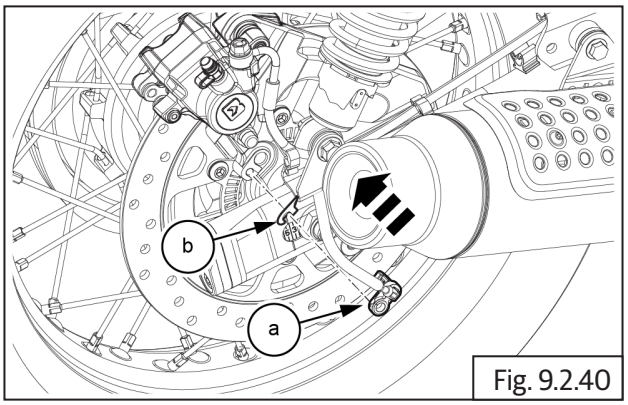

Fig. 9.2.40

- Locate and tighten Hex socket head screw **(M6) (a)** located below brake caliper on RH rear wheel.

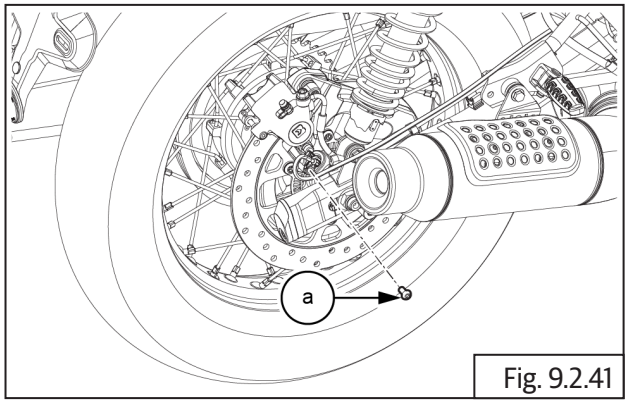

Fig. 9.2.41

	4 mm Allen socket with Ratchet
	4 - 6 Nm / 0.4 - 0.6 kgf-m

- Assemble swing arm bolt, spindle and chain adjuster assembly into rear wheel. (Refer-------).

9.3.3.Master Cylinder - Rear

- Locate new O-ring inside the master cylinder bore.

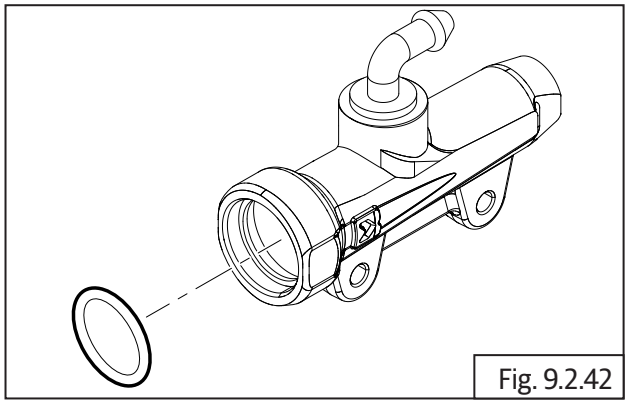
Fig. 9.2.42

⚠ CAUTION

DO NOT use any sharp tool to assemble the O ring or piston in the master cylinder.

⚠ CAUTION

Immediately wash away any brake fluid that spills.

- Assemble spring guide on the small end of spring.
- Locate peg on piston, on spring guide.
- Locate large bush over the piston.
- Insert large end of the spring along with the piston and guide bush into the master cylinder bore and hold it in compressed position inside master cylinder.
- Assemble Circlip **(a)** in the master cylinder body **(b)** and ensure it is locked properly in the groove.

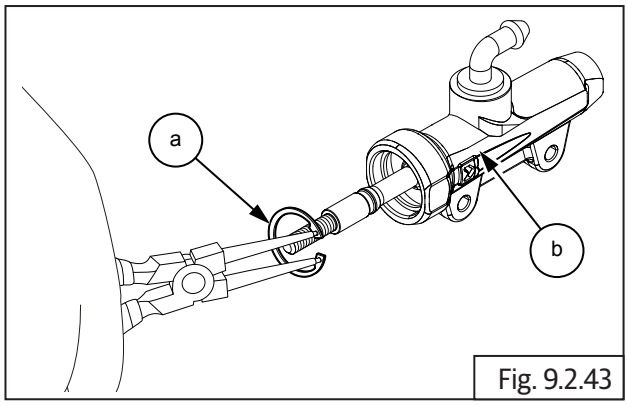

Fig. 9.2.43

	Inner Circlip plier

- Assemble the protective rubber boot **(a)** on the master cylinder.

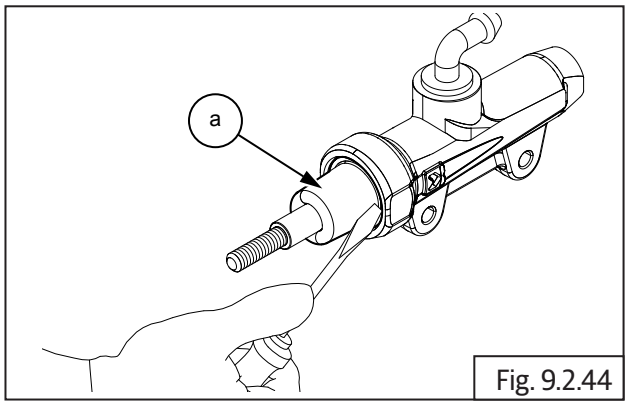

Fig. 9.2.44

	Screw driver

9.3.4. Rear Brake Pedal

- Apply grease on bush **(c)** and pivot pin **(b)**.
- Locate brake pedal **(a)** along with bush **(c)** and spring **(d)** into RH control plate.
- Tighten pivot pin **(b)** into control plate RHS.

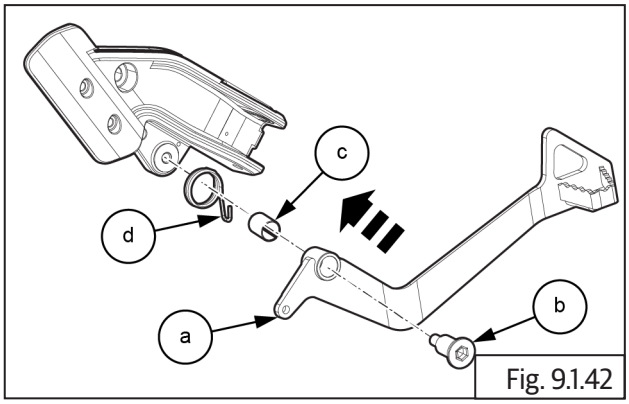

Fig. 9.1.42

	NLGI 2 / Mobil XHP 222

	8 mm Allen Socket with Ratchet
	21.75 - 28.75Nm / 2.21 - 2.93kgf-m

- Locate master cylinder **(a)** on RHS chassis frame..

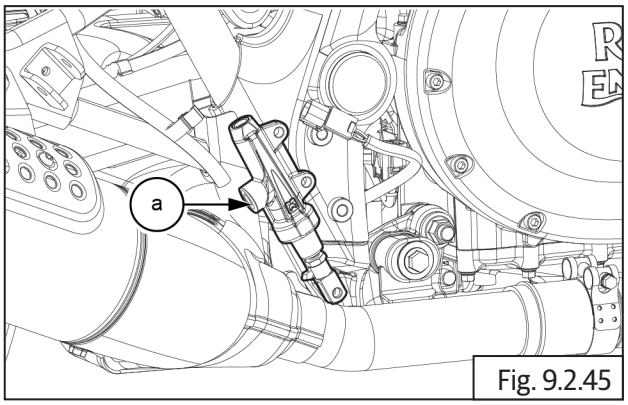

Fig. 9.2.45

- Install the control plate with brake pedal **(a)** onto the frame.

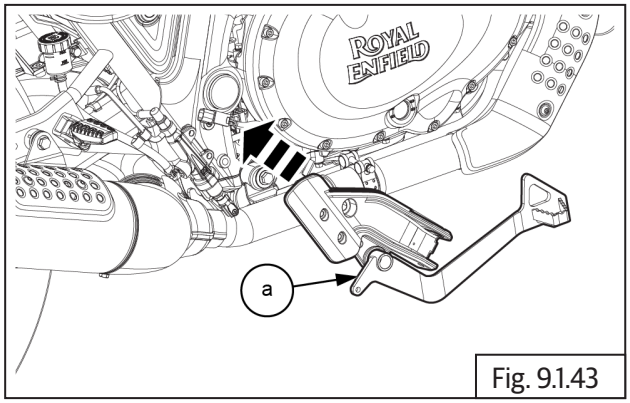

Fig. 9.1.43

- Locate and align the nut plate **(b)** on the RH control plate.
- Tighten and secure 2 Nos cap bolts **(M6) (a)** onto the master cylinder.

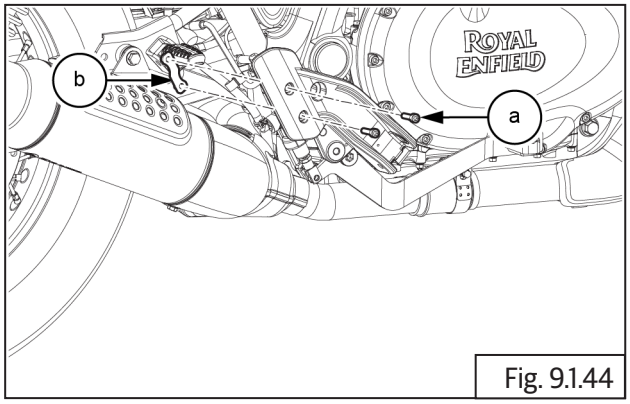

Fig. 9.1.44

	5 mm Allen Socket with Ratchet
Torque	9 - 12Nm / 0.9 - 1.2kgf-m

- Insert clevis spring pin **(a)** into the rear master cylinder.

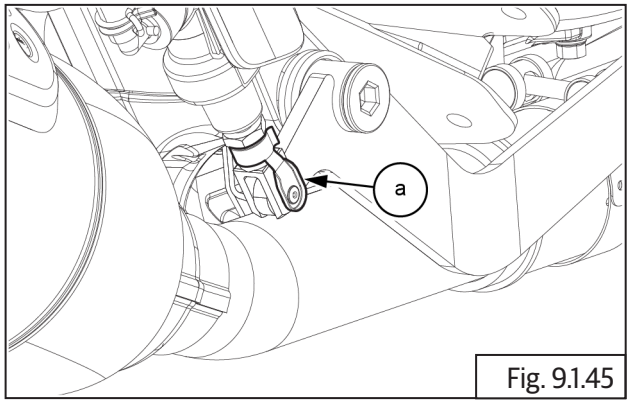

Fig. 9.1.45

	Nose plier

- Locate banjo bolt **(a)** and the hose **(b)** on the rear Master cylinder.

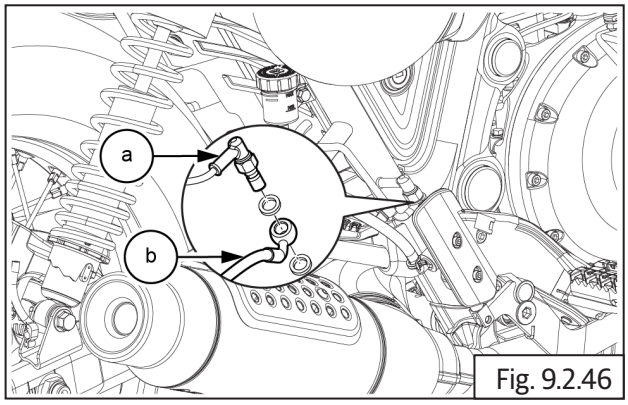

Fig. 9.2.46

	14 mm Double end spanner

- Connect brake lamp coupler **(a)** to main wiring harness **(b)** on motorcycle RH.

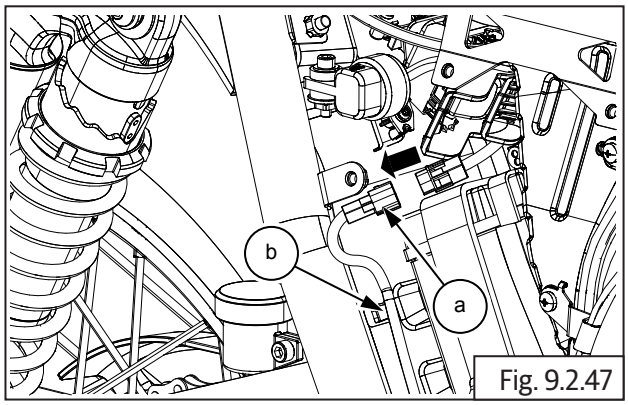

Fig. 9.2.47

9.3.5. Rear Fluid Reservoir

- Fix the hose **(a)** into reservoir.

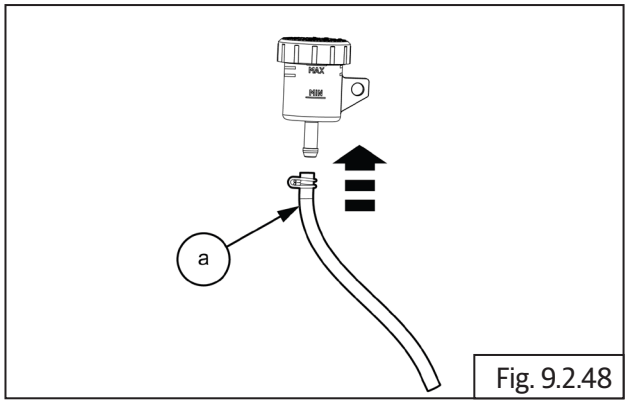

Fig. 9.2.48

- Fix the clip **(a)** on reservoir.

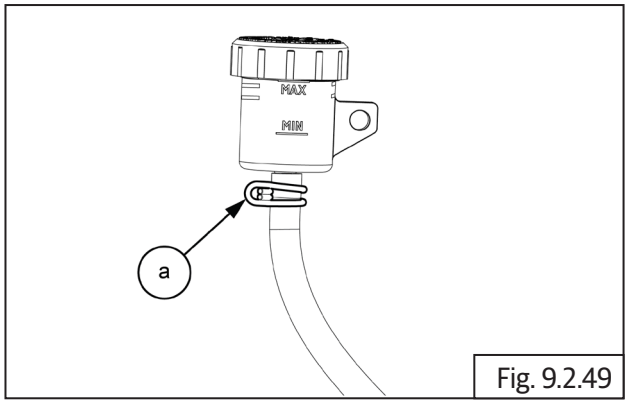

Fig. 9.2.49

	Nose Plier

- Insert and tighten Hex head flange bolt **(M6) (a)** to fix fluid reservoir.

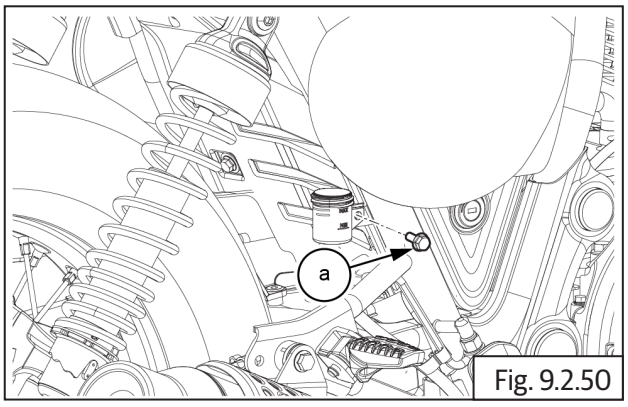

Fig. 9.2.50

	10 mm socket with Ratchet
	2 - 4 Nm / 0.2 - 0.4 kgf-m

- Locate the clip **(a)** to fix fluid reservoir.

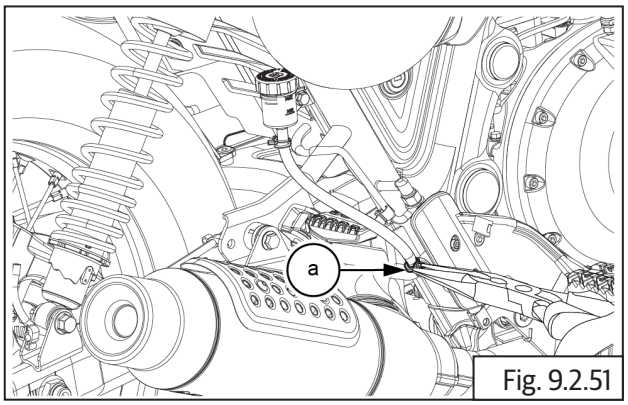

Fig. 9.2.51

	Nose Plier

- Fill the oil **(a)** into the fluid reservoir **(b)**.
- For filling fluid reservoir capacity,grade and frequency, refer the Technical Specification & PMS chapters

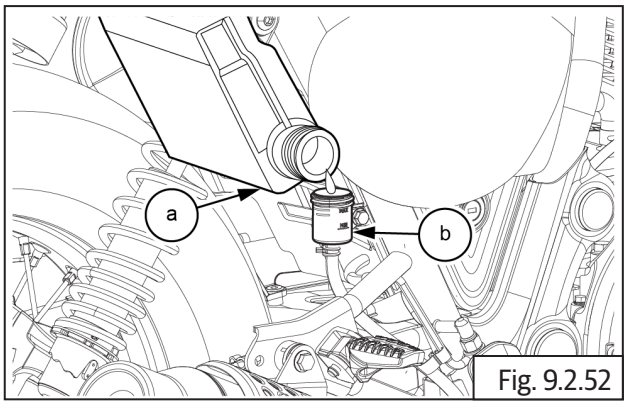

Fig. 9.2.52

- Locate the cap **(a)** on the fluid reservoir **(b)** .

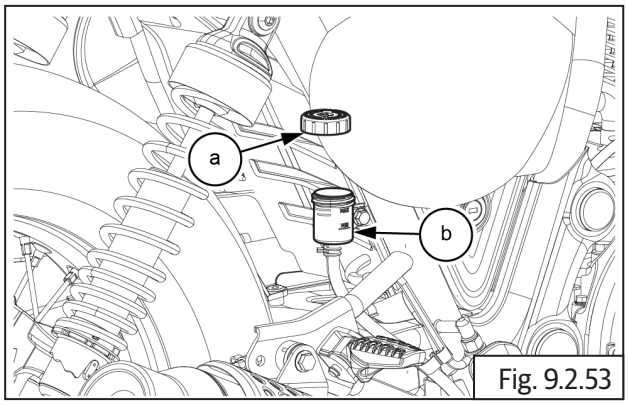

Fig. 9.2.53

NOTE
• *After installing brake pedal vertical play should be* **4.5mm.**

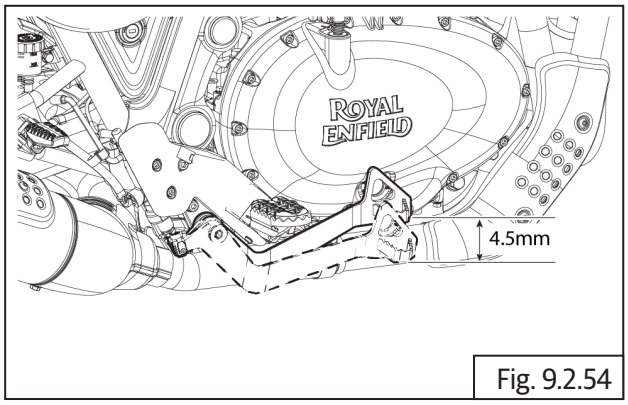

Fig. 9.2.54

NOTE
• *After installing brake pedal lateral play should be* **4 to 6 mm.**

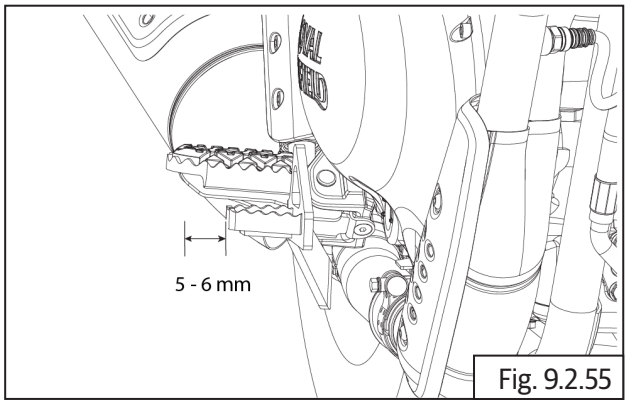

Fig. 9.2.55

9.4. Brake - Front

9.4.1. Brake Disc - Front

- Install the damper rubber **(a)** on front wheel hub.

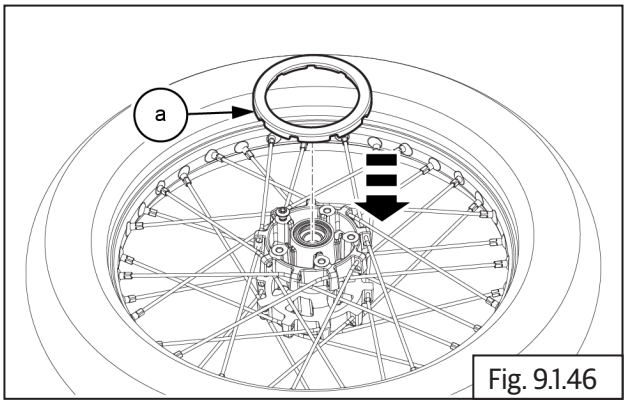

Fig. 9.1.46

- Locate front brake disc **(a)** on wheel hub with the disc facing up. Ensure mounting holes are correctly aligned.

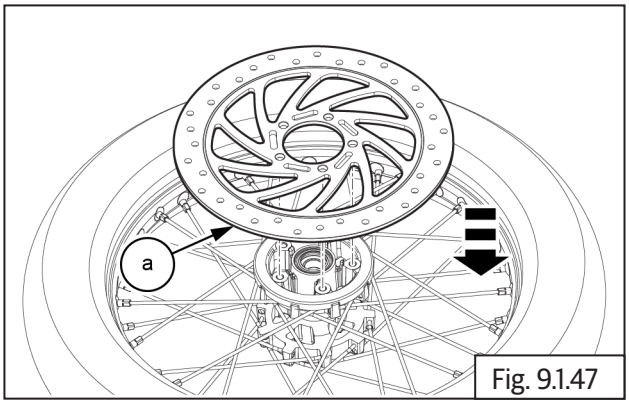

Fig. 9.1.47

- Position toner wheel **(a)** on front disc and ensure mounting holes are correctly aligned.

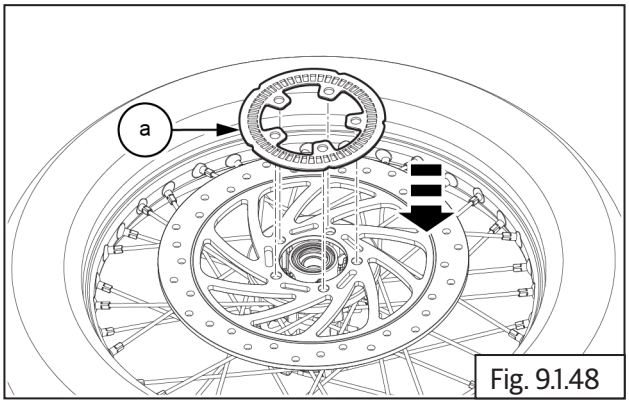

Fig. 9.1.48

- Locate and tighten the **5 Nos** Hex socket head bolts **(M8) (a)** on the mounting holes and tighten toner ring and brake disc to the wheel hub in crisscross patten to specified torque.

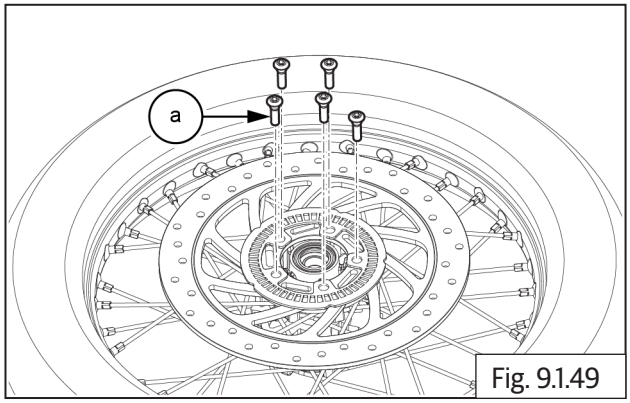

Fig. 9.1.49

	6 mm Allen socket with Ratchet
	32-36 Nm / 3.2 - 3.6 kgf-m

- Assemble front wheel into front fork assembly. (Refer-------).

9.4.2. Brake Caliper - Front

- Coat fresh brake fluid on new dust seals and piston seals.
- Install piston seals in inner groove **(a)** and dust seals in outer groove **(b)** in the bore in caliper assembly.

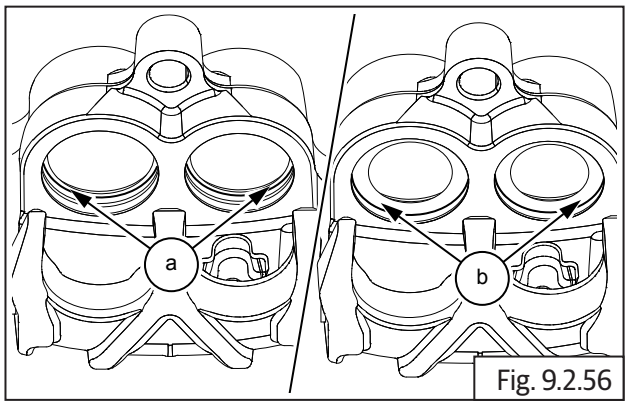

Fig. 9.2.56

- Coat the caliper cylinders and pistons with fresh brake fluid.
- Insert closed end of the pistons into caliper bores and gently press it into caliper fully till open ends of the piston **(a)** are flush with caliper bore outer edge.

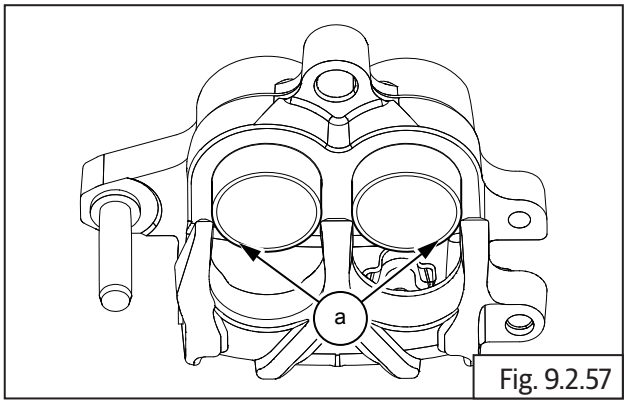

Fig. 9.2.57

NOTE
• *Do not apply force while assembling the pistons into the caliper. Press only with minimal hand pressure. Assemble pistons one at a time into the caliper.*

- Smear fresh brake fluid on the caliper boot and bellow and assemble them on the caliper body.

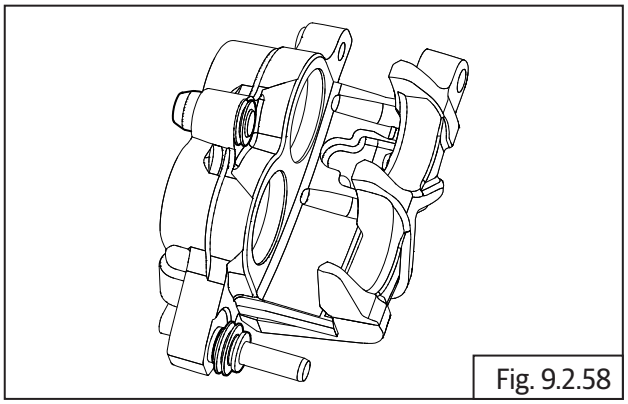
Fig. 9.2.58

- Install pad tension spring plate **(a)** in caliper body.

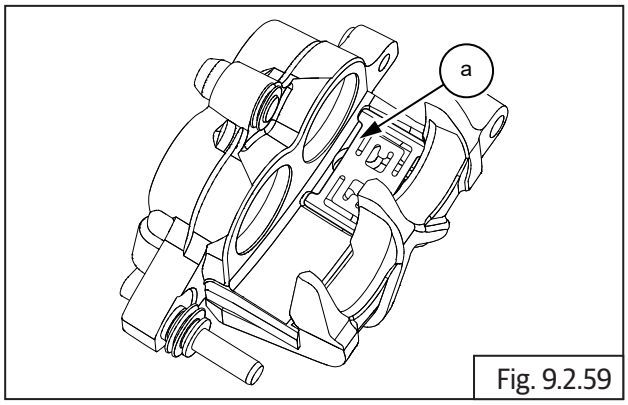

Fig. 9.2.59

- Assemble bleeder valve **(a)** with dust cap on the caliper body.

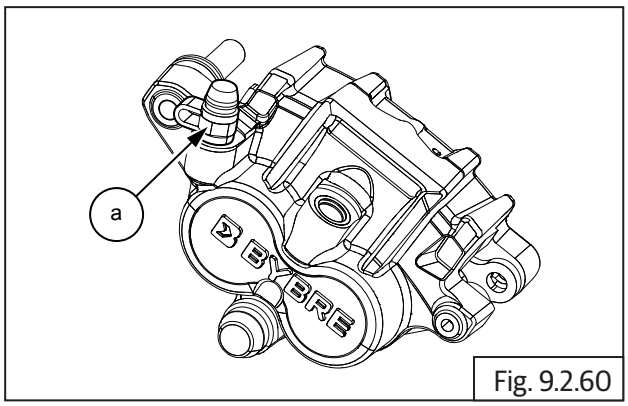

Fig. 9.2.60

- Assemble the mounting bracket **(a)** on caliper body **(b)**.

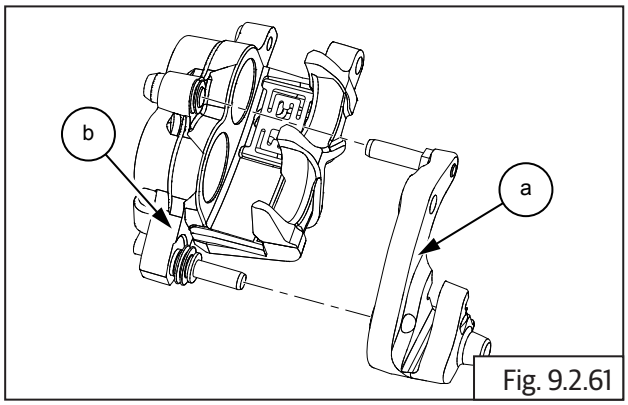

Fig. 9.2.61

- Slide in and assemble brake pads **(a)** into brake caliper **(b)**.

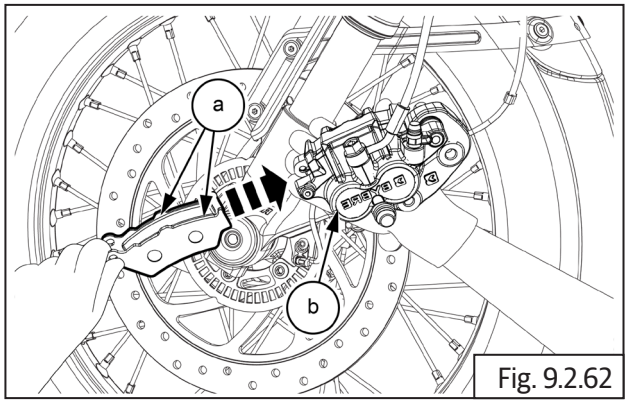

Fig. 9.2.62

- Lubricate and insert brake pad pin **(a)** into caliper.

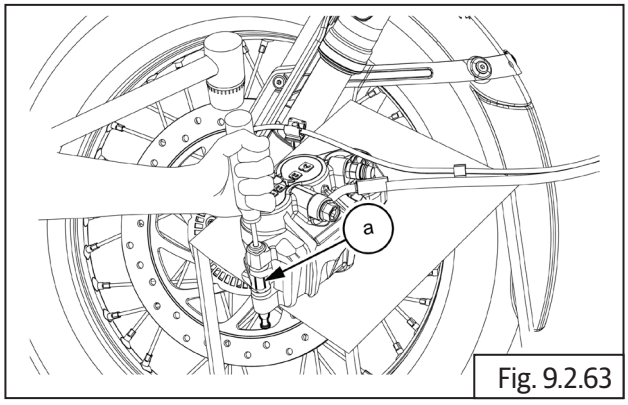

Fig. 9.2.63

- Suitably support caliper and correctly tap brake pad pin **(a)** from outside to inside.

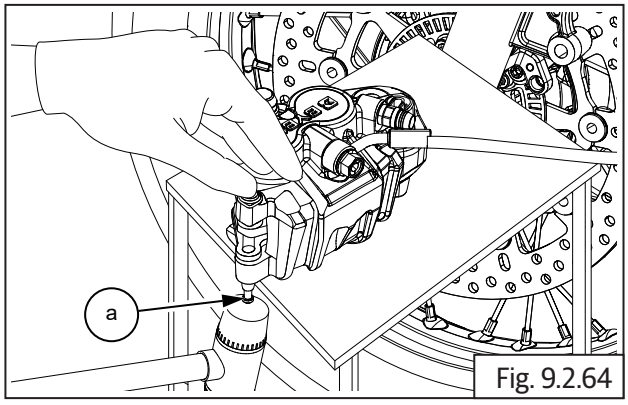

Fig. 9.2.64

	Pin punch and Mallet

- Assemble brake pad lock clip **(a)** into the brake pad pin **(b)**.

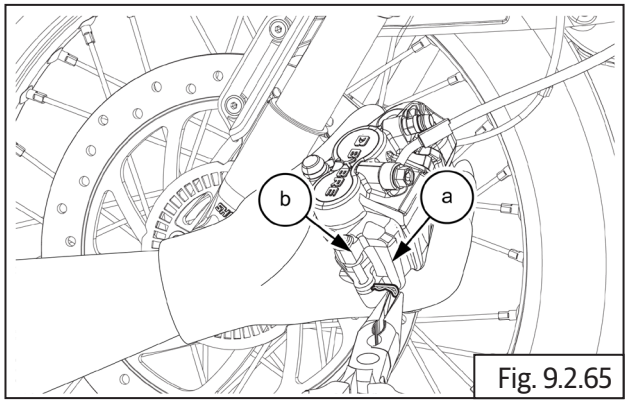

Fig. 9.2.65

	Nose plier

- Support and hold the front brake caliper assembly suitably onto the front LH fork.
- Locate and tighten upper and lower Hex flange head bolts **(M10) (a)** to fix front brake caliper assembly to LH fork.

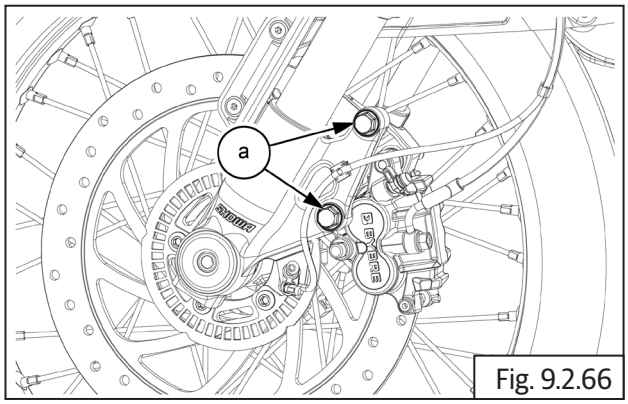

Fig. 9.2.66

	14 mm Socket with Ratchet
	43 - 47 Nm / 4.3 - 4.7 kgf-m

- Gently install hose into caliper assembly. (Refer-------)

9.4.3. Master cylinder - Front

- Locate the conical spring **(a)** on the piston **(b)**.

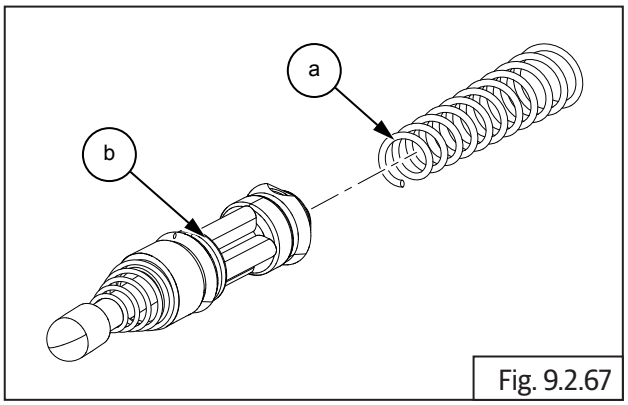

Fig. 9.2.67

- Compress and assemble circlip **(a)** into groove of master cylinder.

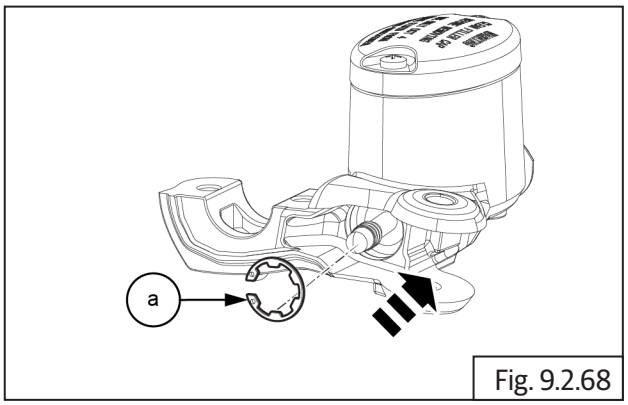

Fig. 9.2.68

	Inner Circlip plier

- Install the boot **(a)** on master cylinder assembly .

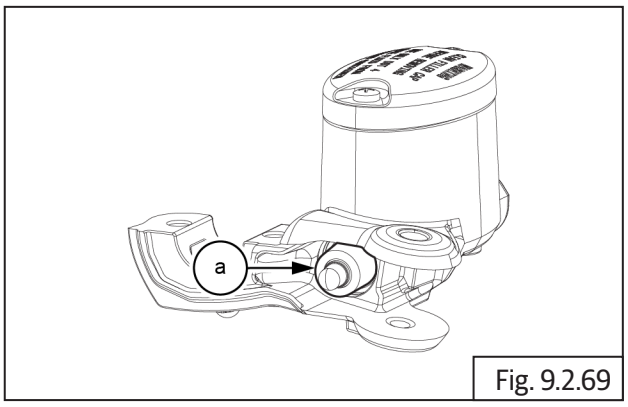

Fig. 9.2.69

⚠ CAUTION

DO NOT use tools with sharp ends. Ensure circlip is locked properly after assemble.

- Position brake lever inside the bracket, locate pivot screw **(a)** from the top and tighten to bracket.
- Assemble lock nut **(b)** below and tighten.

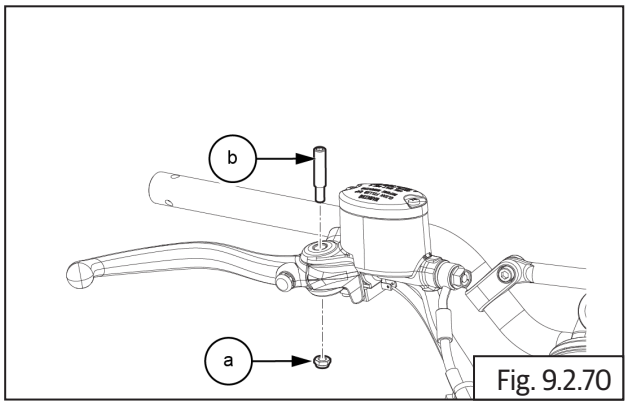

Fig. 9.2.70

	4 mm allen socket and 10 mm Socket with Ratchet
	3 - 5 Nm/0.3 to 0.5 kgf-m

- Locate master cylinder assembly on handlebar RH and locate clamp over cylinder.
- Insert and tighten 2 Nos Hex flange head bolt **(M5) (a)** on master cylinder.

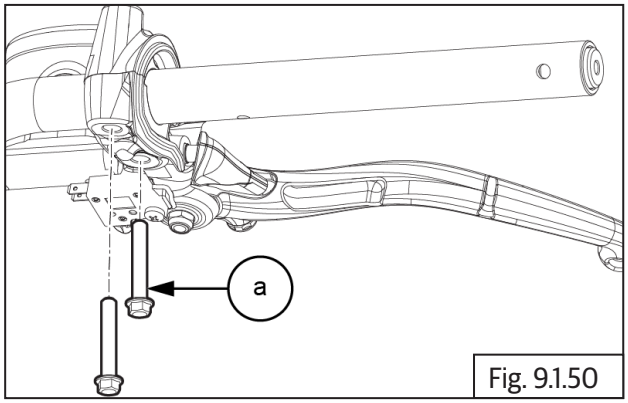

Fig. 9.1.50

	8 mm Socket with Ratchet
	5 Nm / 0.5 kgf-m

- Tighten the brake switch **(a)** with copper washer and ABS hose **(b)** on front master cylinder.

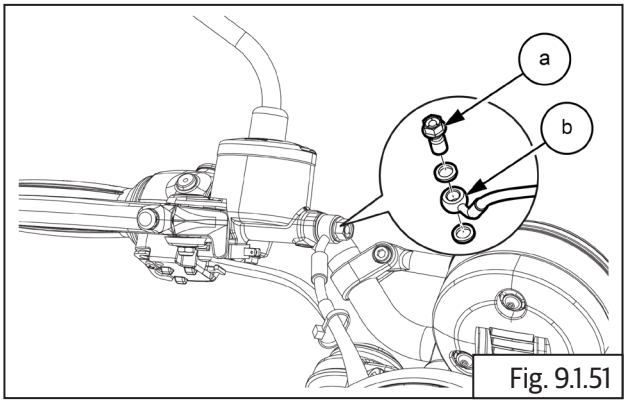

Fig. 9.1.51

	12 mm Socket with Ratchet
	24 - 28 Nm / 2.4 to 2.8 kgf-m

- Connect the front brake switch connector **(a)** to front master cylinder **(b)**.

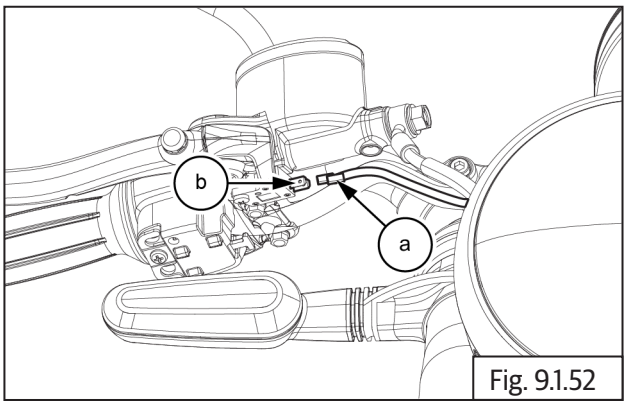

Fig. 9.1.52

- Refill fluid, inspect and diagnose if there are any leakages.
- For filling details, refer the Technical Specifications & PMS chapters.
- After install refer brake oil bleeding procedure. (Refer-------).

⚠ CAUTION

Immediately wash away any brake fluid that spills.

9.5 Anti-lock Braking System (ABS)

9.5.1 Working Principle

The Royal Enfield Interceptor Bear 650 twin motorcycles are equipped with the state of the art Anti-Lock Braking System (ABS).

The ABS is a safety system which constantly receives inputs about the speed of rotation of the front and rear wheels on a real time basis and modulates the braking force for each wheel when brakes are applied by the rider. This helps prevent the brakes from locking the wheels, especially when brakes are applied suddenly, the wheels have a better traction with the road surface.

The benefits of ABS:

- Increased braking efficiency and riding confidence when braking.
- Prevent wheel lock up when brakes are applied suddenly with great force thereby ensuring good traction of the front and rear wheels with the road surface.

Typical Motorcycle Braking Distance

The ABS consists of an Electronic Control Unit (ECU), modulator, toner rings and wheel speed sensors.

The ECU constantly receives inputs on the speed of rotation of the front and rear wheels through the wheel speed sensors. When the rider applies either the front or rear brakes or both brakes, the speed sensors provide data on the rate of deceleration of the wheels to the ECU which then commands the valves in the modulator to progressively regulate the hydraulic fluid pressure on a real time basis so that the brake pads do not “lock” on the brake disc which can potentially cause the wheels to lock.

Whenever front and/or rear brakes are applied with great force/suddenly, the braking management system gets input of the wheels speed through a wheel speed sensor and commands the modulator in the braking system to modulate the hydraulic fluid force such that the brake pads do not lock on the brake disc which effectively from locking and provide better traction to prevent the motor cycle from shifting and/or loss of control.

In the ABS, during application of brakes, a pulsating sensation will be felt on the brake lever/pedal indicating that the ABS is working correctly.

⚠ WARNING

The ABS will by no means prevent an accident and/or loss of control. It is the responsibility of the rider to anticipate and judge the braking distances required, depending on the speed at which the motorcycle is traveling and apply brakes sufficiently in advance to prevent an accident and/or loss of control.

While ABS assists in improved motorcycle control during braking, decreased stopping distances on dry and good road conditions, it cannot be assumed that it will be effective in wet, rainy, snow covered, off road conditions, loose gravel surfaces or hilly roads etc, as the traction of the wheel itself will be very minimal in these conditions.

As far as possible, whenever applying sudden brakes in emergency in wet conditions, please ensure the motorcycle is upright in steady riding position and the handlebars are straight. Avoid hard braking when banking heavily at great speeds.

Whenever brakes are applied, a pulsating sensation will be felt on the brake lever/pedal. This is characteristic to the ABS and quite normal, as the modulator in the ABS constantly modulates the hydraulic pressure in the braking system in relation to the force applied on the brake lever/pedal and the speed of the motorcycle.

Whenever bleeding the hydraulic system, it is highly recommended to bleed both the front and rear brakes for proper functioning of the ABS. Do not restrict to bleeding any one brake system as it may render the ABS non-functional, in case the other brake has air bubbles in its system.

9.5.2. Functions and Specifications of the ABS Aggregates

As soon as the ignition and engine stop switch are switched ON, the ABS sign will light up. The lamp will remain ON till the motorcycle attains a speed of 5 Kmph (MPH) and then switches OFF. This indicates that the ABS is working properly.

In the event the lamp does not switch OFF and remains continuously ON at higher speeds, it is recommended not to drive the motorcycle and get the brake system inspected and corrected through a nearest authorized Royal Enfield Dealer / Distributor.

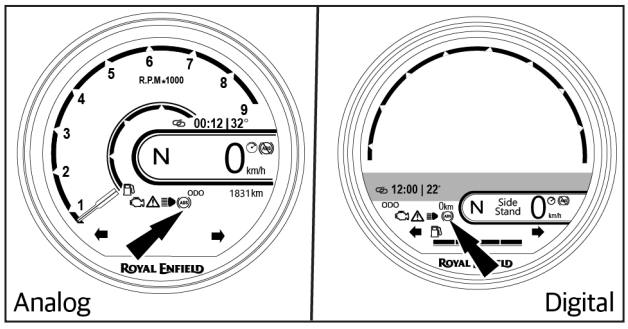

The ride mode can be viewed and changed by pressing the mode button on the RH switch cube.

The ride mode appears on the home screen and following modes are available.

- Performance + ABS ON
- Performance + Rear ABS OFF
- ECO + ABS ON
- ECO + Rear ABS OFF

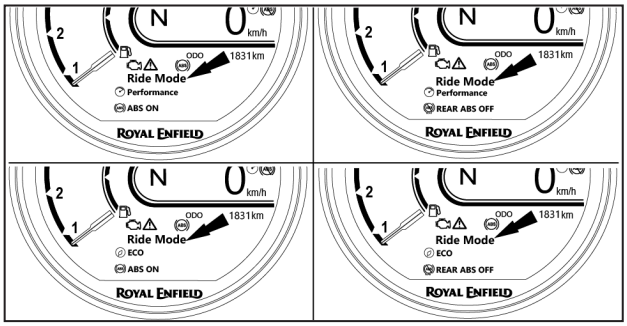

Electronic Control Unit (ECU) with Modulator

The ECU is located in the bracket alongside of the modulator, on the frame, behind the battery. It consists of a microprocessor, which receives inputs from the wheel speed sensors, interprets the data, determines the safe hydraulic pressure in relation to the speed of the wheels and commands the valves in the modulator to progressively regulate the hydraulic fluid pressure on a real time basis for efficient and safe braking.

Specifications:	Vitesco (Continental) M4C
Operating Voltage:	9 V to 16 V
Operating Temperature:	-40ºC to 70ºC

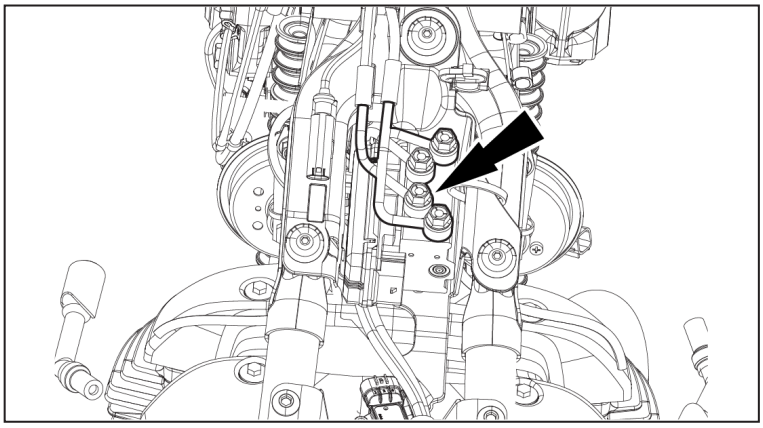

The ECU also records and stores data on the performance of the ABS on a real-time basis. This will help in diagnosing any braking related disorders, whenever the Royal Enfield NACS II diagnostic tool is connected to the socket in the wiring harness of the motorcycle.

The history stored in the ECU can also be saved to an external computer for future reference and also erased from the ECU, using the Royal Enfield NACS II diagnostic tool.

The modulator is located on the frame below the fuel tank. The brake hoses from the master cylinders and brake calipers are connected to the modulator.

Whenever brakes are applied, the valves inside the modulator are progressively activated by the ECU to regulate the hydraulic fluid pressure in the brake system. This in turn will modulate the movement of the pistons inside the brake calipers to prevent the brake pads from locking on the brake discs.

Wheel Speed Sensors, Front and Rear

There are 2 wheel speed sensors provided in the motorcycle. The front speed sensor is assembled on the fork end LH and the rear speed sensor is assembled on the rear wheel caliper bracket.

Specifications:

Operating Voltage:	0.08 V to 16 V
Operating Temperature:	-40º C to 70º C

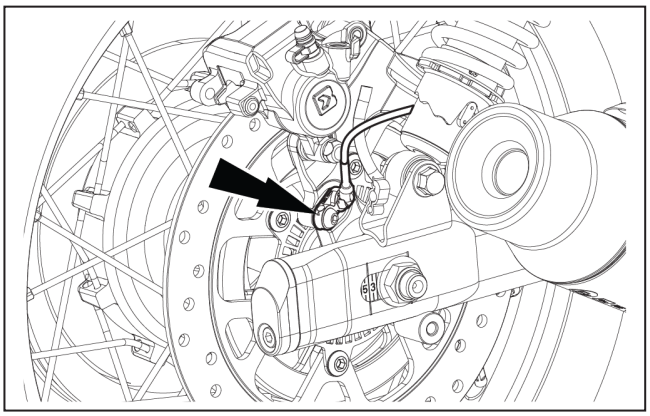

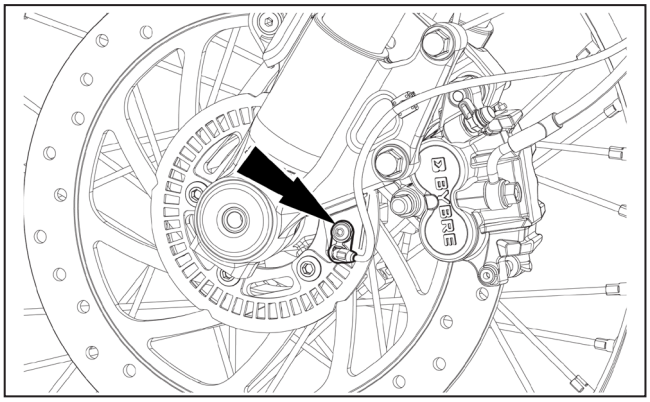

These sensors provide the inputs to the ECU about the speed of rotation of the wheels.

Toner Rings, Front and Rear

The toner rings are assembled on the front and rear brake hubs inside the brake discs.

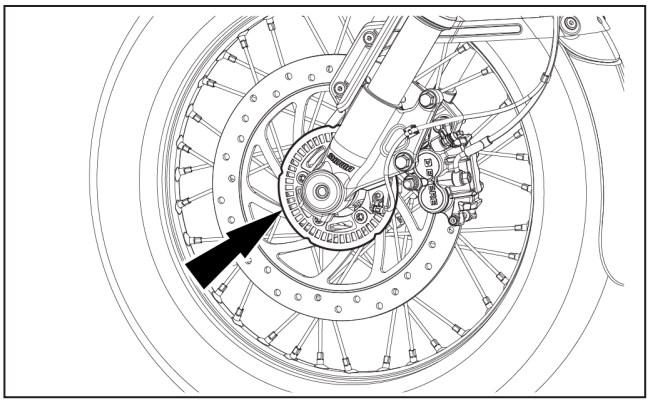

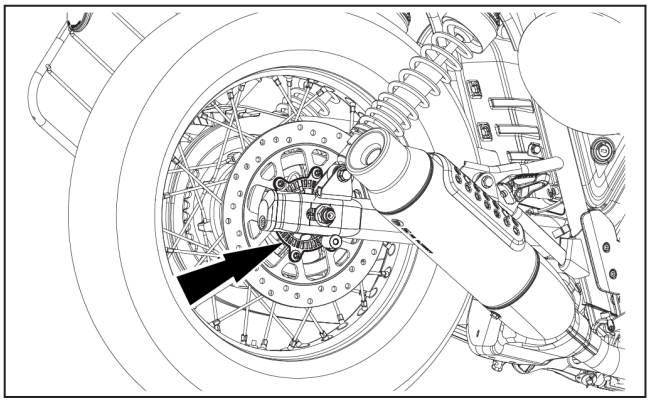

The toner rings assists the wheel speed sensors to assess the speed of rotation of the wheels.

Master Cylinders, Front and Rear

The front brake master cylinder is assembled on the handlebar RH and activated by the front brake lever.

The rear brake master cylinder is assembled on the frame RH side and activated by the brake pedal

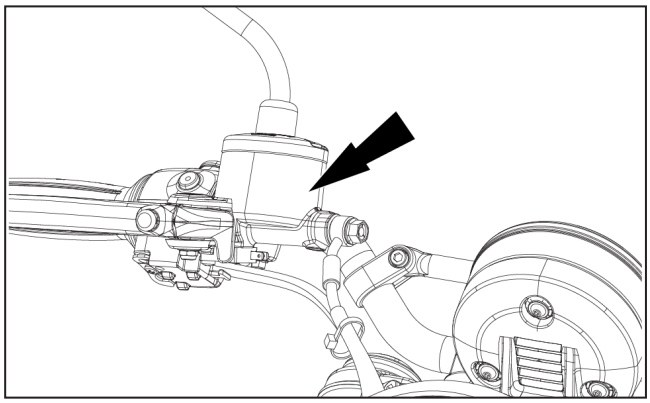

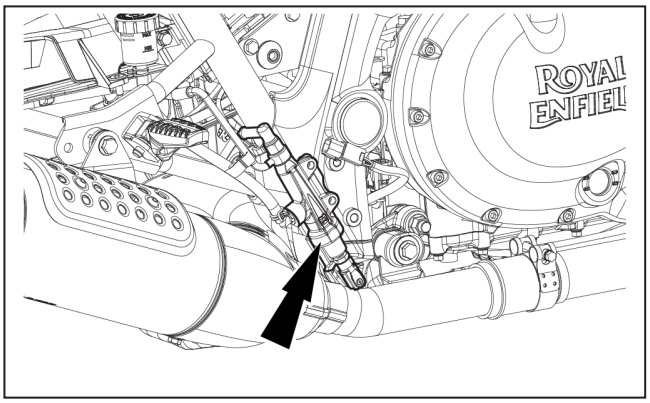

Whenever the front brake lever/rear brake pedal are activated, the piston inside the master cylinder applies force on the brake fluid to activate the brakes.

The master cylinders are connected to the modulator through brake hoses to transmit the applied hydraulic fluid pressure from the master cylinders.

Wheel Calipers - Front and Rear

The front wheel caliper is assembled on the fork end LH and the rear wheel caliper is located on the rear swing arm RH. The wheel calipers consist of pistons and brake pads.

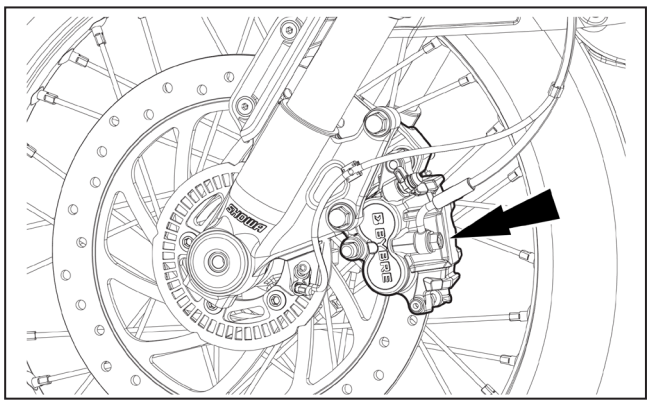

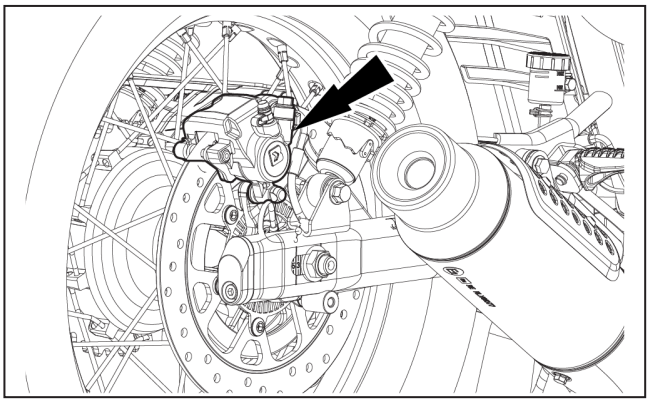

When brakes are applied, the hydraulic fluid force in the braking system causes the pistons to move, and pushes the brake pads against the brake discs on the wheels for braking.

The wheel calipers are connected to the modulator which modulate the hydraulic fluid force to be applied against the pistons.

Do's and Don'ts for ABS

- **Use only approved Brake fluid recommended by Royal Enfield. (DOT4)**
- **Whenever the modulator is removed from the motorcycle, please ensure it is stored upright with the ports facing upwards.**
- **Whenever the modulator is removed from the motorcycle for any reason, please ensure the front and rear brake system bleeding is carefully done and no air is trapped in the brake system.**
- **DO NOT interchange ABS unit/ECU from one motorcycle to another.**
- **DO NOT interchange the brake hose connections between master cylinders and wheel cylinders and also front and rear circuit, at the modulator end.**
- **The shelf life of a wet modulator unit is 5 years from the date of manufacture.**

Dismantling

9.5.3. Modulator

⚠ CAUTION

Before dismantling the modulator, ensure ignition switch and engine stop switch are in OFF position.

Ensure the hydraulic brake fluid from the front and rear brakes are drained completely.

- **Remove the following parts:**
  - Side panel RH. (Refer-------)
  - Rider seat. (Refer-------)
  - Fuel tank assembly. (Refer-------)

⚠ CAUTION

Ensure the following:

Fuel is drained completely from fuel tank.

Fuel feed and return hoses are disconnected from the fuel rail.

Wiring couplers to fuel pump and low fuel sensors are disconnected.

EVAP hose pipes are disconnected.

⚠ WARNING

Gasoline is extremely flammable and highly explosive. Improper handling can lead to fatal accident or serious injury.

- Bleed out the brake fluid from the front brake system.

⚠ CAUTION

Do not spill brake fluid on any part of the motorcycle as it will damage the painted/ plastic surfaces.

⚠ WARNING

Ensure brake fluid does not get in contact with eyes and skin. In-case of exposure wash affected area thoroughly with water. Seek medical attention immediately if any irritation persists.

Keep out of reach of children.

Dispose drained brake fluid carefully and responsibly.

- Loosen and remove banjo bolt **(a)** and disconnect hose **(b)** from front caliper on front fork LH.

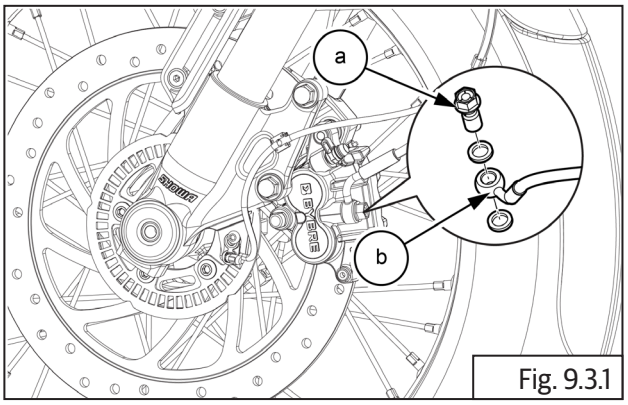

Fig. 9.3.1

	12 mm Ring spanner

- Loosen and remove banjo bolt **(a)** and disconnect hose **(b)** from front master cylinder on handlebar RH.

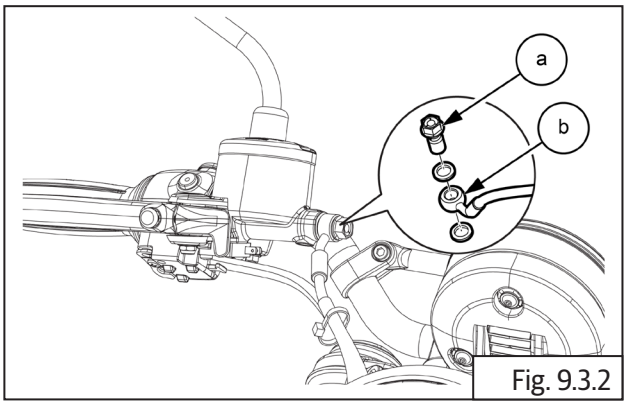

Fig. 9.3.2

	12 mm Ring spanner

- Loosen and remove banjo bolt **(a)** and disconnect hose **(b)** washer **(c)** and from rear caliper from rear wheel RH.

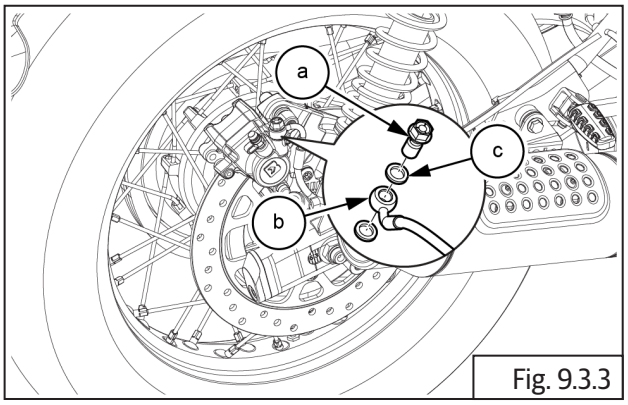

Fig. 9.3.3

	12 mm Ring spanner

- Loosen and remove banjo bolt **(a)** and disconnect hose **(b)** from rear master cylinder assembly.

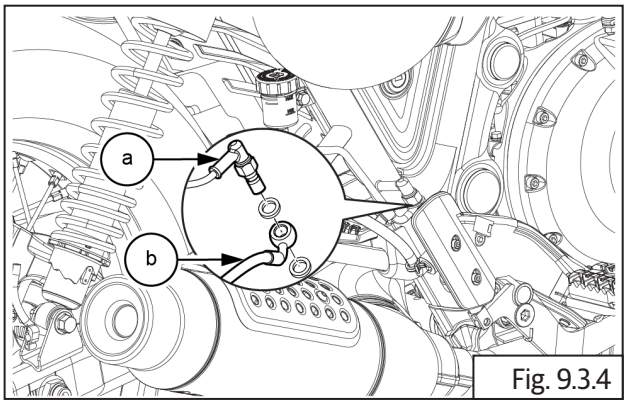

Fig. 9.3.4

	14 mm Ring spanner

- Remove brake hose mounting clamps front **(a)** from frame.

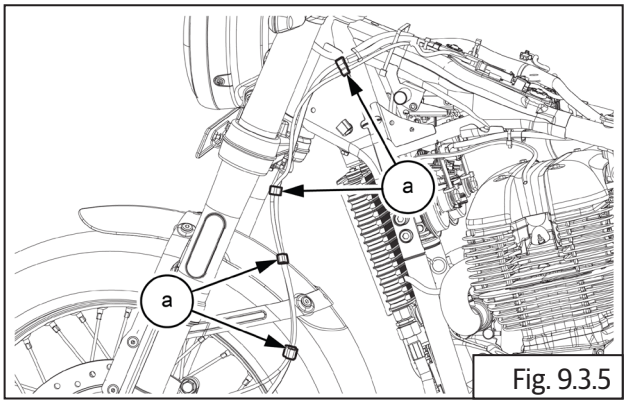

Fig. 9.3.5

- Loosen and remove 2 Nos pan head screws **(M5) (a)** from air filter box assembly RHS.

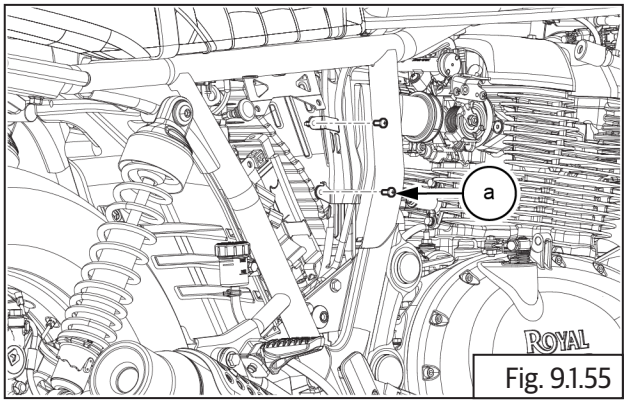

Fig. 9.1.55

	Screw driver (+)

- Remove the top **(a)** and bottom **(b)** clamps from hose.

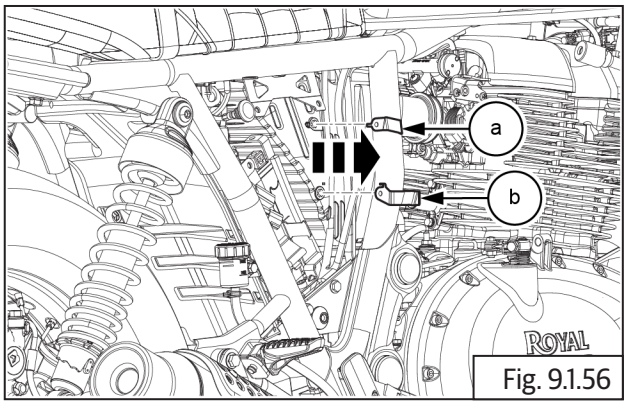

Fig. 9.1.56

- Disconnect holding straps **(a)** of the brake hoses to the frame/fork end/swing arm.

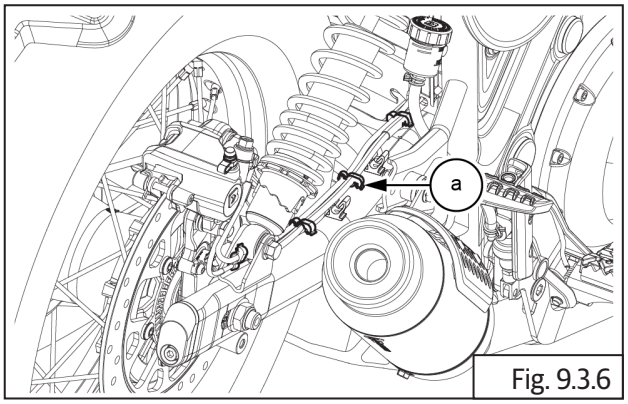

Fig. 9.3.6

- Disconnect ABS modulator electrical connector **(a)** from ECU.

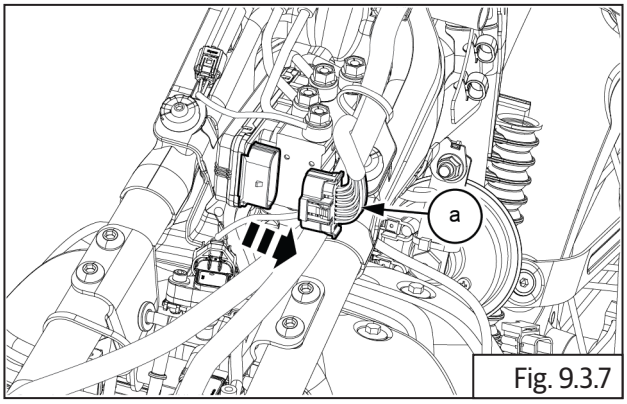

Fig. 9.3.7

- Remove strap holding main harness **(a)** to ABS housing bracket and move harness away from the bracket.

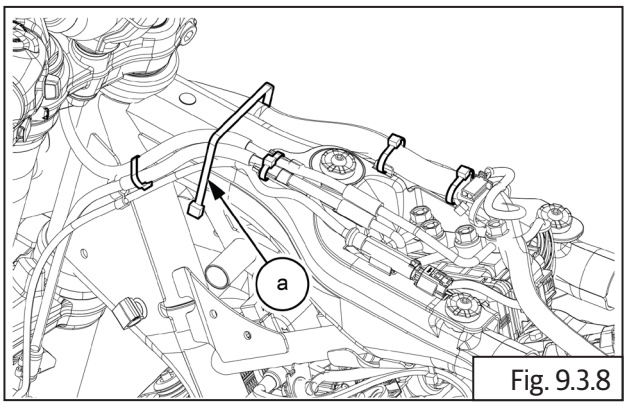

Fig. 9.3.8

- Disconnect front wheel speed sensor wiring connector **(a)** from harness.

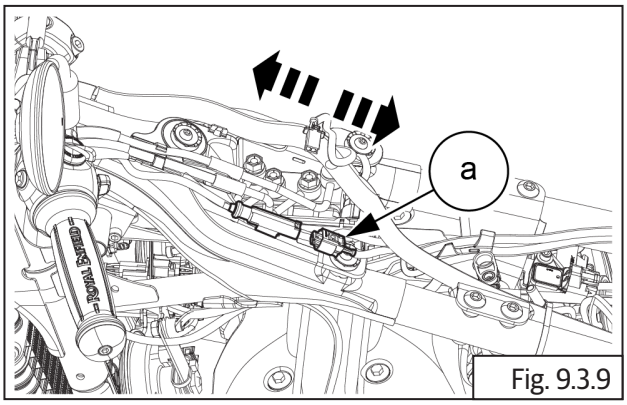

Fig. 9.3.9

- Disconnect MAP sensor connection and loosen and remove MAP sensor mounting bolt from modulator bracket.

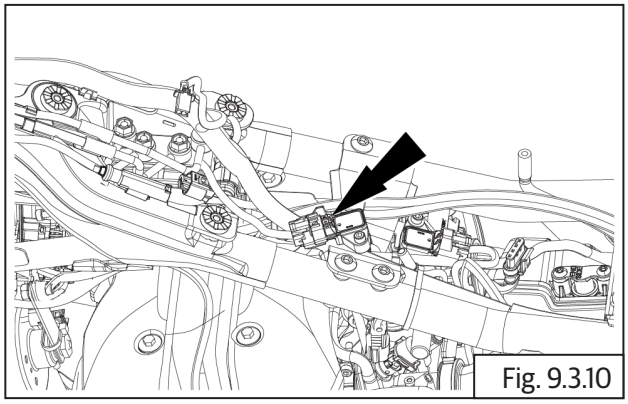
Fig. 9.3.10

- Loosen and remove hex flange bolt **(M6) (a)** from brake line bracket.

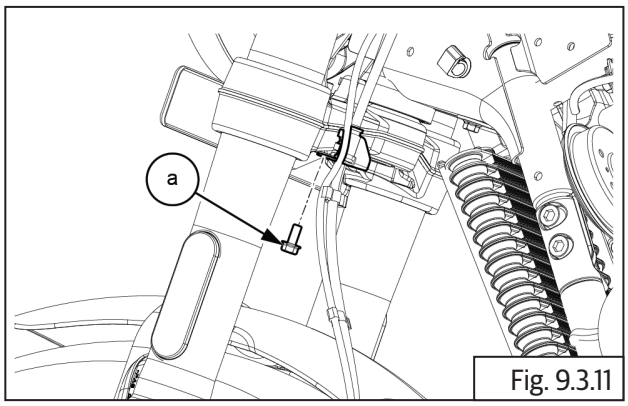

Fig. 9.3.11

	10 mm Socket with Ratchet

- Loosen and remove 3 Nos. mushroom head screws **(M6) (b)** and washer **(a)** holding ABS modulator mounting bracket from frame.

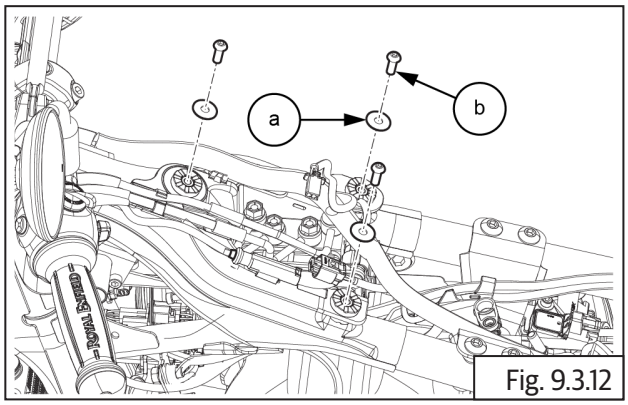

Fig. 9.3.12

	4 mm Allen socket with Ratchet

- Gently pull out modulator **(a)** along with bracket and 4 Nos. hoses from frame and remove.

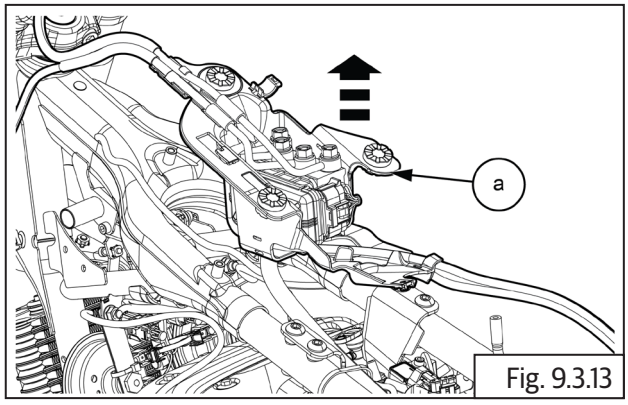

Fig. 9.3.13

- Loosen and remove hex bolt **(M6) (a)** at the rear side of the bracket.

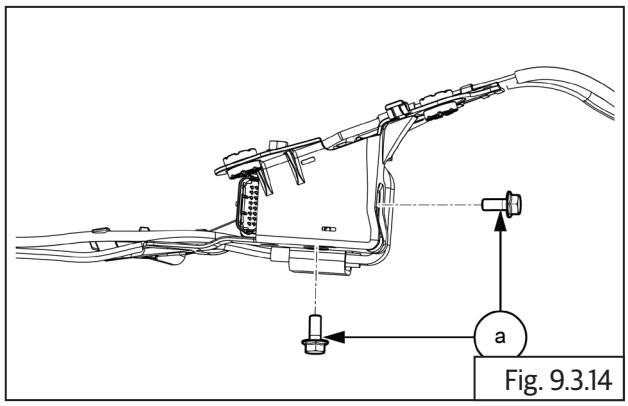

Fig. 9.3.14

	10 mm Socket with Ratchet

- Separate the ABS modulator **(a)** from bracket **(b)** and remove along with the 4 Nos. brake hoses.

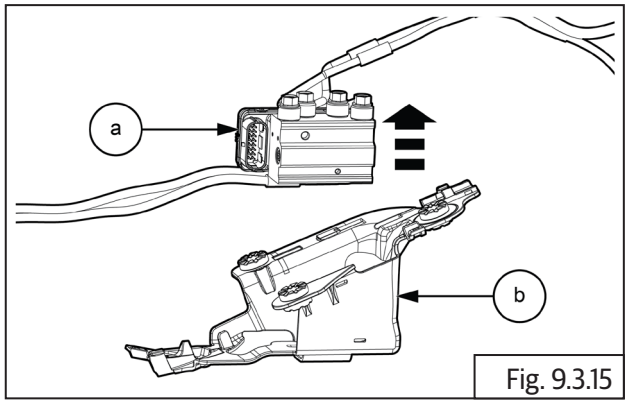

Fig. 9.3.15

- Remove the 3Nos grommets **(a)** from bracket.

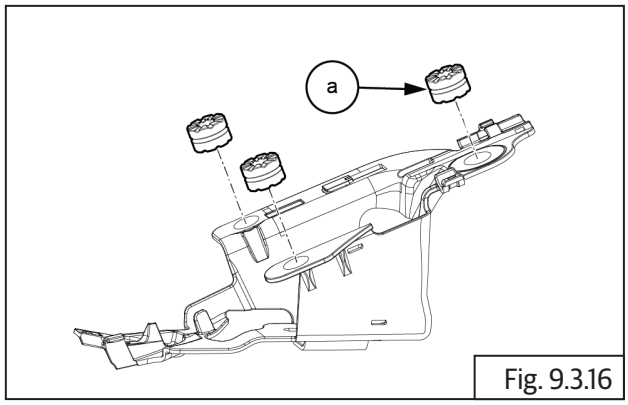

Fig. 9.3.16

- Brake hose color tags:
  - a) BLUE - Front Master Cylinder Assembly
  - b) GREEN - Front Brake Caliper
  - c) RED - Rear Brake Caliper
  - d) YELLOW - Rear Master Cylinder Assembly

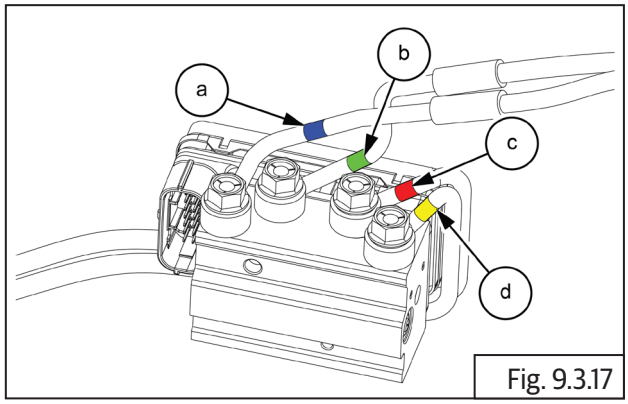

Fig. 9.3.17

- Reference mark to be created during dismantling for ease of assembly.

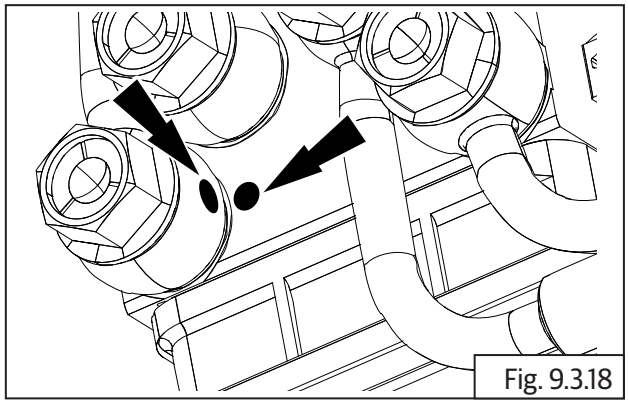
Fig. 9.3.18

- Repeat the above process to other brake hoses.
- Support modulator suitably on a work table, loosen and remove 4 Nos. banjo bolts **(a)** along with washers from modulator to remove brake hoses **(b)**.
- Remove 4 Nos. brake hoses from modulator.

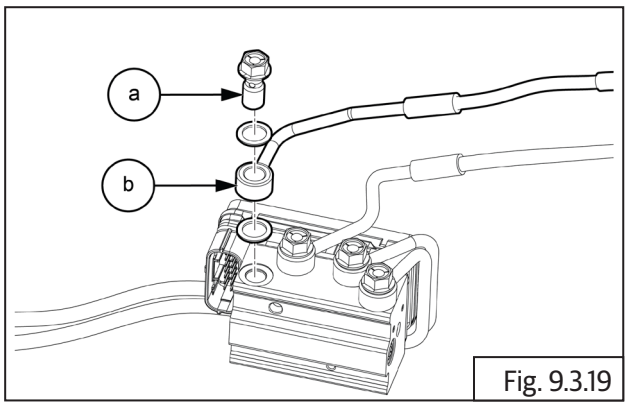

Fig. 9.3.19

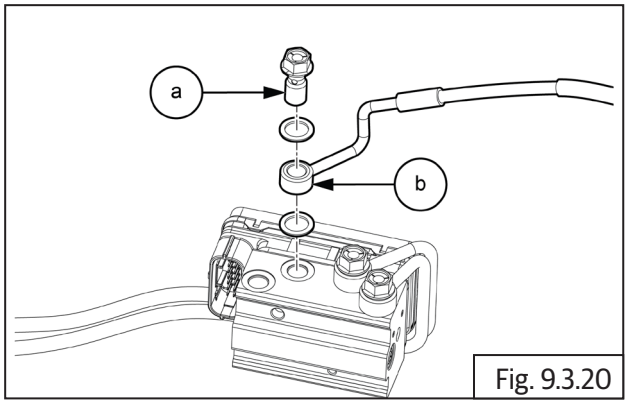

Fig. 9.3.20

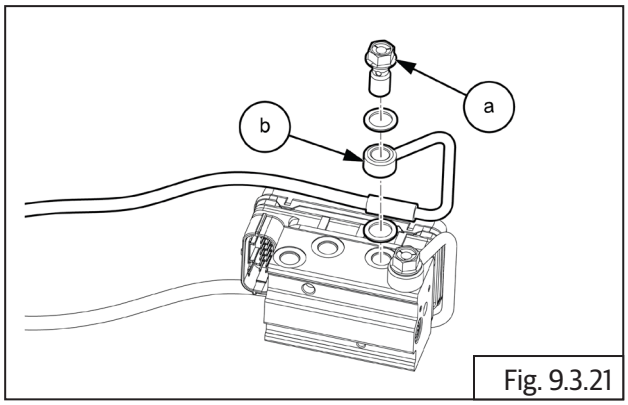

Fig. 9.3.21

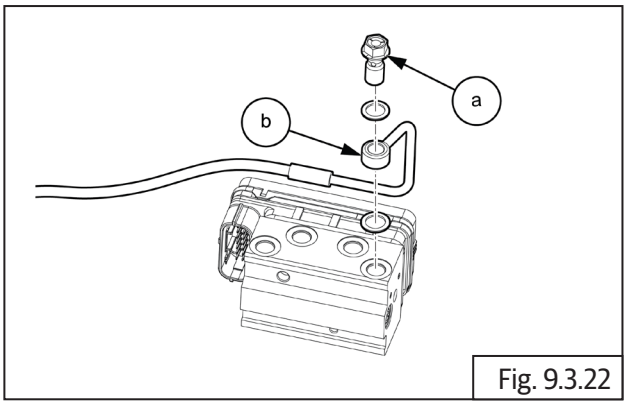

Fig. 9.3.22

Do's & Don'ts

- **DO NOT interchange ABS unit/ECU from one motorcycle to another.**
- **Whenever the modulator is removed from the motorcycle, please ensure it is stored upright with the ports facing upwards.**

9.5.4. Wheel Speed Sensor - Front

- Ensure Ignition switch and Engine stop switch are in OFF position.
- Release sensor coupler wire from the 4 Nos brake hose clips **(a)** on fork end LH and from the bracket on the frame.

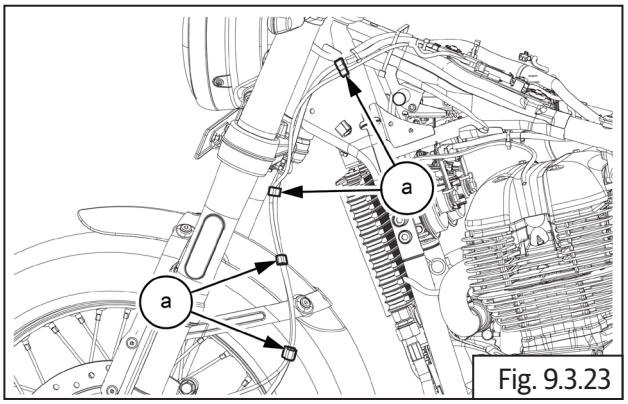

Fig. 9.3.23

- Disconnect sensor coupler **(a)** from harness near ABS modulator bracket.

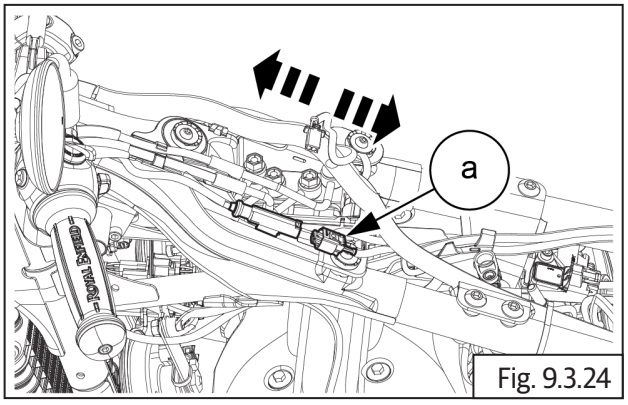

Fig. 9.3.24

- Remove sensor coupler wire from clip **(a)** on fork end LH.

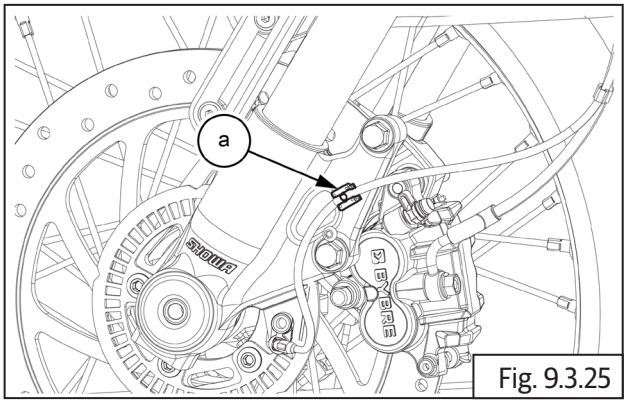

Fig. 9.3.25

- Loosen and remove hex socket head bolt **(M6) (a)** holding sensor **(b)** to fork end LH.
- Gently pull out sensor from fork end LH.

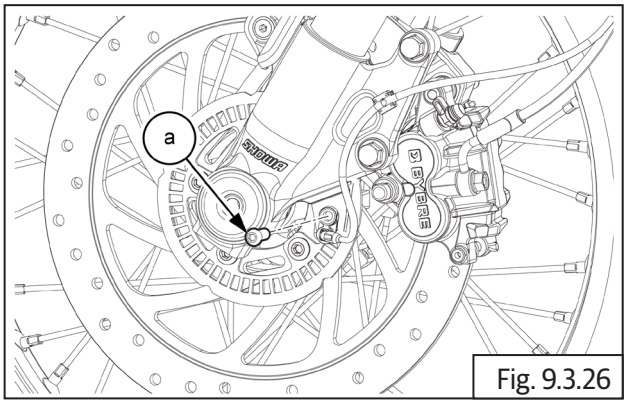

Fig. 9.3.26

	4 mm Allen socket with Ratchet

- Gently remove front wheel speed sensor **(a)** with shim **(b)** from rear wheel hub.

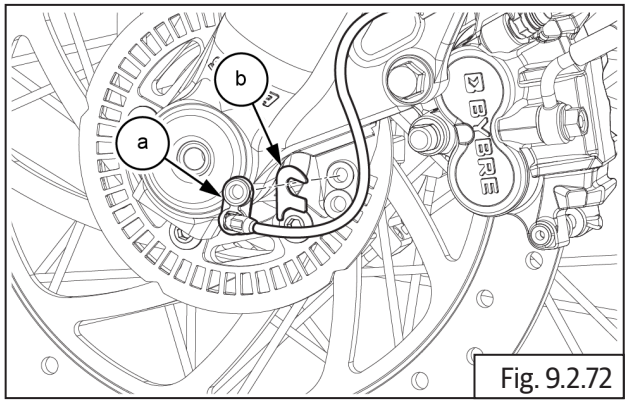

Fig. 9.2.72

9.5.5. Wheel Speed Sensor - Rear

- Ensure Ignition switch and Engine stop switch are in OFF position.
- Remove the following parts:
  - Side panel RH. (Refer-------).
  - Rider seat. (Refer-------).
  - Disconnect battery terminals and remove battery from battery carrier. (Refer-------).
- Release sensor coupler wire from the routing in mudguard **(a)** and brake hose clip on swing arm RH.

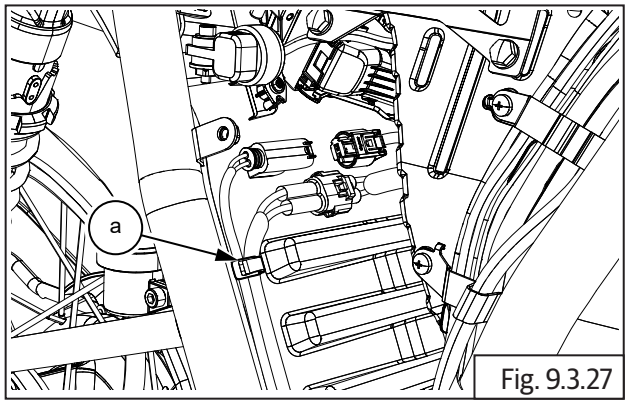

Fig. 9.3.27

- Disconnect sensor coupler **(a)** from harness near rollover sensor.

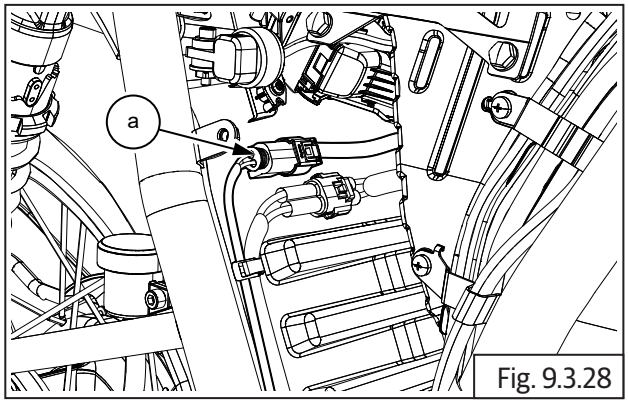

Fig. 9.3.28

- Loosen and remove Hex socket head screw **(M6) (a)** located below brake caliper on RH rear wheel.

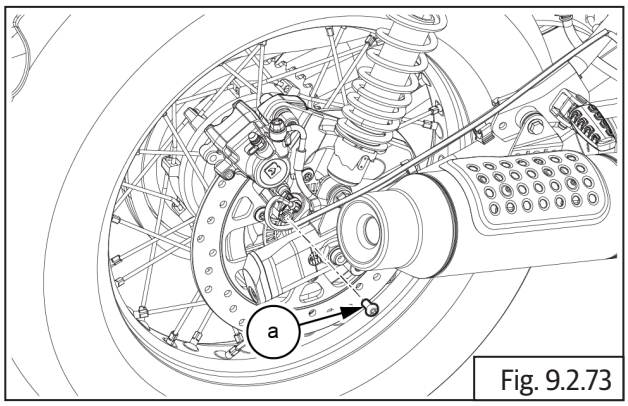

Fig. 9.2.73

	4 mm Allen socket with Ratchet

- Gently remove rear wheel speed sensor ABS **(a)** with shim **(b)** from rear wheel hub.

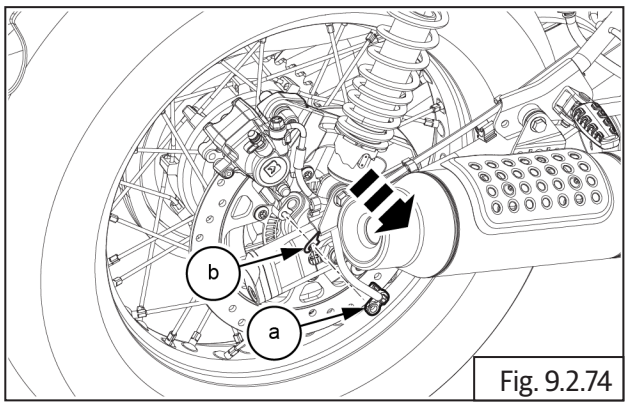

Fig. 9.2.74

Assembly

9.5.6. Wheel Speed Sensor - Rear

- Locate the wheel speed sensor **(a)** and shim **(b)** on the rear wheel caliper bracket.

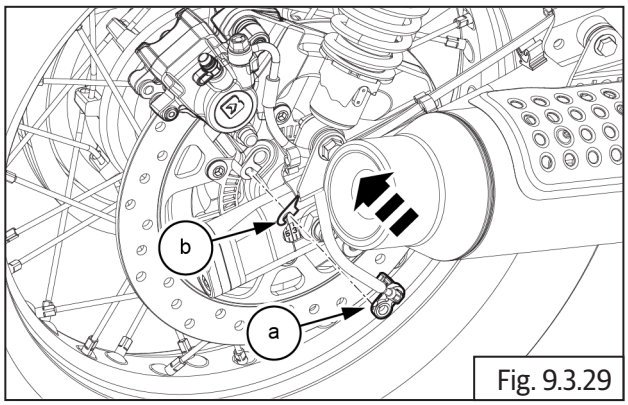

Fig. 9.3.29

- Locate and tighten hex flange head bolt **(M6) (a)** holding sensor on the top of rear wheel caliper bracket.

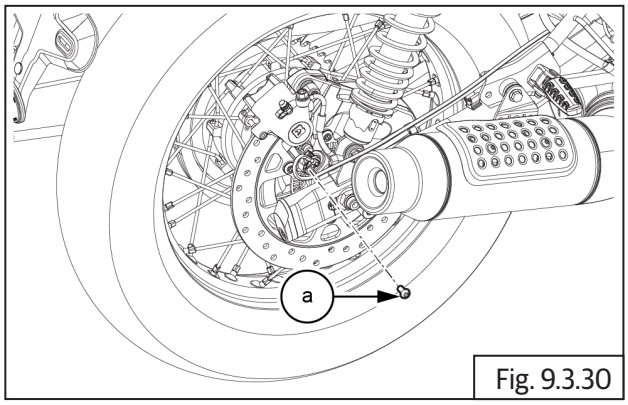

Fig. 9.3.30

	4 mm Allen socket with Ratchet
Torque	3 Nm/0.3 kgf-m

- Locate sensor coupler wire into the routing in mudguard **(a)** and brake hose clip on swing arm RH.

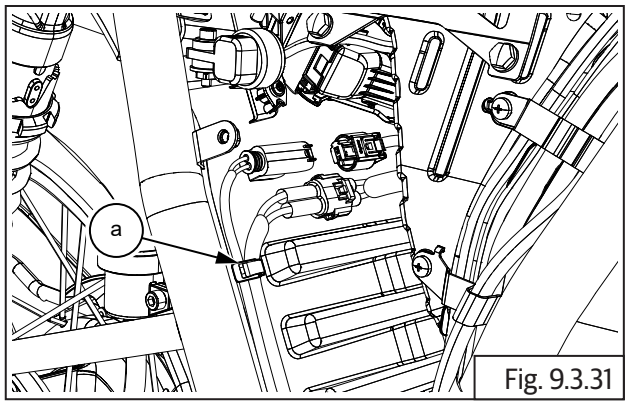

Fig. 9.3.31

- Connect sensor coupler **(a)** into harness near rollover sensor.

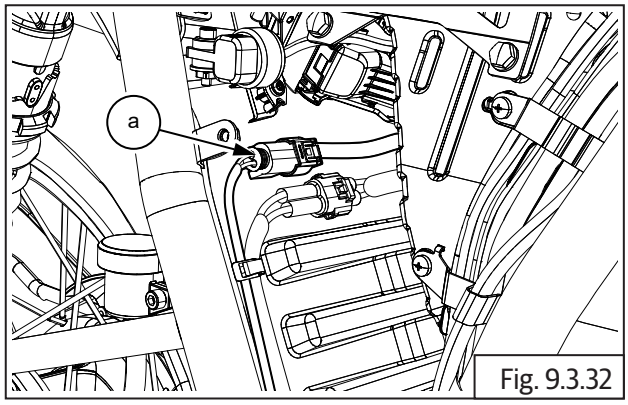

Fig. 9.3.32

- After assembling wheel speed sensor, Check the clearance between the wheel speed sensor and the pulsar ring by using feeler gauge **(a)**.
- The Gap should be approximately *1.1mm*.

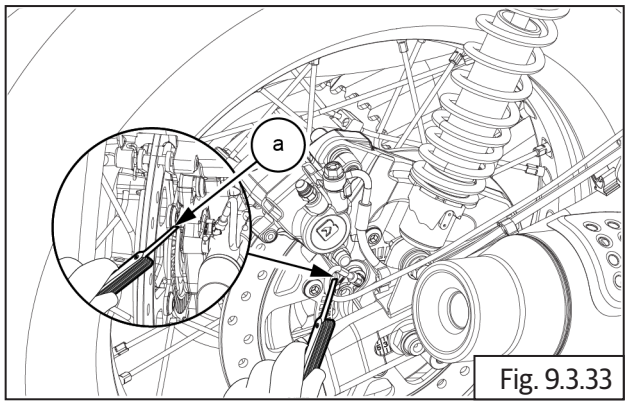

Fig. 9.3.33

	Feeler Gauge

NOTE

- *Measure the gap between the toner wheel and the sensor* **(a)**, *If it is found less than 0.5 mm then add a shim* **(b)** *in between the wheel speed sensor and caliper bracket.*

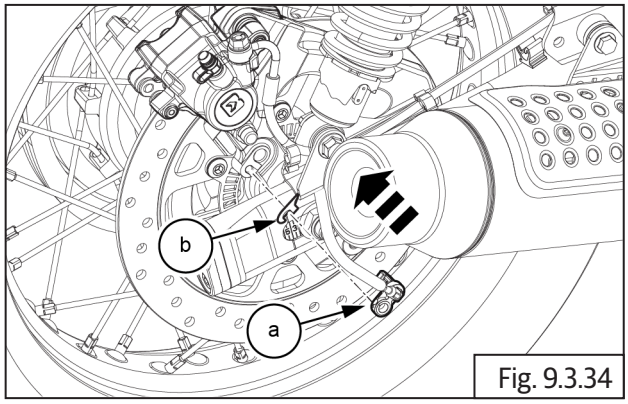

Fig. 9.3.34

- Locate battery into battery tray and connect battery terminals. (Refer-------)
- Assemble the following
  - Side panel RH. (Refer-------)
  - Rider seat. (Refer-------)

9.5.7.Wheel Speed Sensor - Front

- Locate the wheel speed sensor **(a)** and shim **(b)** on the front wheel fork LH.

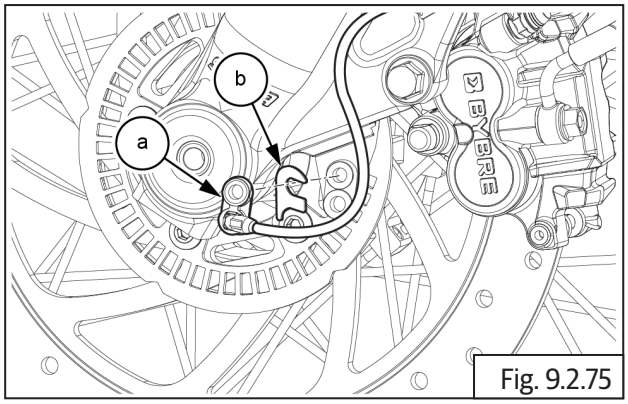

Fig. 9.2.75

- Locate and tighten hex flange bolt **(M6) (a)** holding sensor to fork end LH.

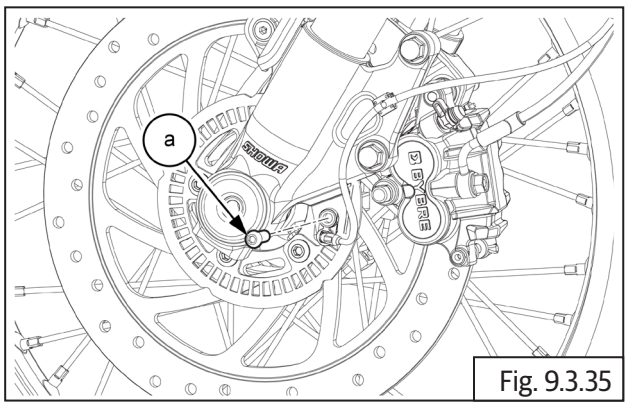

Fig. 9.3.35

	4 mm Allen socket with Ratchet
Torque	3 Nm/0.3 kgf-m

- Locate sensor coupler wire into clip **(a)** on fork end LH.

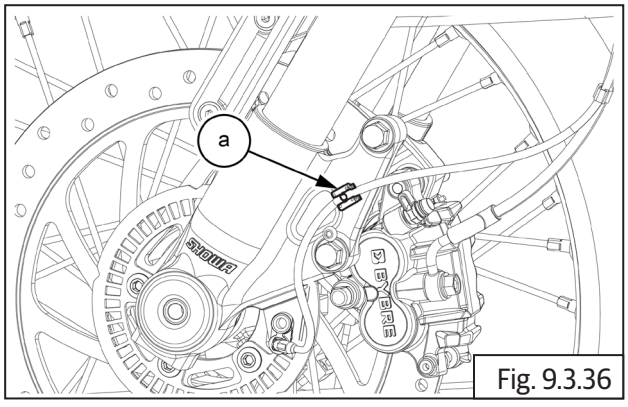

Fig. 9.3.36

- Locate sensor coupler wire mounting clamps front **(a)** into frame.

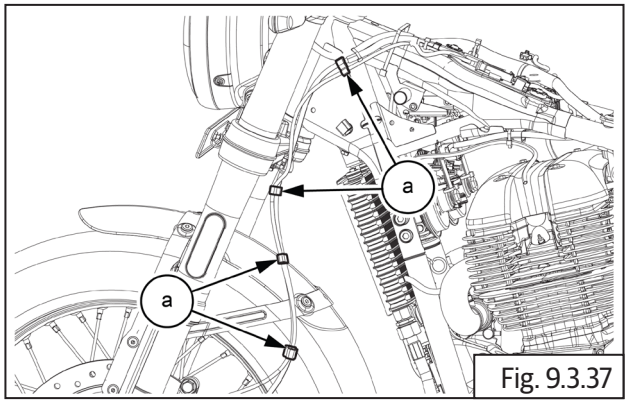

Fig. 9.3.37

- Connect sensor coupler **(a)** into harness near ABS modulator bracket.

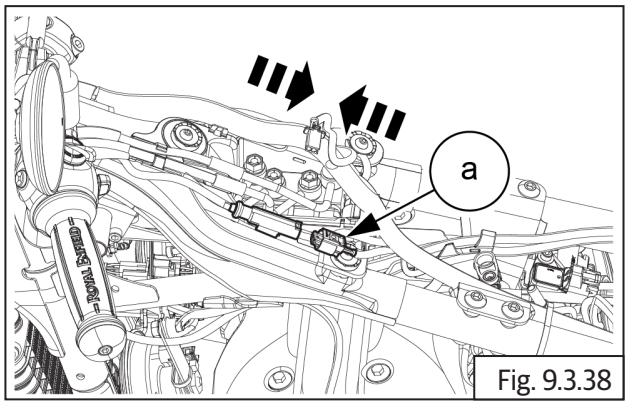

Fig. 9.3.38

- After assembling wheel speed sensor, Check the clearance between the wheel speed sensor and the pulsar ring by using Feeler Gauge **(a)**.
- The Gap should be approximately *1.0mm.*

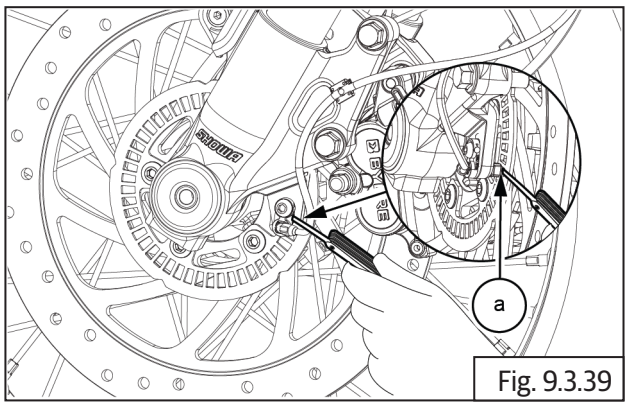

Fig. 9.3.39

	Feeler Gauge

NOTE
• *Measure the gap between the toner wheel and the sensor* **(a)**, *If it is found less than 0.5 mm then add a shim* **(b)**.

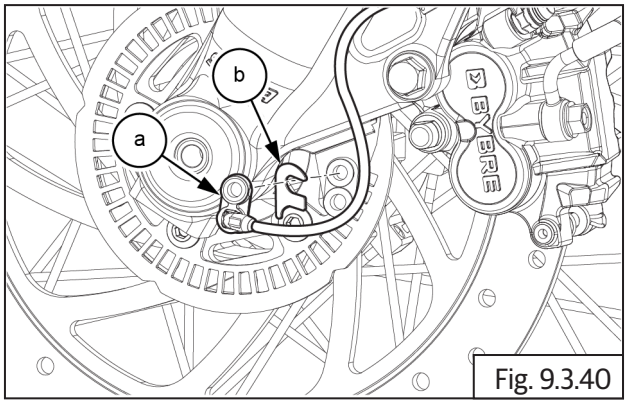

Fig. 9.3.40

⚠ WARNING
DO NOT interchange ABS unit/ECU from one motorcycle to another.

9.5.8. Modulator

- Brake hose color tags:
  - a) BLUE - Front Master Cylinder Assembly
  - b) GREEN - Front Brake Caliper
  - c) RED - Rear Brake Caliper
  - d) YELLOW - Rear Master Cylinder Assembly
- Ensure the sequence of the hoses is as per the color tags shown below.

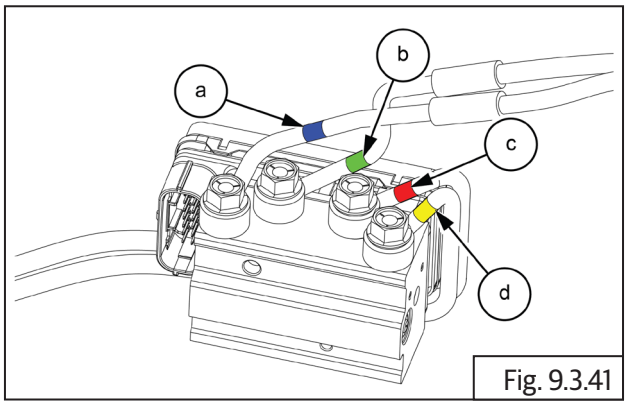

Fig. 9.3.41

- Locate 4 Nos. brake hoses into modulator.
- Support modulator suitably on a work table, keeping the color tags in mind, locate and tighten 4 Nos. banjo bolts **(a)** along with washers into modulator to fix brake hoses **(b).**

	12 mm socket with Ratchet
	27-31 Nm / 2.7 -3.1 kgf-m

- Ensure the reference marks to align properly.

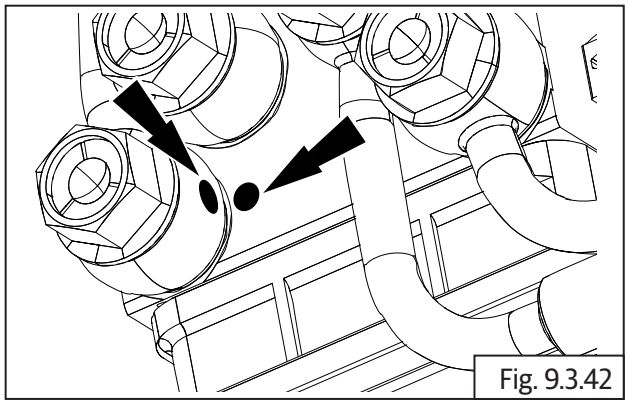
Fig. 9.3.42

- Repeat the above process to other brake hoses.
- RED - Modulator to rear brake caliper hose.

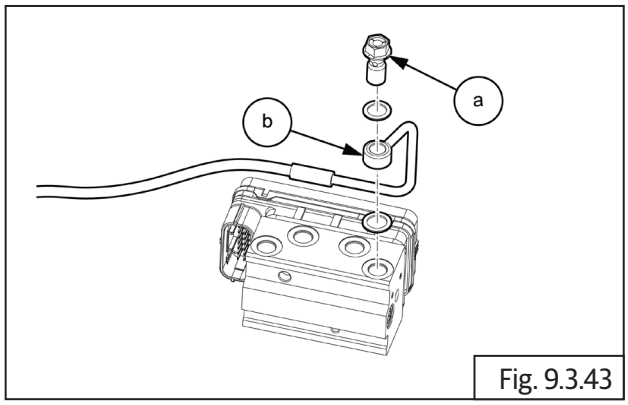

Fig. 9.3.43

- YELLOW - Modulator to rear master cylinder assembly hose.

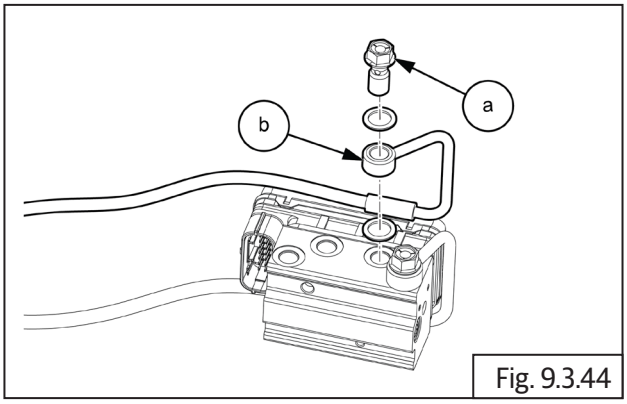

Fig. 9.3.44

- GREEN - Modulator to front brake caliper hose.

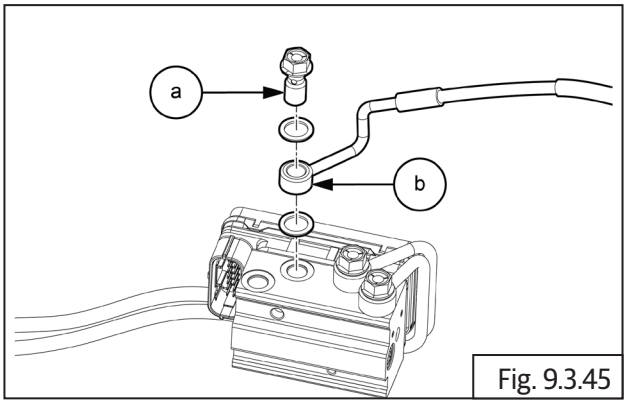

Fig. 9.3.45

- BLUE - Modulator to front master cylinder assembly hose.

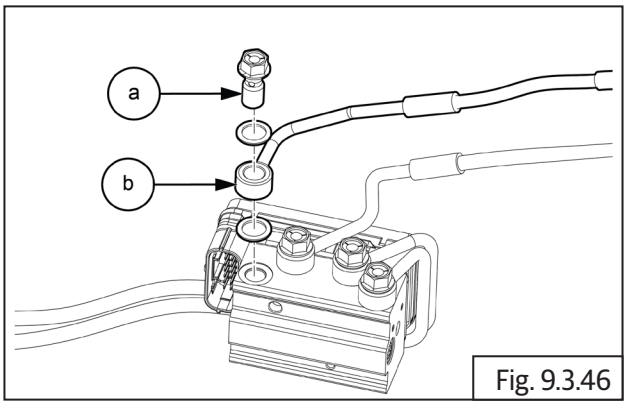

Fig. 9.3.46

- Locate the 3Nos grommets **(a)** on bracket.

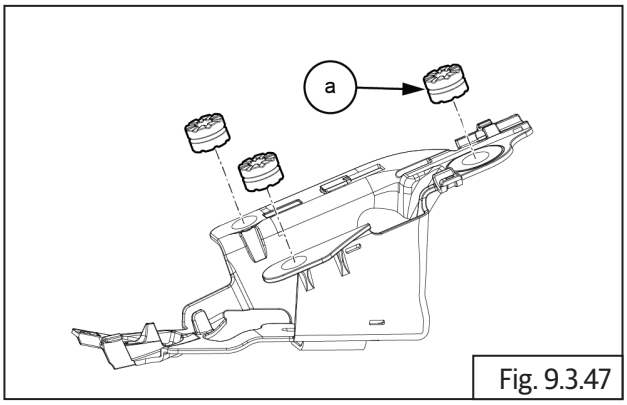

Fig. 9.3.47

- Locate the ABS modulator **(a)** into bracket **(b)** along with 4 Nos. brake hoses.

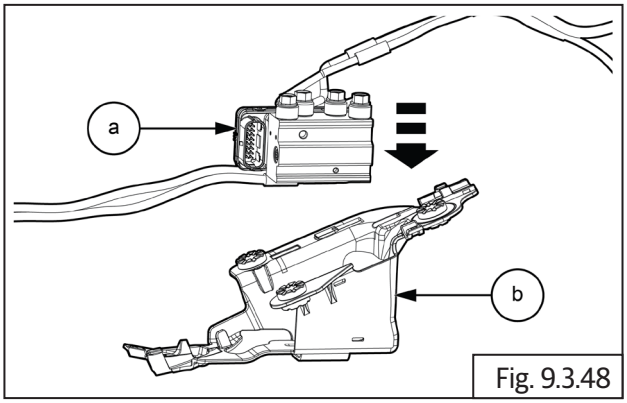

Fig. 9.3.48

- Locate and tighten hex bolt **(M6) (a)** at the LH side of bracket.

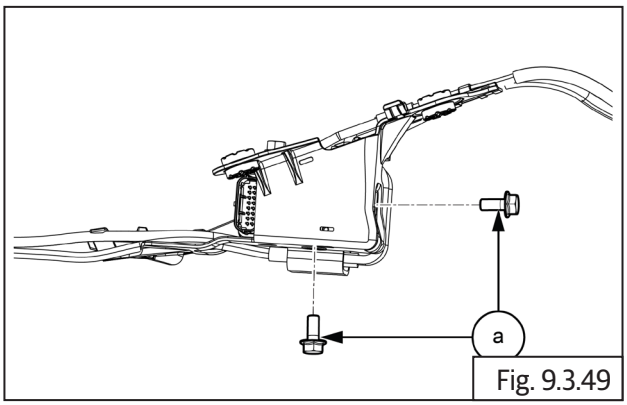

Fig. 9.3.49

	10 mm Socket with Ratchet
	9- 12 Nm / 0.9 - 1.2 kgf-m

- Gently locate and assemble modulator **(a)** along with bracket and 4 Nos. hoses into frame.

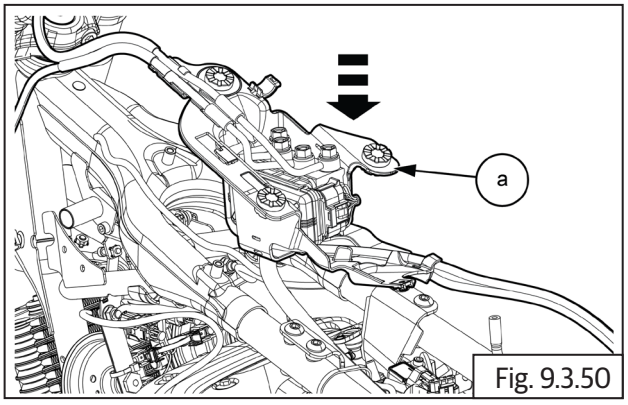

Fig. 9.3.50

- Locate and tighten 3 Nos. button head screws **(M6) (b)** and washer **(a)** holding ABS modulator mounting bracket to frame.

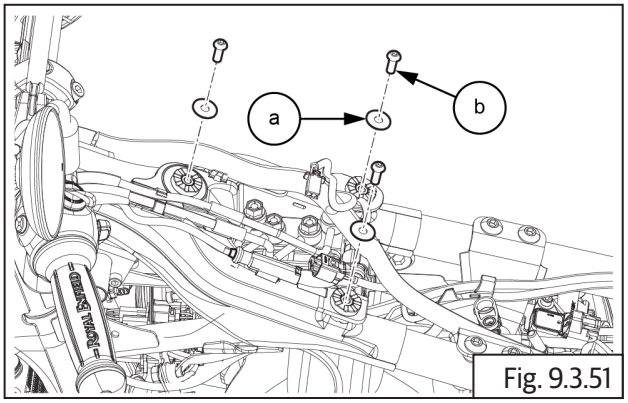

Fig. 9.3.51

	4 mm Allen socket with Ratchet
	5- 7 Nm / 0.5 - 0.7 kgf-m

- Locate and tighten hex flange bolt **(M6) (a)** on brake line bracket.

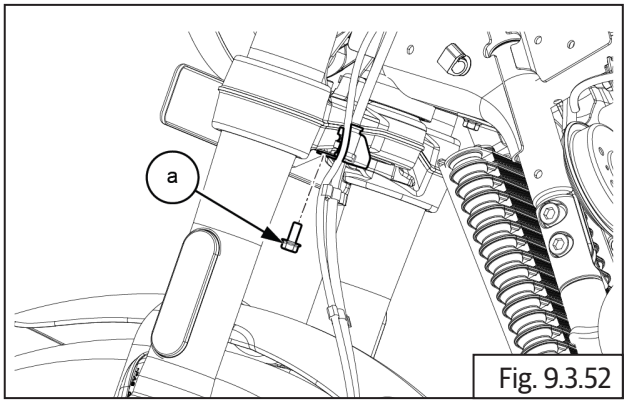

Fig. 9.3.52

	10 mm Socket with Ratchet
	9- 12 Nm / 0.9 - 1.2 kgf-m

- Locate and assemble MAP sensor into modulator bracket and connect MAP sensor connection.

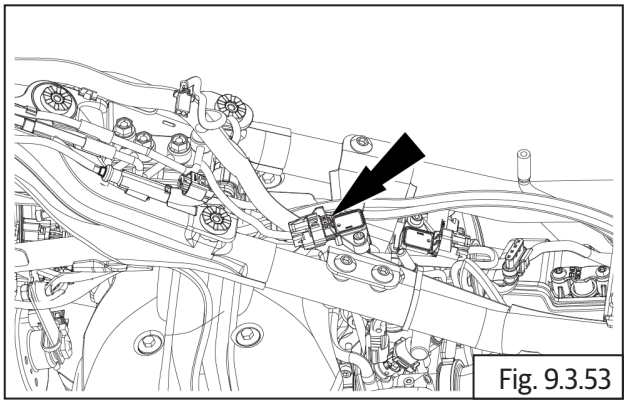
Fig. 9.3.53

- Connect front wheel speed sensor wiring connector **(a)** into harness.

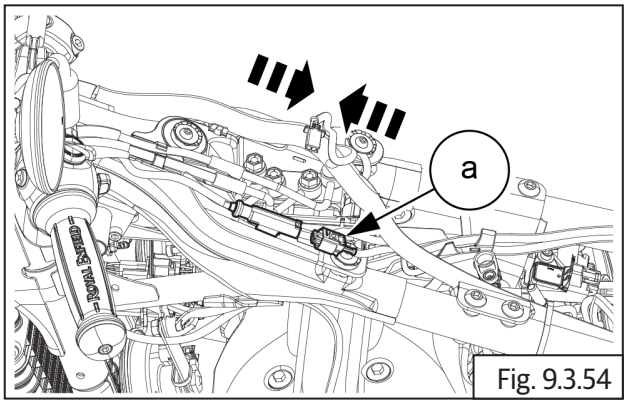

Fig. 9.3.54

- Move harness towards the bracket and locate strap holding main harness **(a)** to ABS housing bracket.

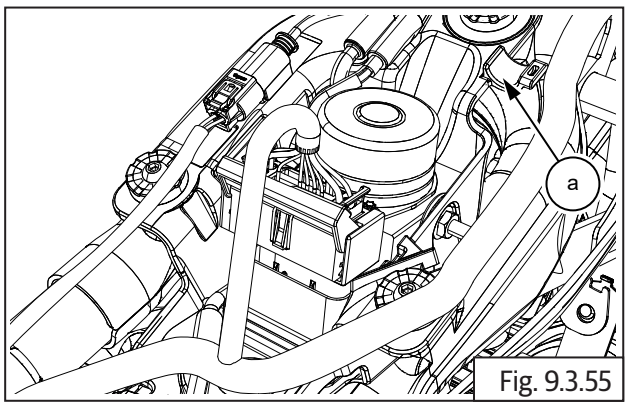

Fig. 9.3.55

- Connect ABS modulator coupler **(a)**.

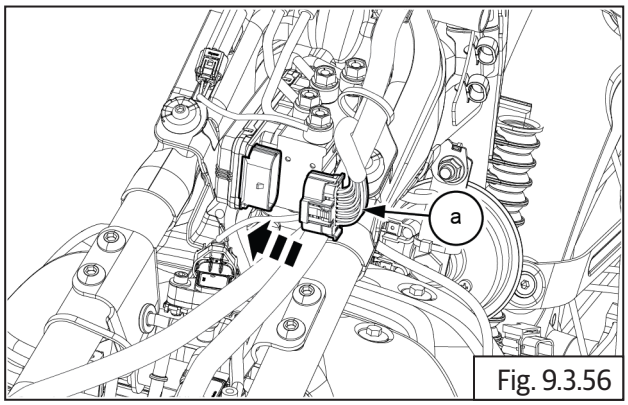

Fig. 9.3.56

- Connect holding straps **(a)** of the brake hoses to the frame/fork end/swing arm.

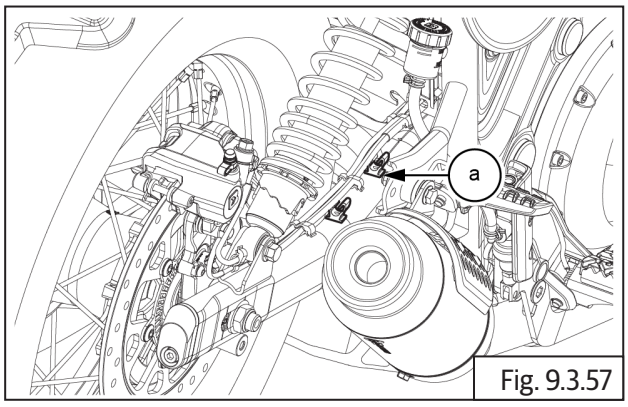

Fig. 9.3.57

- Install the top **(a)** and bottom **(b)** clamps on hose.

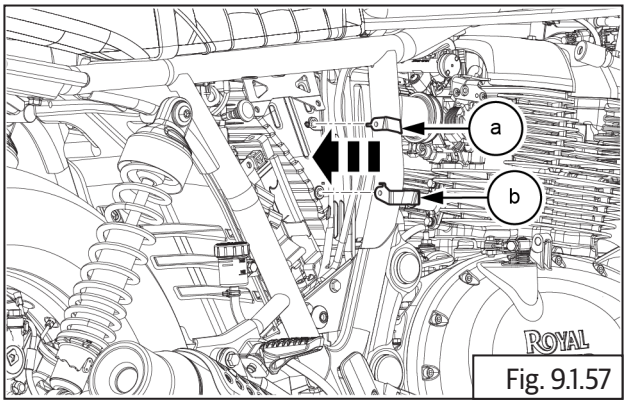

Fig. 9.1.57

- Locate and tighten the 2 Nos. pan head screws **(M5) (a)** on air filter box assembly RHS.

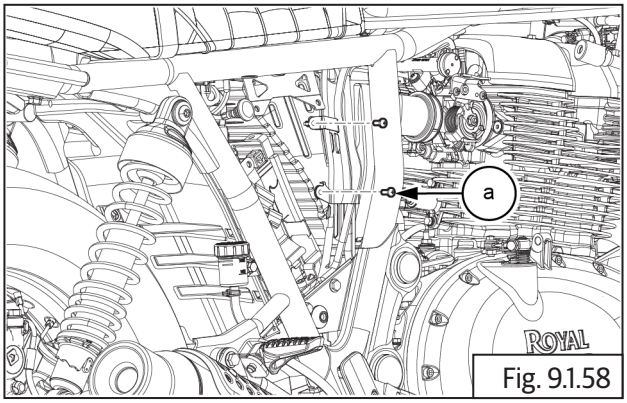

Fig. 9.1.58

	Screw driver (+)
	4- 6 Nm / 0.4 - 0.6 kgf-m

- Route the ABS hoses **(b)** in through the hook provided in the modulator bracket **(a).**

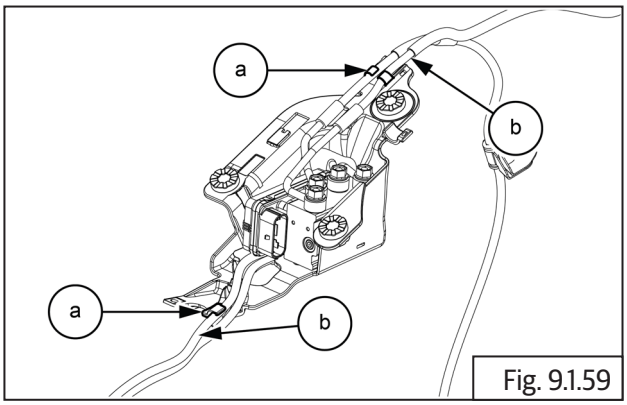

Fig. 9.1.59

- Locate brake hose mounting clamps front **(a)** into frame.

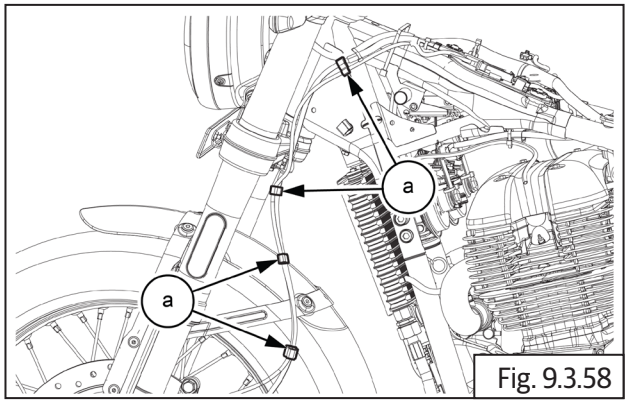

Fig. 9.3.58

- Fix tags **(a)** on the front brake hose.

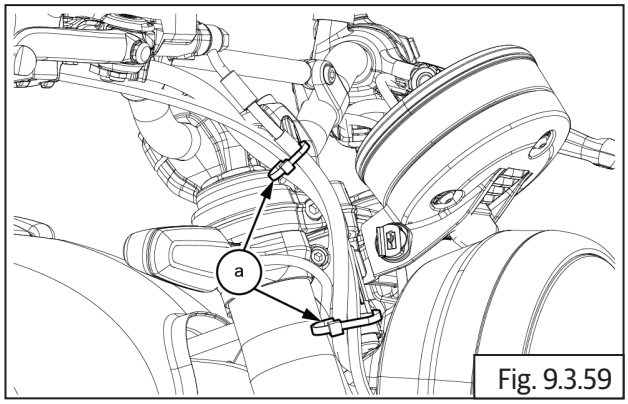

Fig. 9.3.59

- Locate and assemble banjo bolt **(a)** and connect hose **(b)** into rear master cylinder assembly.

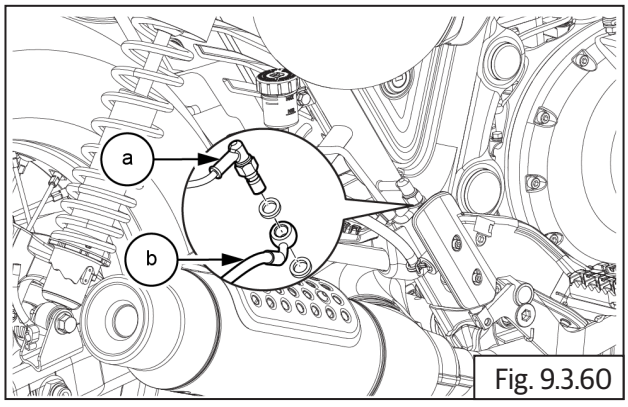

Fig. 9.3.60

	14 mm Double end spanner
	24-28 Nm/2.4-2.8 kgf-m

- Locate and assemble banjo bolt **(a)** and connect hose **(b)** and washer **(c)** into rear caliper from rear wheel RH.

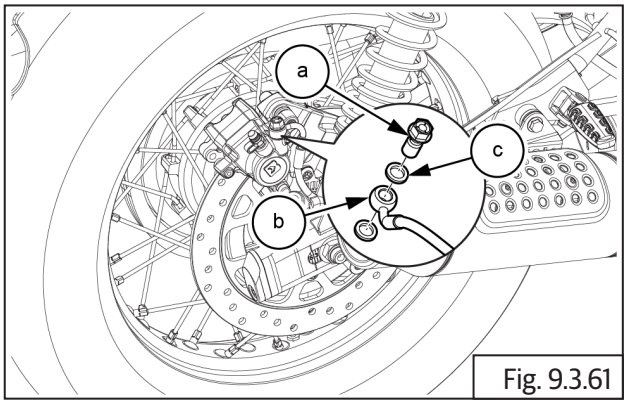

Fig. 9.3.61

	12 mm Socket with Ratchet
	24-28 Nm/2.4-2.8 kgf-m

- Locate and assemble banjo bolt **(a)** and connect hose **(b)** into front master cylinder on handlebar RH.

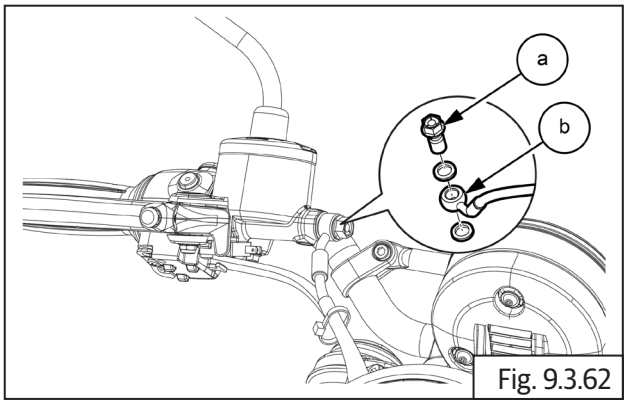

Fig. 9.3.62

	12 mm Socket with Ratchet
	24-28 Nm/2.4-2.8 kgf-m

- Locate and assemble banjo bolt **(a)** and connect hose **(b)** into front caliper on front fork LH.

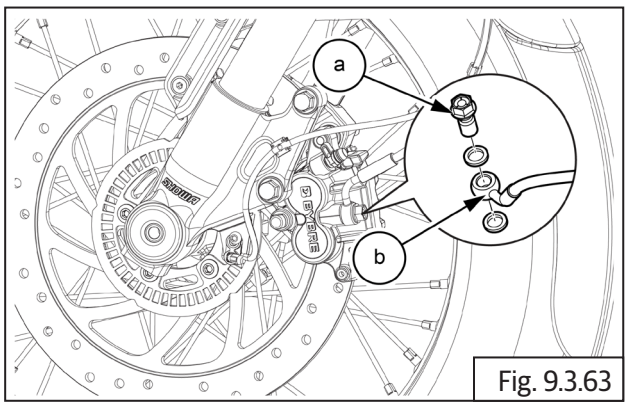

Fig. 9.3.63

	12 mm Socket with Ratchet
	24-28 Nm/2.4-2.8 kgf-m

- **Assemble the following parts:**
  - Fuel tank assembly. (Refer-------)
  - Seat. (Refer-------)
  - Side panel RH. (Refer-------)

⚠ CAUTION

After assembly of all aggregates, ensure the following:

- **Fuel is refilled/top up into fuel tank.**
- **Fuel feed and return hoses are properly connected into the fuel rail.**
- **Wiring couplers to fuel pump and low fuel sensors are properly connected.**
- **EVAP hose pipes are properly connected.**

⚠ WARNING

Gasoline is extremely flammable and highly explosive. Improper handling can lead to fatal accident or serious injury.

Bleeding the Hydraulic Brake System With DOL Tool (Front & Rear)

9.6. Bleeding the Hydraulic Brake System With DOL Tool (Front & Rear)

9.6. 1. Preparation (Front Disc Brake)

- Use a Philips screwdriver to loosen and remove the screws of the front disc brake master cylinder.
- Remove the cap, and Diaphragm Plate with diaphragm.
- Remove the dust cap and place the suitable ring spanner on the bleeder nipple and attach a Vinyl Pipe (transparent).
- Thereafter, take a Clean glass / Plastic container (transparent) with fresh brake fluid, and dip the other end of the vinyl pipe (transparent) in it (make sure that the vinyl pipe is always submerged in the fluid during the bleeding process).

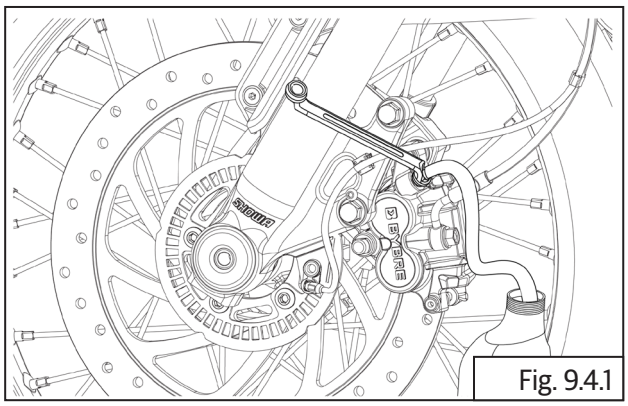

Fig. 9.4.1

- Connect the DOL tool switch "ON" the ignition.

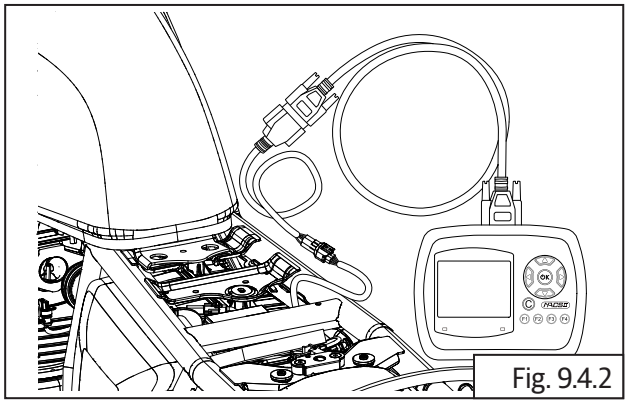

Fig. 9.4.2

Procedure

- Select – F1 Diagnosis.

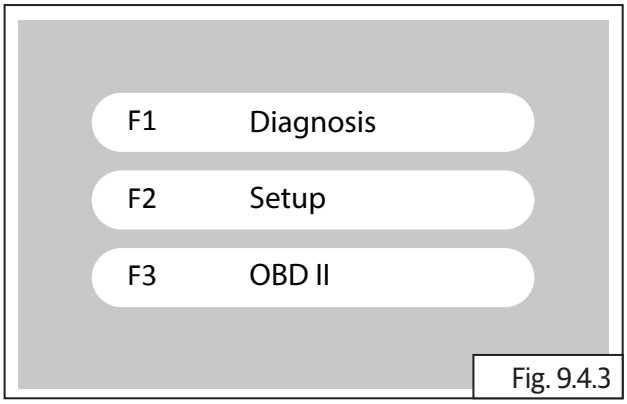

Fig. 9.4.3

- Select – Bike Model.

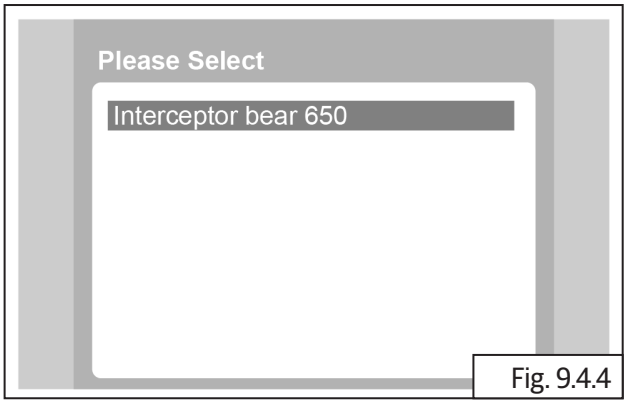

Fig. 9.4.4

- Select – Bosch ABS.

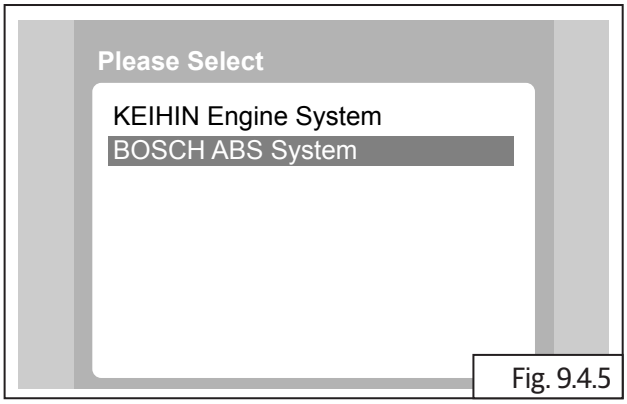

Fig. 9.4.5

- Default Screen.

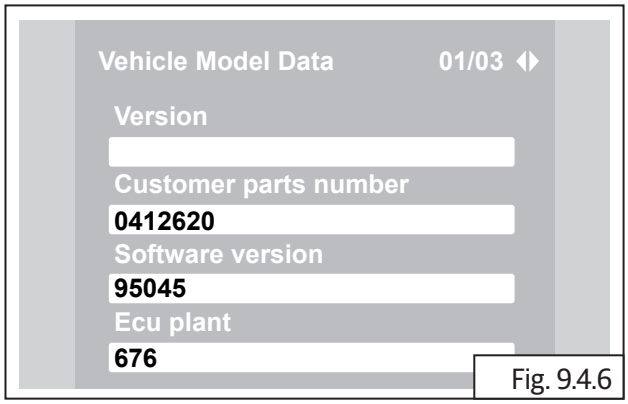

Fig. 9.4.6

- Press C.



Fig. 9.4.7

- Select - Spl Function.

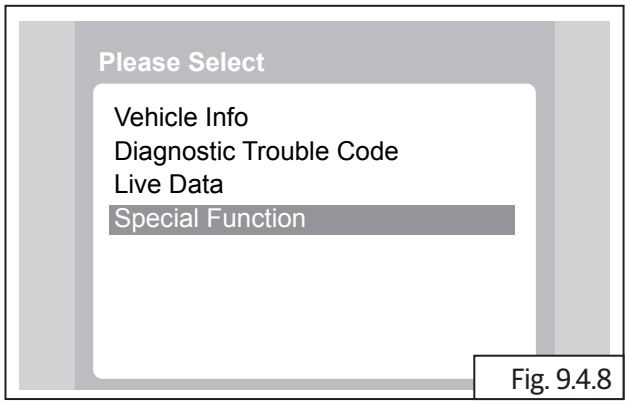

Fig. 9.4.8

- Select - Repair Air Bleed.

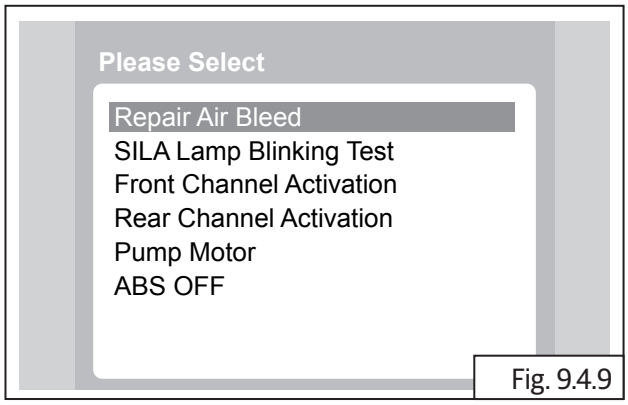

Fig. 9.4.9

- Default Screen.

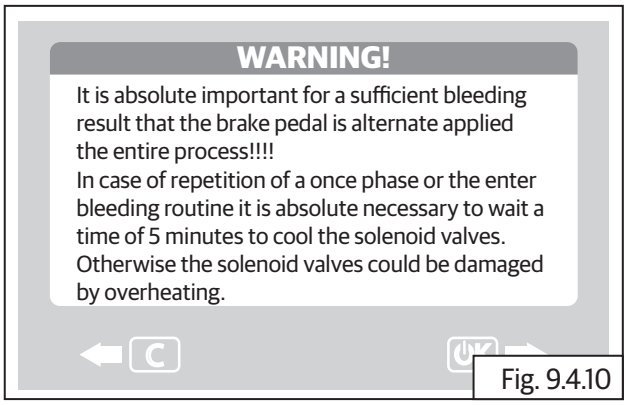

Fig. 9.4.10

- Default Screen.

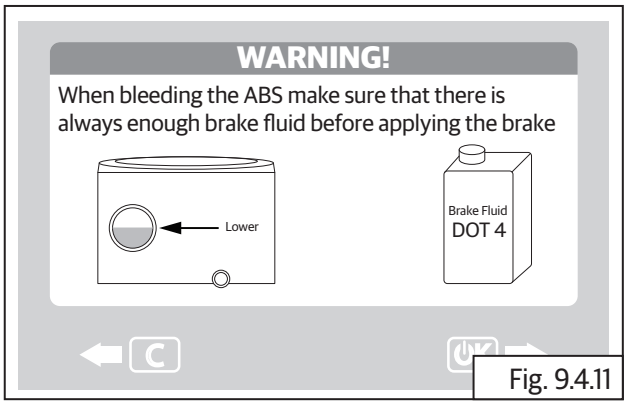

Fig. 9.4.11

- Loosen the bleeder nipple.

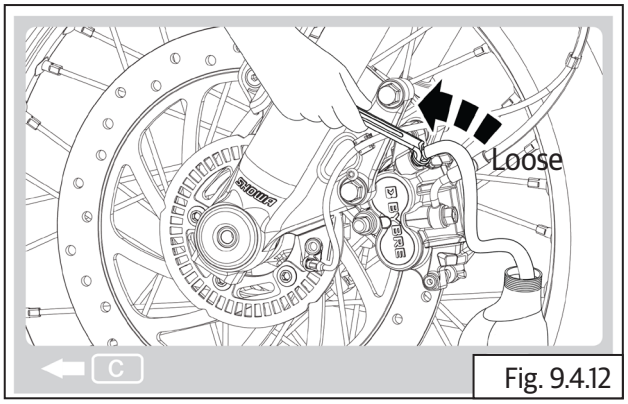

Fig. 9.4.12

- Operate the brake lever.

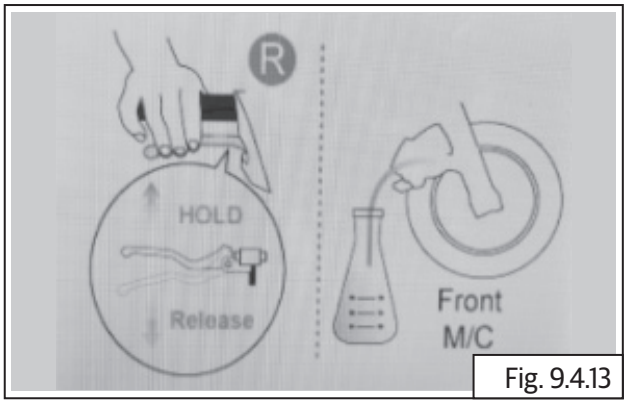

Fig. 9.4.13

- Hold the brake lever in pressed condition and tighten the bleeder nipple.

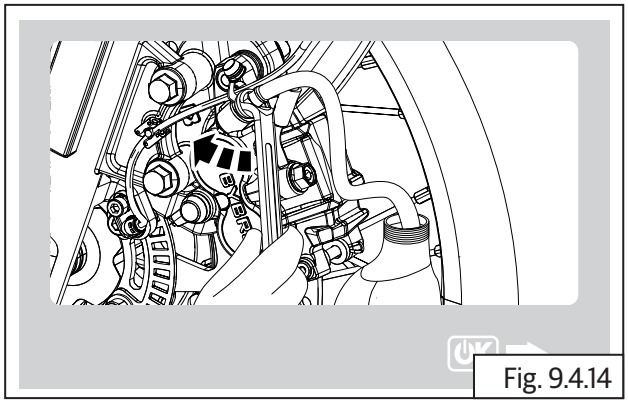

Fig. 9.4.14

- Loosen the bleeder nipple – (Brake lever in released condition).

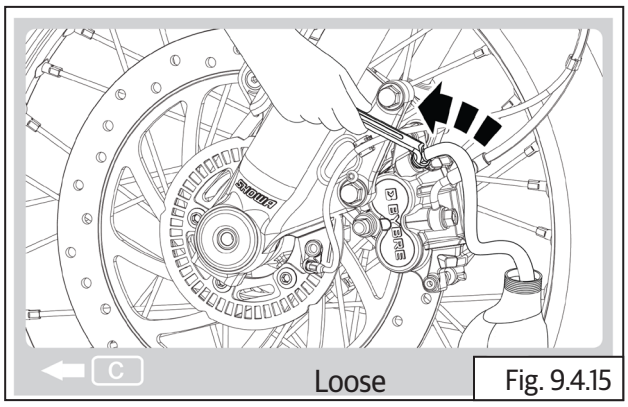

Fig. 9.4.15

- Operate the brake lever till the next window open in DOL.

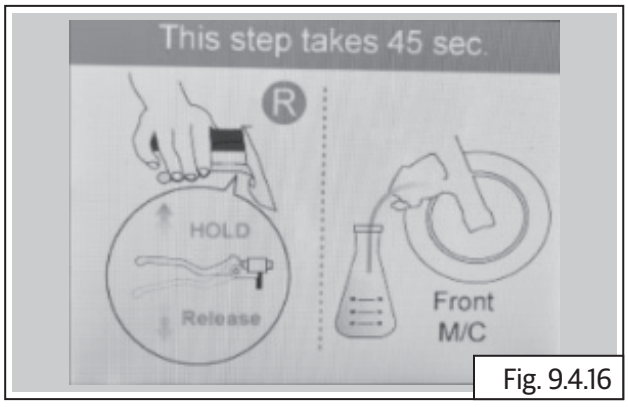

Fig. 9.4.16

- Hold the brake lever in pressed condition and tighten the bleeder nipple.

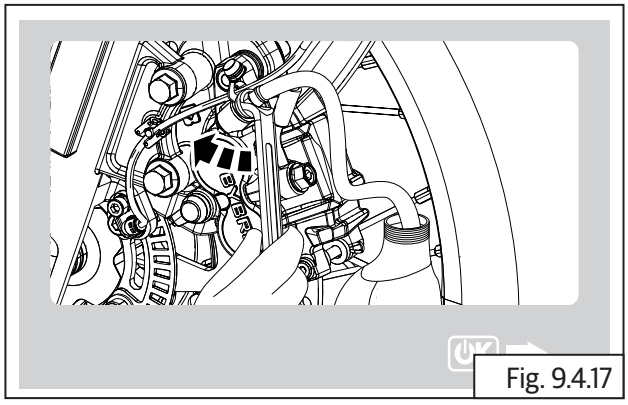

Fig. 9.4.17

- During this operation pump will run and expel the air trapped in the system through bleeder nipple.

9.6.2 Reassembly

- Switch OFF the ignition.
- Disconnect the DOL Tool.
- Remove the vinyl pipe and remove the ring spanner.
- Refit the dust cap (make sure that there is no leak from the bleeder nipple).
- Refit the diaphragm with diaphragm plate of the master cylinder.
- Refit the master cylinder cap taking care that the vent slot in the cap is facing rider.

9.6.3 Preparation (Rear Disc Brake)

- Remove the reservoir cap of the rear disc brake.
- Remove the Diaphragm Plate with diaphragm.
- Remove the dust cap and place the suitable ring spanner on the bleeder nipple.
- Attach a Vinyl Pipe (transparent).
- Thereafter, take a Clean glass / Plastic container (transparent) with fresh brake fluid, and dip the other end of the vinyl pipe (transparent) in it (make sure that the vinyl pipe is always submerged in the fluid during the bleeding process).

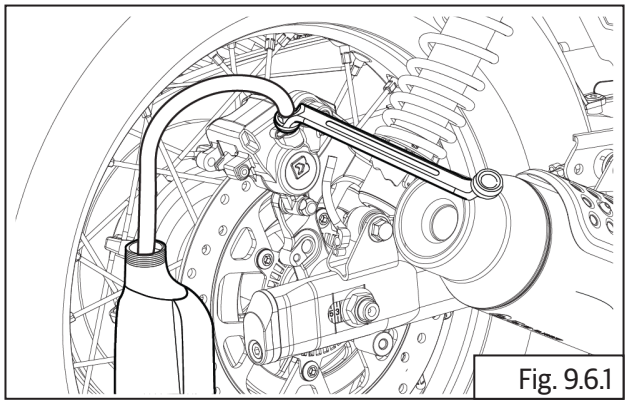

Fig. 9.6.1

- Connect the DOL tool switch on the ignition

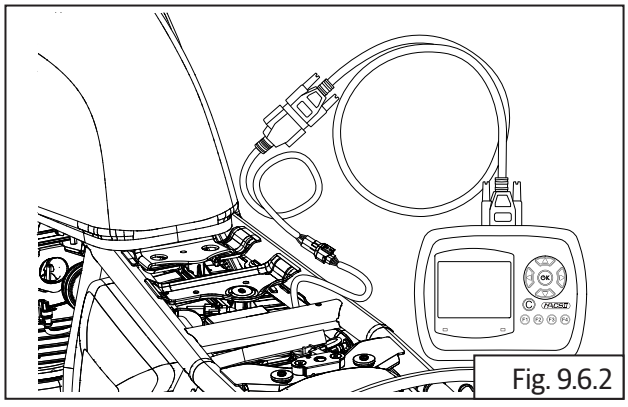

Fig. 9.6.2

- Loosen the bleeder nipple.

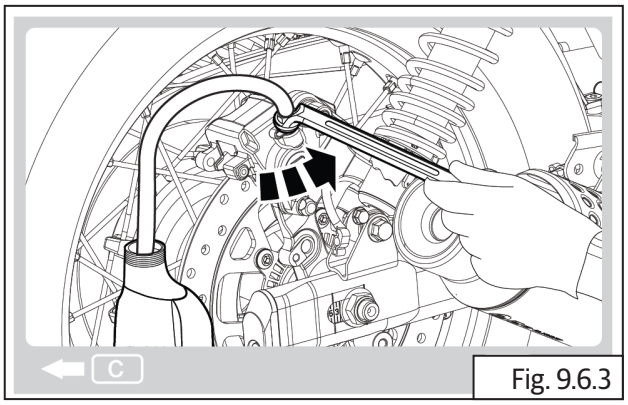

Fig. 9.6.3

- Default Screen.

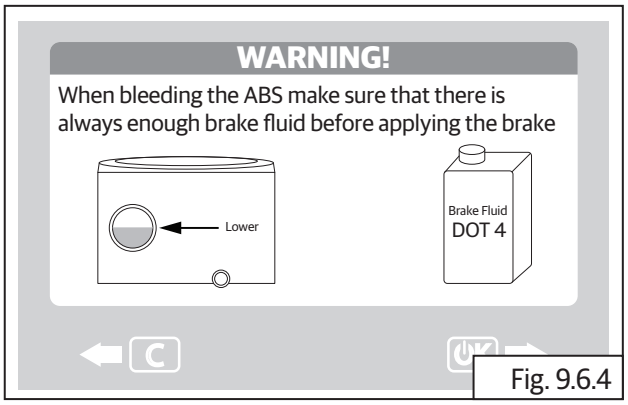

Fig. 9.6.4

- Operate the brake lever.

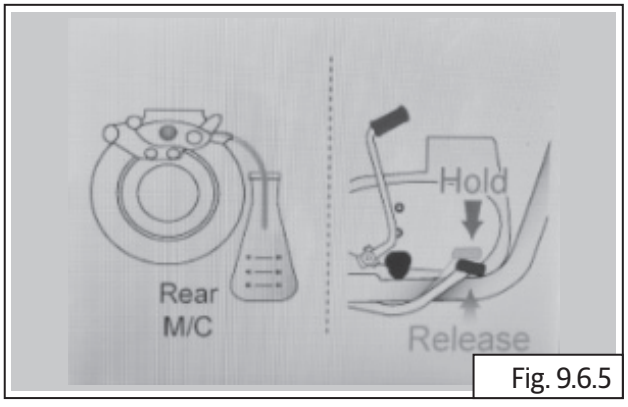

Fig. 9.6.5

- Hold the brake pedal in pressed condition and tighten the bleeder nipple.

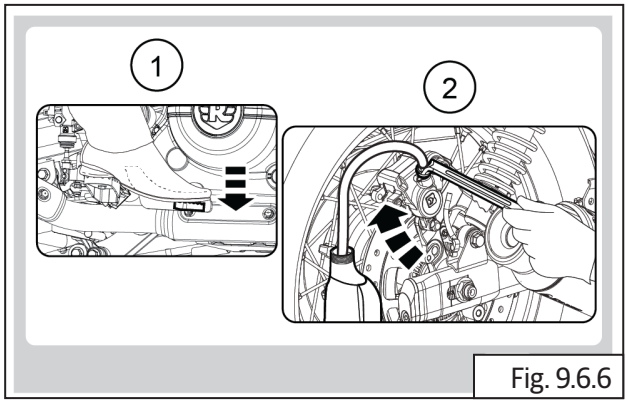

Fig. 9.6.6

- Loosen the bleeder nipple – (Brake lever in released condition)

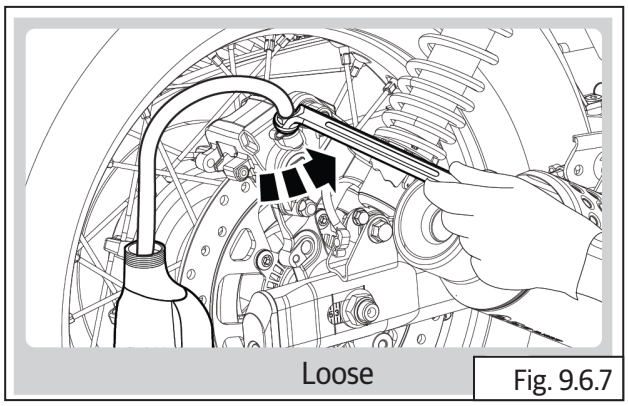
Loose
Fig. 9.6.7

- Operate the brake lever until the next window opens in DOL.

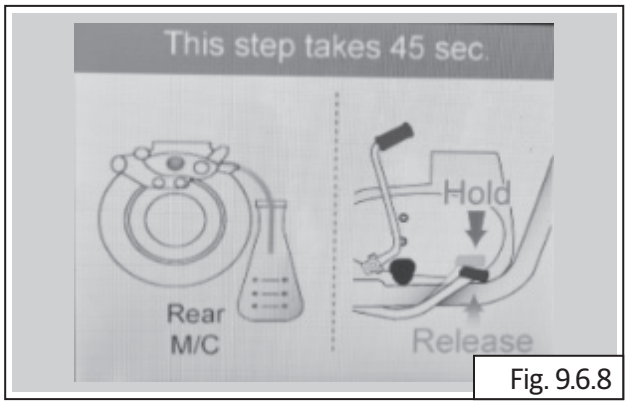

Fig. 9.6.8

- Hold the brake pedal in pressed condition and tighten the bleeder nipple.

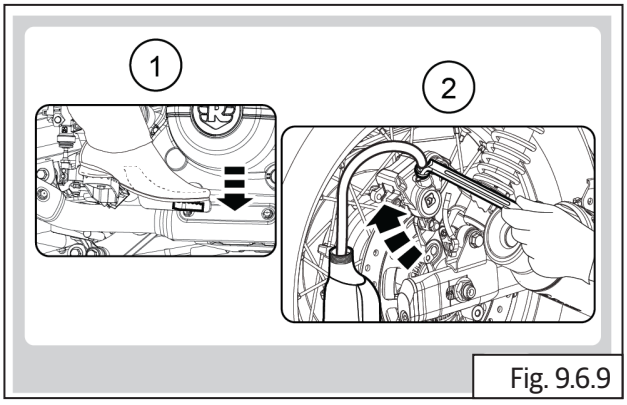

Fig. 9.6.9

- During this operation pump will run and expel the air trapped in the system through bleeder nipple

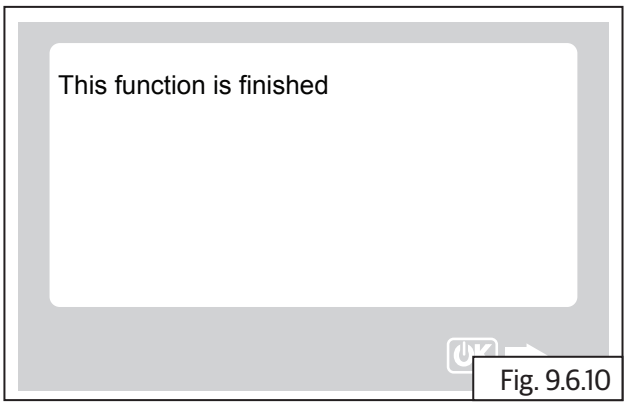

Fig. 9.6.10

9.6.4 Reassembly

- Switch OFF the ignition and disconnect and remove the DOL tool.
- Remove the vinyl pipe and remove the ring spanner.
- Refit the dust cap (make sure that there is no leak from the bleeder nipple).
- Refit the diaphragm with diaphragm plate of the reservoir.
- Refit the reservoir cap.

BRAKE BLEEDING (Front & Rear)

Manual Method

9.7. Brake Bleeding

⚠ CAUTION

Ensure the motorcycle is upright on a firm and flat surface.

Support motorcycle with suitable equipment below cradle frame.

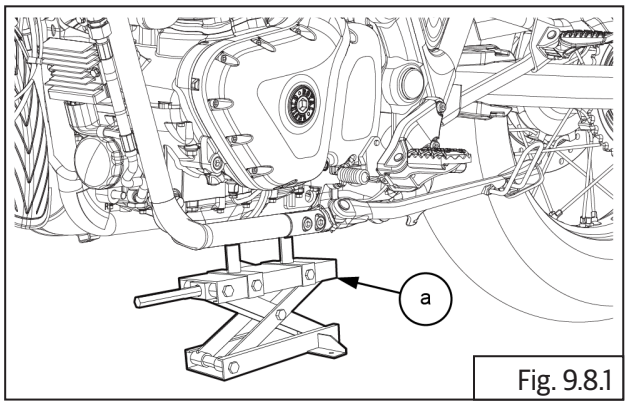

Fig. 9.8.1

⚠ CAUTION

Do not spill brake fluid on any part of the motorcycle as it will damage the painted/ plastic surfaces.

⚠ WARNING

Ensure brake fluid does not get in contact with eyes and skin. In-case of exposure wash affected area thoroughly with water. Seek medical attention immediately if any irritation persists.

Keep out of reach of children.

Dispose drained brake fluid carefully and responsibly.

⚠ WARNING

Brake fluid is Hygroscopic hence, absorbs moisture from air. Ensure fluid reservoirs caps are closed properly.

If moisture in the brake system may cause damage to brake parts and fluid, causing reduction in braking efficiency; which in turn may lead to fatal accidents.

NOTE

- *Use brake fluid from sealed containers only.*
- *Use only DOT4 specification brake fluid listed in technical specifications.*
- *Ensure ignition switch and stop switch are in ON position.*

9.7.1. Front Brake Bleeding

- Loosen and remove 2 Nos. screws **(a)** from front brake reservoir tank.

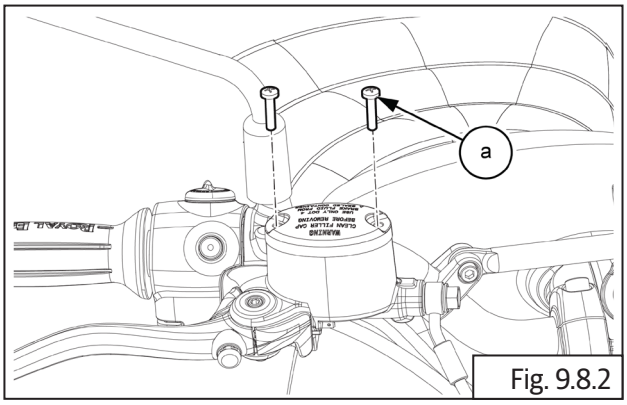

Fig. 9.8.2

	Screw driver phillips

- Remove reservoir cap **(a)** from front brake reservoir tank.

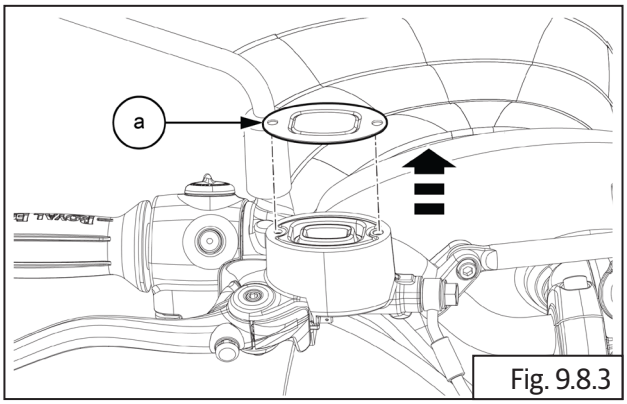

Fig. 9.8.3

- Remove reservoir diaphragm **(a)** from front brake reservoir tank.

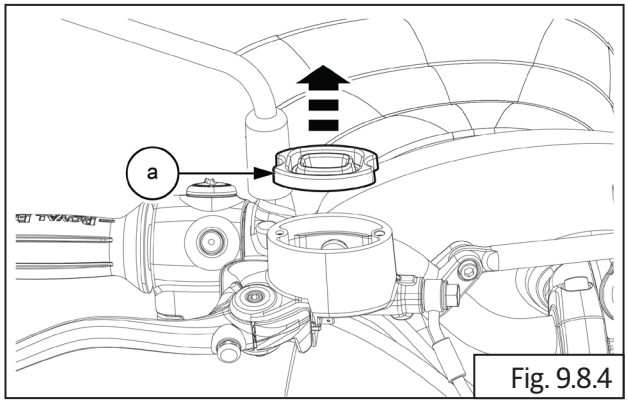

Fig. 9.8.4

- Gently top up fresh brake fluid **(a)** into reservoir.
- Do not over fill as it may cause malfunctioning of some parts due to brake fluid spillage.

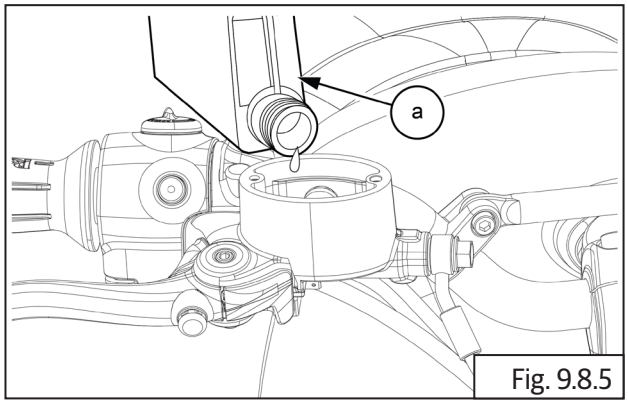

Fig. 9.8.5

- Locate diaphragm and cap **(a)** on the reservoir and DO NOT fasten with screws.

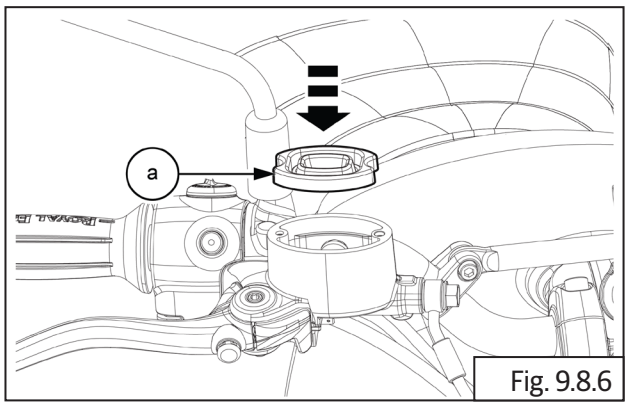

Fig. 9.8.6

- Remove rubber cap **(a)** from bleeder valve from front caliper on front wheel RH.

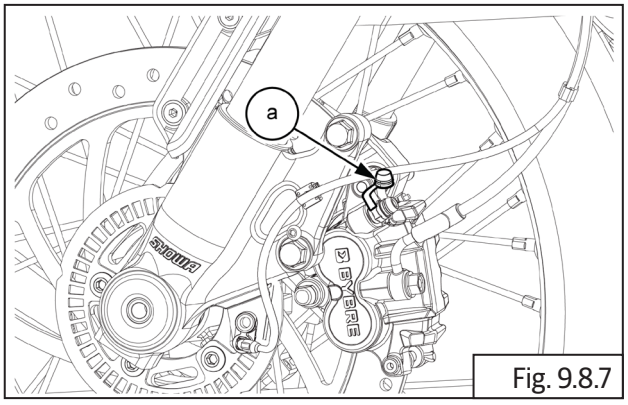

Fig. 9.8.7

- Dip bleeder hose **(a)** one end into a container **(b)** with fresh brake fluid to avoid air passage into bleeder valve.
- Insert bleeder hose other end into bleeder valve **(c)** on front caliper to drain used oil.

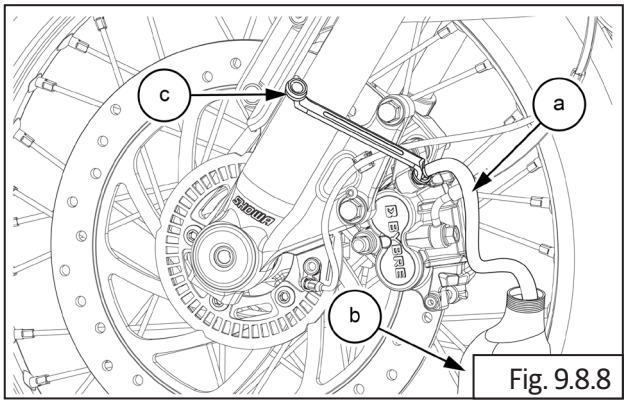

Fig. 9.8.8

	11 mm Ring spanner

NOTE

- *Use brake fluid from new, sealed containers only.*
- *Use only DOT4 specification brake fluid listed in technical specifications (Refer section 2.4).*

- Gently pump brake lever until brake is effective.
- Once brake lever is effective, hold it in place.

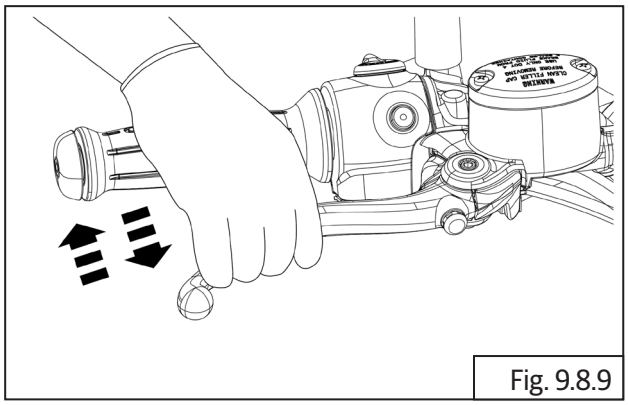

Fig. 9.8.9

- While holding brake lever, quickly open and close bleeder valve **(M6) (a)**.

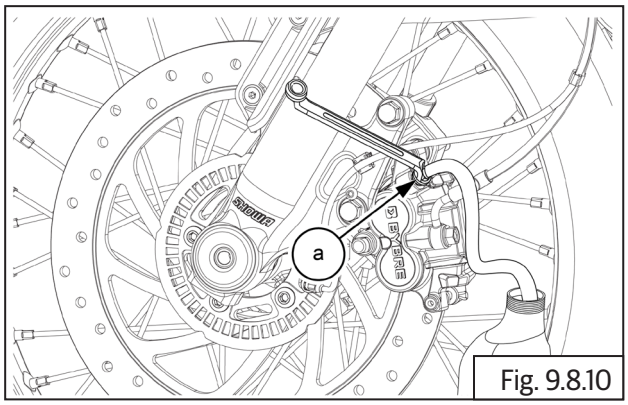

Fig. 9.8.10

	11 mm Ring spanner and air bleeder.

- Release the brake lever.

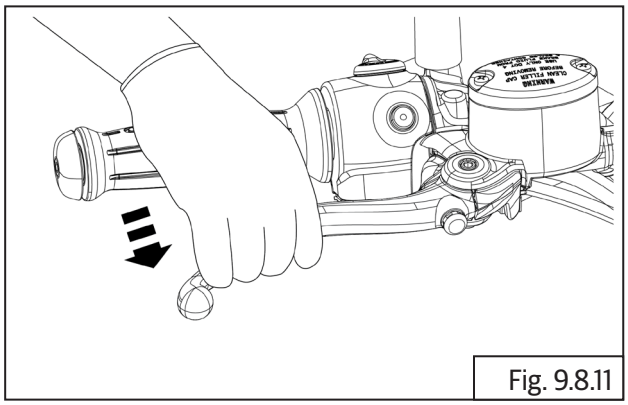

Fig. 9.8.11

- Gently top up fresh brake fluid **(a)** into reservoir.
- Do not over fill as it may cause malfunctioning of some parts due to brake fluid spillage.

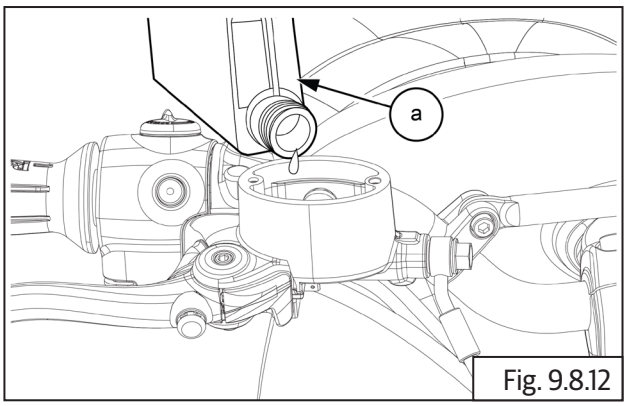

Fig. 9.8.12

- Repeat this operation until air from the system is released completely. Observe bleeder hose. As air in the system is cleared, bubbles stop appearing in hose.

⚠ CAUTION

While bleeding the brake system always ensure brake fluid is above min level BUT below "Max" level. Never allow the brake fluid go below minimum level to avoid air entering brake system. Always fill the brake fluid from sealed container only.

Do not leave the master cylinder cap and or brake fluid container open for long as brake fluid is highly hygroscopic in nature a and will loose its properties if exposed to atmospheric conditions.

- Inspect brake lever efficiency.

NOTE

- *The fluid level must be checked often during the bleeding operation and top up with fresh brake fluid as necessary.*
- *Gently tap brake hose for proper bleeding performance.*
- *Check brake fluid level after completion of brake bleeding.*
- *Whenever the modulator is removed or replaced the brake bleeding time will be longer as brake fluid will have to travel from master cylinder to modulator and then to wheel caliper*
- *Whenever bleeding the brake system, it is always recommended to bleed both the front and rear brakes.*

- Remove bleeder hose **(a)** from bleeder valve **(b)**.

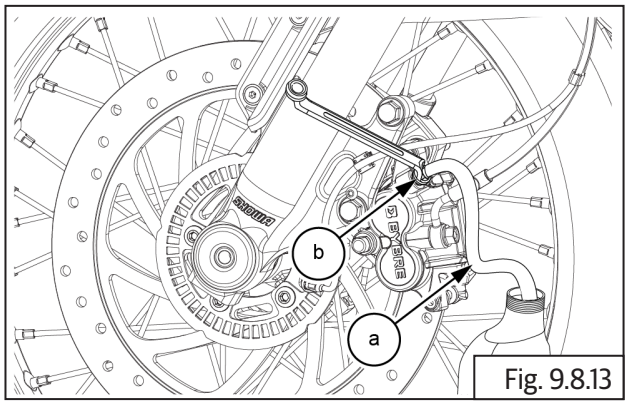

Fig. 9.8.13

	11 mm Ring spanner

- Close rubber cap **(a)** on bleeder valve**.**
- Ensure cap is locked properly to avoid exposure to dust or mud.

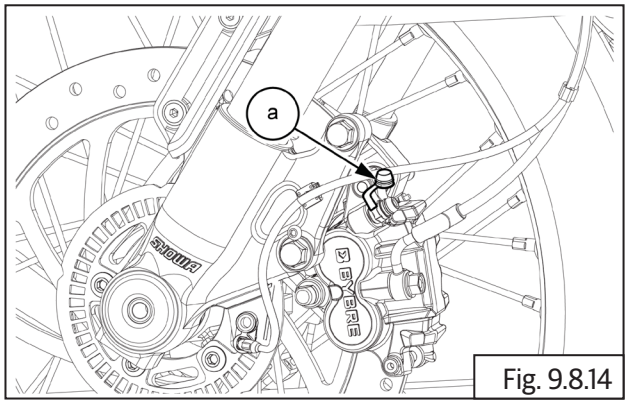

Fig. 9.8.14

- Install reservoir diaphragm **(a)** into front brake reservoir tank.

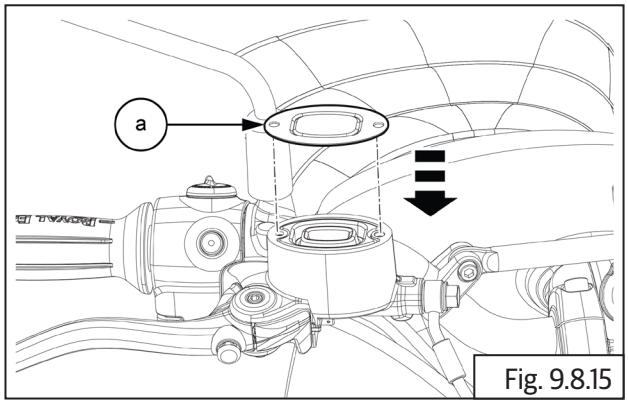

Fig. 9.8.15

- Locate and tighten 2 Nos. screws **(a)** into front brake reservoir tank.

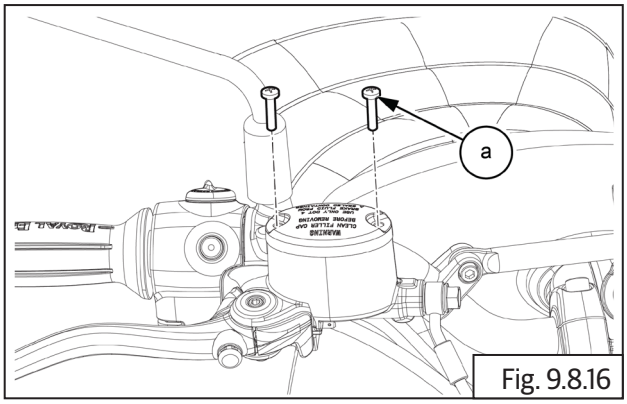

Fig. 9.8.16

	Screw driver
	0.8 - 1.5 Nm / 0.08 - 0.15 kgf-m

9.7.2. Front Brake Fluid Leakage

⚠ CAUTION

Ensure motorcycle is placed on a flat surface resting it on ramp/center stand.

- Inspect fluid level, visible in window glass on front reservoir tank **(a)**.
- Ensure brake fluid level is always above 'MIN' mark **(b)** on window.

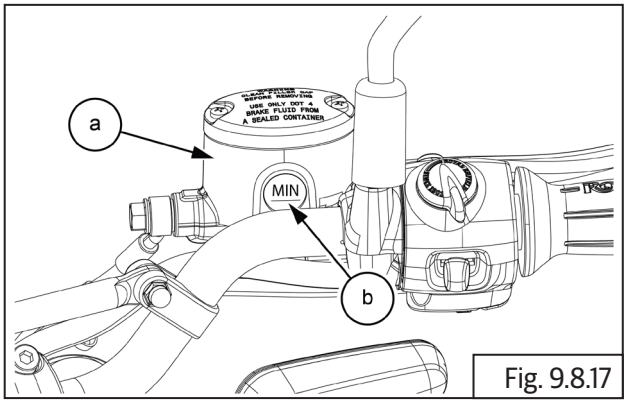

Fig. 9.8.17

- If oil level is below 'MIN', inspect leakage at front brake hoses and front master cylinder banjo bolt.

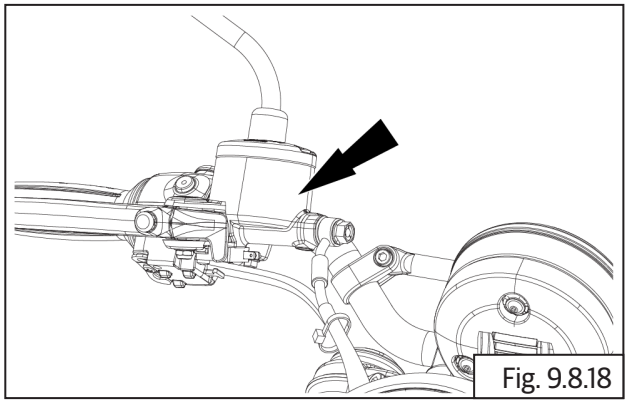

Fig. 9.8.18

- Inspect leakage at caliper banjo bolt.

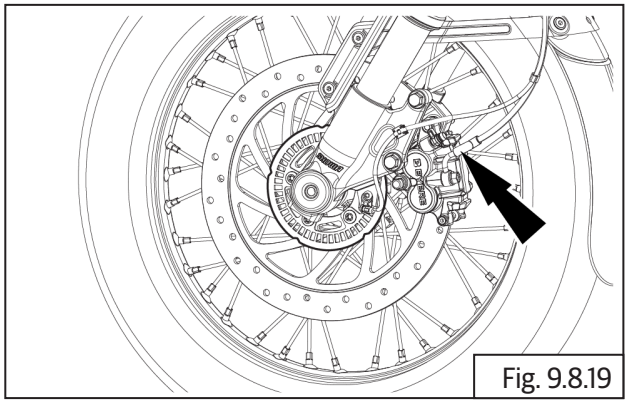

Fig. 9.8.19

- Inspect leakage on brake disc from caliper piston.

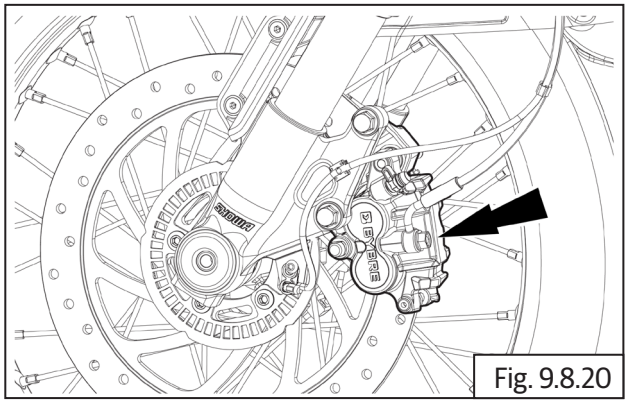

Fig. 9.8.20

- Inspect fluid leakage at hoses at ABS modulator.

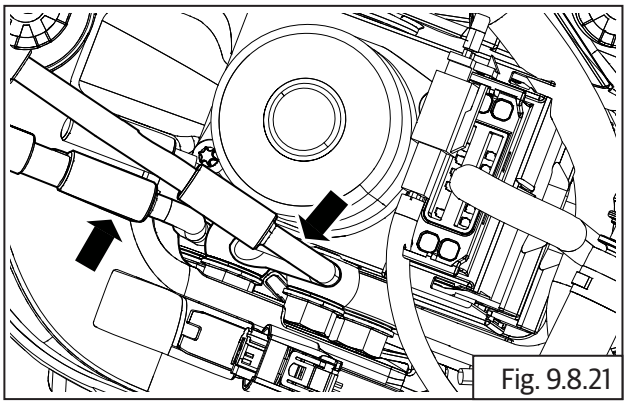

Fig. 9.8.21

9.7.3. Front Brake Fluid Top up

- Loosen and remove 2 Nos. screws **(a)** from front brake reservoir tank.

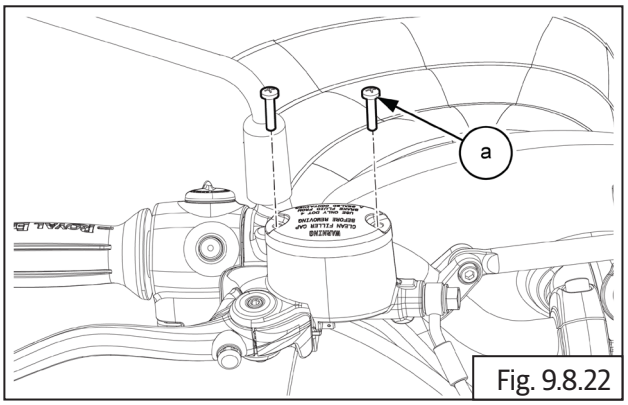

Fig. 9.8.22

	Screw driver

- Remove reservoir cap **(a)** from front brake reservoir tank.

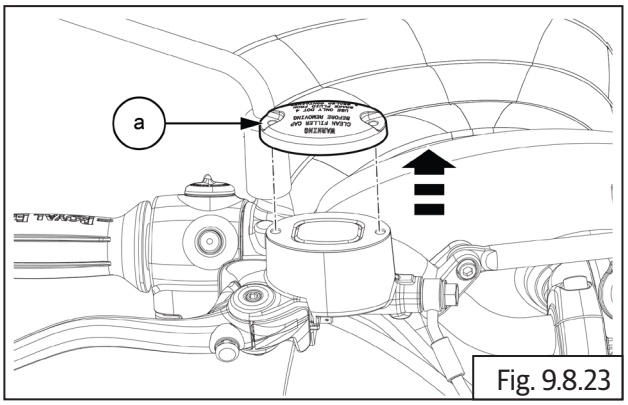

Fig. 9.8.23

- Remove reservoir diaphragm **(a)** from front brake reservoir tank.

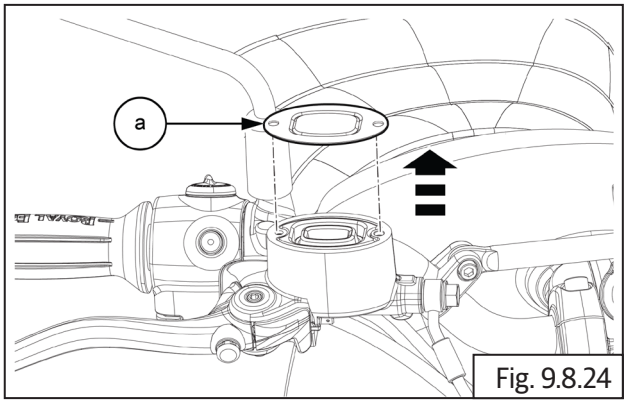

Fig. 9.8.24

- Remove reservoir diaphragm **(a)** from front brake reservoir tank.

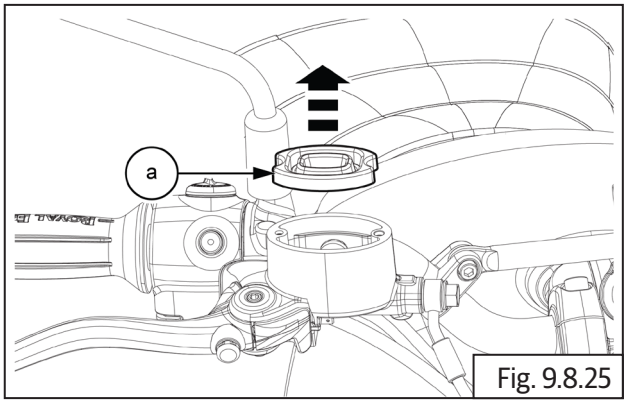

Fig. 9.8.25

- Top up fresh fluid **(a)** into reservoir tank up to 'MAX' mark on the window.
- Do not over fill as it may cause malfunctioning of some parts due to brake fluid spillage.

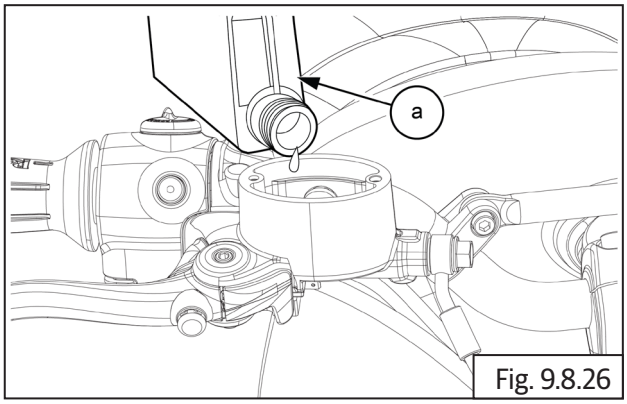

Fig. 9.8.26

9.7.4. Rear Brake Bleeding

⚠ CAUTION

Ensure the motorcycle is upright on a firm and flat surface.

Support motorcycle with suitable equipment below cradle frame.

- Rear brake reservoir is located near rear wheel on cradle frame.
- Open rear brake reservoir cap **(a)** from reservoir **(b)**.

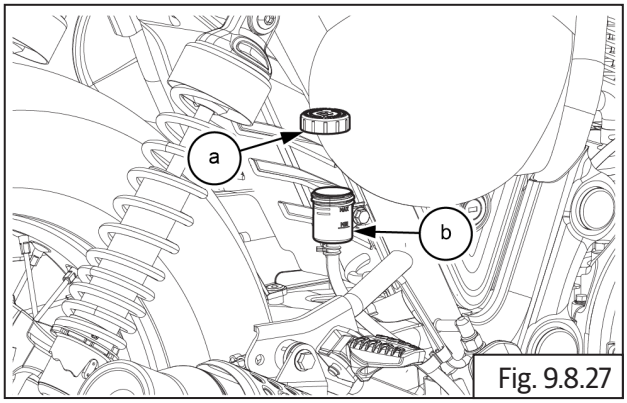

Fig. 9.8.27

NOTE

- *Use brake fluid from sealed containers only.*
- *Use only DOT4 specification brake fluid listed in technical specification Information.*

- Fill fresh brake fluid **(a)** into reservoir **(b)**.

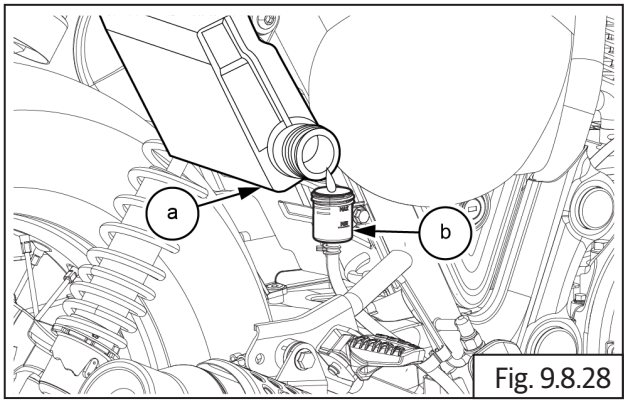

Fig. 9.8.28

- Do not over fill as it may cause malfunctioning of some parts due to brake fluid spillage.
- Locate the reservoir cap **(a)** on the tank and ensure it is seated properly.

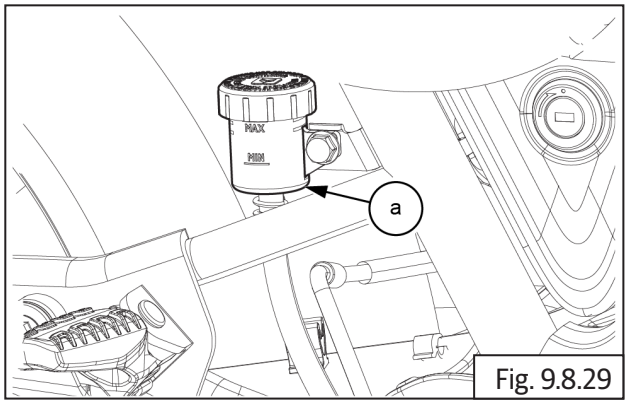

Fig. 9.8.29

- Locate rear brake bleeder valve on rear wheel brake caliper, behind silencer.
- Open rubber cap **(a)** from rear brake bleeder valve **(b)**.

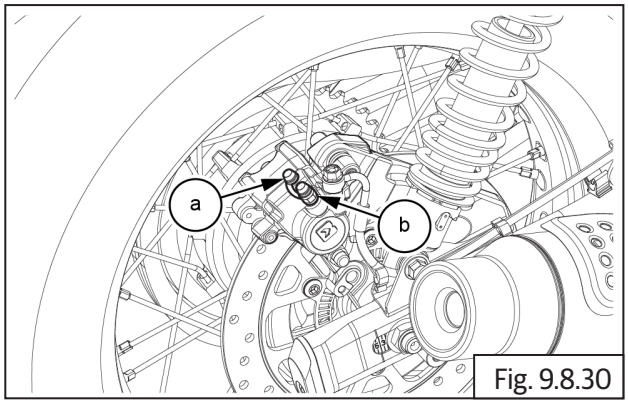

Fig. 9.8.30

- Dip bleeder hose **(a)** one end into a container **(b)** with fresh brake fluid to avoid air passage into bleeder valve.
- Insert bleeder hose other end into bleeder valve **(M6) (c)** on front caliper to drain used oil.

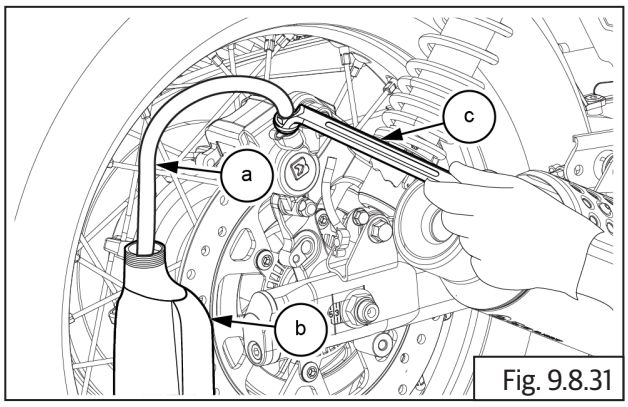

Fig. 9.8.31

	11 mm Ring spanner

- Gently pump rear brake pedal until pumping becomes hard and then hold it in place.

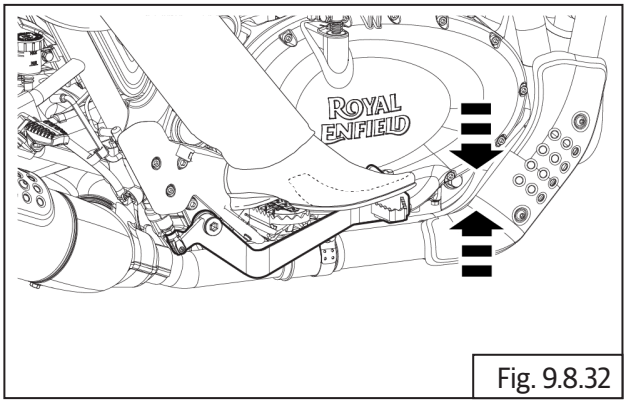

Fig. 9.8.32

- While holding brake, quickly open and close bleeder valve **(M6) (a)**.

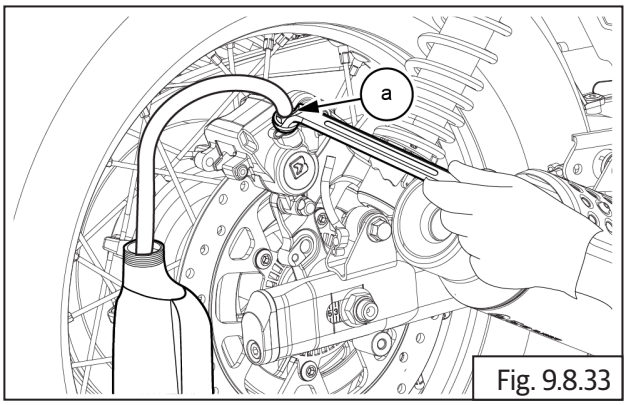

Fig. 9.8.33

	11 mm Ring spanner

- Repeat this operation until air from system is released completely.
- Inspect brake lever efficiency.

NOTE

- *The fluid level must be checked often during the bleeding operation and top up with fresh brake fluid as necessary.*
- *Gently tap brake hose for proper bleeding performance.*
- *Check brake fluid level after completion of brake bleeding.*

- Remove bleeder hose **(a)** from bleeder valve on rear caliper.

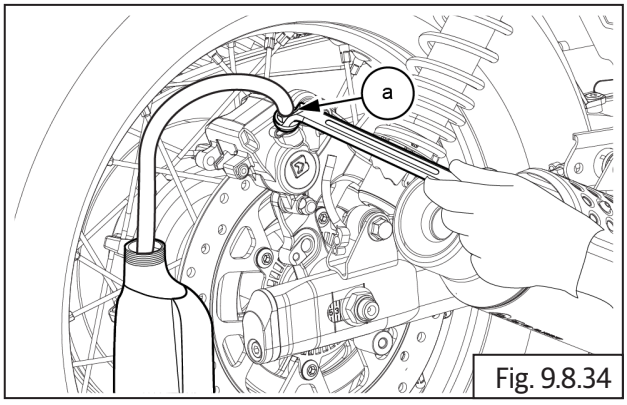

Fig. 9.8.34

	11 mm Ring spanner

- Close bleeder valve **(a)** rubber cap **(b)**.
- Ensure cap is locked properly to avoid exposure to dust or mud.

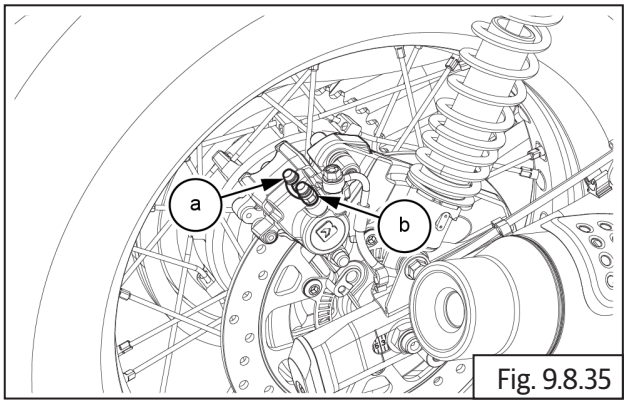

Fig. 9.8.35

9.7.5. Rear Brake Fluid Leakage

⚠ CAUTION

Ensure the motorcycle is upright on a firm and flat surface.

- Inspect fluid level visible on rear reservoir tank.
- Ensure brake fluid level in rear reservoir tank **(a)** is always between 'MIN' and 'Max' marks.

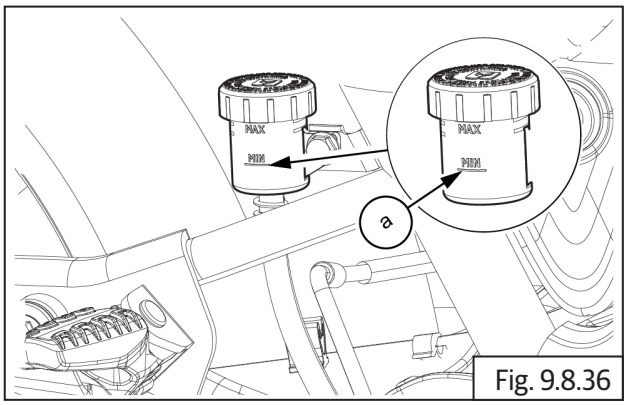

Fig. 9.8.36

- If oil level is below 'MIN', inspect leakage at rear brake hoses and rear master cylinder banjo bolt **(a).**

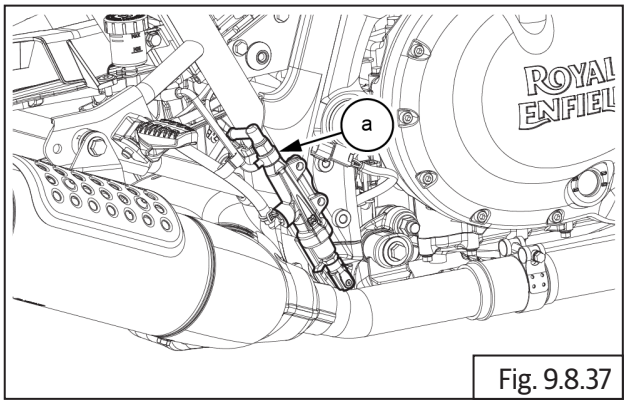

Fig. 9.8.37

- Inspect leakage at rear caliper banjo bolt.

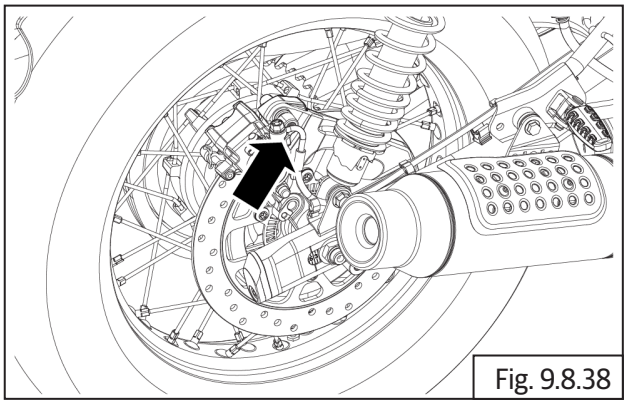
Fig. 9.8.38

- Inspect leakage on brake disc from caliper piston.

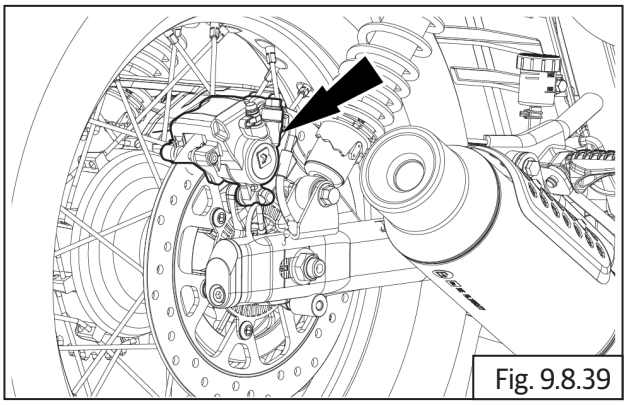

Fig. 9.8.39

- Inspect fluid leakage at hoses on ABS modulator.

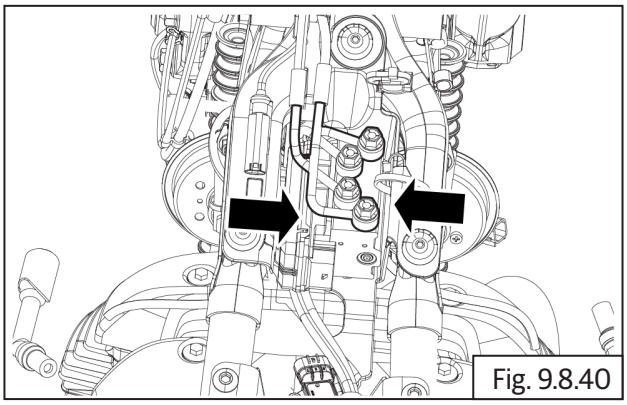

Fig. 9.8.40

9.7.6. Rear Brake Fluid Top Up

- Open rear brake reservoir cap **(a)** from reservoir **(b)**.

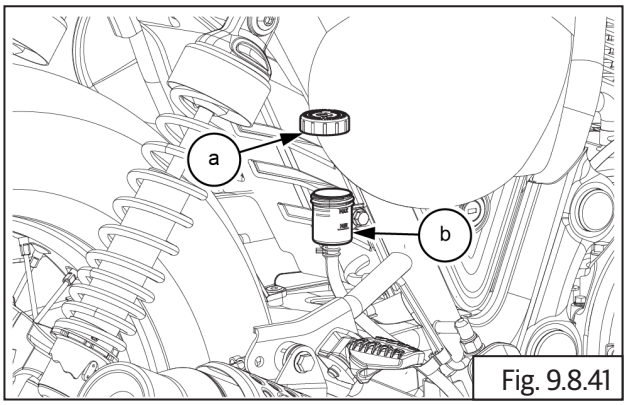

Fig. 9.8.41

- Top up fresh brake fluid **(a)** into reservoir tank **(b)** only up to MAX level. Do not over fill as it may cause malfunctioning of some parts due to brake fluid spillage.

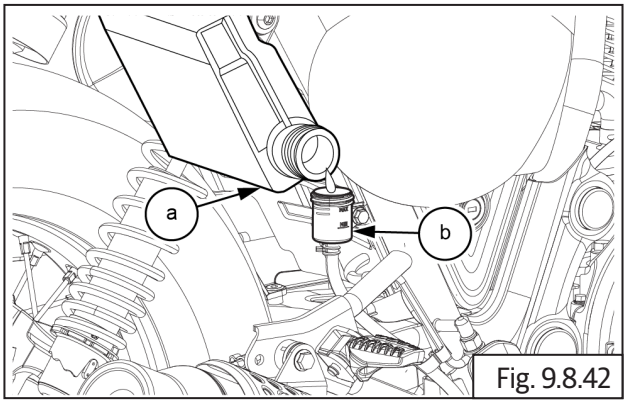

Fig. 9.8.42

- Locate the reservoir cap **(a)** on the tank and ensure it is seated properly.

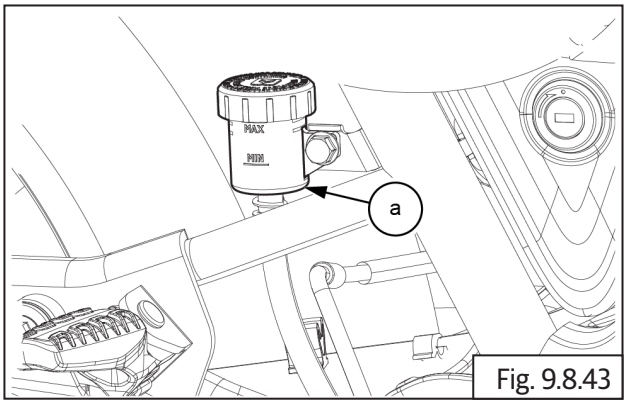

Fig. 9.8.43

ENGINE MANAGEMENT SYSTEM (EMS)

CONTENTS **PAGE**

10. Engine Management System (EMS) 612

System Layout 612

EMS Components 612

Functional Diagram 613

Functional Specifications 613

1. Electronic Control Unit (ECU) 613
2. Fuel Injectors 614
3. Fuel Supply Module 614
4. Throttle Position Sensor 614
5. Manifold Absolute Pressure Sensor (MAP) 615
6. Canister Purge Valve 615
7. HEGO Sensor (HEGO / O2) 616
8. Idle Air Control Valve (IAC) 616
9. Engine Oil Temperature Sensor (EOT) 617
10. Intake Air Temperature Sensor (IAT) 617
11. Clutch Switch 617
12. Side Stand Switch 618
13. Gear Position Sensor (GPS) 618
14. Roll Over Sensor 618
15. Crank Position Sensor (CPS) 619
16. Starter Motor Relay 619

10.1 Engine Management System (EMS) 620

Dismantling 620

10.1.1. Engine Control Unit (ECU) 620
10.1.2. Fuel Pump 621
10.1.3. Manifold Absolute Pressure Sensor (MAP) 622
10.1.4. Throttle Body Assembly 623
10.1.5. Throttle Position sensor (TPS) 623
10.1.6. Fuel Injectors 624
10.1.7. Idle Speed Control (ISC) 624
10.1.8. Engine Oil Temperature Sensor (EOT) 625
10.1.9. HEGO (O2) Sensor 626

CONTENTS **PAGE**

10.1.10. Intake Air Temperature (IAT) 627

10.1.11. Purge Valve 628

10.1.12. Roll Over Sensor 629

10.1.13. Ignition Coil 629

10.1.14 Crank Position Sensor 631

10.1.15. Gear Position Sensor 632

10.1.16. Clutch Switch 633

10.1.17. Side Stand Switch 634

10.1.18. Starter Motor Solenoid 635

Assembly 636

10.1.19. Engine Control Unit (ECU) 636

10.1.20. Fuel Pump 637

10.1.21. Fuel injectors 638

10.1.22. Manifold Absolute Pressure Sensor (MAP) 639

10.1.23. Idle Speed Controller (ISC - Stepper Motor) 640

10.1.24. Throttle Body 640

10.1.25. Throttle Position sensor (TPS) 641

10.1.26. Engine Oil Temperature Sensor (EOT) 642

10.1.27. HEGO (O2) Sensors 642

10.1.28. Intake Air Temperature sensor (IAT) 644

10.1.29. Purge Valve 645

10.1.30. Roll Over Sensor 645

10.1.31. Ignition Coil 646

10.1.32. Crank Position Sensor 648

10.1.33. Gear Position Sensor 649

10.1.34. Clutch Switch 650

10.1.35. Side Stand Switch 650

10.1.36. Starter Motor Solenoid 652

10.1.37. Actuator 654

10.2 EMS Adaptation procedure 658

10. Engine Management System (EMS)

Engine Management System is responsible for controlling the amount of fuel being injected and for adjusting the ignition timing. Optimum functioning of EMS assures maximum engine power with the lowest amount of exhaust emissions and lowest fuel consumption.

System Layout

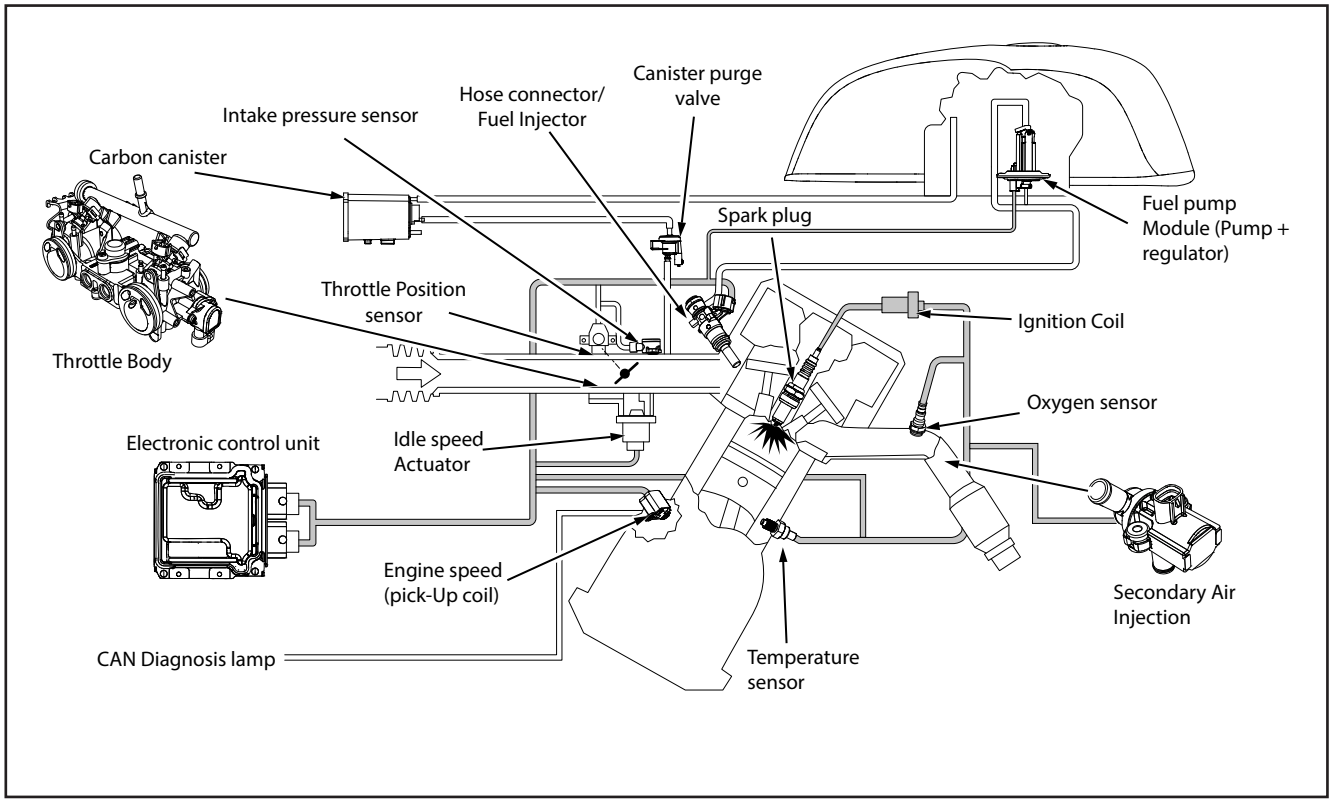

EMS Components

- Electronic Control Unit
- Fuel Injector
- Fuel Supply Module
- Throttle Position Senor
- Manifold Pressure Sensor
- Canister Purge Valve
- HEGO (O2) Sensor
- Idle Air Control Valve
- Engine Oil Temperature Sensor
- Intake Air Temperature Sensor
- Clutch Switch
- Side Stand Switch
- Gear Position Sensor
- Roll Over Sensor
- Crank Position Sensor
- Starter Motor Relay

Functional Diagram

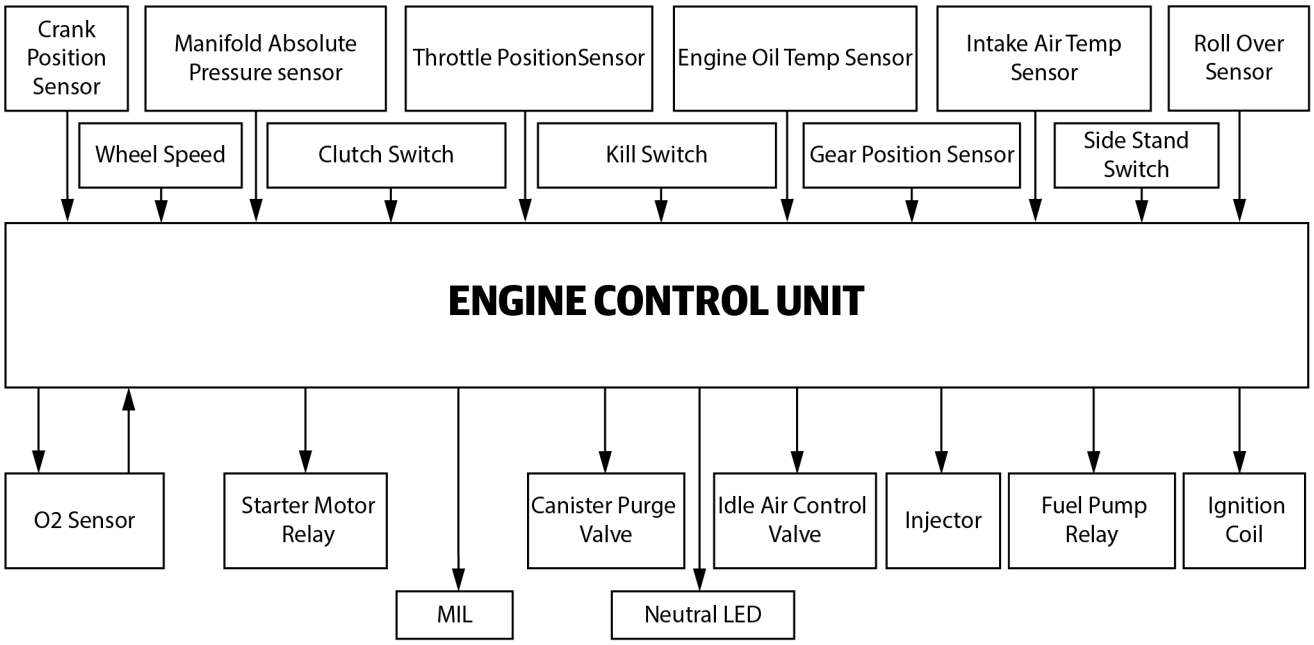

Functional Specifications

1. Electronic Control Unit (ECU)

Electronic Control Unit is any embedded system that controls one or more electrical system or subsystems in a vehicle. Engine Control Unit is a type of Electronic Control Unit that controls a series of actuators on an internal combustion engine to ensure optimal engine performance. It does this by reading values from a multitude of sensors within the engine bay, interpreting the data using multidimensional performance maps (called lookup tables), and adjusting the engine actuators accordingly.

Key Elements:

1.Micro Controller

2.Memory

3.Inputs

4.Outputs

5.Communication Links

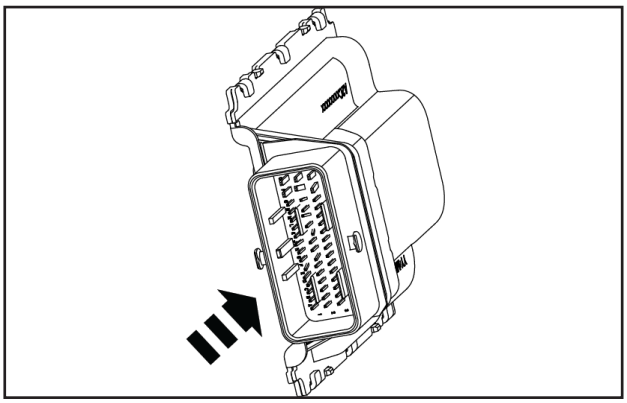

Specification:

Operating Voltage: 9 to 16 V

Operating temperature: -40ºC to 70ºC

2. Fuel Injectors

Fuel injectors that use pintle valves are operated by electromagnetic components called solenoids. The solenoid is activated, or "pulses" by an ECU which causes it to undergo linear movement.
Since the solenoid is mechanically connected to a pintle valve within the fuel injector, the linear movement causes the pintle to move away from its seat. A small amount of highly pressurized fuel then sprays from the pintle nozzle.

Specification:

Resistance: 12Ω ± 0.6Ω at 22 ± 3°C

Operating Voltage : 6 to 16 V

Operating Pressure: 350 ± 3.5 kPa

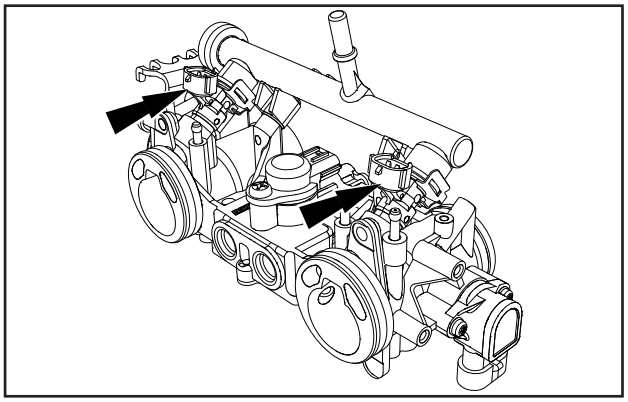

3. Fuel Supply Module

The inlet filter filters the minute dust particles and supplies fuel to the feed pump. The feed pump creates positive pressure in the fuel lines, pushing the gasoline to the injector. The benefit of placing the pump inside the tank is that it is less likely to start a fire. Though electrical components (such as a fuel pump) can spark and ignite fuel vapours, liquid fuel will not explode and therefore submerging the pump in the tank is one of the safest places to mount. The pressure regulator maintains a constant pressure of 350 kpa by returning the surplus fuel back into the tank.

Specification:

Operating Voltage: 8 to 16 V

Operating Fuel Pressure: 350 ± 2 kPa

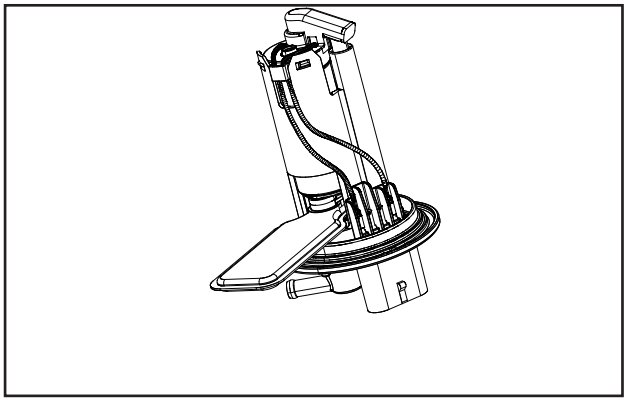

4. Throttle Position Sensor

A Throttle Position Sensor (Tps) is used to monitor the position of the throttle operation and is located on the butterfly spindle so that it can directly monitor the position of the throttle. The sensor is a potentiometer type and therefore provides a variable resistance depending upon the position of the butterfly valve and hence throttle position can be sensed by the ECU. The sensor signal is used by the ECU as an input to its control system. The ignition timing and fuel injection timing (and potentially other parameters) are altered depending upon the position of the throttle, and also depending on the rate of change of the position.

The ECU uses the throttle valve position to know:

- Engine mode: Idle, Part Throttle, Wide-Open Throttle.
- Air-fuel ratio correction.
- Acceleration/ Deceleration correction.

Specification:

Supply Voltage: 5 V

Total Resistance: 2000 ± 600 Ω (Across pins 126 & 207)

Voltage at idle: 0.7 ± 0.35 V

Voltage at WOT: 4.49 to 4.84 V

Note: To see signal, check Voltage across the pins 203 & 207

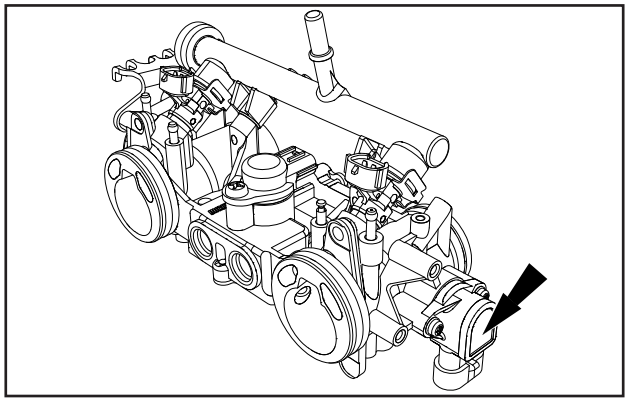

5. Manifold Absolute Pressure Sensor (MAP)

The Manifold Absolute Pressure sensor provides instantaneous manifold pressure information to the ECU. This is necessary to calculate air density to determine the required fuel metering for optimum combustion and influence the advance or retard of ignition timing. It is mounted under the fuel tank on frame.

Specification:

Supply Voltage: 5 V

Pressure Range: 10 to 115 kPa

Temperature Range: -40°C to 130°C

Note: To see signal, check Voltage across the pins 112 & 103

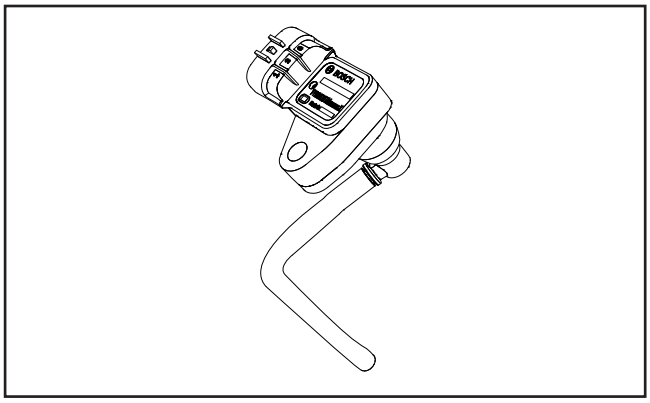

6. Canister Purge Valve

The purge valve is the part of the vehicle Evaporative Emission Control (EVAP) system. The EVAP system prevents fuel vapors in the fuel tank from escaping into the atmosphere. The EVAP system traps fuel vapors from the fuel tank and temporarily stores them in the charcoal canister, see the diagram. When the engine is running under certain conditions, the fuel vapors are purged from the canister and burned inside the engine. The purge valve precisely controls the amount of fuel vapor that is purged from the charcoal canister. It opens only when engine oil >75º c and HEGO sensor "Controller ON".

Specification:

Valve: Normally Closed

Resistance: 16 ± 2Ω @ 23 ± 5°C

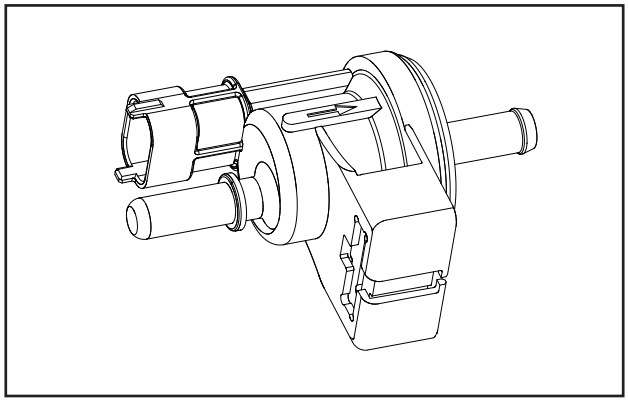

7. HEGO Sensor (HEGO / O2)

The Heated Exhaust Gas Oxygen sensor detects the presence of oxygen in the exhaust and produces a variable voltage according to the amount of oxygen detected. The O2 sensor provides feedback to the ECU indicating air/fuel ratio in order to achieve a near stoichiometric air/fuel ratio of 14.7 : 1 during closed loop engine operation. The ideal mixture is the amount of fuel needed to make an engine perform as commanded by the ECU.

The HEGO sensor is a voltage generator which is installed upstream from the catalytic converter. The heated exhaust gas oxygen sensor will generate a voltage signal that is characteristic of this ideal stoichiometric ratio. The HEGO sensor operates as a reference-gas sensor, and compares the residual oxygen in the exhaust gas with the oxygen in the reference atmosphere (air circulating inside the sensor). The active sensor ceramic is heated by the internal heating element; thus sensor heating reduces the influence of the exhaust gas temperature on the sensor-ceramic temperature and therefore the temperature-dependent sensor. Reliable signals working temperature from 300ºc to 900ºc maximum.

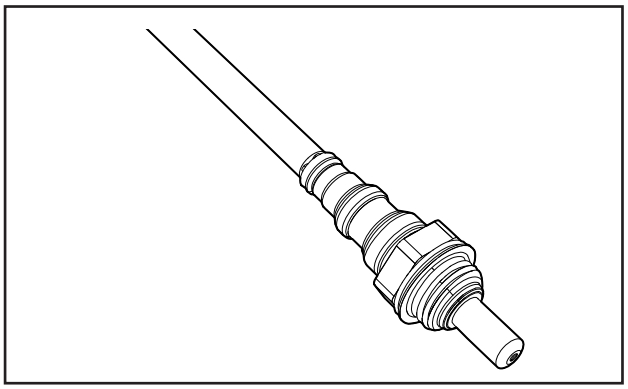

Specification:

Operating Voltage: 16 V (Max)

Operating temperature: 600ºC to 950ºC

8. Idle Air Control Valve (IAC)

Idle Air Control Valve is basically a stepper motor controlling the bypass air to the engine and helps to idle and cold start the engine without difficulties. The ECU accordingly collects the data from the engine oil temperature and intake air temperature sensors and operates the stepper motor in regulating the engine RPM. This allows the engine's idle speed to be maintained constant. It is mounted on throttle body.

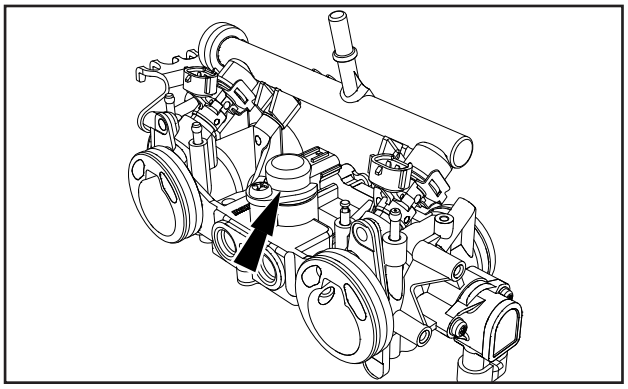

Specification:

Operating Voltage: 8 to 16 V

Working temperature - 10ºC

High altitude range - upto 5000 meter

NOTE: 1. To meet target emission

2. To meet evaporative emission.

9. Engine Oil Temperature Sensor (EOT)

Engine oil temperature sensor is thermistor whose resistance is dependent on temperature. It has a Negative Temperature Coefficient where the resistance decreases with increase in temperature. It gives the average temperature of the engine oil to the ECU for making corrections in the injection quantity, ignition timing and for adjusting the stepper opening for better idle stability. It is mounted in LH of cylinder head.

Specification:

Operating Temperature: -55 to 250°C

Supply Voltage: 5 V

Pin Out Voltage: 2.7734 V @ 39.6°C
(Across Pins 215 & 106)

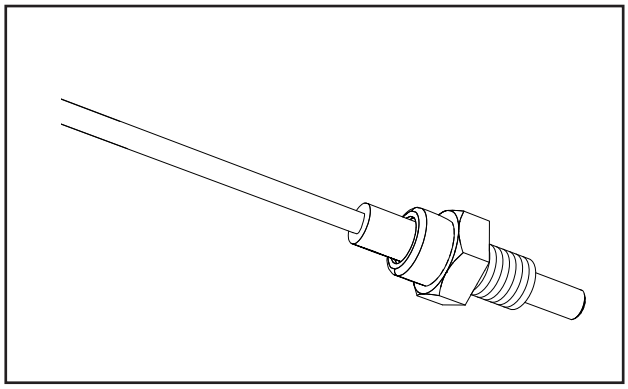

10. Intake Air Temperature Sensor (IAT)

Intake air temperature sensor is also a Negative Temperature Coefficient sensor where the resistance decreases with increase in temperature. It gives the information about ambient air temperature to the ECU for making corrections in the injection quantity and ignition timing. It is mounted on airfilter box top right corner.

Specification:

Operating Temperature: -55 to 125°C

Supply Voltage: 5 V

Pin Out Voltage:1.777 V @ 39.8°C
(Across Pins 227 & 105)

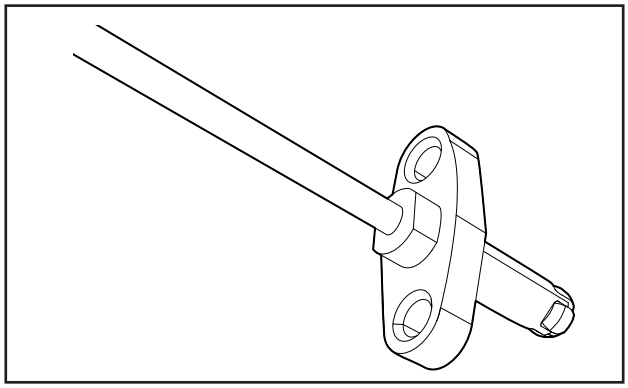

11. Clutch Switch

Clutch switch gives information to the ECU about the clutch status (i.e) engaged or disengaged with the gearbox. The clutch switch gives digital input to the ECU (i.e) 0 or 1 which will help in starting of the vehicle when the engine is not in neutral gear. It is mounted under the LH switch module at handle bar.

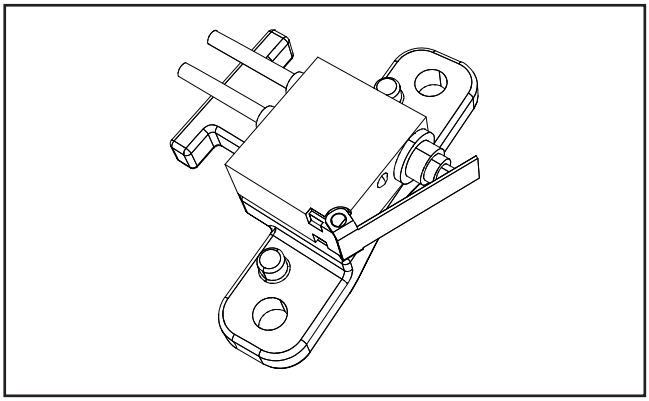

12. Side Stand Switch

Side stand switch prevents the vehicle from starting when the side stand is down and not in neutral gear.
It is HALL - IC type switch, which is directly connected to ECU.

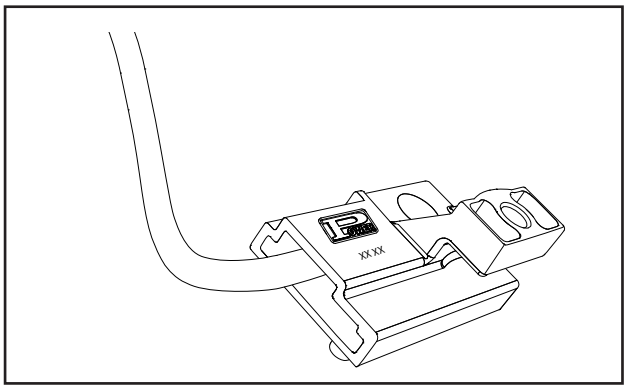

Specification:

(Across Pins 226 & 208)

Side stand down: 2.80 to 4.05 V

Side stand up: 0.35 to 1.15 V

13. Gear Position Sensor (GPS)

Gear Position Sensor indicates the ECU, the gear in which the vehicle is operated at that instant. The input is also required for drive ability calculations in the ECU.
During neutral gear position a light will glow in instrument cluster.
Operating temperature: -25°c to +150°c

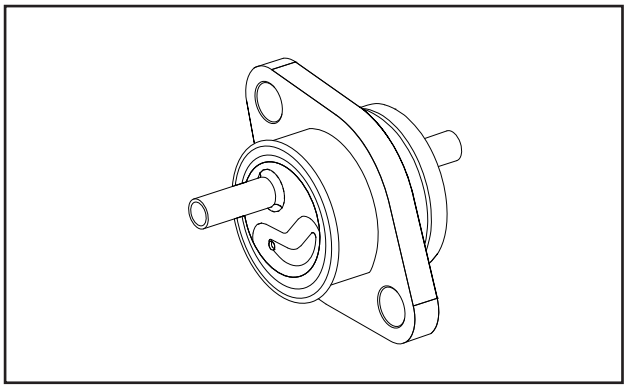

Specification:

(Across Pins 123 & 208)

Neutral gear: 0.37 to 1.16 V

14. Roll Over Sensor

Roll over sensor is also known as bank angle sensor. This sensor gives signal to the ECU if the vehicle rolls off during any mishap or accident. The ECU then cuts off the supply to the fuel injector and the spark plug thus stalling the vehicle, due to which further major mishap is avoided. It is mounted under the seat on the vehicle above battery box.

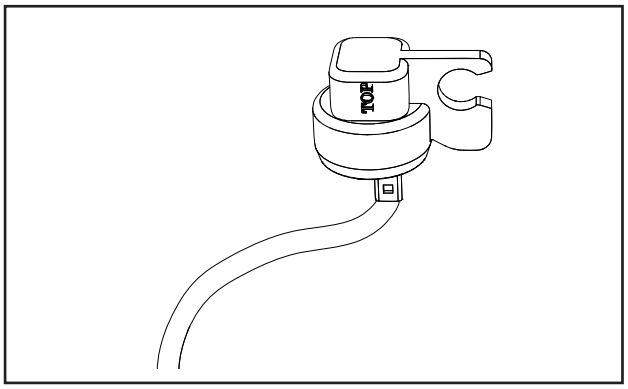

Specification:

(Across Pins 225 & 114)

Voltage when vehicle is upright: 0.36 to 1.5 V

Voltage during a fall: 3.75 to 4.35 V

Banking angle: 45 degrees

15. Crank Position Sensor (CPS)

It provides an alternating electrical pulse to the ECU, to determine crankshaft speed and TDC position of the piston in compression stroke. This input will help the ECU to optimize both fuel injection as well as Ignition advance required to suit the crankshaft rotation speed (RPM).
In the event throttle is wide open, leading to crankshaft speed above 5500 RPM, the high frequency electrical pulses from the crank position sensor will prompt the ECU to restrict fuel supply so that the crank speed reduces to safe levels. This is a safety aspect to prevent damage to moving engine parts. CPS is located inside the engine cover LH, under the stator coil.

Specification:

Output Voltage: 3 - 5 V AC

Resistance : 215Ω ± 10Ω

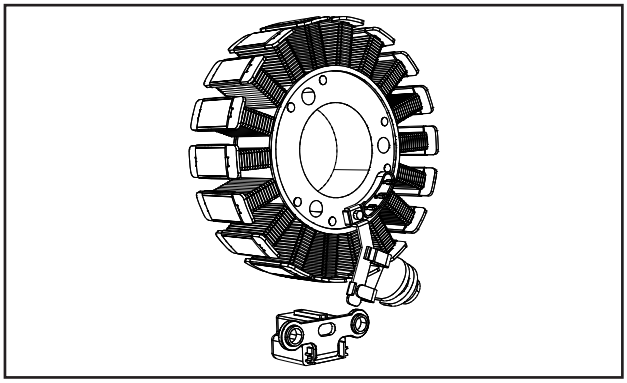

16. Starter Motor Relay

The starter motor is activated by a solenoid, whenever the starter button is depressed to start the engine.

While cranking, when the crank speed attains 600 RPM the ECU commands the starter solenoid to disconnect the power supply to the starter motor so that is will stop spinning.

Also in case the engine does not start within 15 seconds of depressing the starter button, the solenoid will disconnect power supply to the starter motor and will reset to normal condition only after the starter switch is released and after a time delay of about 5 seconds and Crank is at Zero RPM

This is a safety feature to safeguard the starter motor, solenoid and the starter clutch.

Specification:

Operating Voltage: 8 to 16 V

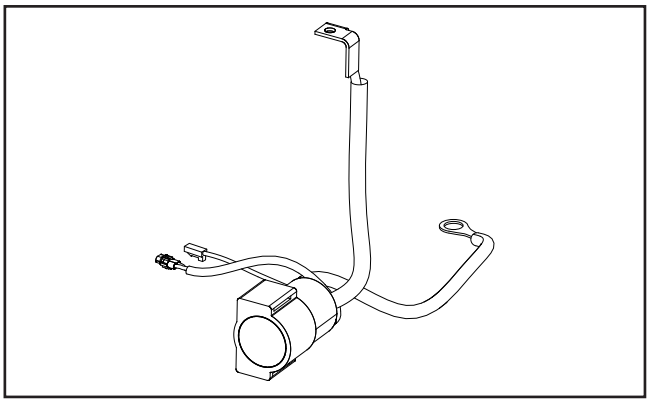

10.1 Engine Management System (EMS)

Dismantling

10.1.1. Engine Control Unit (ECU)

⚠ CAUTION

Before disconnecting ECU from the wiring harness, the battery terminals must be disconnected from the battery.

- Ensure the ignition switch and stop switch are in OFF position.
- Remove the following:
  - Side panel RH.
  - Side panel LH.
  - Seat from frame.
- Disconnect battery terminals.
- ECU is main part of EMS and is located below seat assembly.
- Loosen and remove 2 Nos hex head collar bolt **(M6) (a)** holding ECU to infill cover.

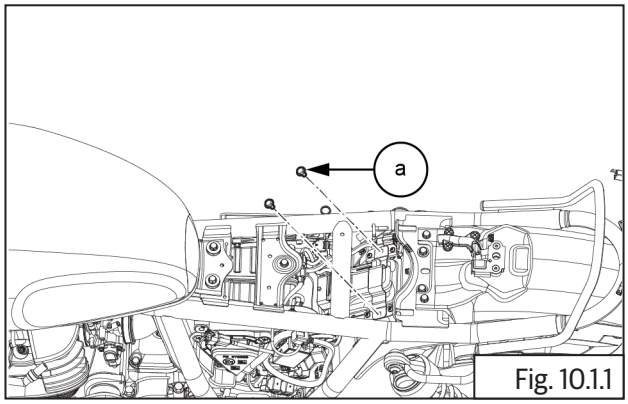

Fig. 10.1.1

	10 mm Socket with Ratchet

- Remove the bracket **(a)** from ECU.

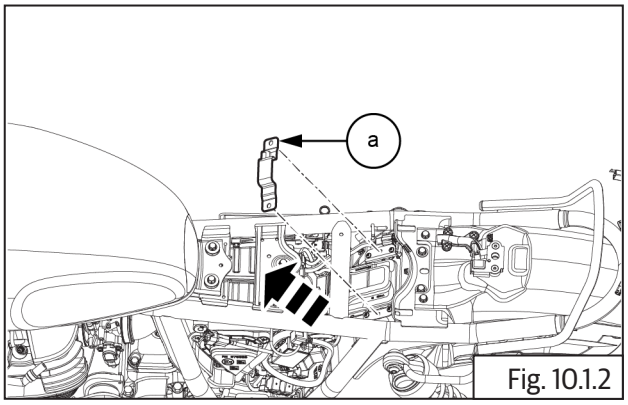

Fig. 10.1.2

⚠ CAUTION

DO NOT lift ECU too much as it will cause damage to the wiring connectors and wiring harness.

- Disconnect ECU connector **(a)**.

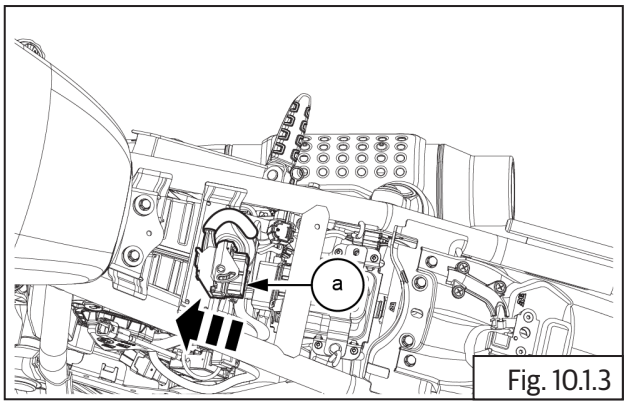

Fig. 10.1.3

- Remove the ECU **(a)** from chassis frame.

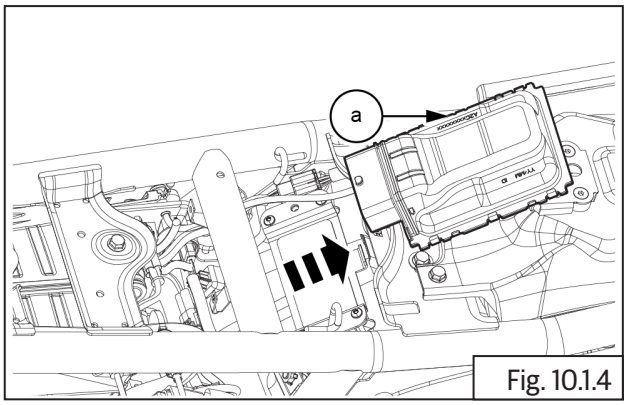

Fig. 10.1.4

⚠ CAUTION

Ensure locks are fully lifted up and released before disconnecting wiring connectors from ECU.

Ensure locks are handled with care and do not get damaged or broken.

Damaged or broken locks will result in loose connections and cause the ECU to fail.

Storage of ECU

Do's & Don'ts

- Store ECU away from any magnetic forces at it will affect the ECU program software and damage ECU.
- Store ECU in a cool and dry place.
- DO NOT allow moisture to affect the ECU.
- DO NOT wash the ECU with water or any solvent.
- Prevent ECU from any external damages.
- DO NOT drop ECU or allow it to fall as internals will get damaged and render the ECU defective.
- DO NOT keep any heavy or sharp objects on ECU as it will damage internals and render the ECU defective.

10.1.2. Fuel Pump

- Ensure Ignition switch and Engine stop switch are in OFF position
- Remove the following parts:
  - Side panel RH. (Refer----------).
  - Rider seat.(Refer----------).
  - Fuel tank assembly.(Refer----------).

⚠ CAUTION

Ensure the following:

Fuel is drained completely from fuel tank.

Fuel feed and return hoses are disconnected from the fuel rail.

Wiring couplers to fuel pump and low fuel sensor are disconnected.

EVAP hose pipes are disconnected.

⚠ WARNING

Gasoline is extremely flammable and highly explosive. Improper handling can lead to fatal accident or serious injury.

- Loosen and remove **6Nos** Hex socket head cap screws **(M5) (a)** holding fuel pump **(b)** to tank.

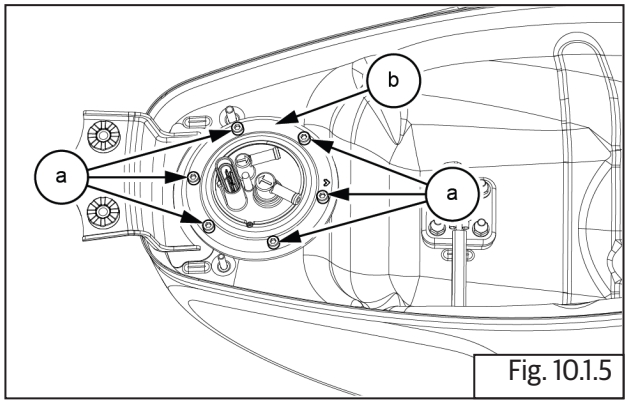

Fig. 10.1.5

	4 mm Socket with Ratchet

- Gently pull out the fuel pump **(a)** from fuel tank **(b)**.

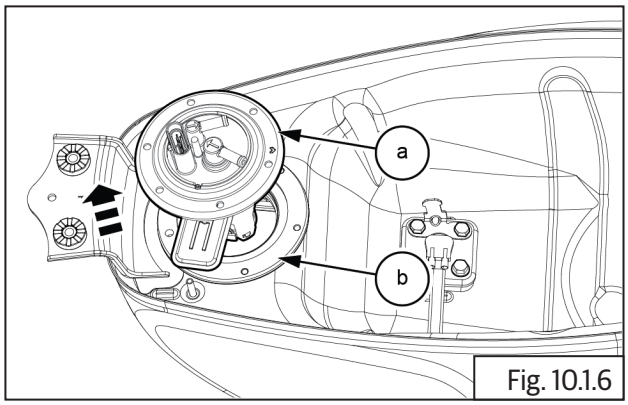

Fig. 10.1.6

10.1.3. Manifold Absolute Pressure Sensor (MAP)

- Ensure ignition switch and engine stop switch are in OFF position
- Remove the following parts:
  - Side panel RH.(Refer----------).
  - Rider seat.(Refer----------).
  - Fuel tank assembly.(Refer----------).

⚠ CAUTION

Ensure the following:

Fuel is drained completely from fuel tank.

Fuel feed and return hoses are disconnected from the fuel rail.

Wiring couplers to fuel pump and low fuel sensor are disconnected.

EVAP hose pipes are disconnected.

⚠ WARNING

Gasoline is extremely flammable and highly explosive. Improper handling can lead to fatal accident or serious injury.

- Remove throttle body cover from the LH side.
- Disconnect MAP sensor vacuum hose **(a)** from throttle body.

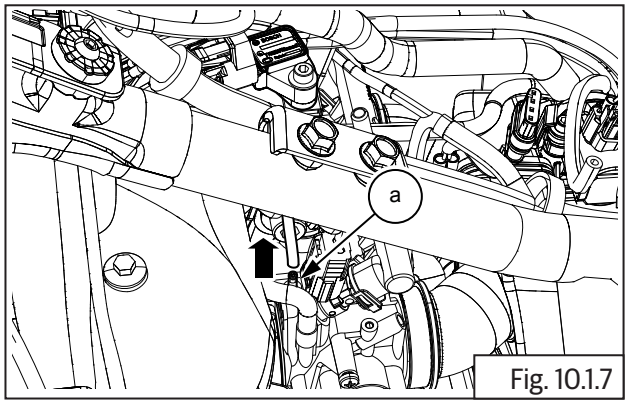

Fig. 10.1.7

- The MAP sensor is fixed to the ABS modulator bracket.
- Loosen and remove Hex socket head bolt **(M5) (a)** along with washer, holding MAP sensor **(b)** to bracket.

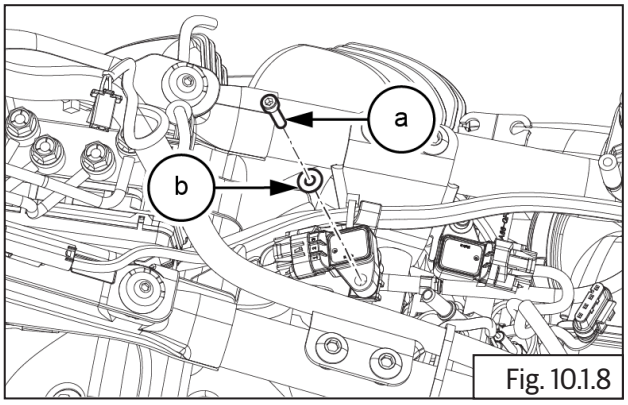

Fig. 10.1.8

	4 mm Allen key with Ratchet

- Gently lift up MAP sensor to access wiring coupler.
- Push lock and release wiring harness connector **(a)** from MAP sensor connector and disconnect the same.

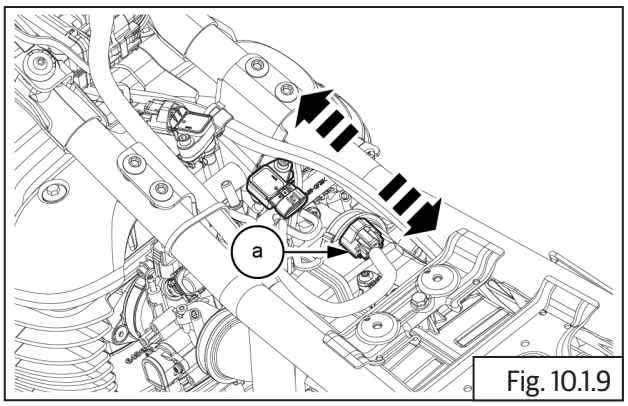

Fig. 10.1.9

⚠ CAUTION

DO NOT lift the MAP sensor too much to avoid damage to the wiring connectors .

10.1.4. Throttle Body Assembly

- Ensure ignition switch and engine stop switch are in OFF position
- Remove the following parts:
  - Side panel RH.(Refer----------)
  - Rider seat.(Refer----------)
  - Side panel LH.(Refer----------)
  - Fuel tank assembly.(Refer----------)

⚠ CAUTION

Ensure the following:

Fuel is drained completely from fuel tank.

Fuel feed and return hoses are disconnected from the fuel rail.

Wiring couplers to fuel pump and low fuel sensor are disconnected.

EVAP hose pipes are disconnected.

⚠ WARNING

Gasoline is extremely flammable and highly explosive. Improper handling can lead to fatal accident or serious injury.

- Remove the following parts:
  - Throttle body cover LH and RH.
  - Throttle cable.
  - Remove electrical connectors from TPS, idle speed control stepper motor and fuel injectors LH and RH.
  - Rubber hoses connecting to Throttle body from EVAP.
- Ensure vacuum hose and MAP sensor are removed from throttle body.
- Loosen wire clips on LH and RH air filter connection tubes.
- Loosen worm clip screw on inlet manifold on Cylinder (LH) .
- Loosen worm clip screw on inlet manifold on Cylinder (RH) .

NOTE

- *Ensure both screws are sufficiently loosened and the worm clips rotates easily in the groove in the manifolds.*

- Gently pull out throttle body from the inlet manifold rubbers along with fuel rail and injectors.

10.1.5. Throttle Position sensor (TPS)

- The TPS is located on left side of throttle body and should **NOT BE REMOVED** from the throttle body under any circumstances.
- In case of any defect in the TPS **(a)**, complete throttle body assembly should be replaced.

⚠ CAUTION

Do not disturb the TPS sensor (a) fixing screws or the throttle rotor setting screw as it will affect the EMS settings and the engine performance.

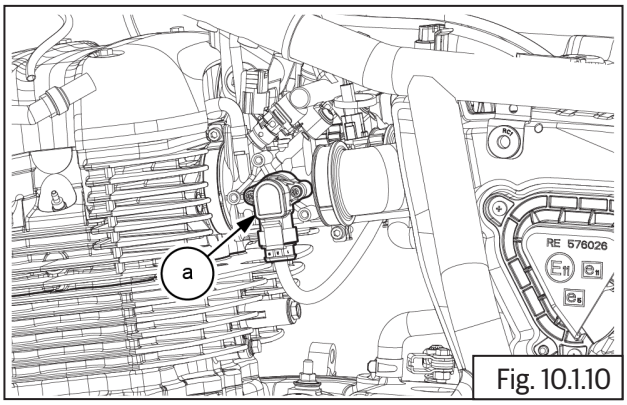

Fig. 10.1.10

10.1.6. Fuel Injectors

- Remove throttle body. (Refer----------).
- Loosen and remove 2 Nos. button head screws **(a)** holding from fuel injector rail **(b)** to throttle body.

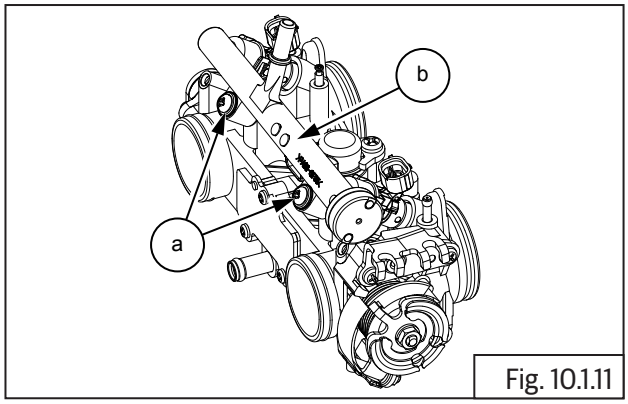

Fig. 10.1.11

	Screw driver (+)

- Gently remove fuel rail **(a)** along with injectors **(b)** from throttle body.

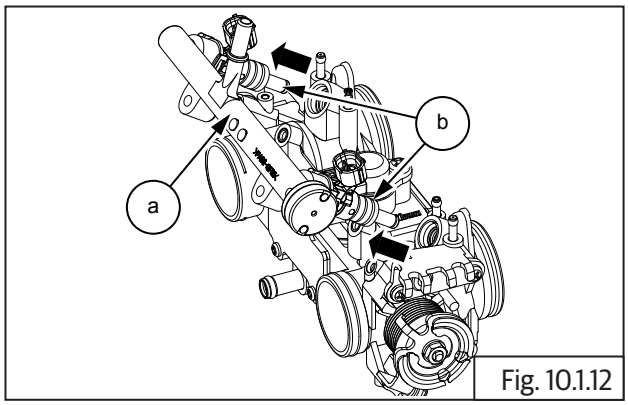

Fig. 10.1.12

- Gently release and remove lock clips **(a)** that secure injectors **(b)** to injector rail **(c)**.

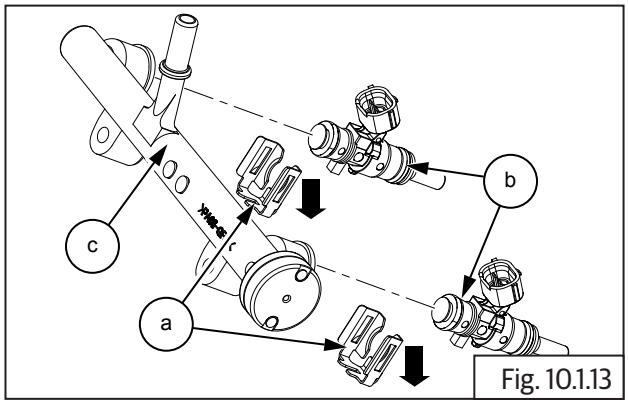

Fig. 10.1.13

- Gently remove injectors from fuel rail along with O-rings upper **(a)** and lower **(b)**.

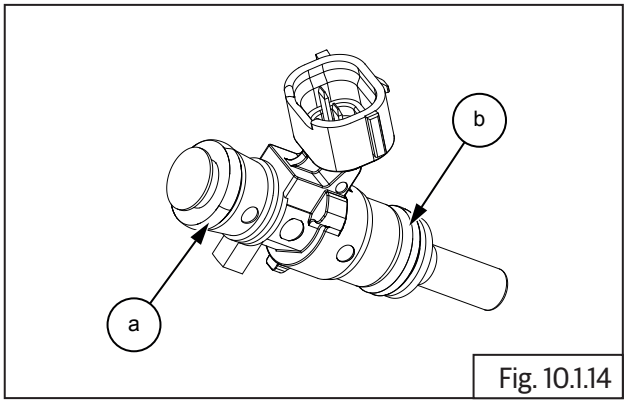

Fig. 10.1.14

10.1.7. Idle Speed Control (ISC)

- Remove throttle body.
- The ISC motor is located on top of throttle body.
- Loosen and remove button head screw **(a)** from ISC stepper motor fixing clamp **(b)**.

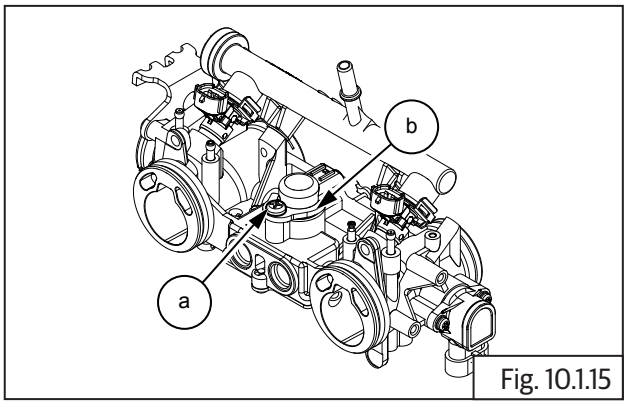

Fig. 10.1.15

	Phillips screw driver (+)

⚠ CAUTION

The spring is loaded hence remove screw with care.

- Gently pull out and remove ISC stepper motor **(a)** along with O-ring **(b)** and spring **(c)** from throttle body **(d)**.

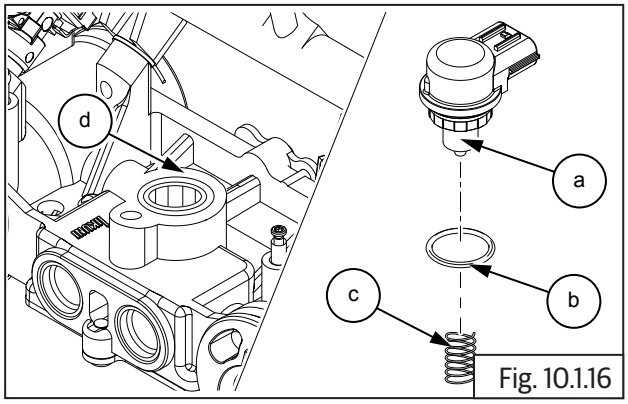

Fig. 10.1.16

10.1.8. Engine Oil Temperature Sensor (EOT)

- Remove throttle body.
- The EOT **(a)** is located on the LH side cylinder head below the throttle body.

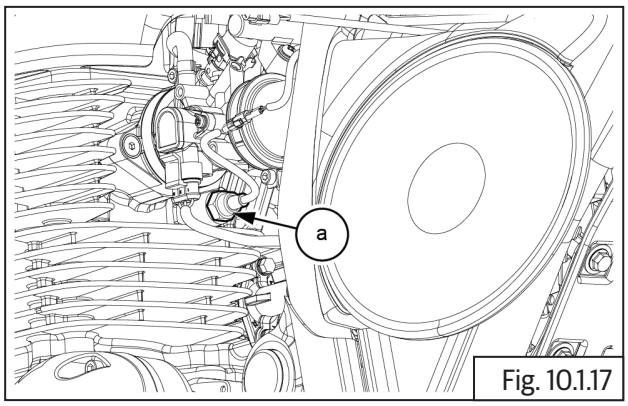

Fig. 10.1.17

NOTE
• *Ensure the engine is cold before dismantling EOT.* • *Ensure Ignition switch and Engine stop switch are in OFF position.*

⚠ **CAUTION**
Do not remove EOT from cylinder head when the engine is hot.

- Remove throttle body cover LH.
- Disconnect EOT sensor wiring coupler from the main harness above throttle body.

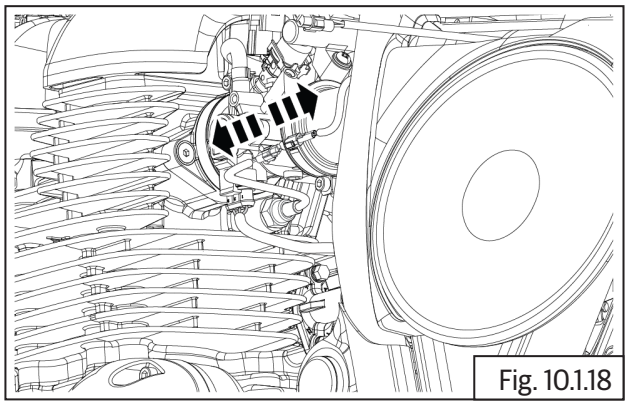
Fig. 10.1.18

- Place a small tray under EOT to collect the oil when it is loosened and removed.
- Insert EOT wiring coupler through a deep grooved ring spanner and locate the spanner on the EOT hex head correctly.
- Gently loosen EOT **(a)** from cylinder head **(b)** and remove along with O-ring **(c)**.

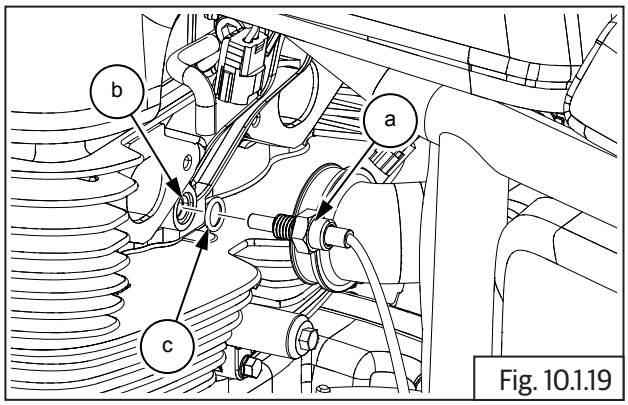

Fig. 10.1.19

	17 mm Deep groove ring spanner

10.1.9. HEGO (O2) Sensor

⚠ CAUTION

Do not loosen/remove HEGO (O2) sensors when the exhaust pipes are hot.

⚠ WARNING

The engine and exhaust systems get extremely hot during normal operation and can result in serious burns if touched. Make sure exhaust pipes are not hot and is at the same levels of ambient/surrounding temperature whenever working on the engine or exhaust systems.

- Detach the omega clips **2Nos (a)** from LHS and RHS Oxygen Sensor wiring harness.

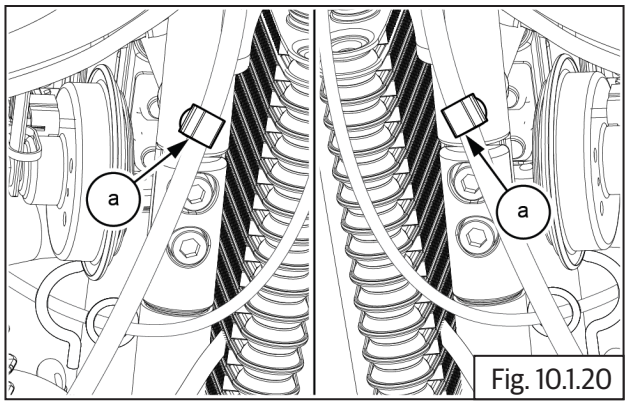

Fig. 10.1.20

- Disconnect Oxygen Sensor sensor connectors **(a)** from both LHS and RHS on the front side of engine.

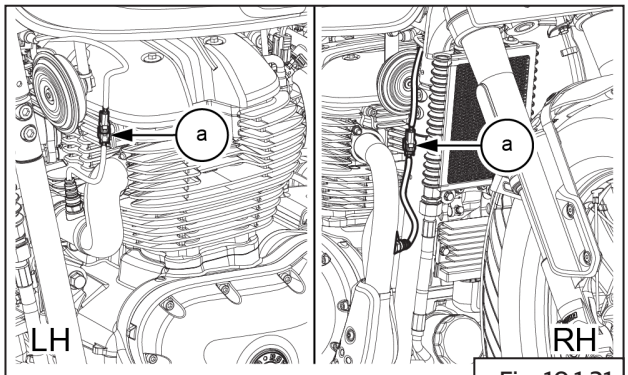

Fig. 10.1.21

- Disconnect the CAT box Oxygen Sensor coupler **(a)**.

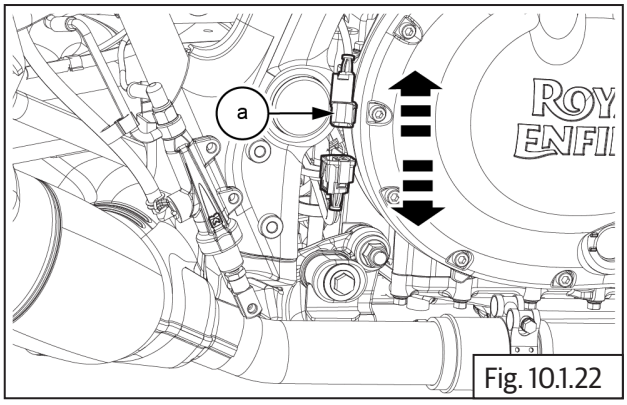

Fig. 10.1.22

- Gently loosen and remove the Oxygen sensor **(a)** from the exhaust pipe.

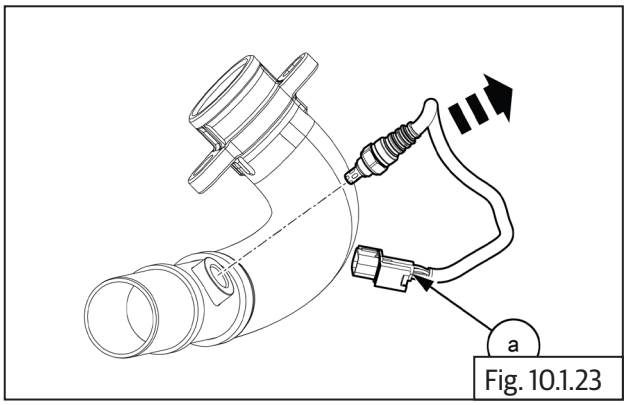

Fig. 10.1.23

	17 mm Combination spanner/Deep groove Socket with Ratchet

- Gently loosen and remove the Oxygen sensor **(a)** from the exhaust pipe.

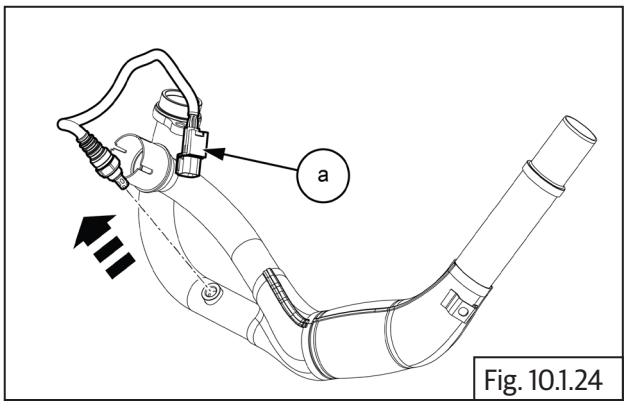

Fig. 10.1.24

	17 mm Combination spanner/Deep groove Socket with Ratchet

- Gently loosen and remove the Oxygen sensor **(a)** from the CAT box.

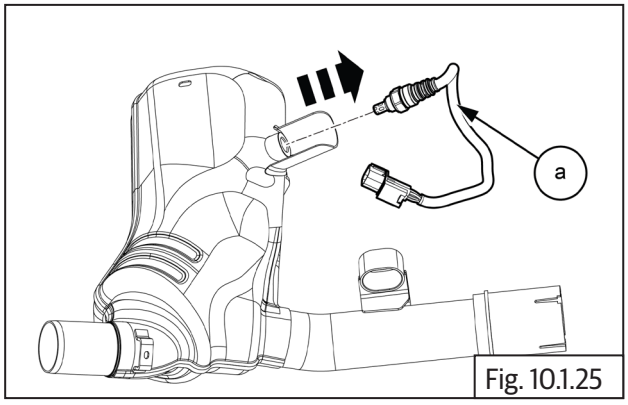

Fig. 10.1.25

	17 mm Combination spanner/Deep groove Socket with Ratchet

10.1.10. Intake Air Temperature (IAT)

- The IAT **(a)** assembled in the front RH side of the air filter housing.

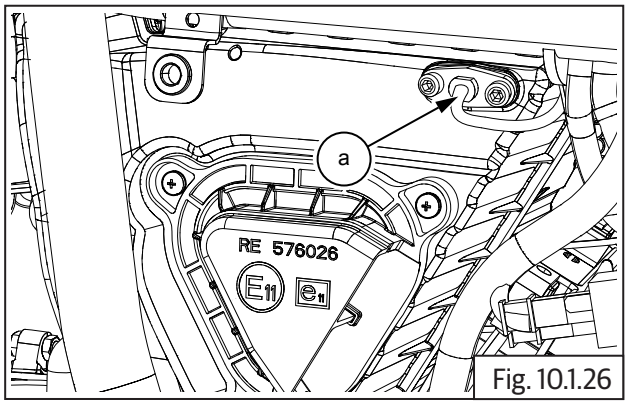

Fig. 10.1.26

- Ensure ignition switch and engine stop switch are in "OFF" position.
- Remove the following parts:
  - Side panel RH.(Refer----------).
  - Rider seat.(Refer----------).
  - Side panel LH.(Refer----------).

⚠ CAUTION

Ensure the following:

Fuel is drained completely from fuel tank.

Fuel feed and return hoses are disconnected from the fuel rail.

Wiring couplers to fuel pump and low fuel sensor are disconnected.

⚠ WARNING

Gasoline is extremely flammable and highly explosive. Improper handling can lead to fatal accident or serious injury.

- Disconnect IAT sensor connector **(a)** from wiring harness located above air filter housing .

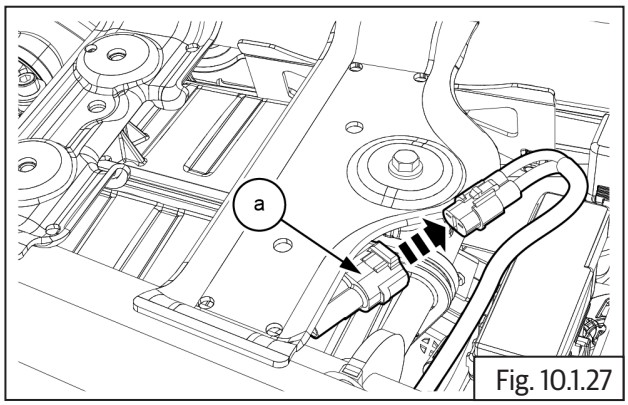

Fig. 10.1.27

- Loosen and remove 2 Nos. Hex socket head cap screws **(M5) (a)** holding IAT sensor to air filter housing.

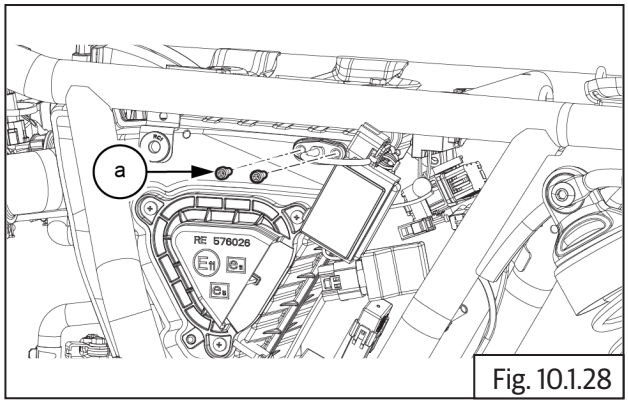

Fig. 10.1.28

	4 mm Allen socket with Ratchet

- Gently pull out IAT sensor **(a)** from air filter housing and remove sensor.

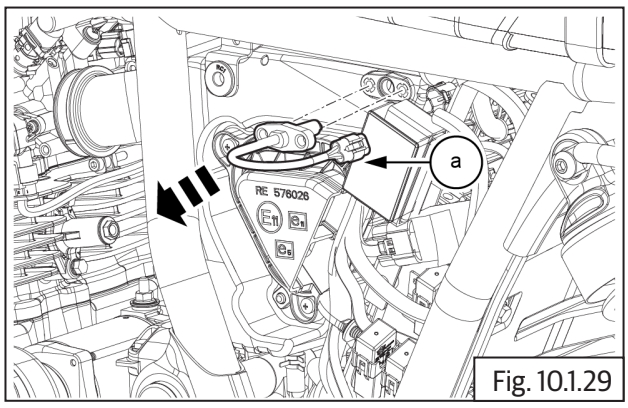

Fig. 10.1.29

10.1.11. Purge Valve

- Remove the following parts:
  - Side panel RH.(Refer----------).
  - Rider seat.(Refer----------).
  - Side panel LH.(Refer----------).
  - Engine control unit (ECU).(Refer----------).
  - Rear mudguard.(Refer----------).
  - Infill mudguard.(Refer----------).
  - Disconnect the roll over sensor connector.
- Disconnect electrical connector **(a)** from purge valve .

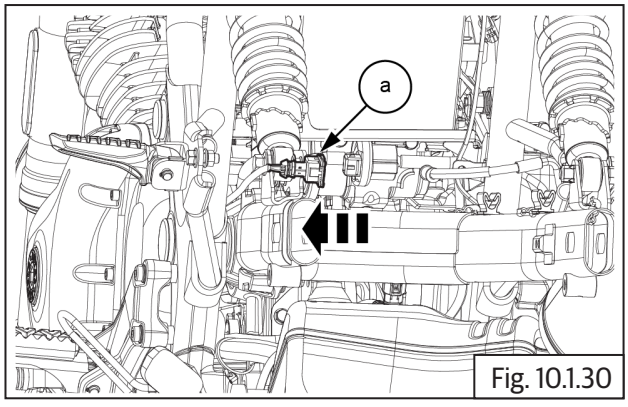

Fig. 10.1.30

- Disconnect the purge valve inlet **(b)** and outlet **(a)** hoses from purge valve.

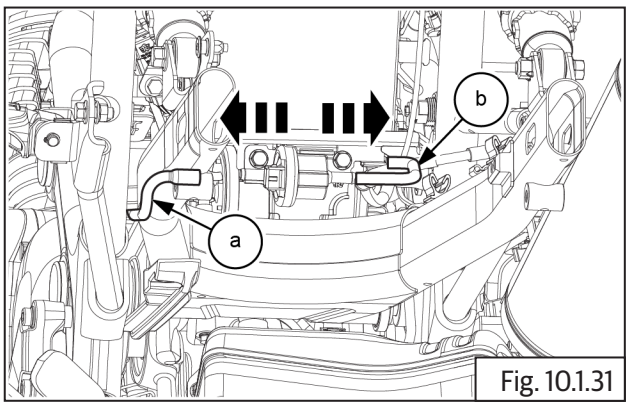

Fig. 10.1.31

- Slide and remove the purge valve with rubber boot **(a)** from bracket.

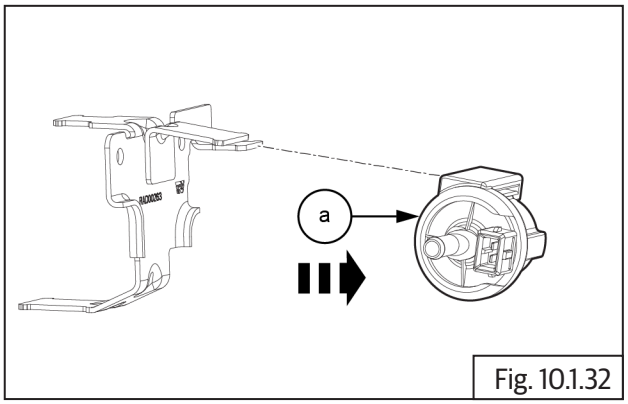

Fig. 10.1.32

- Remove the purge valve from rubber boot.

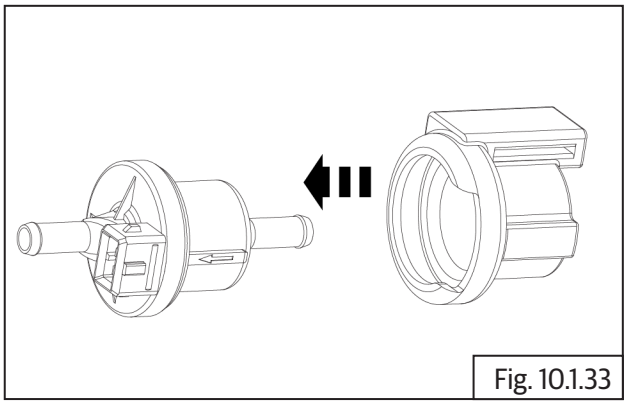
Fig. 10.1.33

10.1.12. Roll Over Sensor

- Ensure ignition switch and engine stop switch are in "OFF" position.
- Remove the following parts:
  - Side panel RH.(Refer----------).
- Rider seat.(Refer----------).
- Disconnect roll over sensor wiring coupler **(a)** from main harness.

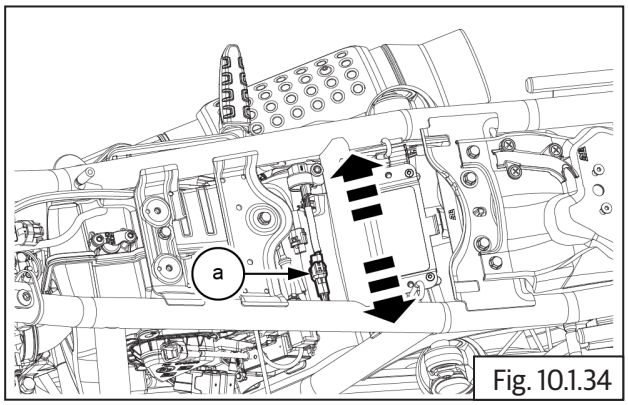

Fig. 10.1.34

- Loosen and remove cap screw **(M5) (a)** and washer **(b)** holding roll over sensor to frame.

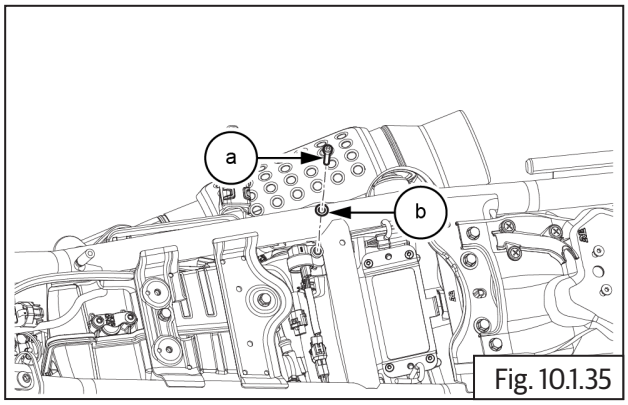

Fig. 10.1.35

	4 mm Socket with Ratchet

- Remove the roll over sensor **(a)** from chassis frame.

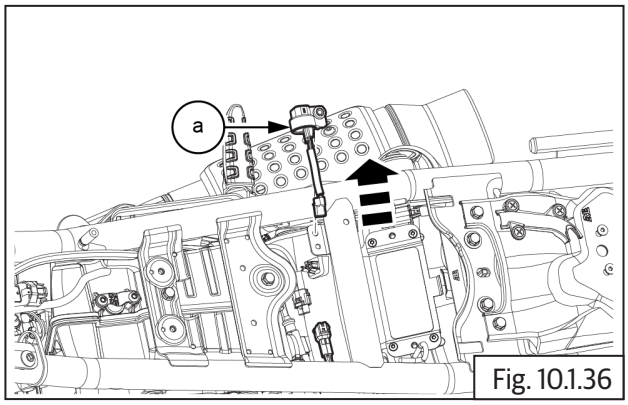

Fig. 10.1.36

10.1.13. Ignition Coil

- The Ignition coil **(a)** is located on the frame under fuel tank.

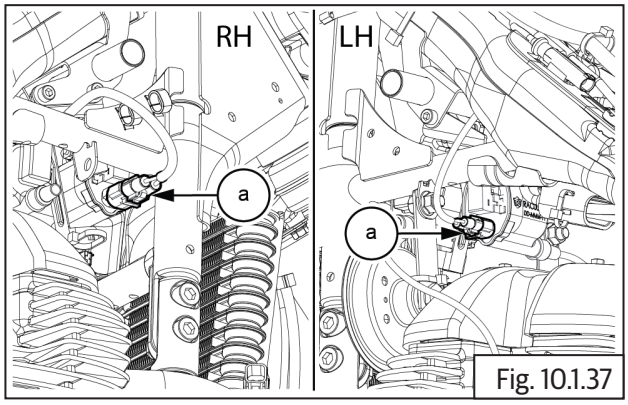

Fig. 10.1.37

- Ensure Ignition switch and Engine stop switch are in "OFF" position.
- Remove the following parts:
  - Side panel RH.(Refer----------).
  - Rider seat.(Refer----------).
  - Side panel LH.(Refer----------).

⚠ CAUTION

Ensure the following:

Fuel is drained completely from fuel tank.

Fuel feed and return hoses are disconnected from the fuel rail.

Wiring couplers to fuel pump and low fuel sensor are disconnected.

⚠ WARNING

Gasoline is extremely flammable and highly explosive. Improper handling can lead to fatal accident or serious injury.

- Disconnect spark plug caps from the LH spark plug **(a)**.

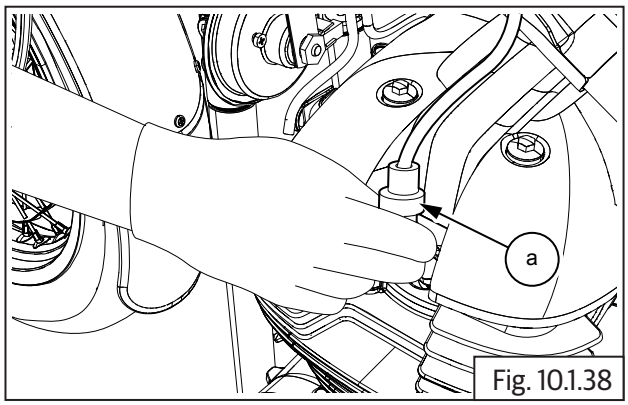

Fig. 10.1.38

- Disconnect spark plug cap **(a)** from the RH side engine **(b)**.

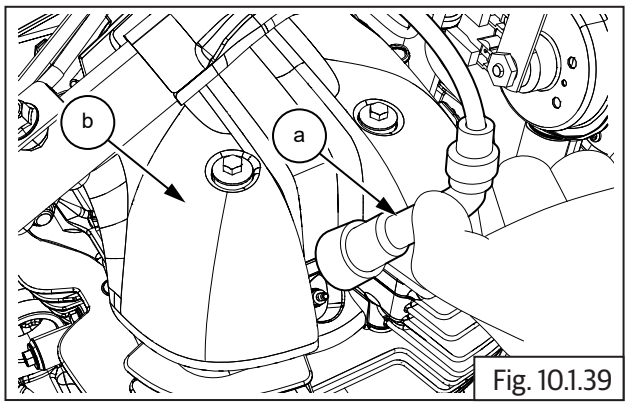

Fig. 10.1.39

- Disconnect wiring couplers **(a)** from the ignition coil on both LH and RH sides.

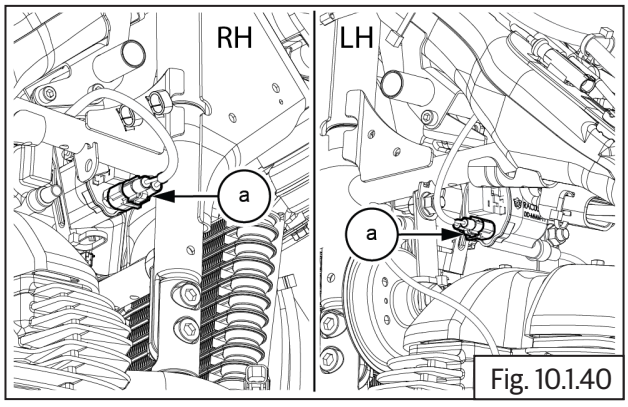

Fig. 10.1.40

- Loosen and remove 3Nos cap bolts **(M6) (a)** from main frame LHS and RHS.

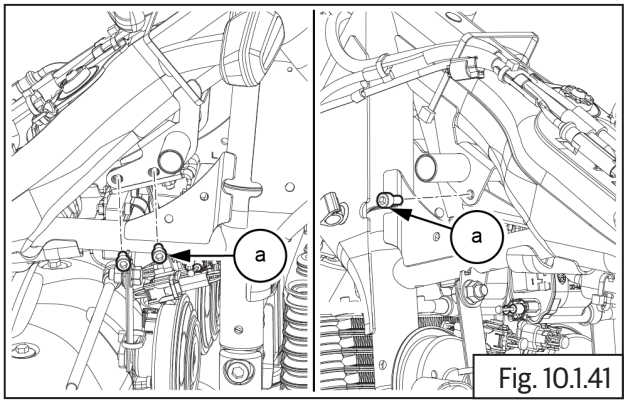

Fig. 10.1.41

	5 mm Allen Socket with Ratchet

- Gently slide out Ignition coil **(a)** from frame and remove along HT cables .

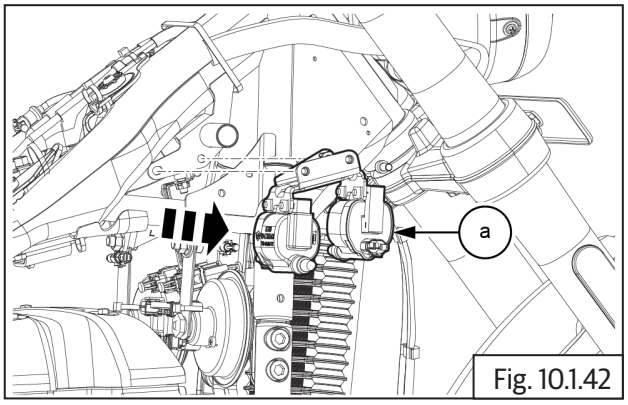

Fig. 10.1.42

- Loosen and remove. cap bolts 4 Nos **(M6) (a)** from LHS and RHS ignition coi.

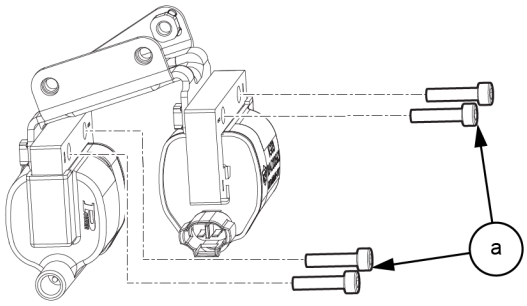

Fig. 10.1.43

	5 mm Allen Socket with Ratchet

- Separate ignition coil LHS and RHS from bracket **(a)**.

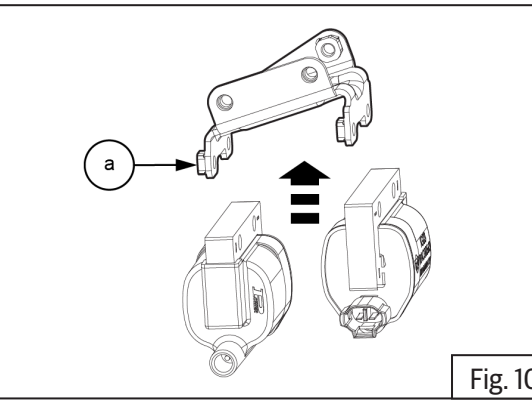

Fig. 10.1.44

10.1.14. Crank Position Sensor

- The crank position sensor **(a)** is located inside the engine cover LH and attached to the stator coil.

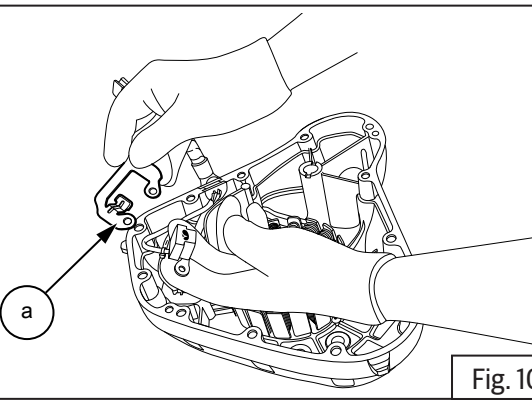

Fig. 10.1.45

- Ensure Ignition switch and Engine stop switch are in "OFF" position.
- Drain engine oil.
- Disconnect wiring coupler **(a)** of stator from main wiring harness **(b)**.

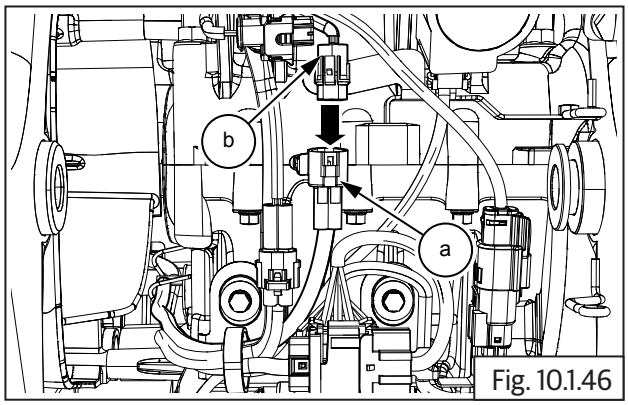

Fig. 10.1.46

- Remove FD sprocket cover.(Refer----------)
- Remove cover LH from Engine.(Refer----------)
- Loosen and remove 3 Nos. Hex socket head screws **(M6) (a)** holding stator coil.

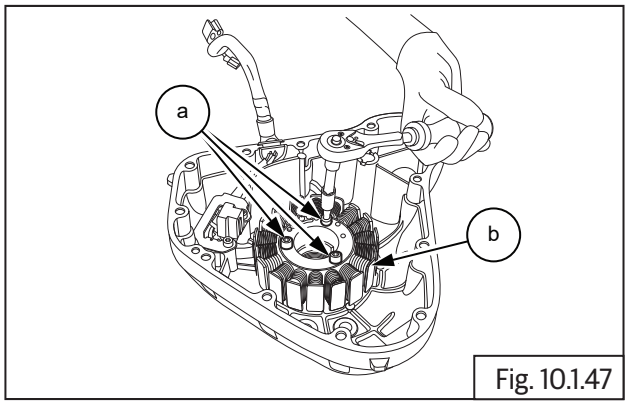

Fig. 10.1.47

	5 mm Socket with Ratchet

- Loosen and remove 2 Nos. Hex socket head bolts **(M5) (a)** holding crankshaft position sensor guide plate **(b)** to cover LH.

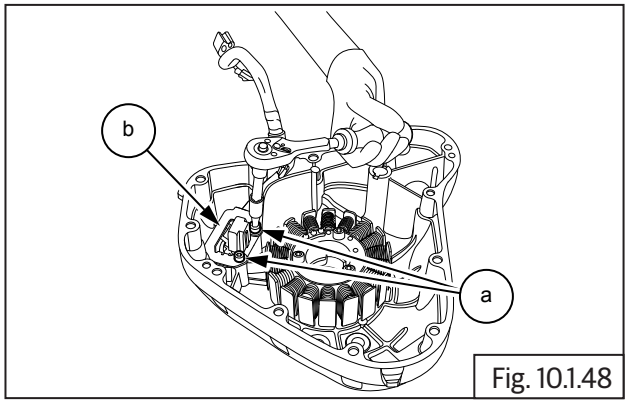

Fig. 10.1.48

	4 mm Socket with Ratchet

- Remove guide plate **(a)** from LH cover.

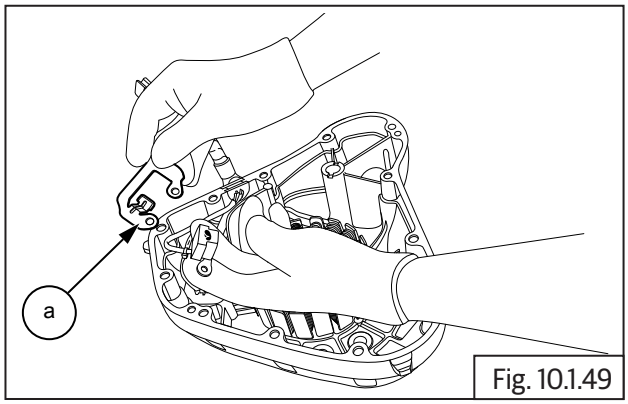

Fig. 10.1.49

- Gently slide out wiring harness, rubber grommet **(a)** from the slot in cover LH and remove stator coil along with crank shaft position sensor **(b)**.

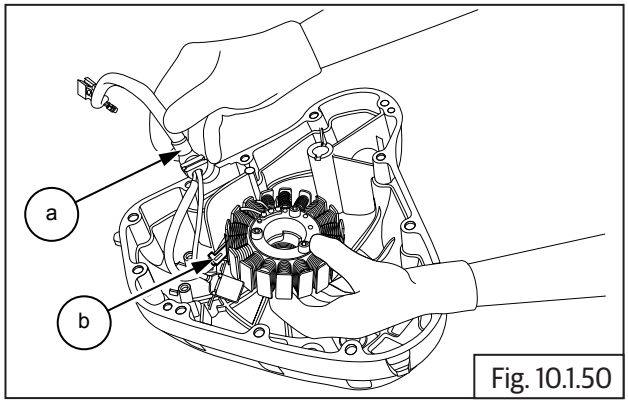

Fig. 10.1.50

10.1.15. Gear Position Sensor

- The gear position sensor **(a)** is located on the crankcase LH before FD sprocket.

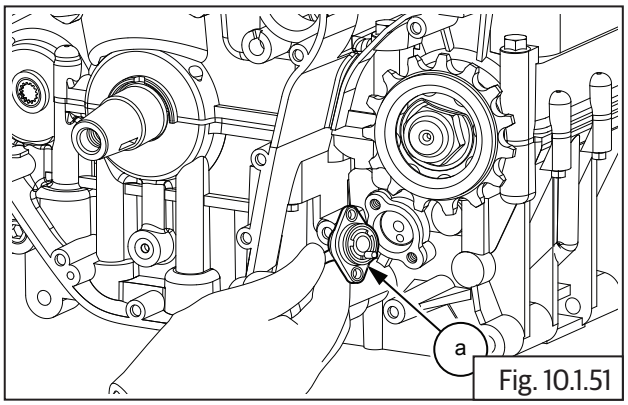

Fig. 10.1.51

- Ensure Ignition switch and engine stop switch are in OFF position.
- Disconnect wiring coupler **(a)** of gear position sensor from main wiring harness **(b)**.

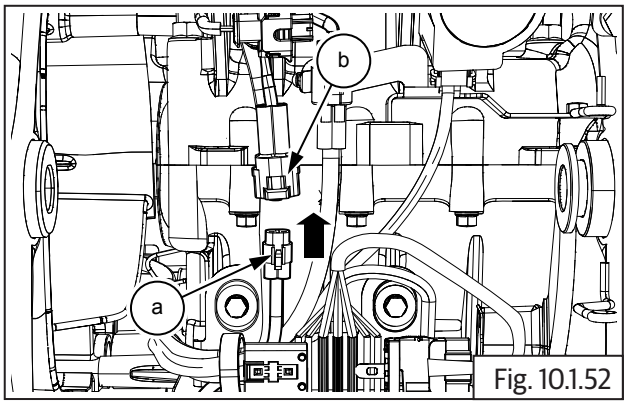

Fig. 10.1.52

- Remove FD sprocket cover.(Refer----------).
- Loosen and remove 2 Nos. Hex head bolts **(M6) (a)** holding the gear position sensor to crankcase LH **(b)**.

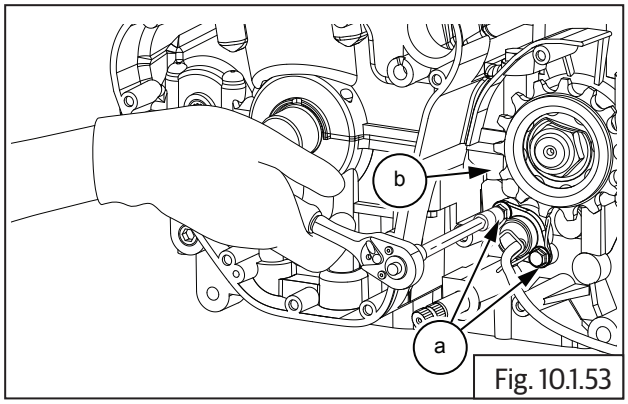

Fig. 10.1.53

	10 mm Socket with Ratchet

- Remove cable bracket **(a)** and gently pull out gear position sensor from crankcase LH.

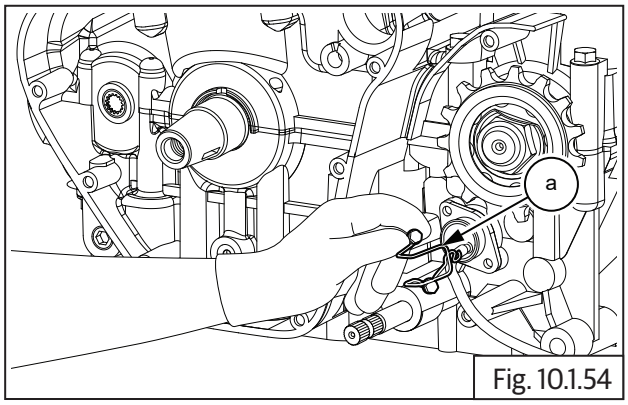

Fig. 10.1.54

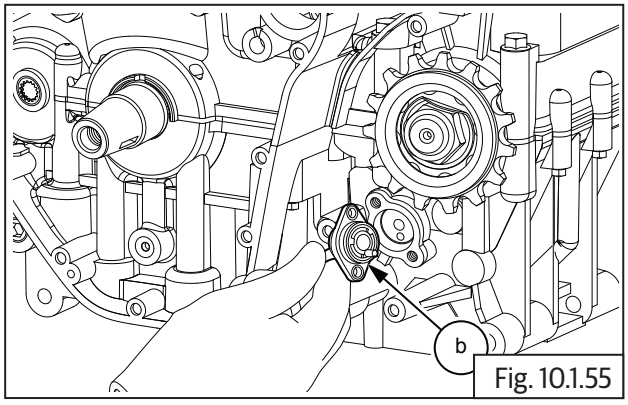

Fig. 10.1.55

10.1.16. Clutch Switch

- Remove headlamp assembly.(Refer----------).
- Disconnect clutch switch connector **(a)**.

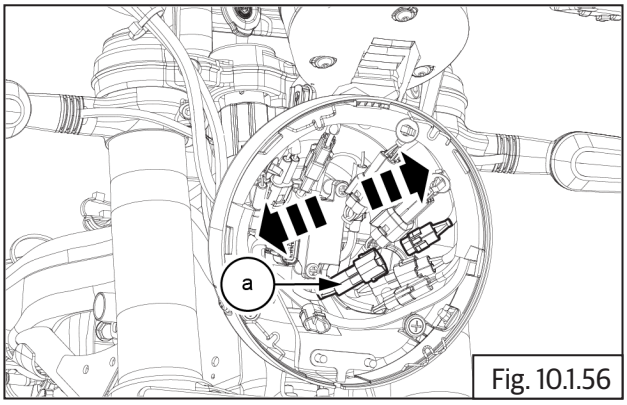

Fig. 10.1.56

- Loosen and remove 2 Nos of screws **(a)** from clutch lever **(b)**.

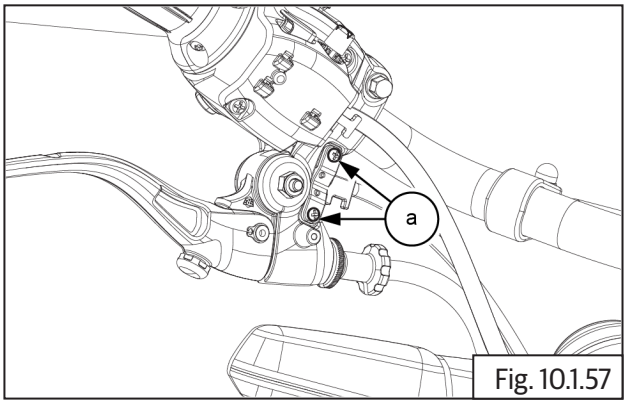

Fig. 10.1.57

	Screw Driver (+)

10.1.17. Side Stand Switch

⚠ CAUTION

Ensure the motorcycle is upright on a firm and flat surface.

- Locate a scissor jack under cradle frame and lift motorcycle such that the wheel is off the ground.

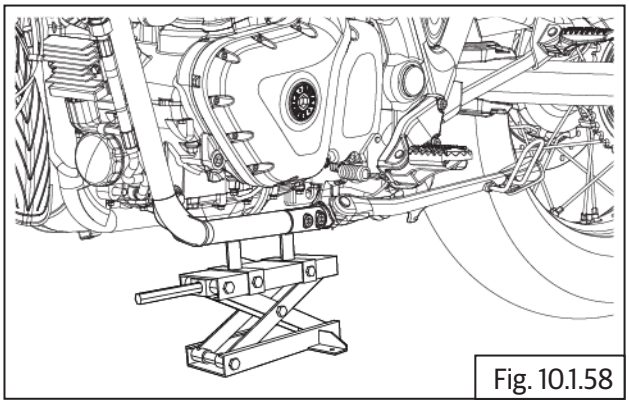

Fig. 10.1.58

⚠ CAUTION

Be extremely careful when removing and installing the springs as the combined tension of the springs is very strong.

- Remove spring **(a)** from side stand.

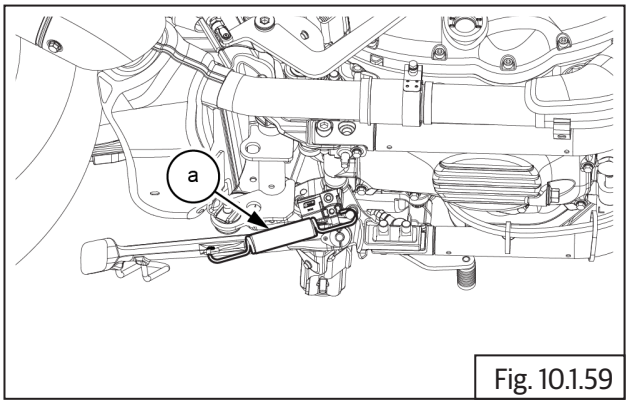

Fig. 10.1.59

	Phillips screw driver

- Remove split pin **(a)** from clevis pin.

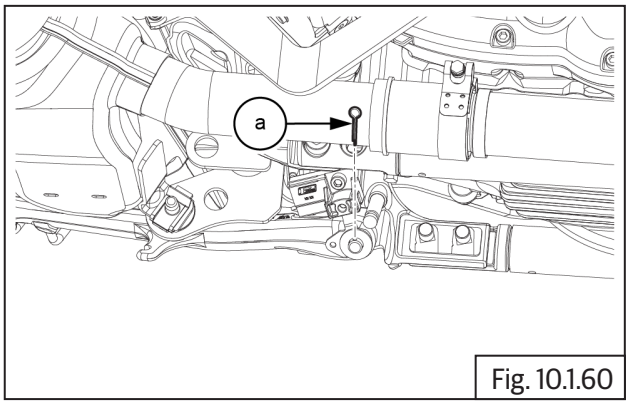

Fig. 10.1.60

	Nose plier

- Remove clevis pin **(a)** and washer **(b)** from side stand.

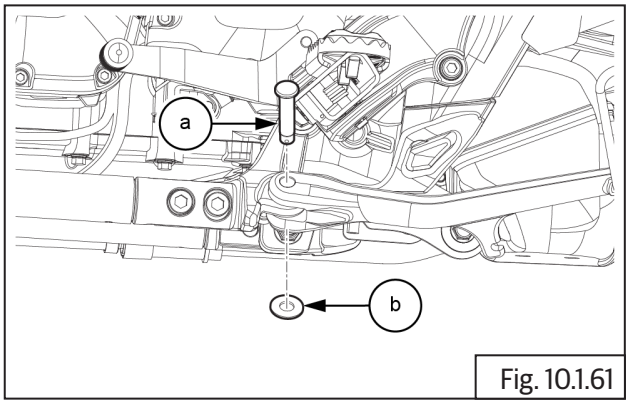

Fig. 10.1.61

	Nose plier

- Remove the side stand **(a)** from frame.

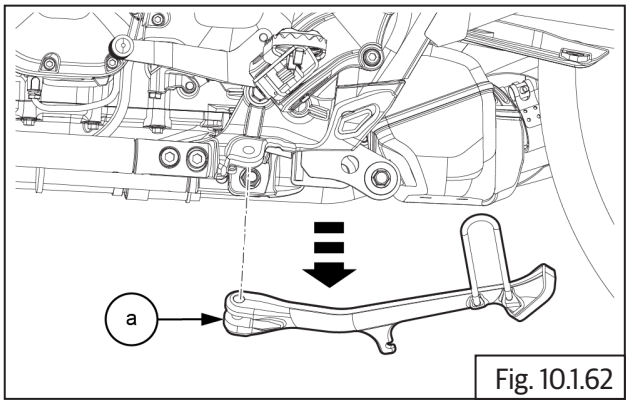

Fig. 10.1.62

- Disconnect the side stand switch coupler **(a)**.

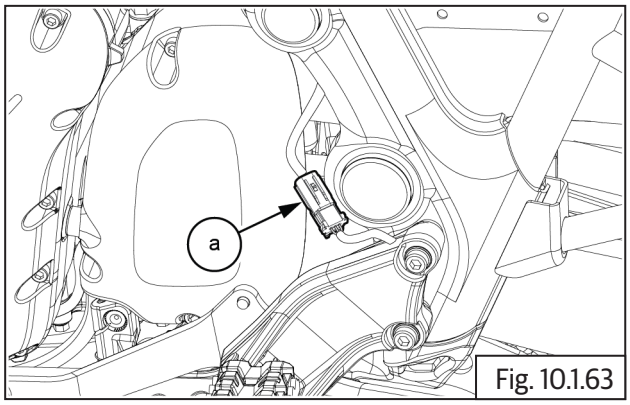

Fig. 10.1.63

- Detach the wire tag **(a)** from side stand switch wiring harness.

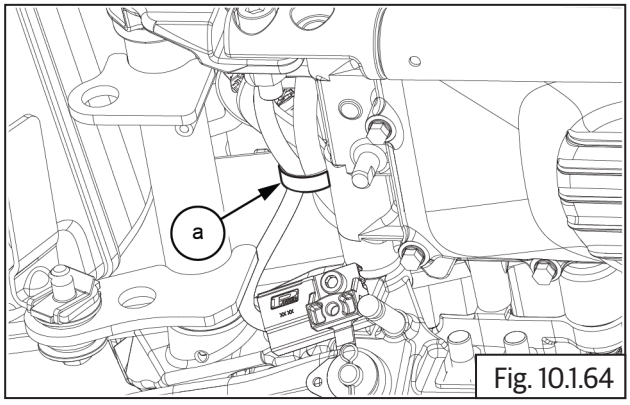

Fig. 10.1.64

	Nose plier

- Loosen and remove hex head cap crew **(M6) (a)** from side stand switch .

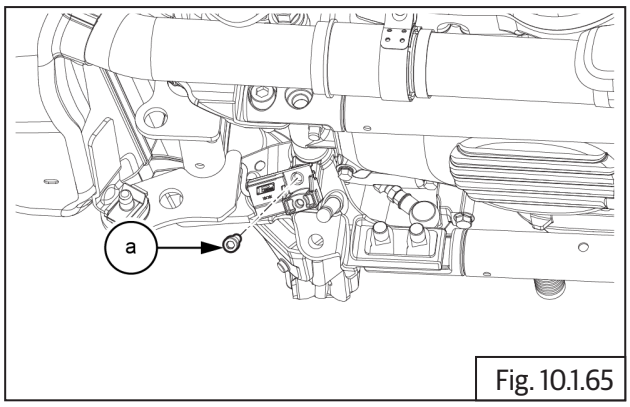

Fig. 10.1.65

	5 mm Allen Socket with Ratchet

- Remove the side stand switch with harness **(a)** from frame .

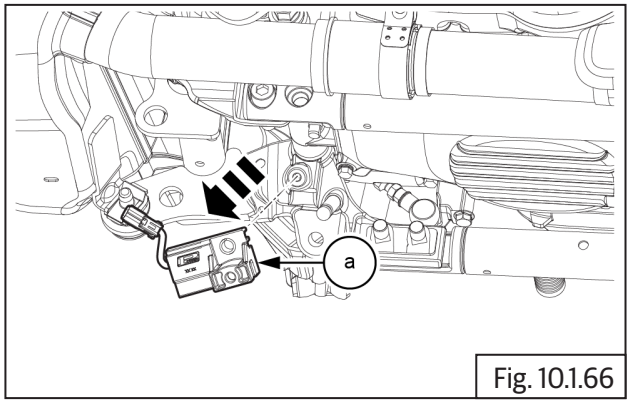

Fig. 10.1.66

10.1.18. Starter Motor Solenoid

- Remove the following parts:
  - Rear wheel.(Refer----------)
  - Rear mudguard in fill cover.(Refer----------)
- Locate solenoid connectors below battery tray, ensure ignition off.
- Disconnect starter solenoid connectors **(a)** from wiring harness located below battery tray.

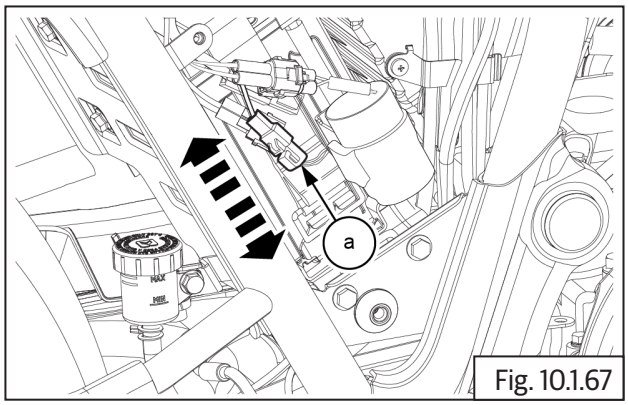

Fig. 10.1.67

- Disconnect starter solenoid connectors **(a)** from wiring harness located below battery tray.

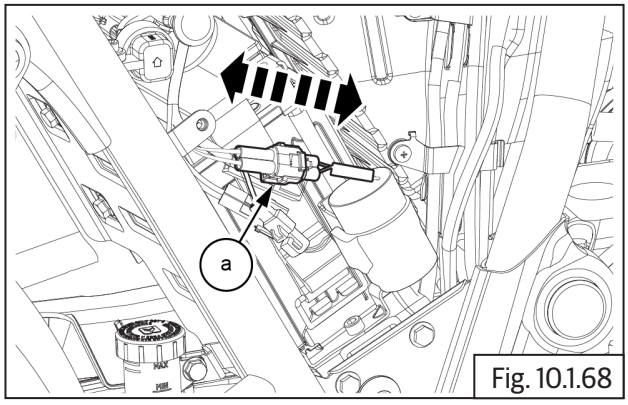

Fig. 10.1.68

- Gently slide and remove solenoid coil **(a)** from battery tray bracket **(b)**.

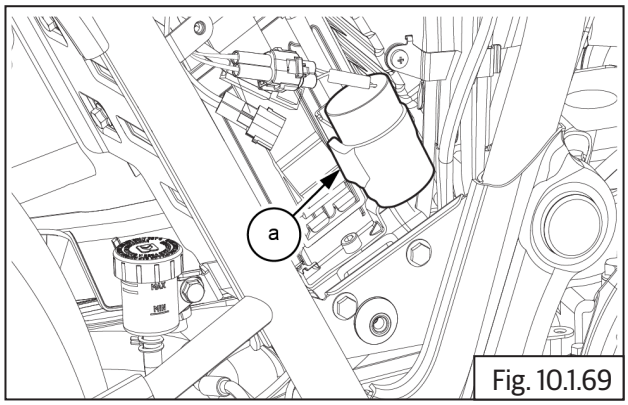

Fig. 10.1.69

Assembly

10.1.19. Engine Control Unit (ECU)

⚠ CAUTION

Before assembling any part of the EMS, the Ignition switch and Engine stop switch MUST be in OFF position

Before connecting ECU into wiring harness, the battery terminals must be disconnected from the battery.

- Position the ECU **(a)** onto the chassis frame.

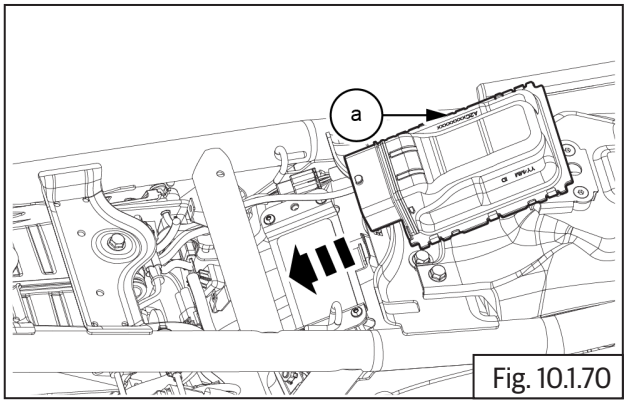

Fig. 10.1.70

- Connect the ECU connector **(a)**.
- Ensure the lock properly seated.

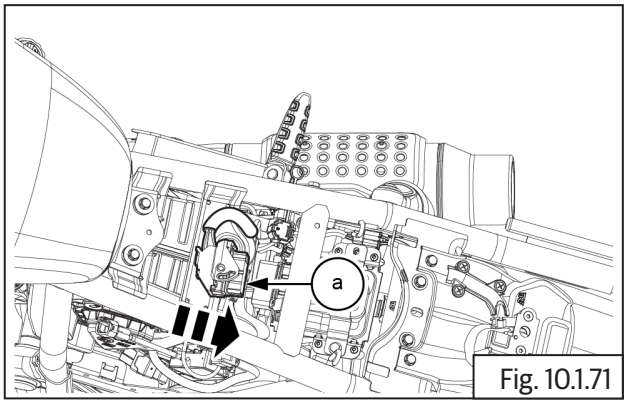

Fig. 10.1.71

- Locate the bracket **(a)** to the ECU.

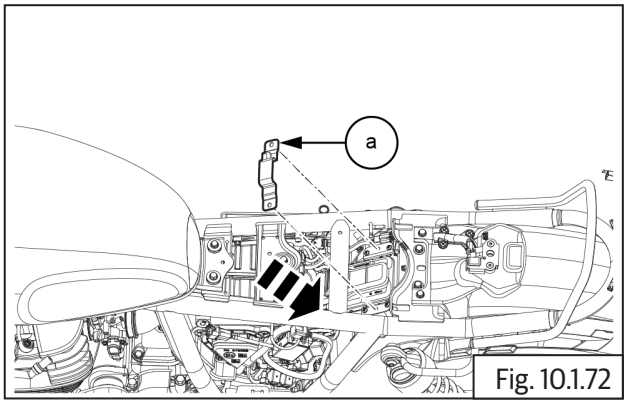

Fig. 10.1.72

- Secure the ECU to the infill cover using 2 Nos hex head collar bolts **(M6) (a)**. Tighten the bolts securely.

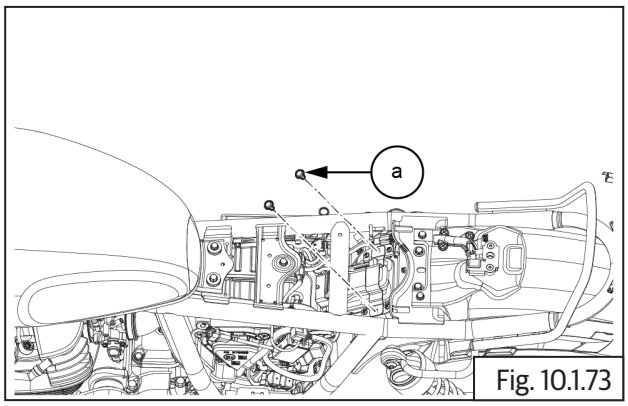

Fig. 10.1.73

	10 mm Socket with Ratchet
	8-12 Nm / 0.8 - 1.2 kgf-m

⚠ CAUTION

Ensure the locks are fully lifted up and released, before connecting wiring connectors into ECU.

Insert the wiring harness connector (Green point tape) into ECU connector (2) and lock fully closed.

Insert the wiring harness connector (Yellow point tape) into ECU connector (1) and lock fully closed.

Ensure the locks are handled with care and do not get damaged or broken

Damaged or broken locks will result in loose connections and cause the ECU to fail.

- Connect battery terminals.(Refer----------)
- Assemble rider seat.(Refer----------)
- Assemble side panel RH.(Refer----------)

10.1.20. Fuel Pump

- Locate new O-rings **(a)** and on fuel pump **(b)**. Ensure it is seated properly.

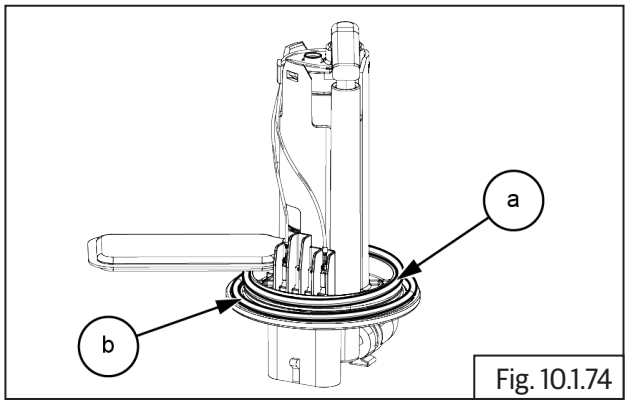

Fig. 10.1.74

NOTE

- *Do not reuse the "O" Rings, Renew "O" Rings*

- Assemble fuel pump **(a)** into tank **(b)** with outlet and return pipes facing towards front of the tank.

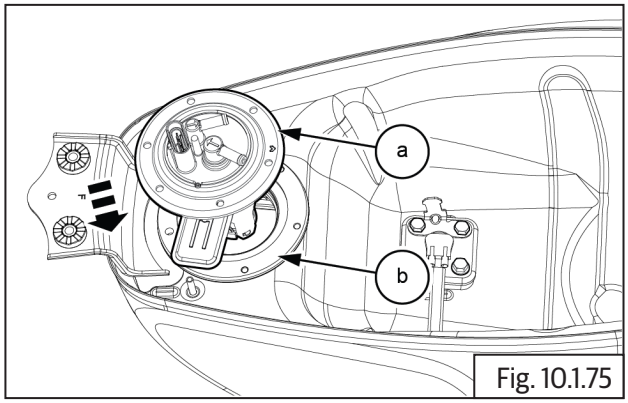

Fig. 10.1.75

- Locate and tighten **6Nos** Hex socket head bolts **(M5) (a)** to assemble fuel pump **(b)** on fuel tank .

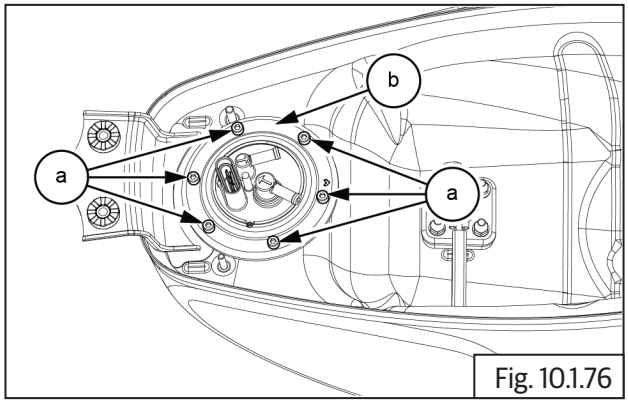

Fig. 10.1.76

	4 mm Socket with Ratchet
	4- 6 Nm / 0.4 - 0.6 kgf-m

- Assemble fuel tank assembly.(Refer----------)

⚠ CAUTION

Ensure the following:

Fuel is refilled into fuel tank.

Fuel feed and return hoses are connected into fuel rail.

Wiring couplers to fuel pump and low fuel sensor are connected.

EVAP hose pipes are connected.

Water drain hose are connected.

⚠ WARNING

Gasoline is extremely flammable.

- Assemble rider seat.(Refer----------)
- Assemble side panel RH.(Refer----------)

10.1.21. Fuel injectors

- Fuel injectors are located on throttle body along with rail.
- Ensure the O-rings **(a)** and **(b)**.

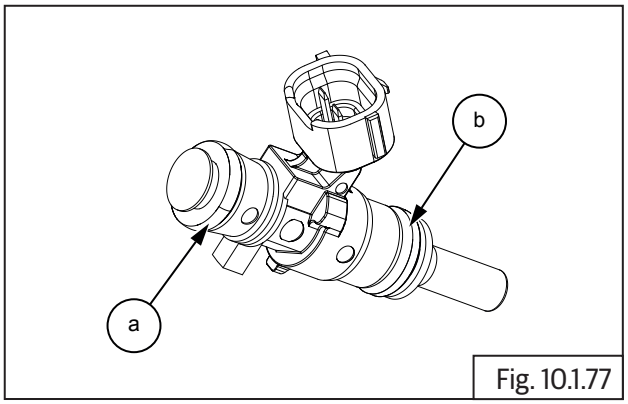

Fig. 10.1.77

- Gently assemble injectors **(a)** into fuel rail **(b)** along with upper and lower O-rings .
- Gently assemble injector lock **(c)** into fuel rail and injector.

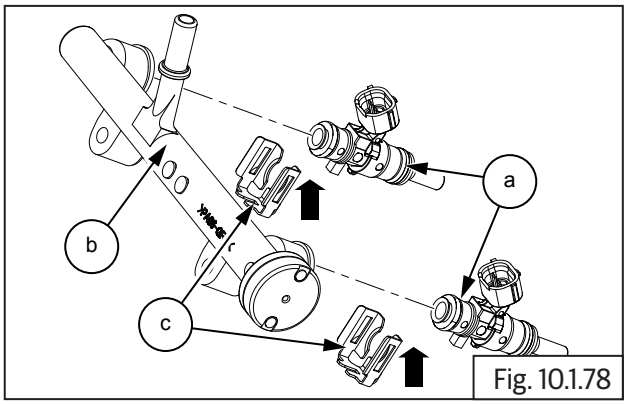

Fig. 10.1.78

- Gently locate fuel rail **(a)** along with injectors **(b)** into throttle body.

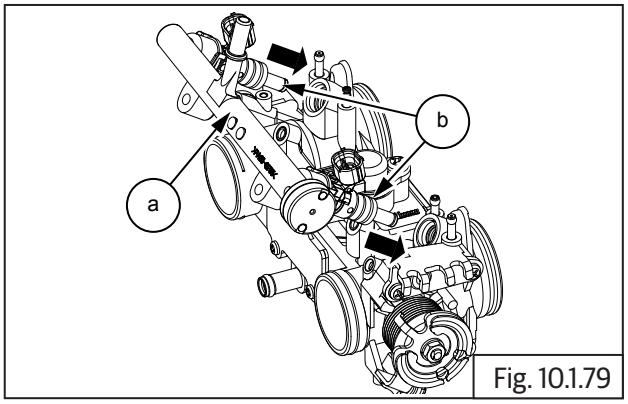

Fig. 10.1.79

- Insert and tighten 2 Nos. button head screws **(a)** into fuel injector rail **(b)** located on throttle body.

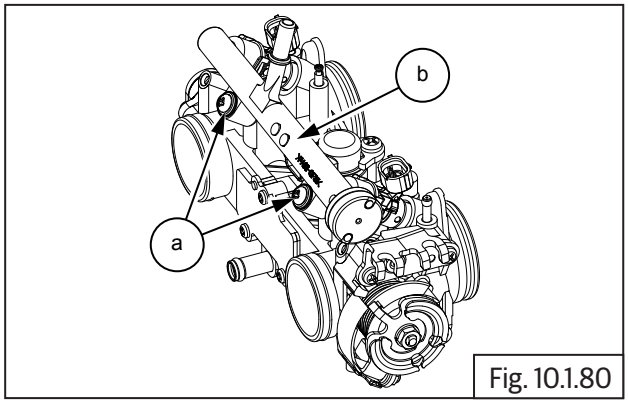

Fig. 10.1.80

	Screw driver (+)

- Assemble throttle body.

⚠ CAUTION

Ensure the following:

Fuel is refilled into fuel tank.

Fuel feed and return hoses are connected into fuel rail.

Wiring couplers to fuel pump and low fuel sensor are connected.

EVAP hose pipes are connected.

Water drain hose are connected.

- Assemble the following parts:
  - Fuel tank.(Refer----------)
  - Rider seat.(Refer----------)
  - RH side cover.(Refer----------)

10.1.22. Manifold Absolute Pressure Sensor (MAP)

- Ensure Ignition switch and Engine stop switch are in "OFF" position.
- Lock wiring harness connector **(a)** into MAP sensor connector .

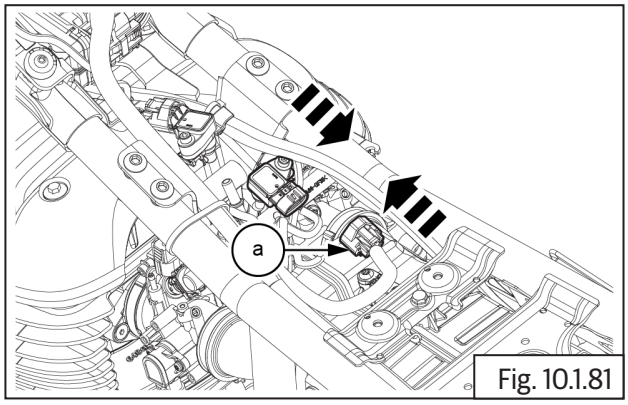

Fig. 10.1.81

- Insert and tighten Hex socket head bolts along with washer **(M5) (a)** to fix MAP sensor **(b)** into frame nearest engine steady bracket.

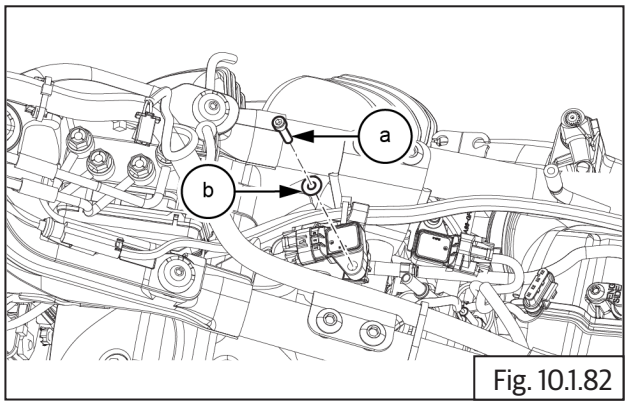

Fig. 10.1.82

	4 mm Socket with Ratchet
	5- 7 Nm / 0.5 - 0.7 kgf-m

- Connect MAP Vacuum hose **(a)** into throttle body **(b)**.

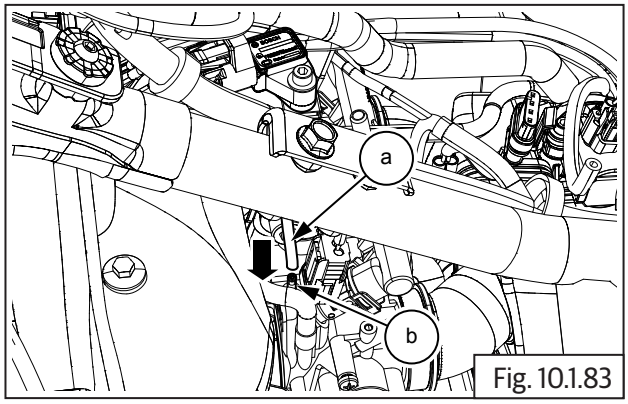

Fig. 10.1.83

- Assemble fuel tank assembly.(Refer----------)

⚠ WARNING

Gasoline is extremely flammable.

⚠ CAUTION

Ensure the following:

Fuel is refilled into fuel tank.

Fuel feed and return hoses are connected into fuel rail.

Wiring couplers to fuel pump and low fuel sensor are connected.

EVAP hose pipes are connected.

Water drain hose are connected

- Assemble rider seat.(Refer----------)
- Assemble side panel RH.(Refer----------)

10.1.23. Idle Speed Controller (ISC - Stepper Motor)

- Locate stepper motor **(a)** into throttle body **(b)** along with new O-ring and spring **(c)**.

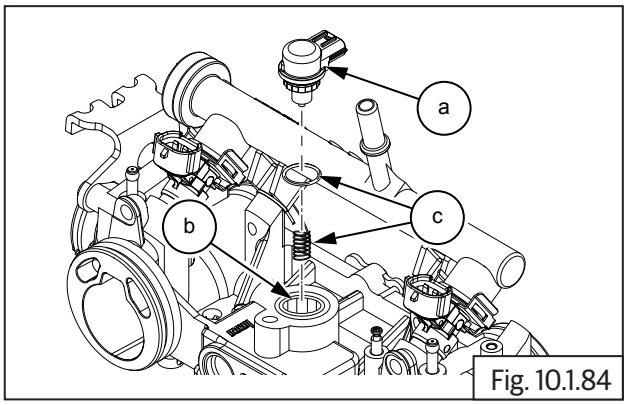

Fig. 10.1.84

- Insert and tighten button head screw **(a)** into ISC stepper motor clamp **(b)**.

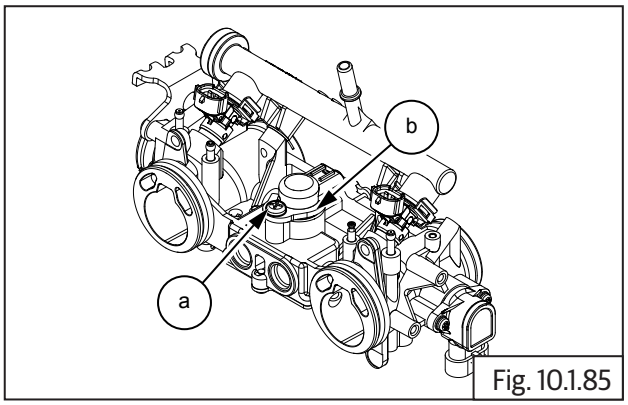

Fig. 10.1.85

	Screw driver (+)

10.1.24. Throttle Body

- Ensure Ignition switch and Engine stop switch are in ''OFF'' position.

NOTE

- *Ensure both screws are sufficiently loosened and the worm clips rotates easily in the groove in the manifolds.*
- *Ensure both screws are sufficiently loosened, and the worm clips rotates easily in the groove in the air filter bellows worm clips.*

- Gently locate throttle body into inlet manifold rubbers with fuel rail and injectors and ISC/TPS.
- Tighten worm clip screw on inlet manifold on Cylinder (RH)
- Tighten worm clip screw on inlet manifold on Cylinder (LH) .
- Tighten wire clips on the LH and RH air filter connection tubes.
- Tighten the 2 Nos. air filter box assembly mounting bolts.
- Insert MAP sensor vacuum hose into throttle body.
- Insert EVAP hoses into throttle body.
- Connect electrical couplers into TPS, idle speed control stepper motor and Fuel injectors LH and RH.
- Assemble the following:
  - Throttle cable.(Refer----------)
  - Throttle body covers LH and RH.(Refer----------)
  - Fuel tank assembly.(Refer----------)

⚠ CAUTION

Ensure the following:

Fuel is refilled into fuel tank.

Fuel feed and return hoses are connected into fuel rail.

Wiring couplers to fuel pump and low fuel sensor are connected.

EVAP hose pipes are connected.

Water drain hose are connected.

⚠ WARNING

Gasoline is extremely flammable.

10.1.25. Throttle Position sensor (TPS)

- The TPS **(a)** is located on the left side of the throttle body and should NOT BE REMOVED from the throttle body under any circumstances.

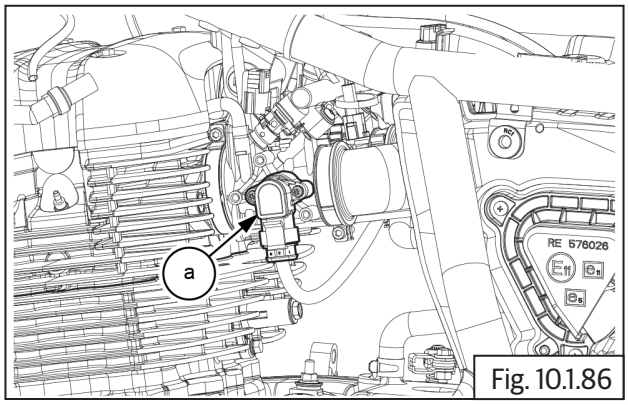

Fig. 10.1.86

10.1.26. Engine Oil Temperature Sensor (EOT)

- The EOT **(a)** is located on the LH side cylinder head below the throttle body.

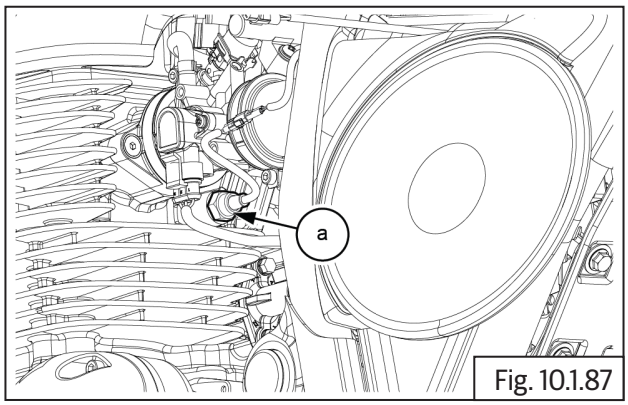

Fig. 10.1.87

- Locate EOT sensor **(a)** along with O-ring **(b)** into engine head assembly **(c)**.

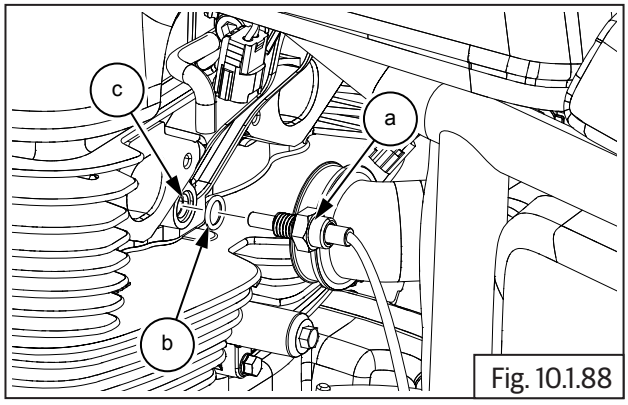

Fig. 10.1.88

	4 mm Socket with Ratchet
	4- 6 Nm / 0.4 - 0.6 kgf-m

- Connect EOT sensor connector **(a)** into wiring harness **(b)** above throttle body.
- Ensure connector is locked and wire is routed correctly.

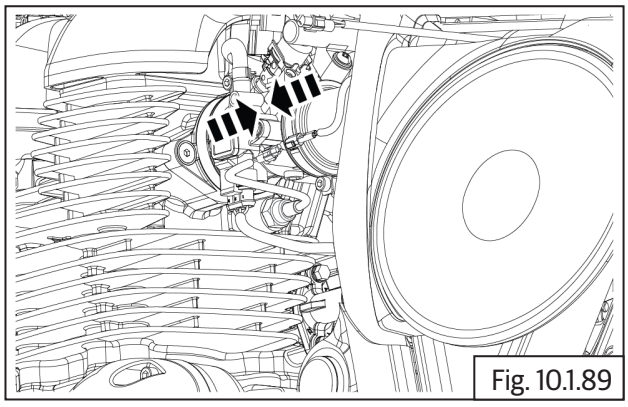
Fig. 10.1.89

- Assemble throttle body cover LH.(Refer----------)

10.1.27. HEGO (O2) Sensors

- The HEGO sensors are located on the exhaust pipes near the cylinder head.

⚠ WARNING

The engine and exhaust systems get extremely hot during normal operation and can result in serious burns if touched. Make sure exhaust pipes are not hot and is at the same levels of ambient/surrounding temperature, whenever working on the engine or exhaust systems.

NOTE

- *Ensure the engine/exhaust is cold before assembling the HEGO (O2) sensors.*
- *Ensure Ignition switch and Engine stop switch are in OFF position.*

- Locate and tighten Oxygen sensor **(a)** on the CAT box.

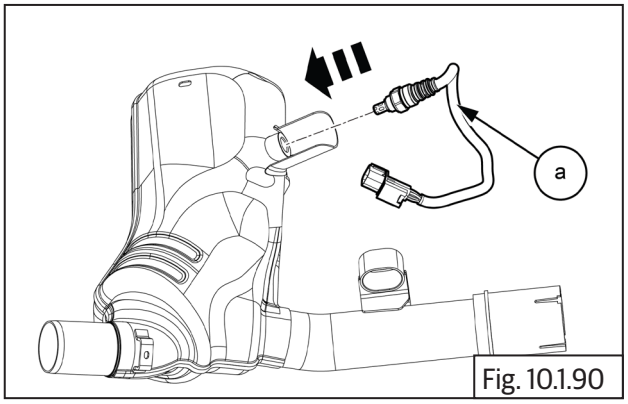

Fig. 10.1.90

	17 mm Combination spanner/Deep groove Socket with Ratchet
	16-20 Nm / 1.6 - 2.0 kgf-m

⚠ CAUTION

DO NOT over tighten as it damage the sensor.

- Locate and tighten Oxygen sensor **(a)** on the exhaust pipe.

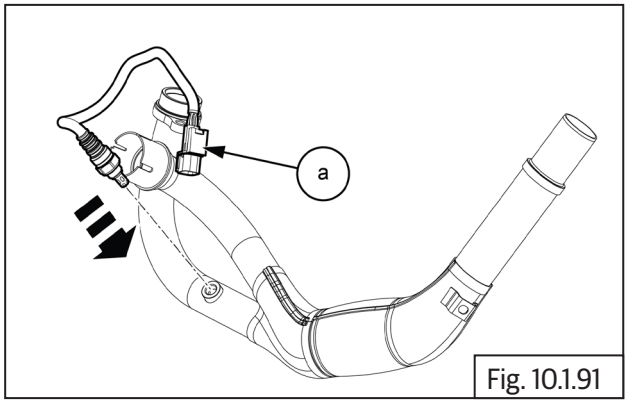

Fig. 10.1.91

	17 mm Combination spanner/Deep groove Socket with Ratchet
	16-20 Nm / 1.6 - 2.0 kgf-m

- Locate and tighten Oxygen sensor **(a)** on the LHS exhaust pipe.

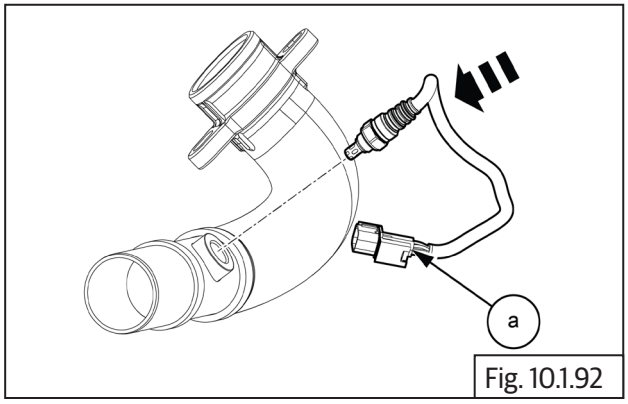

Fig. 10.1.92

	17 mm Combination spanner/Deep groove Socket with Ratchet
	16-20 Nm / 1.6 - 2.0 kgf-m

- Connect the CAT box Oxygen Sensor coupler **(a)**.

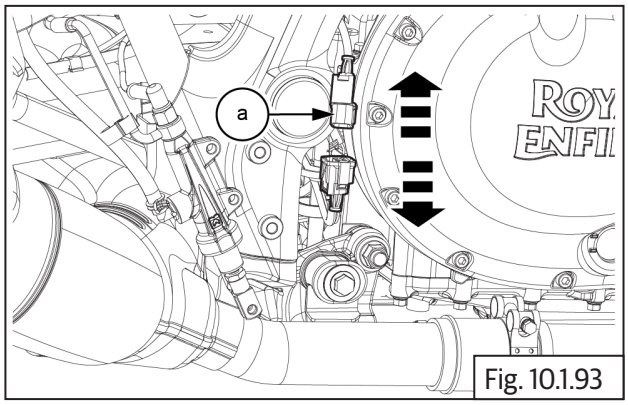

Fig. 10.1.93

- Connect the Oxygen Sensor sensor connectors **(a)** to both LHS and RHS on the front side of the engine.

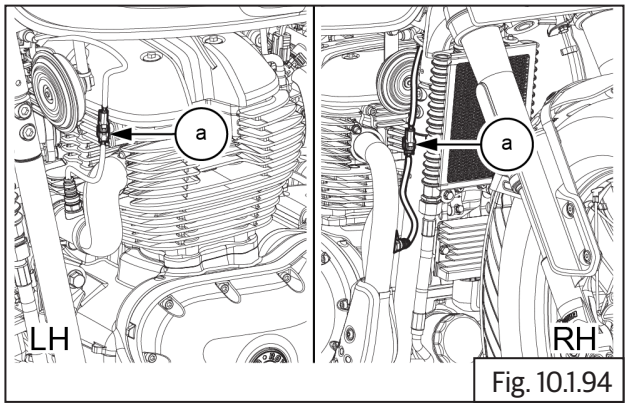

Fig. 10.1.94

- Fix the omega clips **2Nos (a)** to the LHS and RHS Oxygen Sensor wiring harness.

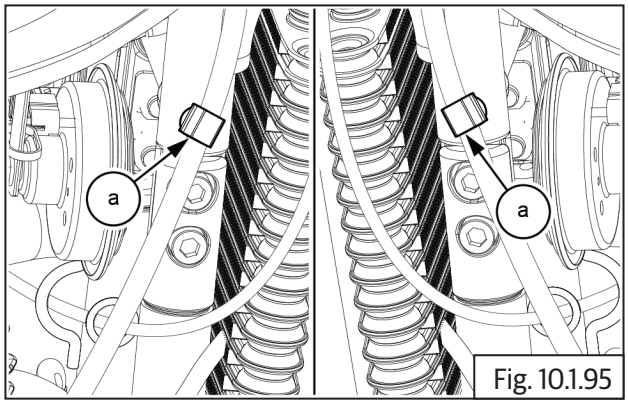

Fig. 10.1.95

- Connect the battery terminals. (Refer_____).

10.1.28. Intake Air Temperature sensor (IAT)

- Gently locate IAT sensor **(a)** into air filter housing.

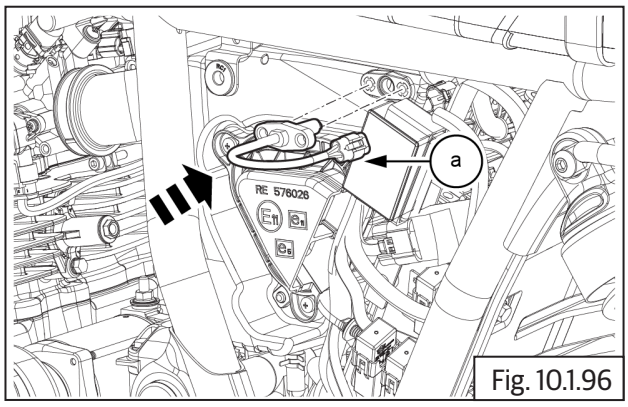

Fig. 10.1.96

- Connect IAT sensor **(a)** coupler.

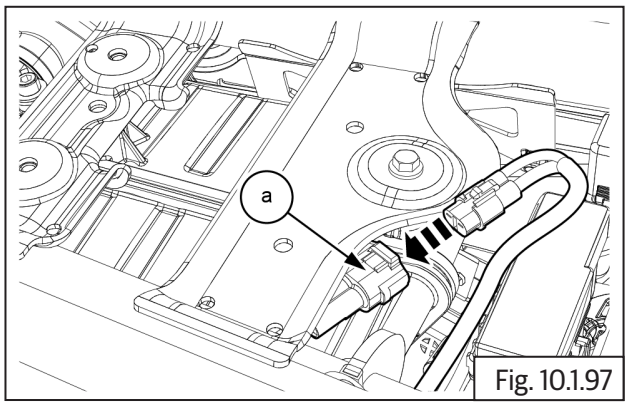

Fig. 10.1.97

- Insert and tighten 2 Nos. Hex socket head cap screw **(M5) (a)** into IAT sensor **(b)**.

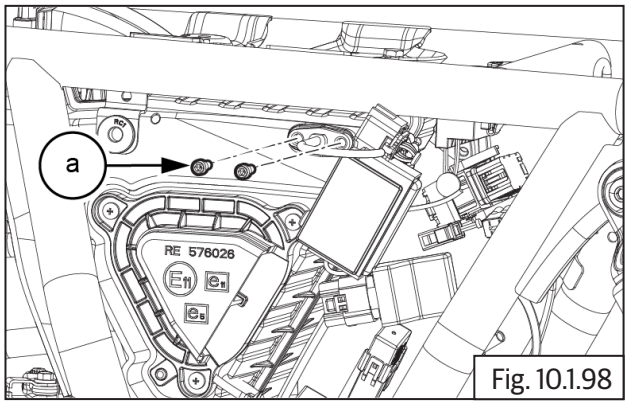

Fig. 10.1.98

	4 mm Socket with Ratchet
	2- 4 Nm / 0.2 - 0.4 kgf-m

- Ensure IAT sensor **(a)** seated properly.

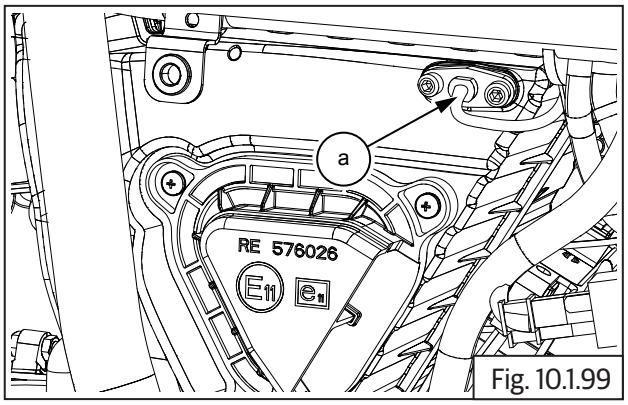

Fig. 10.1.99

- Assemble the following parts:
  - Side panel LH. (Refer_____)
  - Rider seat. (Refer_____)
  - Side panel RH. (Refer_____)

⚠ CAUTION

Ensure the following:

Fuel is refilled into fuel tank.

Fuel feed and return hoses are connected into fuel rail.

Wiring couplers to fuel pump and low fuel sensor are connected.

EVAP hose pipes are connected.

Water drain hoses are connected.

⚠ WARNING

Gasoline is extremely flammable and highly explosive. Please handle with care. Improper handling can lead to fatal accident or serious injury. Always drain/fill fuel only in a well ventilated area.

Ensure there is no scope for flames or sparks near by while draining/filling fuel.

10.1.29. Purge Valve

- Insert the purge valve into the rubber boot.

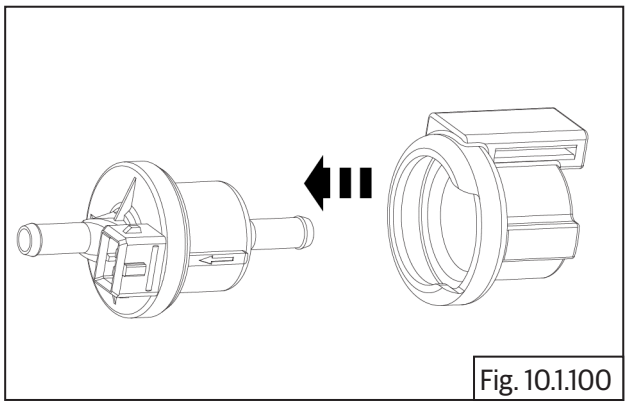

Fig. 10.1.100

- Slide the purge valve with rubber boot **(a)** into the bracket.

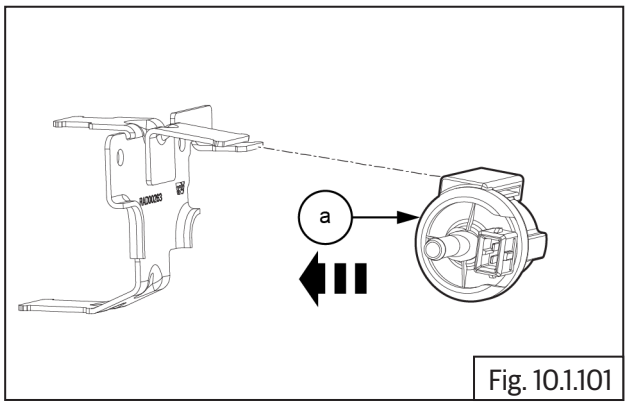

Fig. 10.1.101

- Connect the purge valve inlet **(b)** and outlet **(a)** hoses to the purge valve.

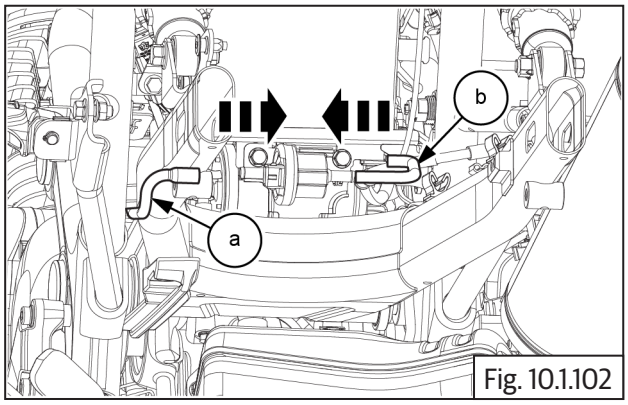

Fig. 10.1.102

- Connect the electrical connector **(a)** to the purge valve.

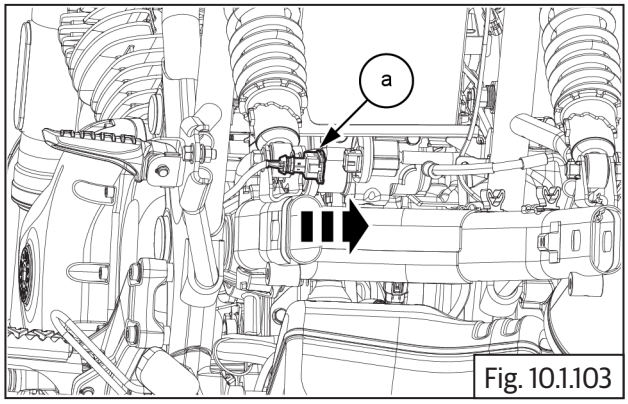

Fig. 10.1.103

- Assemble the following parts:
- Install the infill mudguard.(Refer_____)
- Install the rear mudguard.(Refer_____)
- Install the ECU.(Refer_____)
- Install the seat.(Refer_____)
- side panel LH.(Refer_____)
- Install the rider seat.(Refer_____)
- Install the side panel RH.(Refer_____)

10.1.30. Roll Over Sensor

- Install the roll over sensor **(a)** onto the chassis frame.

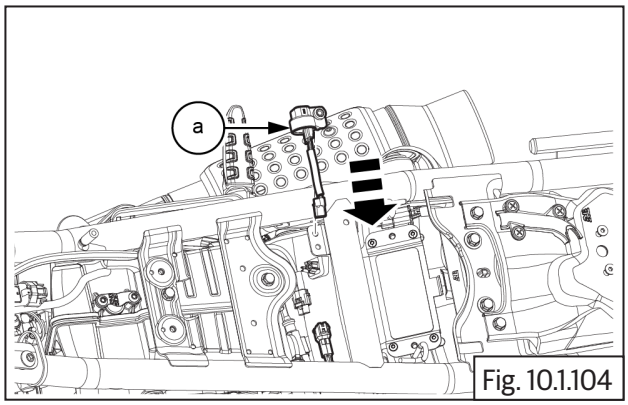

Fig. 10.1.104

- Secure the roll over sensor with the cap screw (M5) **(a)** and washer **(b)**.

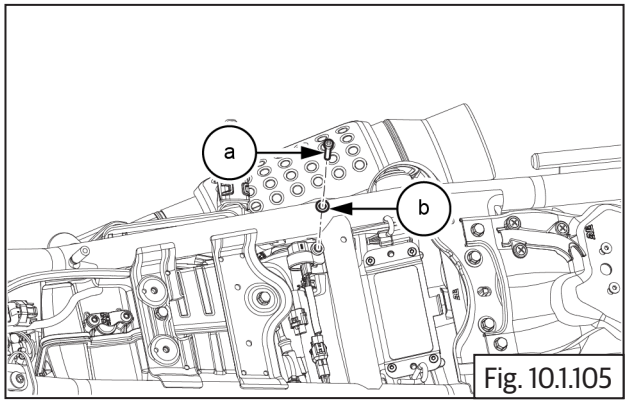

Fig. 10.1.105

	4 mm Allen socket with Ratchet
	2- 3 Nm / 0.2 - 0.3 kgf-m

- Connect the roll over sensor wiring coupler **(a)** to the main harness.

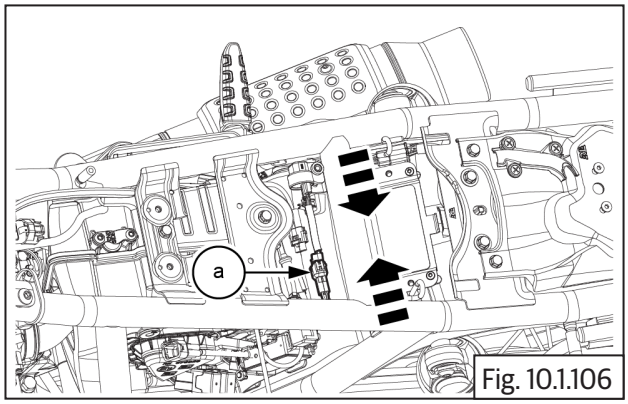

Fig. 10.1.106

- Assemble the following parts:
  - Rider seat. (Refer_____)
  - Side panel RH. (Refer_____)

10.1.31. Ignition Coil

- Locate the ignition coil LHS and RHS to the bracket **(a)**.

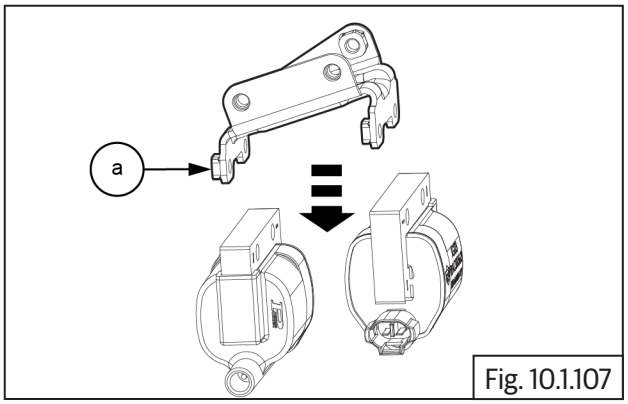

Fig. 10.1.107

- Tighten and secure cap bolts 4 Nos **(M6) (a)** on the LHS and RHS ignition coils.

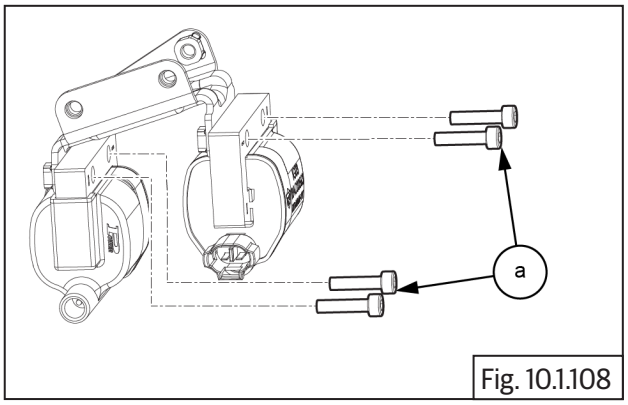

Fig. 10.1.108

	5 mm Allen socket with Ratchet
	2- 3 Nm / 0.2 - 0.3 kgf-m

- Locate ignition coil assembly **(a)** along with HT cables **(b)**.

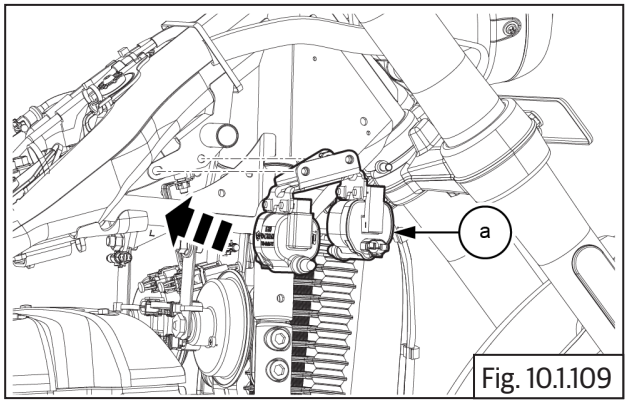

Fig. 10.1.109

- Tighten and secure the 3 cap bolts **(M6) (a)** back onto the main frame on both the LHS and RHS.

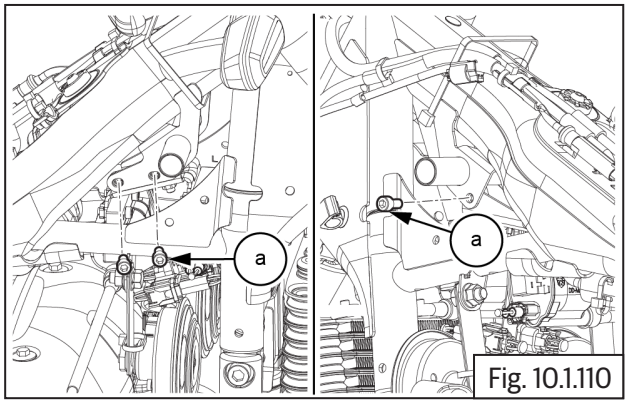

Fig. 10.1.110

	5 mm Allen socket with Ratchet
Torque	8- 12 Nm / 0.8 - 1.2 kgf-m

- Connect ignition coil connector LH and RH **(a)** from wiring harness located below fuel tank.

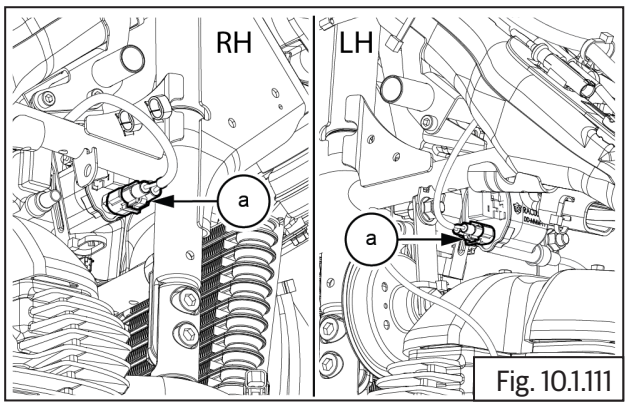

Fig. 10.1.111

- Gently insert HT cable RH **(a)** into engine spark plug **(b)**.

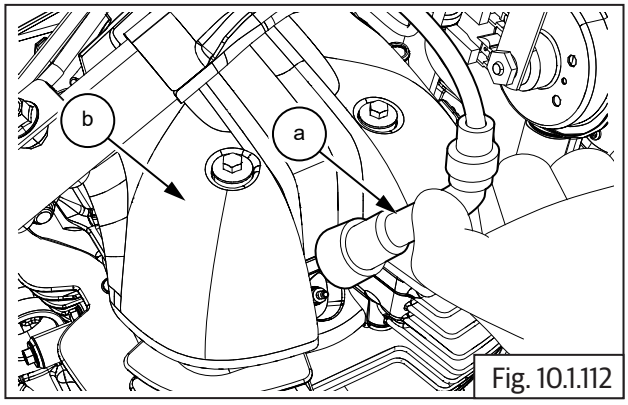

Fig. 10.1.112

- Gently insert HT cable LH **(a)** into spark plug.

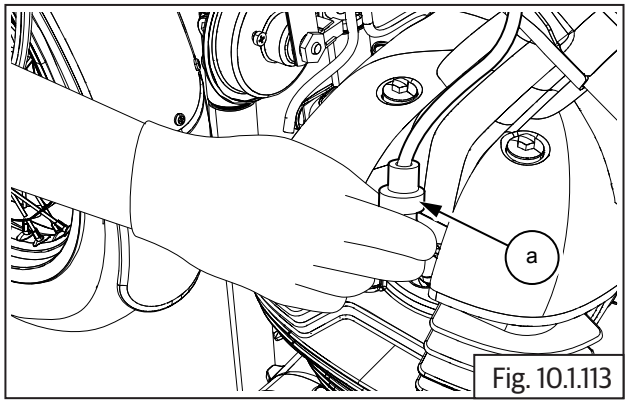

Fig. 10.1.113

- Assemble fuel tank. (Refer_____)

⚠ CAUTION

Ensure the following:

Fuel is refill into fuel tank.

Fuel feed and return hoses are connected into fuel rail.

Wiring couplers to fuel pump and low fuel sensor are connected.

EVAP hose pipes are connected.

Water drain hose are connected.

⚠ WARNING

Gasoline is extremely flammable.

- Assemble rider seat Assembly. (Refer_____)
- Assemble side panel RH. (Refer_____)

10.1.32. Crank Position Sensor

- The crank position sensor is located inside the engine cover LH and attached to the stator coil.
- Locate starter coil along with crank shaft position sensor wire assembly **(a)** into cover LH **(b)**.

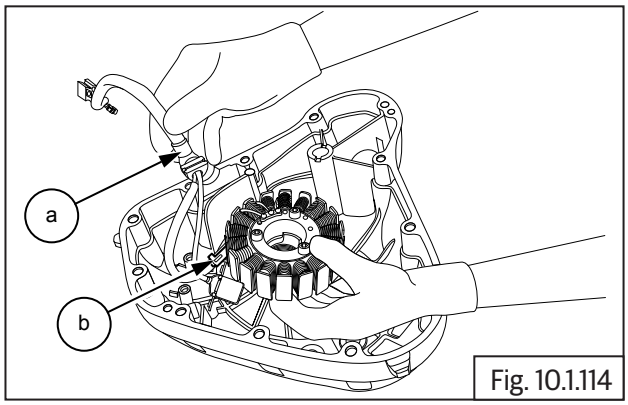

Fig. 10.1.114

- Assemble guide plate **(a)** into LH cover.

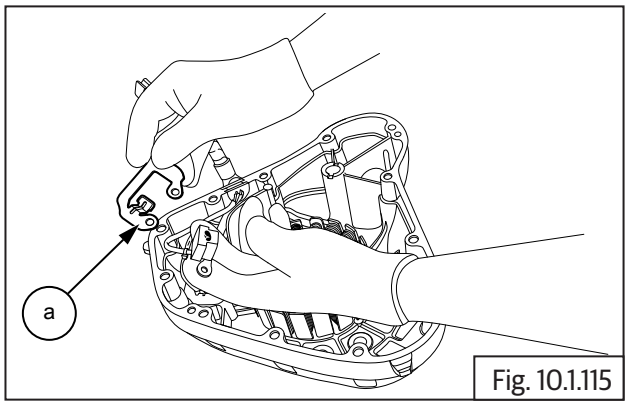

Fig. 10.1.115

- Locket and tighten 2 Nos Hex socket head screws **(M5) (a)** into guide plate **(b)**.

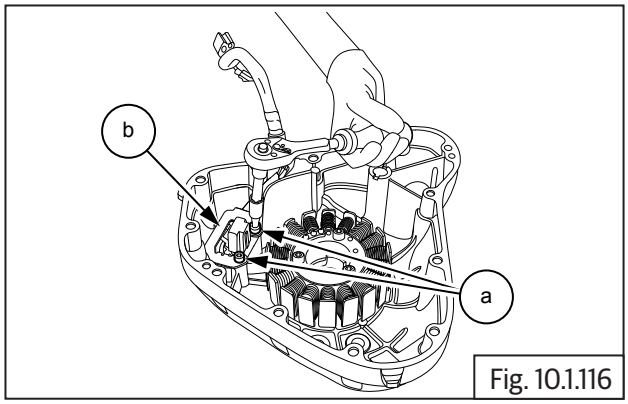

Fig. 10.1.116

	4 mm Allen key with Ratchet
Torque	8 Nm/0.8 kgf-m

- Locate and tighten 3 Nos. Hex socket head screws **(M5) (a)** into LH cover that hold starter coil **(b)**.

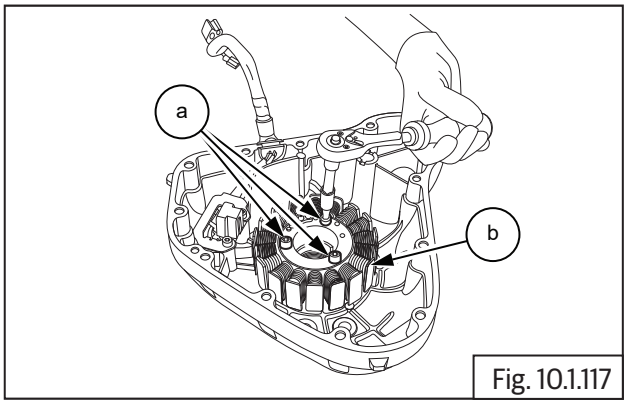

Fig. 10.1.117

	4 mm Allen key with Ratchet
Torque	10 Nm/1.0 kgf-m

- Locate crank shaft position sensor and wiring harness behind engine on RH, near RR module.
- Connect crank position sensor connector **(a)** to harness connector **(b)**.
- Ensure the wiring harness strapped properly.

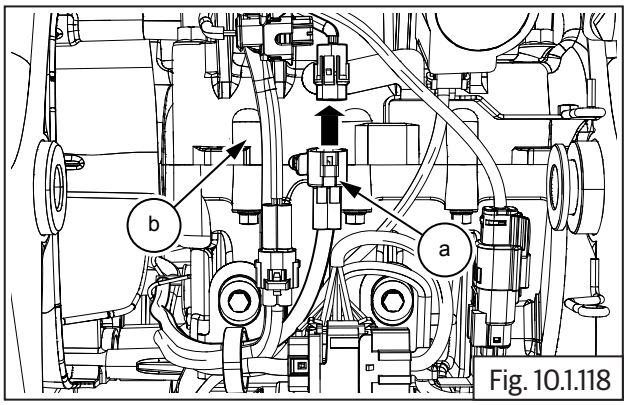

Fig. 10.1.118

- Assemble the following parts:
  - FD sprocket cover.(Refer_____)
  - Cover LH from Engine (Refer_____)
  - Fill engine oil.(Refer_____)

10.1.33. Gear Position Sensor

- The gear position sensor is located on the crankcase LH before FD sprocket
- Ensure Ignition switch and Engine stop switch are in OFF position.
- Gently locate gear position sensor **(a)** below FD sprocket.

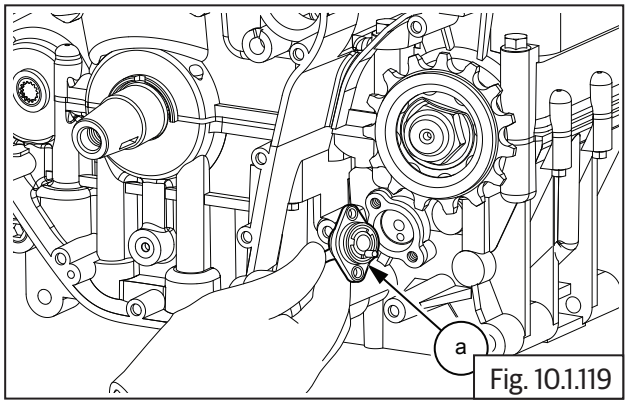

Fig. 10.1.119

- Gently locate gear position sensor wiring holder over gear position sensor and locate the bracket **(a)**.

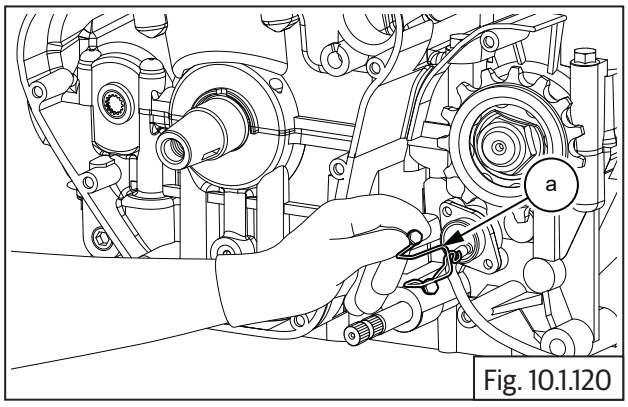

Fig. 10.1.120

- Insert and tighten 2 Nos. Hex head bolts **(M6) (a)** located below FD sprocket.

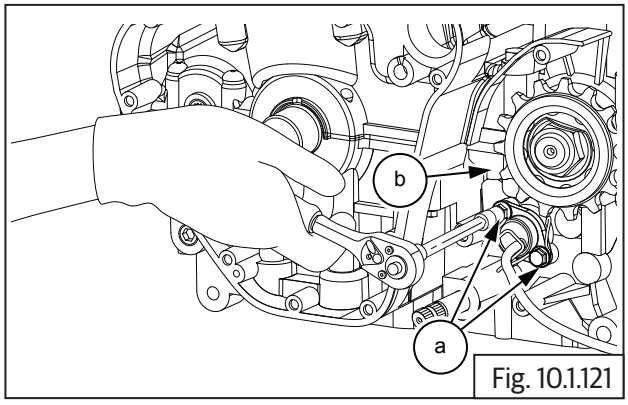

Fig. 10.1.121

	10 mm Allen socket With Ratchet
Torque	10 Nm/1.0 kgf-m

- Connect gear position sensor connector **(a)** to wiring harness connector located on rear side of engine **(b)**.
- Ensure connector is locked properly and wiring is routed correctly.

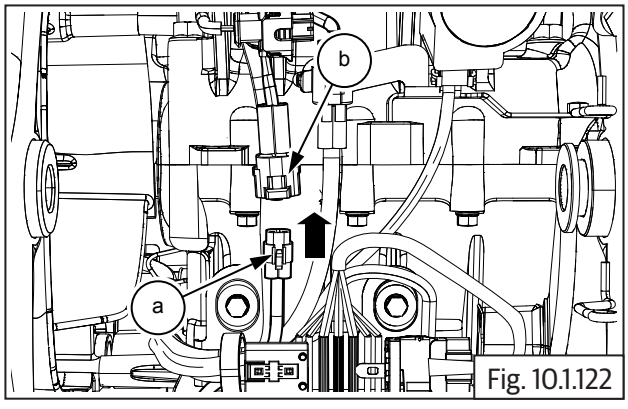

Fig. 10.1.122

- Assemble FD sprocket cover. (Refer_____)

10.1.34. Clutch Switch

- Locate and tighten 2 Nos of screws **(a)** into clutch lever.

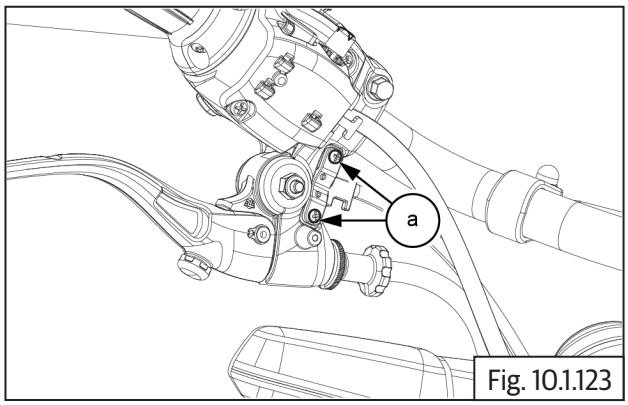

Fig. 10.1.123

	Screw Driver (+)

- Connect clutch switch connector **(a)**.

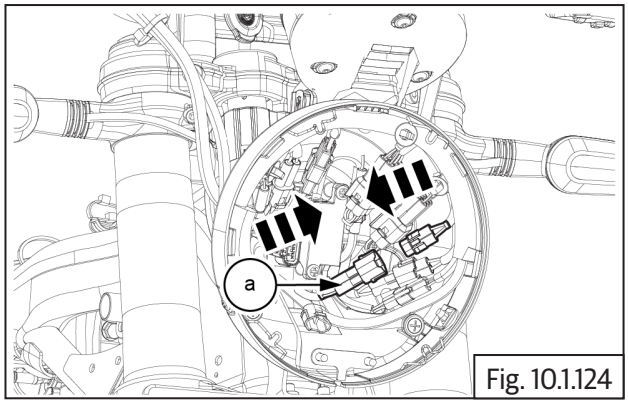

Fig. 10.1.124

- Assemble headlamp assembly. (Refer_____)

10.1.35. Side Stand Switch

⚠ CAUTION

Ensure the motorcycle is upright on a firm and flat surface.

- Locate a scissor jack under cradle frame and lift motorcycle such that the wheel is off the ground.

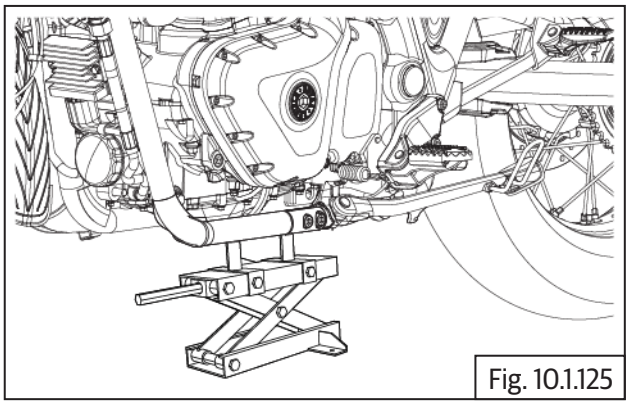
Fig. 10.1.125

- Install the side stand switch with harness **(a)** onto the frame.

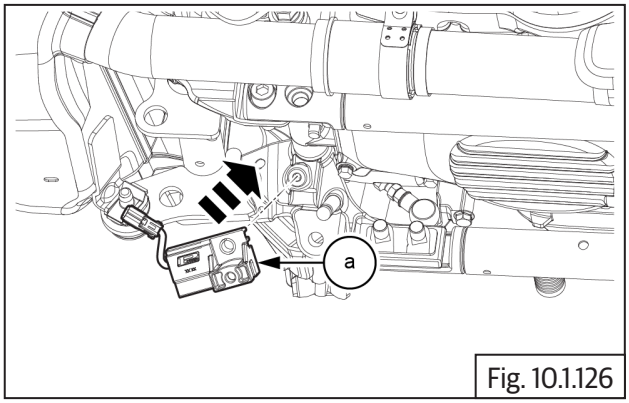

Fig. 10.1.126

- Tighten the hex head cap screw **(M6) (a)** to secure the side stand switch.

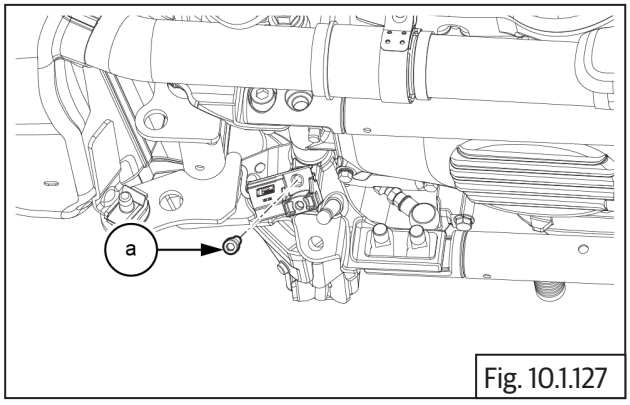

Fig. 10.1.127

	5 mm Socket with Ratchet
	4- 6 Nm / 0.4 - 0.6 kgf-m

- Attach the wire tag **(a)** to the side stand switch wiring harness.

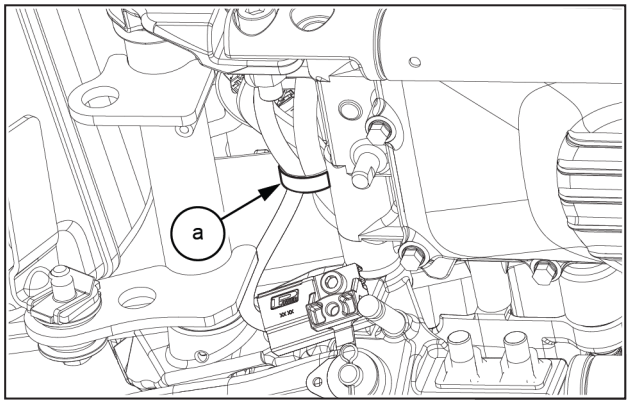

- Connect the side stand switch coupler **(a)**.

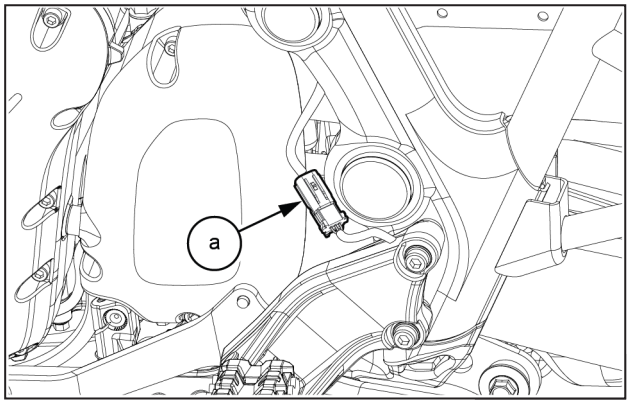

- Apply 2g of grease evenly on both sides of the slot on the side stand **(a)**.
- Install the side stand **(a)** onto the frame.

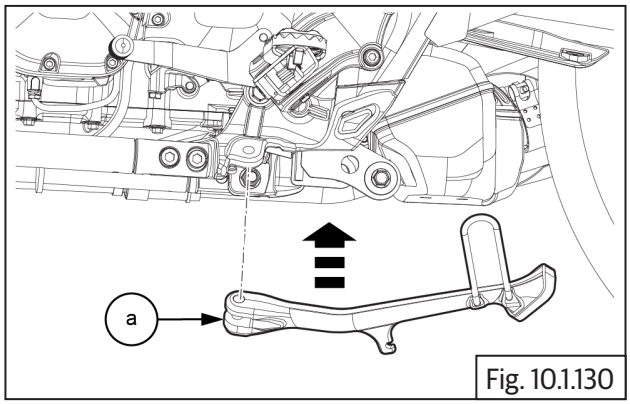

Fig. 10.1.130

	NLGI 2 / Mobil XHP 222

- Apply 1g of grease on the clevis pin **(a)**.
- Insert the clevis pin **(a)** and washer **(b)** into the side stand.

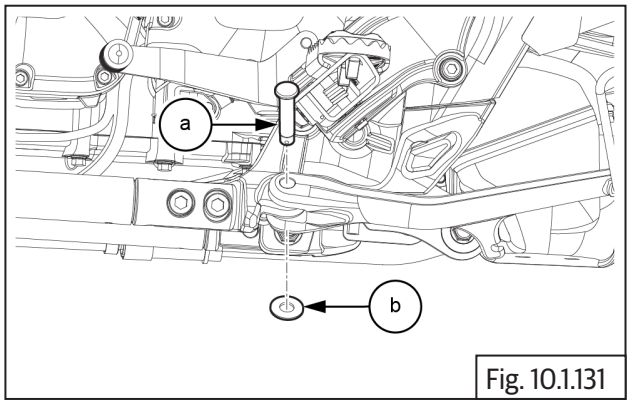

Fig. 10.1.131

	NLGI 2 / Mobil XHP 222

	Nose plier

- Secure the clevis pin with the split pin **(a)**.

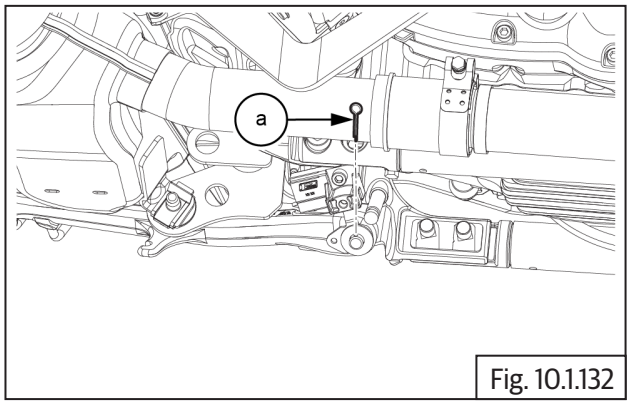

Fig. 10.1.132

	Nose plier

CAUTION

Be extremely careful when removing and installing the springs as the combined tension of the springs is very strong.

- Install the spring **(a)** onto the side stand.

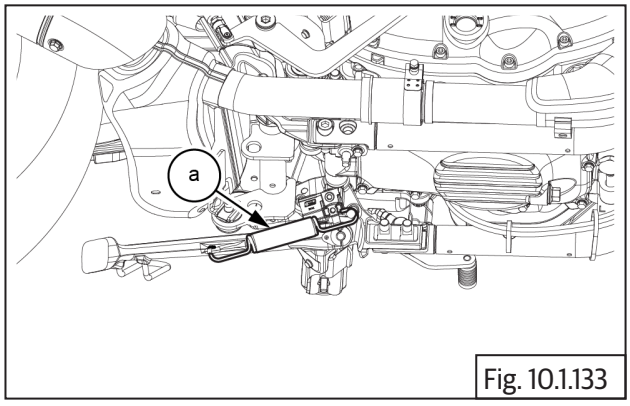

Fig. 10.1.133

	Phillips screwdriver

10.1.36. Starter Motor Solenoid

- Locate solenoid connectors below battery tray Ensure ignition off.
- Gently slide and locate solenoid coil **(a)** into battery tray bracket **(b)**.

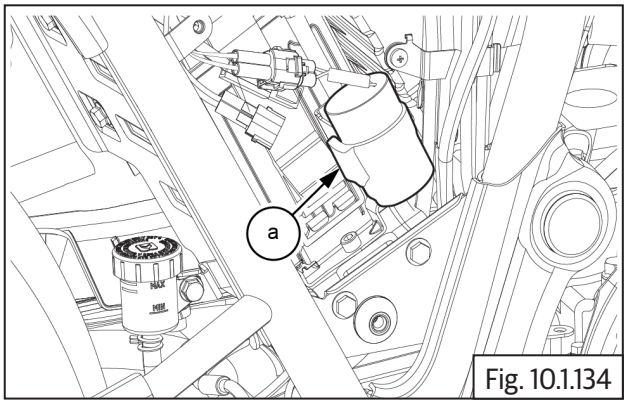

Fig. 10.1.134

- Connect starter solenoid connectors **(a)** into wiring harness.

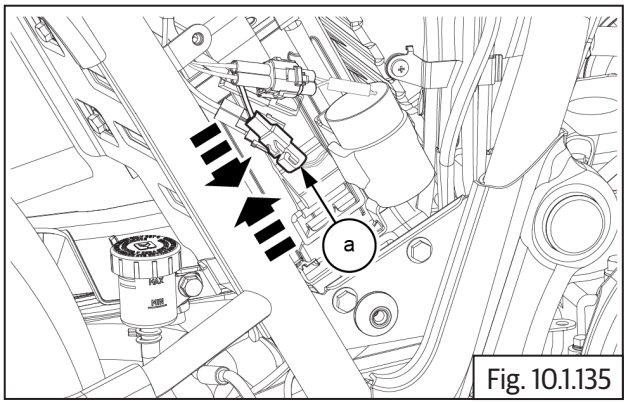

Fig. 10.1.135

- Connect starter solenoid connectors **(a)** into wiring harness.

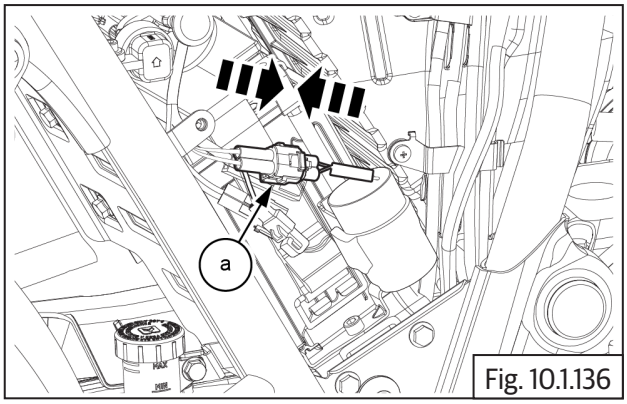

Fig. 10.1.136

- Assemble the following:
  - Rear mudguard in fill cover. (Refer_____)
  - Wheel speed sensor front and rear. (Refer_____)

10.1.37. Actuator

Actuator Tests

- The following actuators can be tested for their functionality using the diagnostic tool/ PC software.
  1. Fuel Pump
  2. Injector
  3. Ignition Coil
  4. O2 sensor heater
  5. Malfunction Indication Lamp (MIL)
  6. Idle Air Control Valve (IACV)
  7. Canister Purge Valve (CPV)
  8. Accessory Relay

Test Procedure

- **Entry Conditions**

  1. Actuator tests can be carried out when the ignition key and kill switch are ON and engine speed is 0.
  2. For IACV alone, engine speed can be greater than 0.
  3. For actuation of injector and ignition coil, gear should be in neutral. If not in neutral, clutch lever should be pressed.
  4. Errors associated to the corresponding actuator, if present, will inhibit the actuation.

- **Procedure**

  A. In EOL software

  1. Connect the tool with the diagnostic coupler in the vehicle and connect it with PC using the USB cable.
  2. Select the option "EOL" & select Actuator.
  3. Select the required actuator and press.

  B. In NACSII tool

  1. Connect the tool with the diagnostic coupler in the vehicle

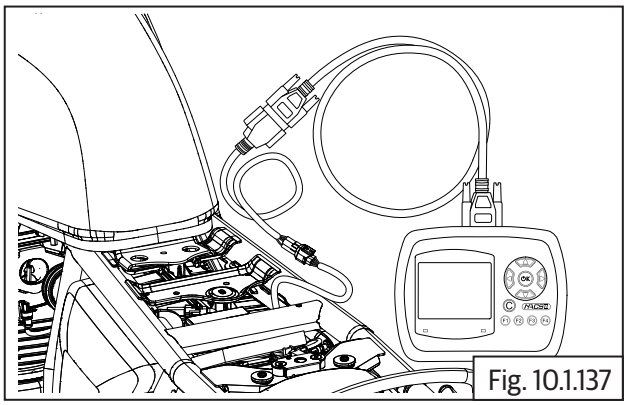

Fig. 10.1.137

  2. Select the vehicle model name and select Bosch Engine Management System
  3. Select the option Actuator
  4. Select the required actuator and press F3 to actuate

- **Method of verification**

1. For fuel pump, when actuated, an audible sound can be heard for 5 seconds .

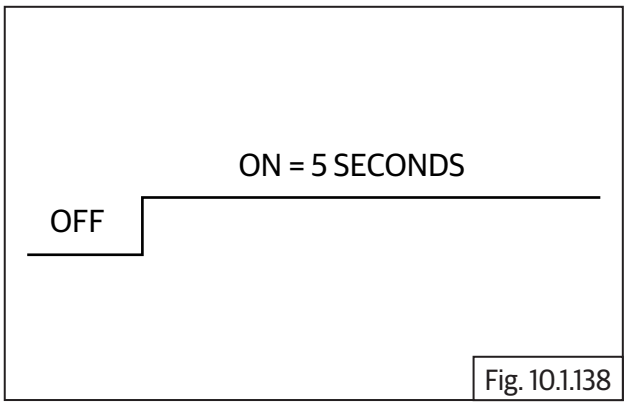

Fig. 10.1.138

2. Prior to actuation of injector, prime the fuel pump 3 times to build up sufficient pressure in fuel line. To ensure injectors are working properly, remove the throttle body from the intake manifold, connect all the injector couplers and actuate. When actuated, 3 pulses of fuel spray from the injector can be seen. Each injector can be actuated and checked individually

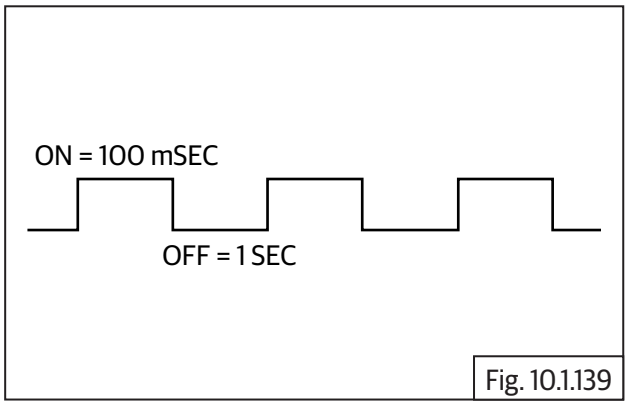

Fig. 10.1.139

3. Prior to the actuation of ignition coil, remove the suppressor cap and connect with an external spark plug and ground it to engine. Do not ground the ignition coil directly. When actuated, 3 sparks can be seen. Each ignition can be actuated and checked individually.

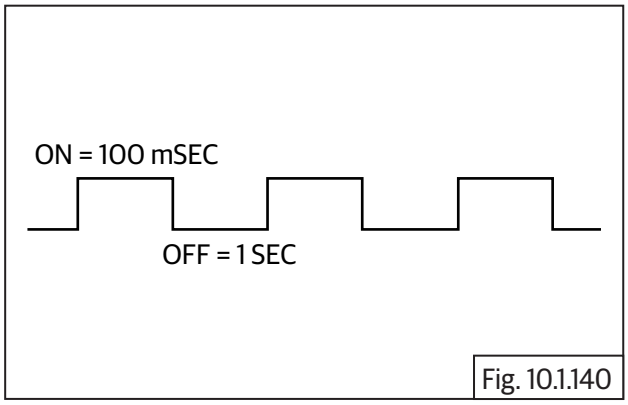

Fig. 10.1.140

4. To check O2 sensor heater, the sensor has to be removed from the exhaust pipe. When actuation is requested, the sensor will get heated up and this happens for 5 seconds.

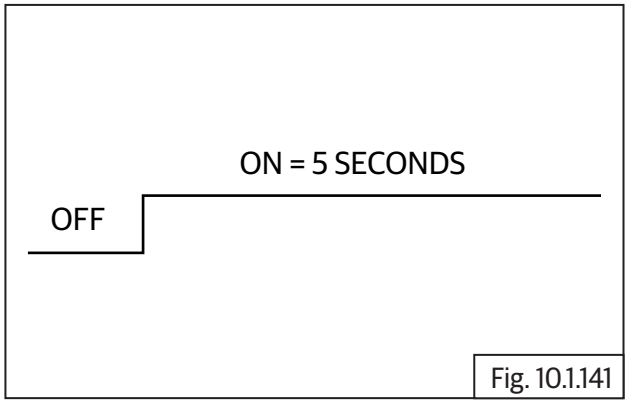

Fig. 10.1.141

5. When MIL is actuated, the bulb goes ON & OFF for 5 times.

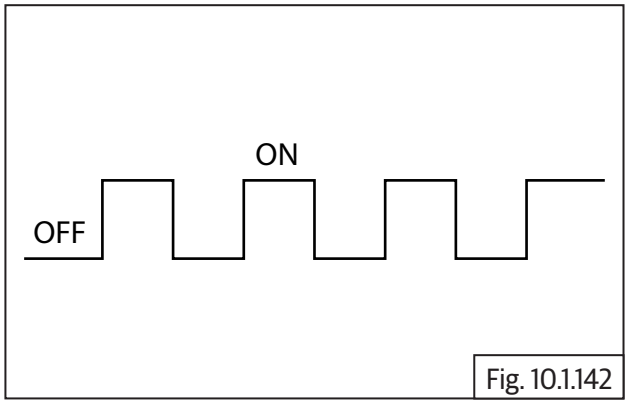

Fig. 10.1.142

6. Start and idle the engine before actuating IACV. If actuation command is given, one can observe the engine rpm rising up & falling down the target idle speed. Once actuation is completed, it settles back to target idle speed.

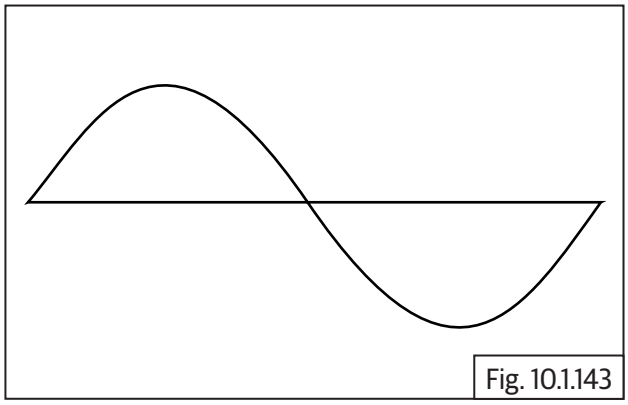
Fig. 10.1.143

7. When CPV is actuated, a pulsating sound can be observed. If not, the canister purge valve has to be manually touched to feel actuation.

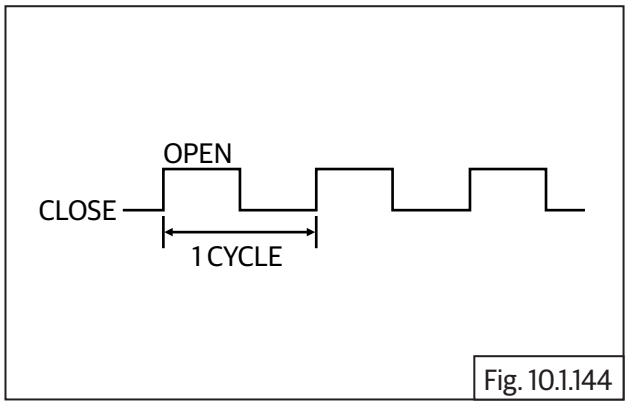

Fig. 10.1.144

8. Accessory relay gets actuated for 5 cycles.

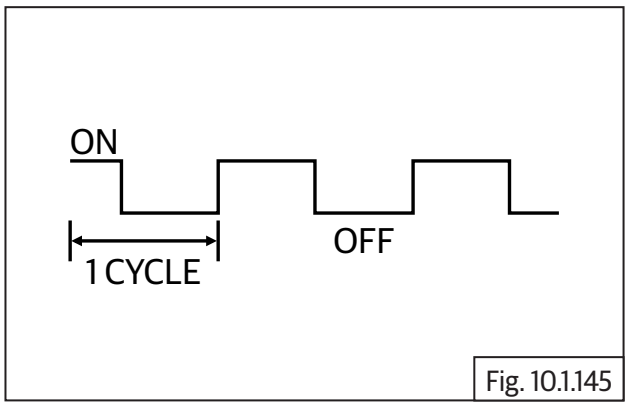

Fig. 10.1.145

EMS Adaptation procedure

10.2. EMS Adaptation procedure

The following procedure to be followed when if any change in the EMS sensors or fuel type

Step 1 - Check for Engine Oil Temperature (EOT) at start is less than **40˚C**.

Step 2 - Start and allow the engine to idle and leave it undisturbed till the Engine Oil Temperature reaches **115˚C**.(Time required for the EOT to reach **115˚C** is **30 minutes** approximately).

Step 3 - Once Engine Oil Temperature reaches **115˚C**, turn "**OFF**" the ignition key and **DO NOT** turn it "**ON**" for 120 seconds.

ELECTRICAL SYSTEM

CONTENTS **PAGE**

11. Electrical System..... 680

Dismantling..... 680

11.1 Battery Terminals 680
11.2 Utility Box 680
11.3 Battery Tray 680
11.4 Headlamp Reflector from Housing 680
11.5 USB C type adaptor 680
11.6 Direction Trafficators from Headlamp Holder 680
11.7 Cluster Assembly 680
11.8 Ignition Switch Cum Steering Lock 680
11.9 Horn Dismantling 680
11.10 Tail Lamp 680
11.11 Direction Trafficators - Rear 680
11.12 License plate illuminator 680
11.13 Starter Solenoid 680
11.14 RR Unit 680
11.15 Complete Wiring Harness Removal 680

Inspection 680

Assembly 680

11.16 Complete Wiring Harness Assembly 680
11.17 RR Unit 680
11.18 Starter Solenoid 680
11.19 Battery Terminals 680
11.20 Trafficator 680
11.21 Direction Trafficators - Rear 680
11.22 Tail Lamp 680
11.23 Horn Assembly 680
11.24 Ignition Switch Cum Steering Lock 680
11.25 Cluster Assembly 680
11.26 Direction Trafficators into Headlamp Holder 680
11.27 USB C type adaptor 680
11.28 Headlamp Reflector into Housing 680
11.29 Battery Tray 680
11.30 Utility Box 680

Electrical Schematics 680

Lighting System 680
ABS System 680
Accessory Circuit 680
Charging System 680
Horn System 680
Ignition System 680
Signaling System 680
Starting System 680

11. Electrical System

Dismantling

11.1 Battery Terminals

- Remove the following parts:
  - Side panel RH (Refer-------).
  - Rider seat (Refer-------).
  - Side panel LH (Refer-------).
- Ensure Ignition and stop switch are in OFF position before disconnecting battery cables.
- Refer general information (Refer-------) for battery connection and disconnection procedure.

NOTE
• *If battery lead is difficult to disconnect due to rust or corrosion of battery terminals, pour recommended battery terminal cleaning solution on terminals and then try to disconnect.*

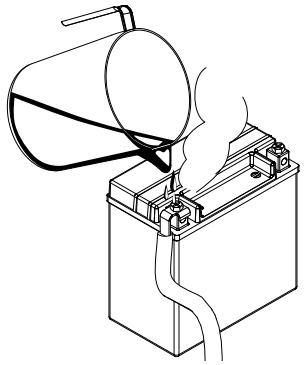

Fig. 11.5.1

- Disconnect battery negative (-) terminal bolt **(a)**.

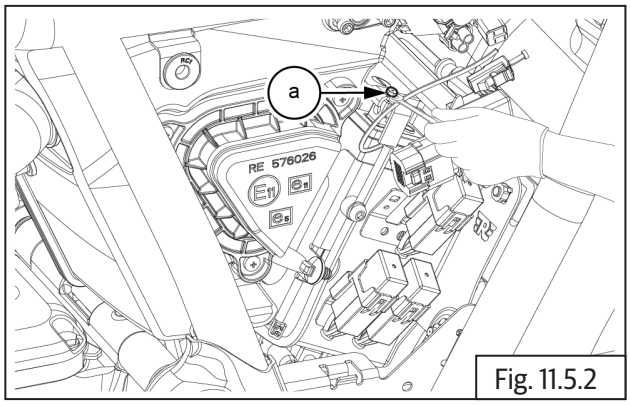

Fig. 11.5.2

	10 mm Double end spanner Phillips screw driver (+)

11.2 Utility Box

- Remove the following parts:
  - Side panel RH (Refer-------).
- Loosen and remove 3 Nos. Hex head bolts **(M6) (a)** from tool holder .

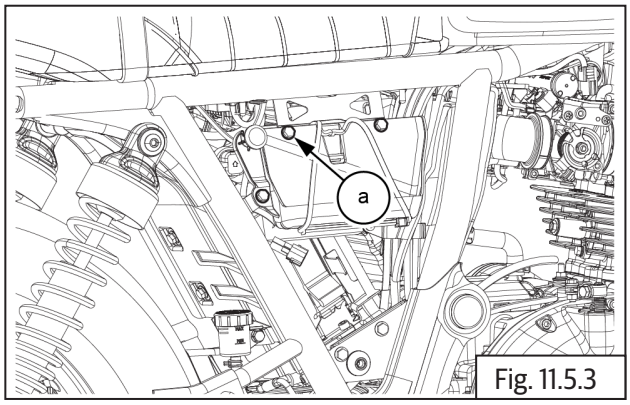

Fig. 11.5.3

	10 mm Socket and Ratchet

- Remove the tool holder **(b)** from vehicle.

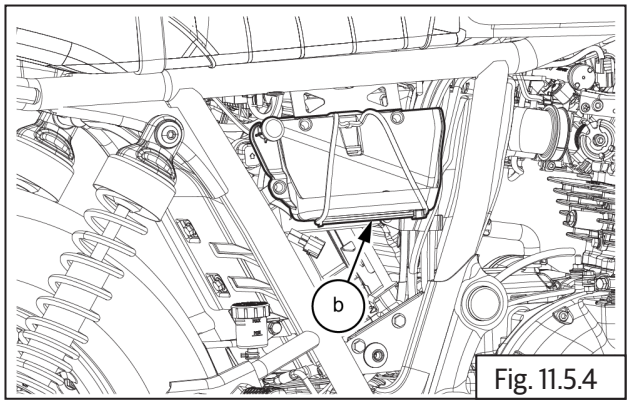

Fig. 11.5.4

- Pull battery strap (belt) **(a)** downwards and release strap lock from battery strap bracket.

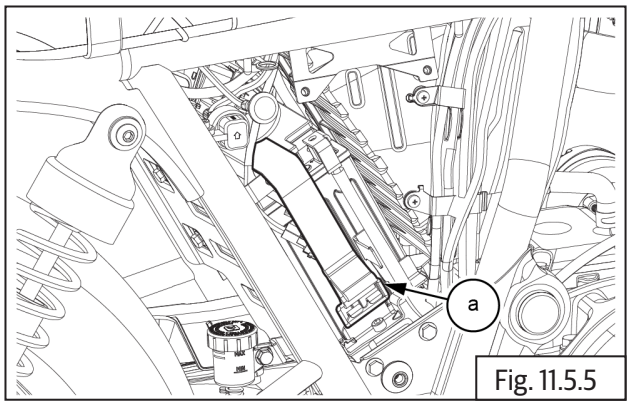

Fig. 11.5.5

- Disconnect battery positive (+) terminal **(a)** from battery .

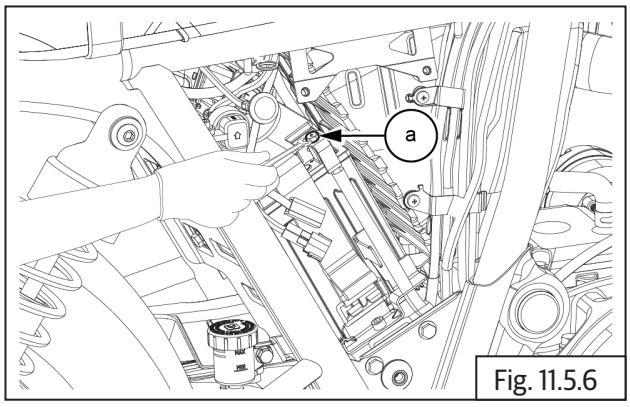

Fig. 11.5.6

	10 mm Double end spanner

- Loosen and remove Hex flanged head screw **(M6) (a)** from battery strap bracket.

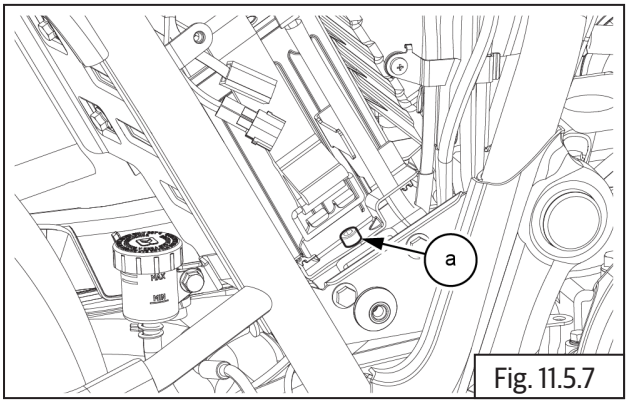

Fig. 11.5.7

	5 mm Allen socket with ratchet

- Remove battery bracket **(a)** from tray.

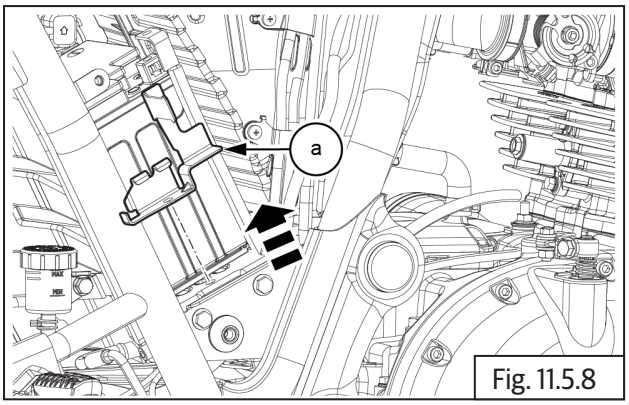

Fig. 11.5.8

- Remove battery **(a)** from tray.

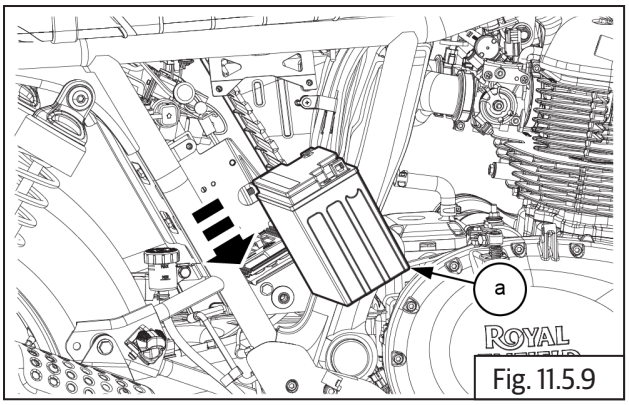

Fig. 11.5.9

11.3 Battery Tray

- Remove the following parts:
  - Rear wheel (Refer-------).
  - Engine control unit (ECU) (Refer-------).
  - Rear mudguard infill cover(Refer-------).
  - Starter solenoid from battery tray (Refer-------).
- Loosen and remove the 2 Nos. Hex head collar bolt **(M6) (a)** from frame RH.

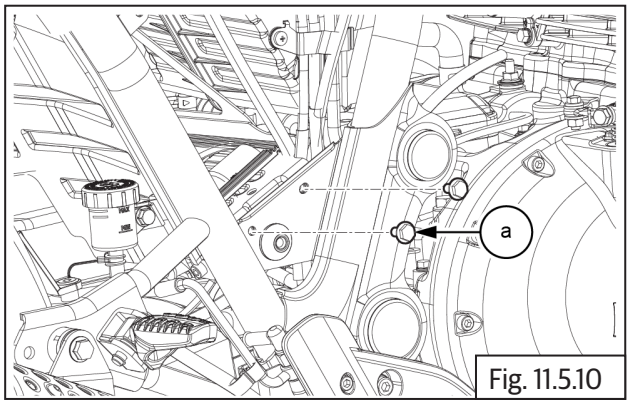

Fig. 11.5.10

	10 mm Socket and Ratchet

- Ensure wiring harness routing is separated from battery bracket and remove battery tray **(a)** from frame.

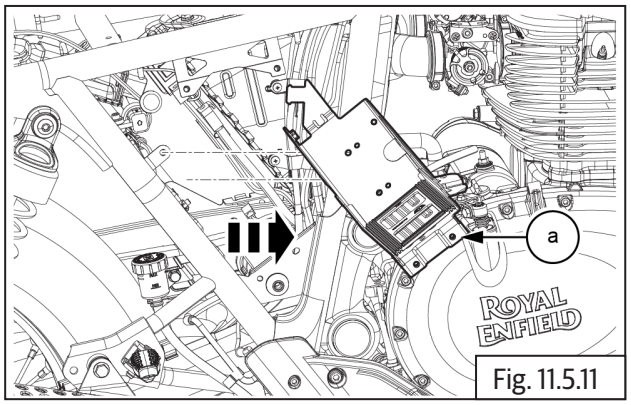

Fig. 11.5.11

11.4 Headlamp Reflector from Housing

NOTE
• *Ensure ignition switch and stop switch in off condition*

⚠ CAUTION
Support the Headlamp assembly carefully.

- Loosen and remove 2 Nos. Phillips screw on LH **(b)** and RH **(a)** of headlamp.

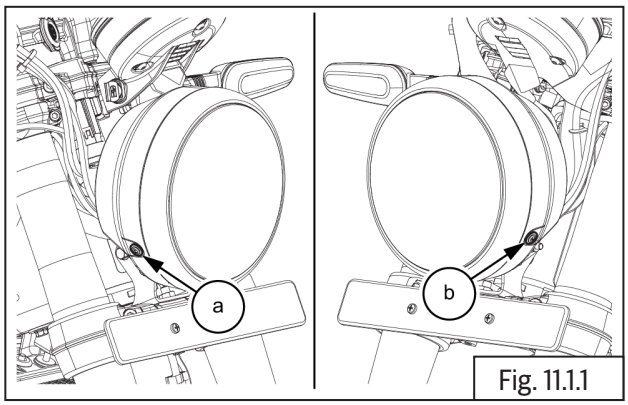

Fig. 11.1.1

	Phillips screw driver (+)

- Disconnect the connector **(a)** from Headlamp.

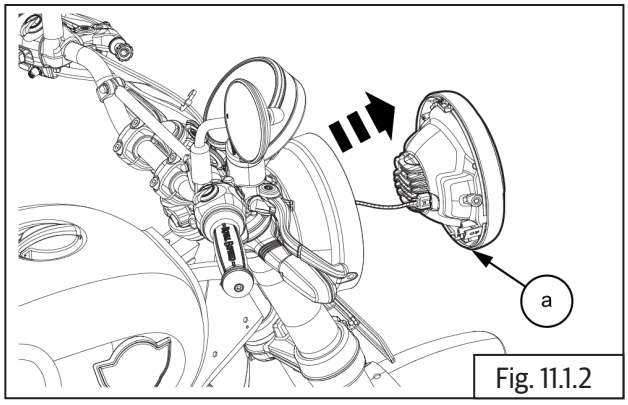

Fig. 11.1.2

⚠ WARNING
The headlamp and bulb can be extremely hot. Do not remove while headlamp/bulb are hot.

- Gently remove headlamp **(a)** from vehicle.

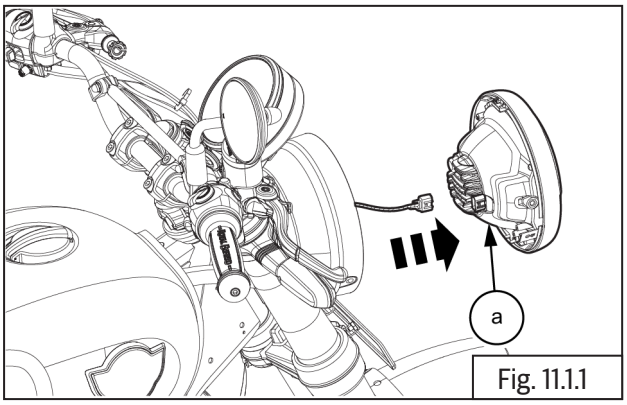

Fig. 11.1.1

- Loosen and remove 2 Nos. Phillips screw **(a)** from cowel.

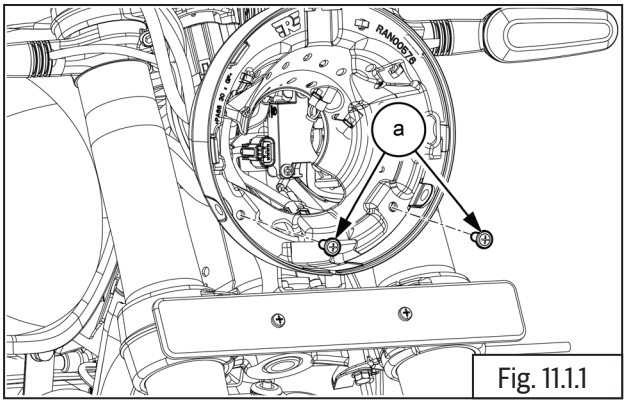

Fig. 11.1.1

	Phillips screw driver (+)

- Remove cowel cover **(a)** from vehicle.

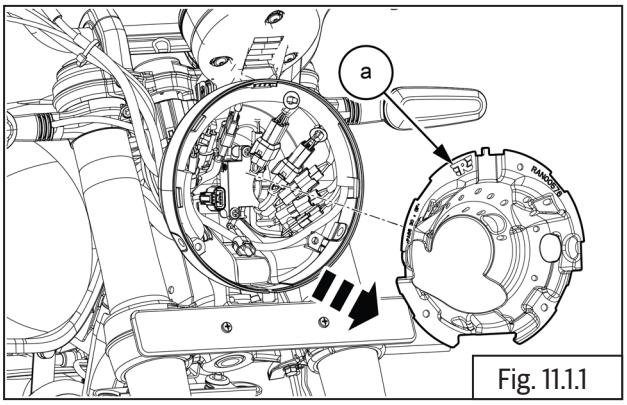

Fig. 11.1.1

- Loosen and remove 2 Nos. bolts **(a)** from cowel clamp **(b)**.

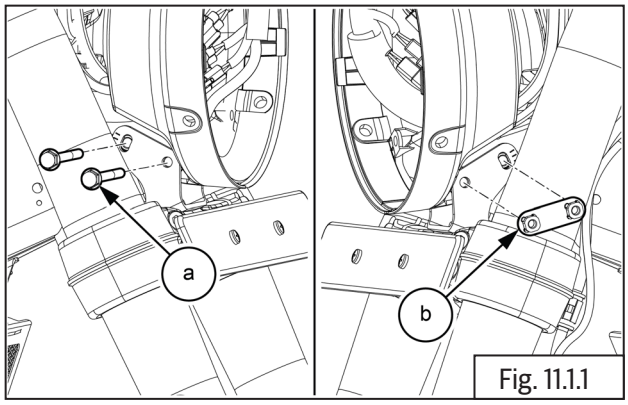

Fig. 11.1.1

	10 mm Socket wit ratchet/ T-rod

- Remove cowel **(a)** from vehicle.

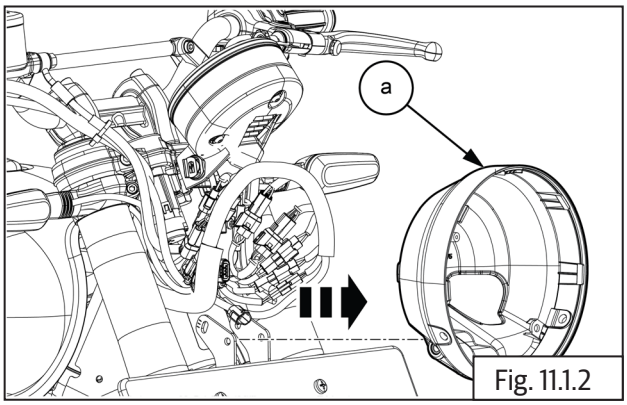

Fig. 11.1.2

- Loosen and remove 2 Nos allen key bolt **(a)** and nut **(b)** from T- stem.

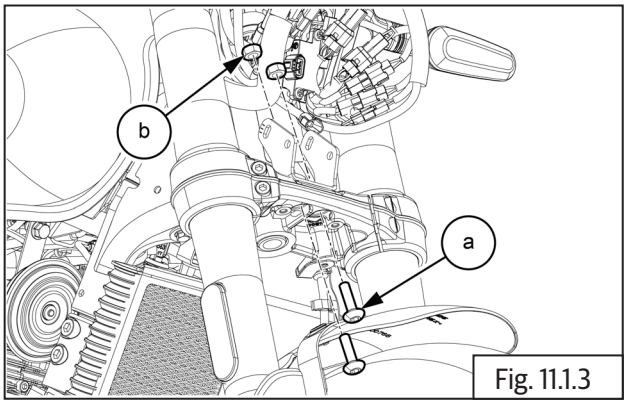

Fig. 11.1.3

	6mm Allen Socket with ratchet, 10 mm nut

11.5 USB C type adaptor

- Loosen and remove nut **(b)** and washer **(a)** from USB mount.

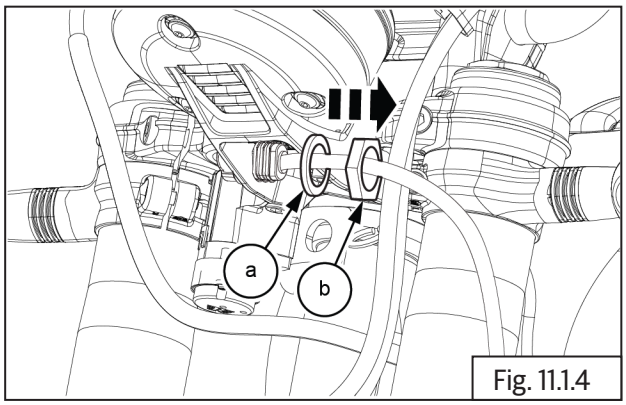

Fig. 11.1.4

	22 mm Double end spanner

- Remove the charging port **(a)** from the vehicle.

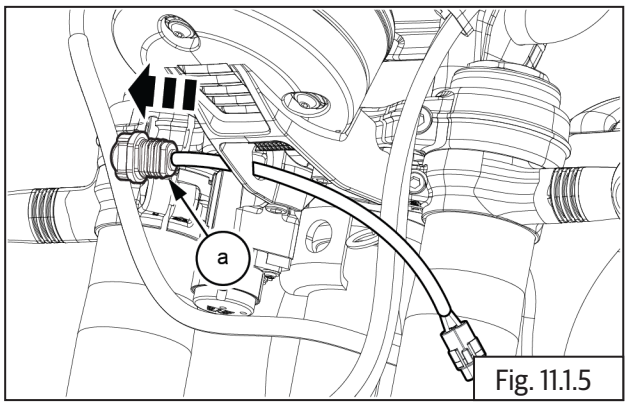

Fig. 11.1.5

11.6 Direction Trafficators from Head-lamp Holder

- Loosen and remove Hex nut **(M12) (a)** from RH direction trafficator.

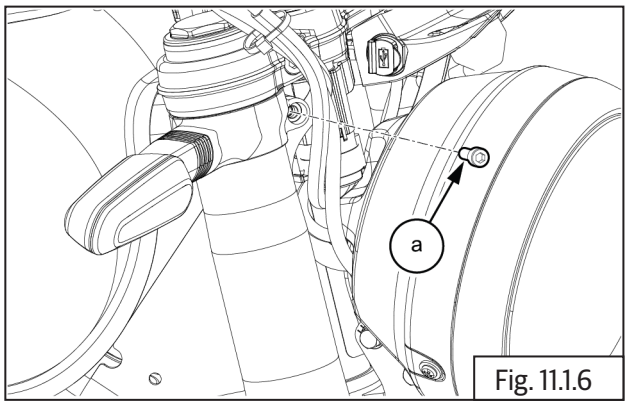

Fig. 11.1.6

	5 mm Allen socket with ratchet

- Loosen and remove Hex nut **(M12) (a)** from RH direction trafficator.

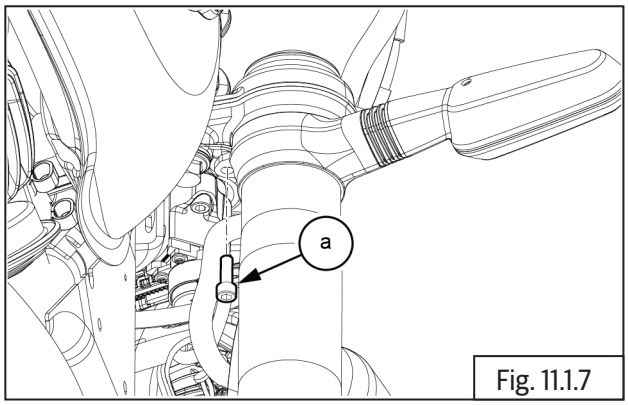

Fig. 11.1.7

	5 mm Allen socket with ratchet

- Disconnect the trafficator connector **(a)**.

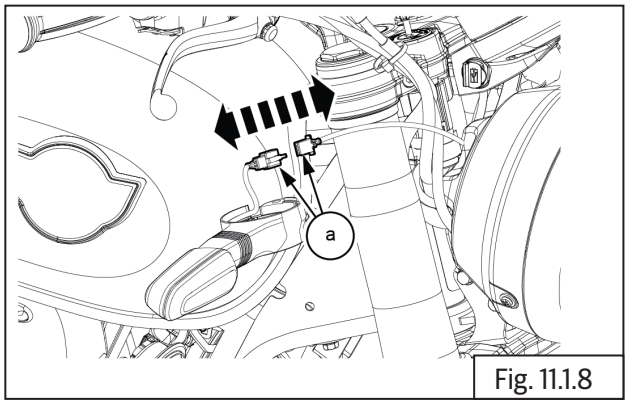

Fig. 11.1.8

- Remove the RH trafficator **(a)** from fork.

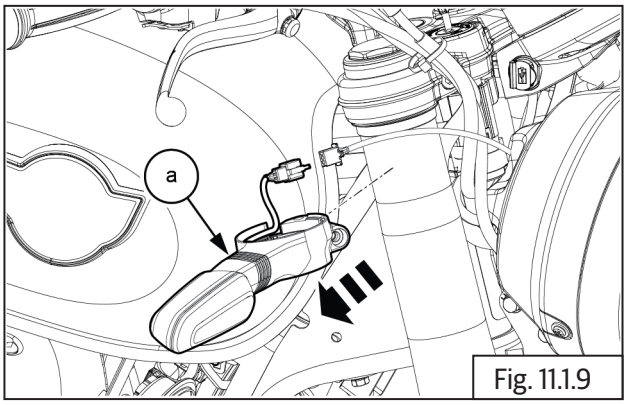

Fig. 11.1.9

- Similarly remove LH direction trafficator.

11.7 Cluster Assembly

- Disconnect the cluster connector **(a)**.

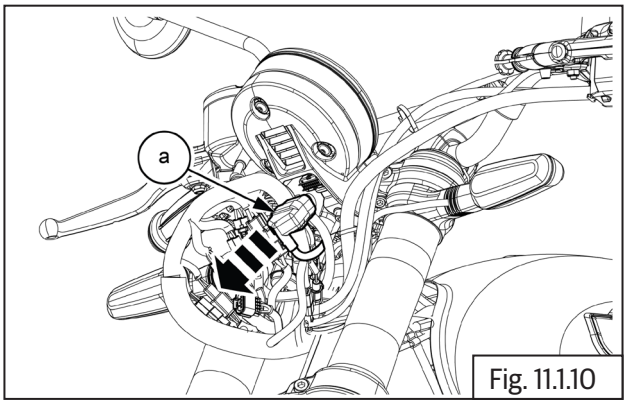

Fig. 11.1.10

- Loosen and remove the 3Nos allen bolt **(a)**, compression limiter **(b)** and grommet **(c).**

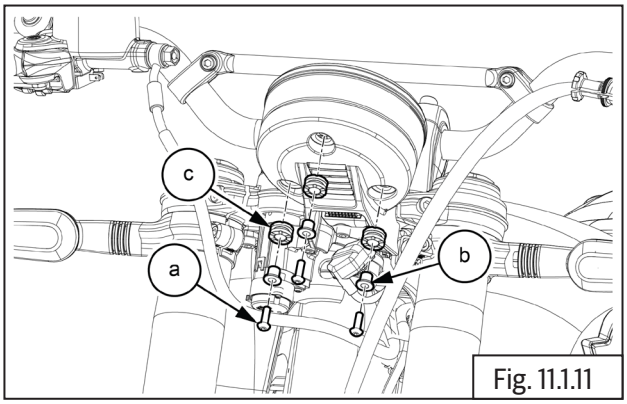

Fig. 11.1.11

	3 mm Allen socket with Ratchet

- Gently remove cluster **(a)**.

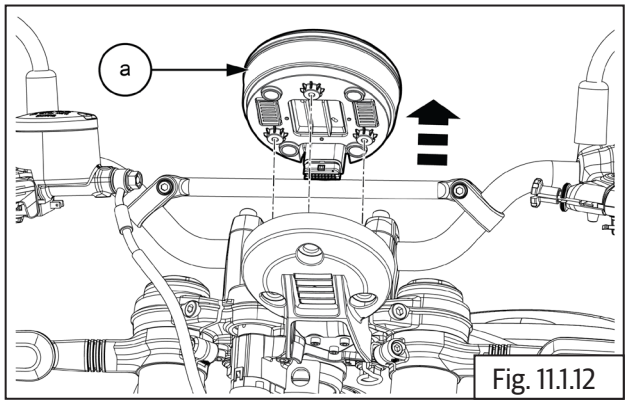

Fig. 11.1.12

- Remove 3 Nos. Hex socket head bolts **(M6) (a)** located below cluster bracket.

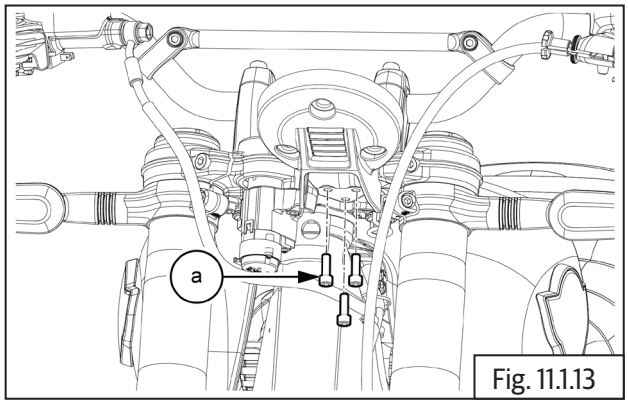

Fig. 11.1.13

	5 mm Allen socket with Ratchet

- Remove the cluster bracket **(a)** from vehicle.

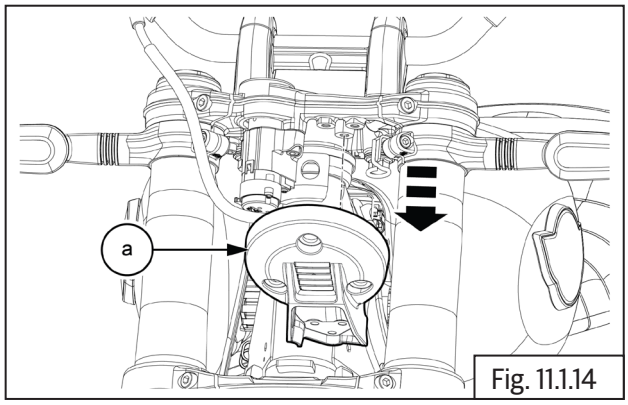

Fig. 11.1.14

11.8 Ignition Switch Cum Steering Lock

- Remove the fuel tank. (Refer-------)
- Remove head lamp .(Refer-------)
- Disconnect ignition switch coupler **(a)**

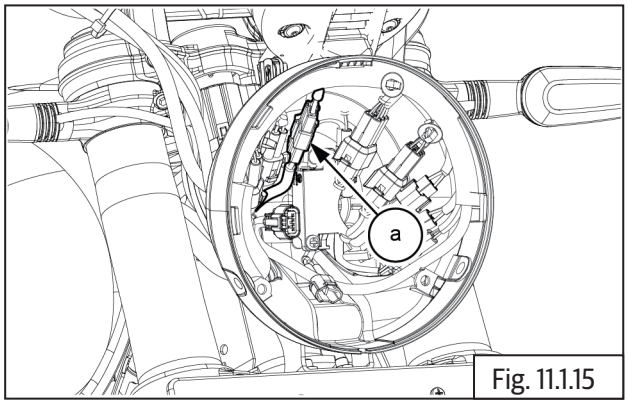

Fig. 11.1.15

- Remove 2 Nos. Hex socket head bolts **(M6) (a)** located below cluster bracket on LH and RH.

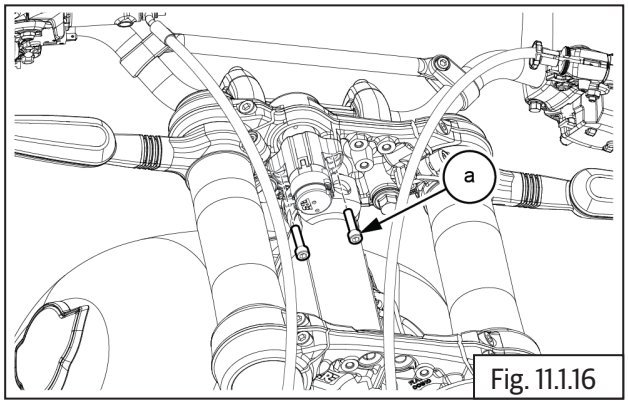

Fig. 11.1.16

	5 mm Allen socket with Ratchet

- Remove the ignition key set assembly **(a)** .

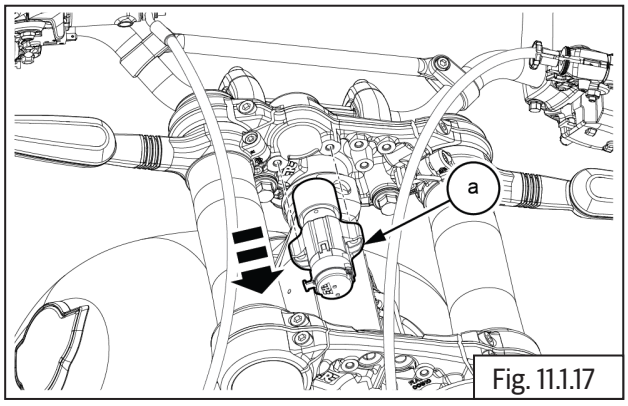

Fig. 11.1.17

11.9 Horn Dismantling

- Disconnect the RH and LH horn connectors **(a).**

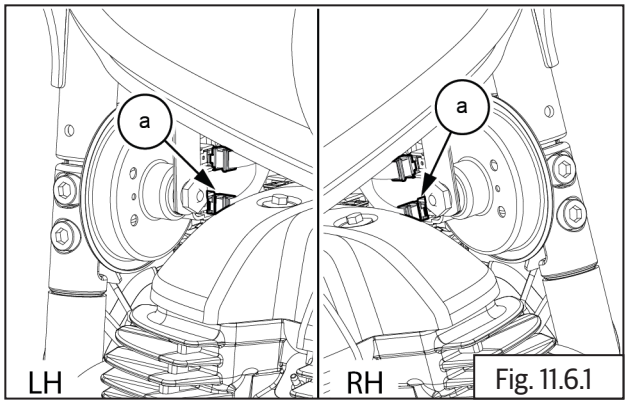

Fig. 11.6.1

	12 mm Socket with Ratchet 12 mm Ring spanner

- Loosen and remove Hex flange bolt **(a)** and nut **(M8) (b)** to remove LH and RH horn bracket.

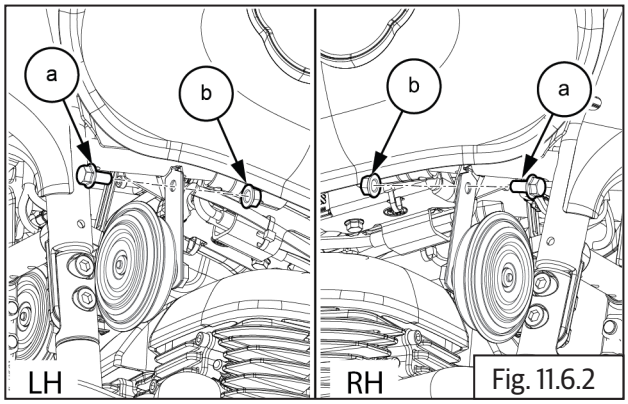

Fig. 11.6.2

	12 mm Socket with Ratchet 12 mm Ring spanner

- Remove the horn **(a)** from the vehicle.

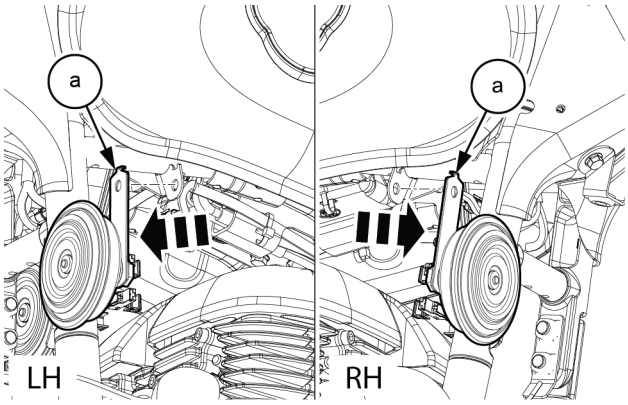

11.10 Tail Lamp Dismantling

NOTE
• *Handle tail lamp assembly with care. Avoid over tightening of lens screws.*

- Disconnect the rear master coupler.

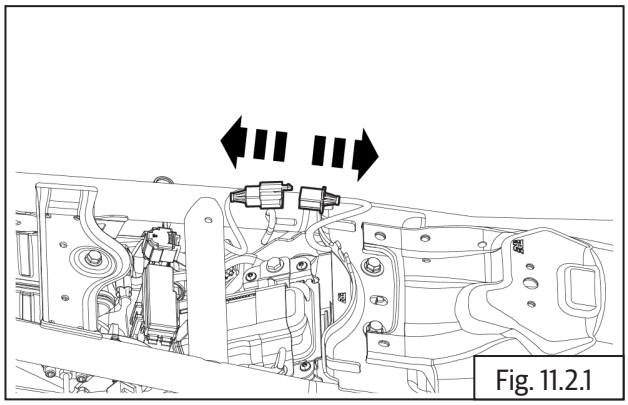

Fig. 11.2.1

- Loosen and remove 2 Nos. screws **(a)** from tail lamp lens.

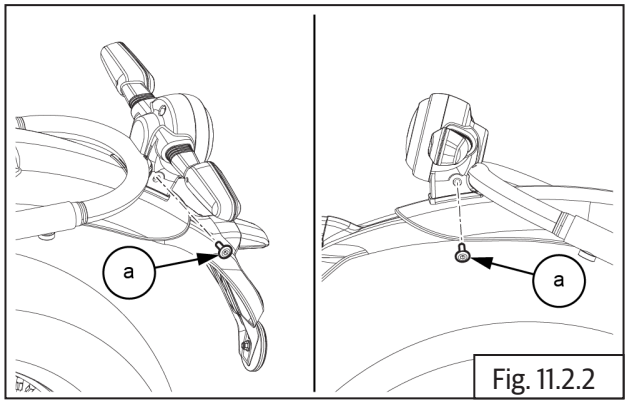

Fig. 11.2.2

	5 mm Allen socket with ratchet

- Remove the tail lamp assembly **(a)** from the vehicle.

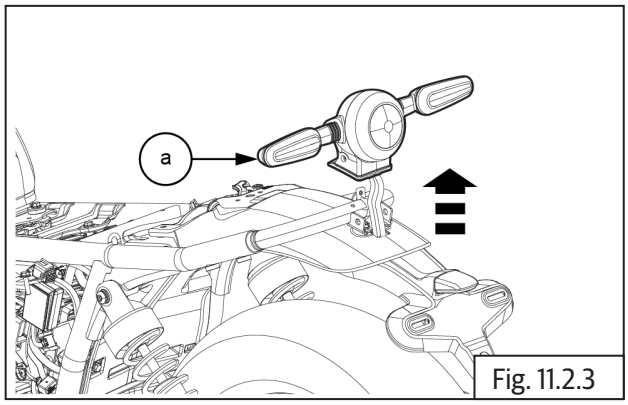

Fig. 11.2.3

- Loosen and remove 2 Nos nut M6 **(a)** from the tail lamp bracket.

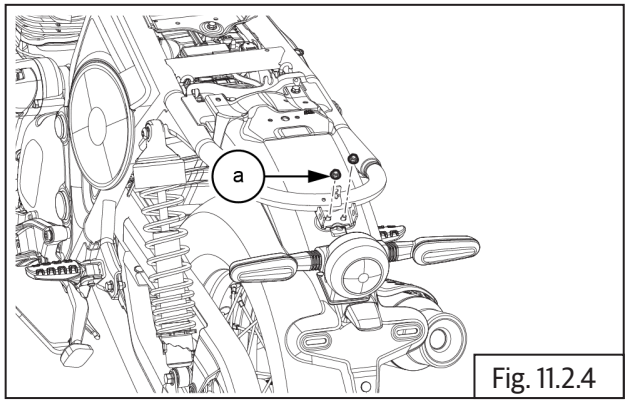

Fig. 11.2.4

	10 mm Ring Spanner

- Loosen and remove 2 Nos hex flanged bolt **(a)** from rear mudguard.

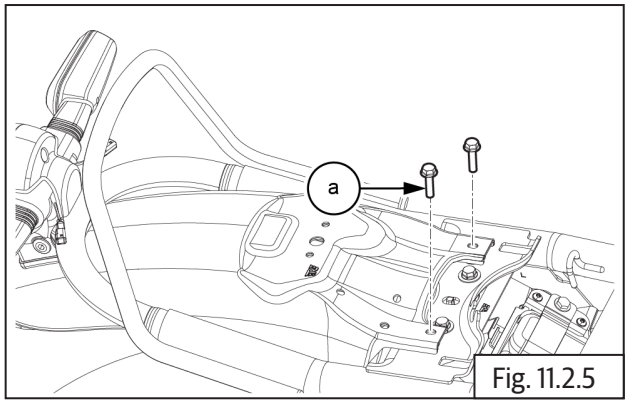

Fig. 11.2.5

	10 mm Ring Spanner

- Remove the rear mudguard **(a)** from the vehicle.

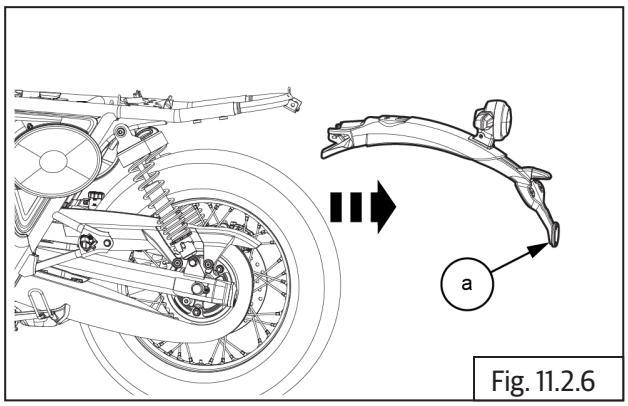

Fig. 11.2.6

- Loosen and remove 2 Nos. screw **(a)** from tail lamp lens.

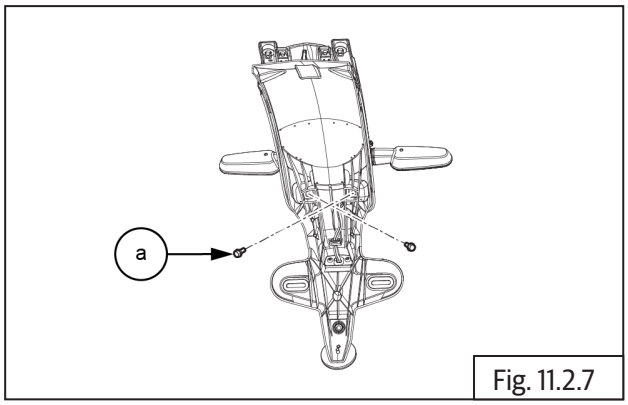

Fig. 11.2.7

	10 mm Ring Spanner

- Remove the mudflap **(a)** from the rear mudguard.

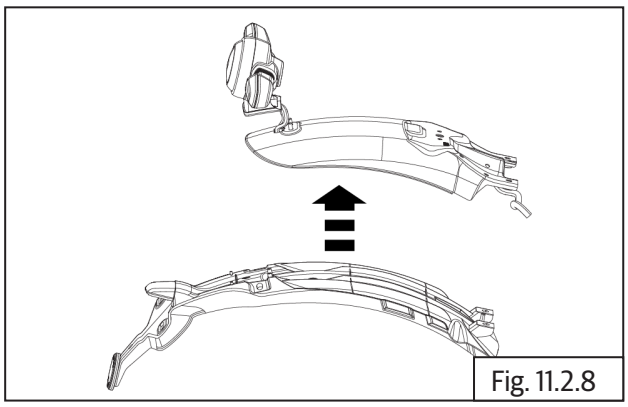
Fig. 11.2.8

- Disconnect the license plate lamp connector from the rear mudguard wiring harness.

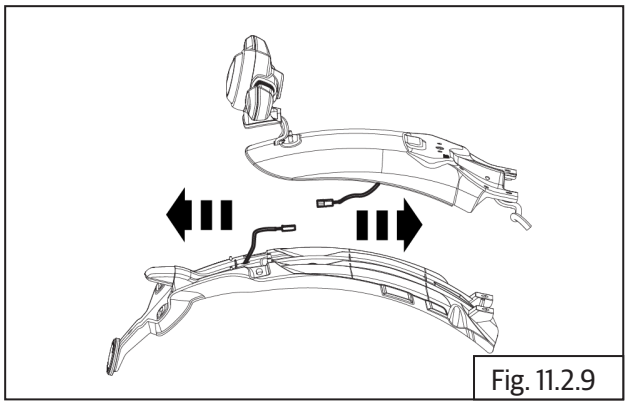
Fig. 11.2.9

- Disconnect the tail lamp connector **(a)** from the rear mudguard wiring harness.

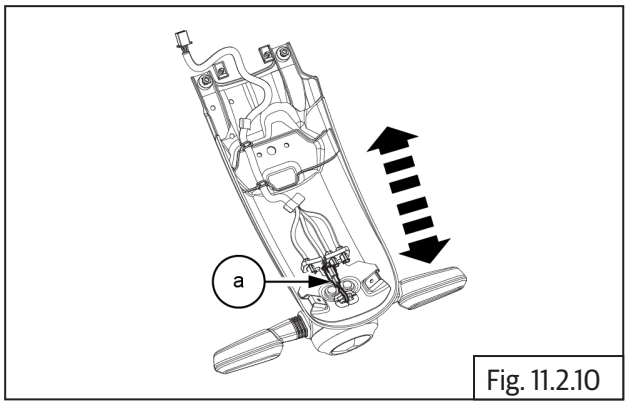

Fig. 11.2.10

- Remove the stud plate **(a)** from the mudguard.

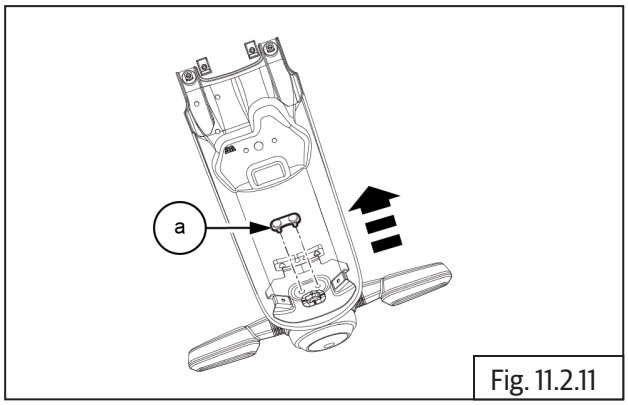

Fig. 11.2.11

- Remove the tail lamp assembly **(a)** from the rear mudguard.

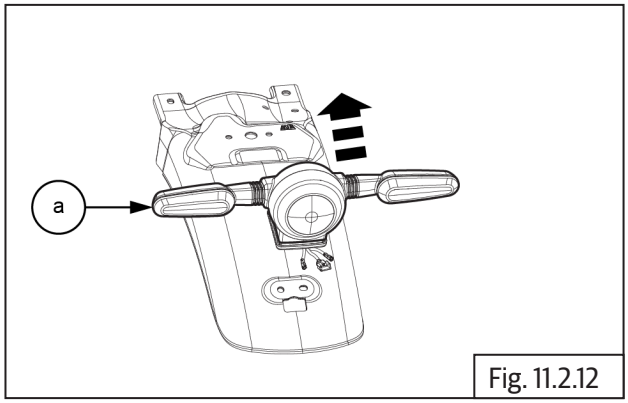

Fig. 11.2.12

- Remove the housing rubber **(a)** from tail lamp housing.

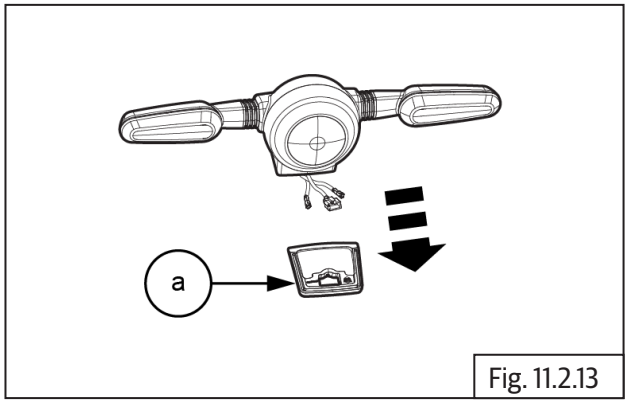

Fig. 11.2.13

- Loosen and remove 4 Nos screw **(a)** from the tail lamp housing.

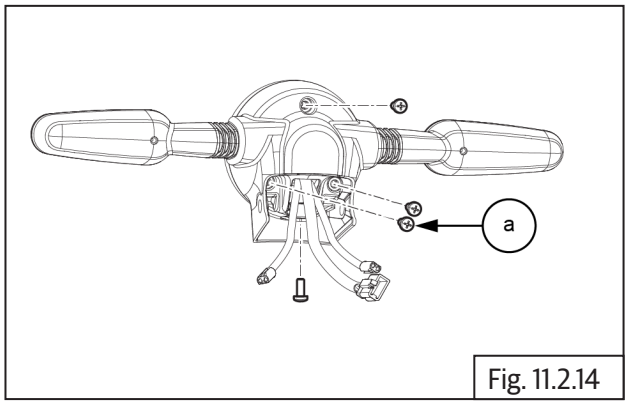

Fig. 11.2.14

	Phillips screw driver (+)

- Remove the tail lamp cover **(a)** from the Tail lamp housing.

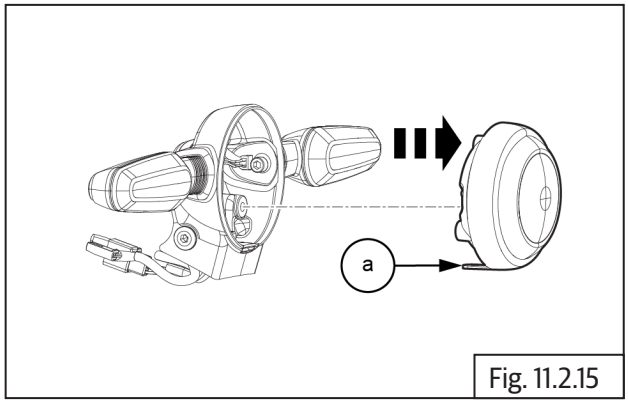

Fig. 11.2.15

11.11 Direction Trafficators - Rear

- Remove rear number plate bracket (Refer-------).
- Support and remove tail lamp housing **(a)** from the frame **(b)**.

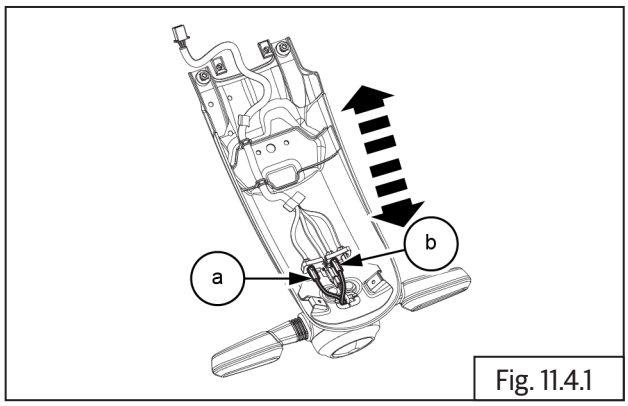

Fig. 11.4.1

- Support and remove tail lamp housing **(a)** from the frame.

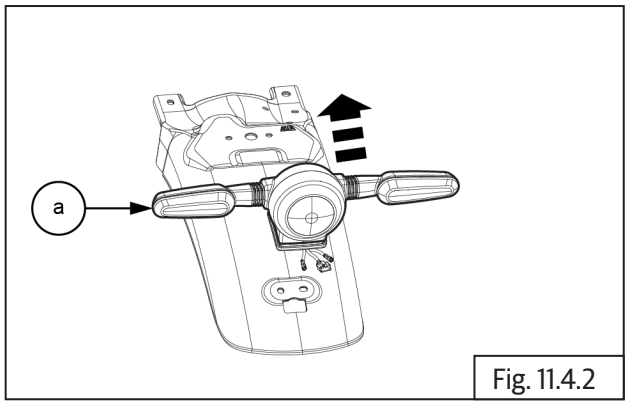

Fig. 11.4.2

- Remove the 3 Nos screws **(a)** from tail lamp cover.

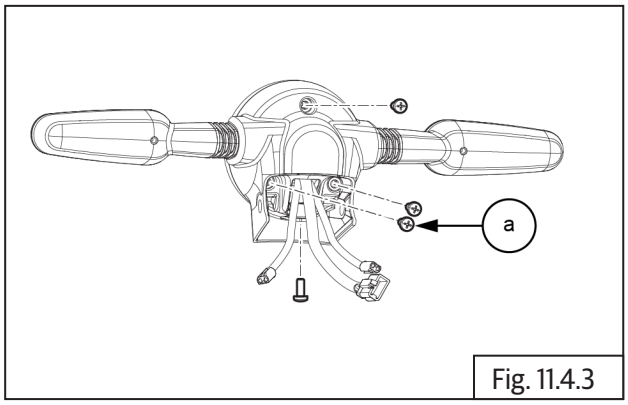

Fig. 11.4.3

	Phillips screw driver (+)

- Remove the cover **(a)** from tail lamp housing

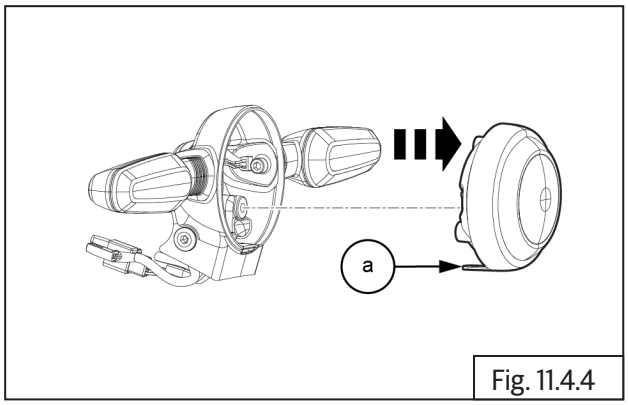

Fig. 11.4.4

- Remove the button heat bolt **(M6) (a)** from tail lamp housing.

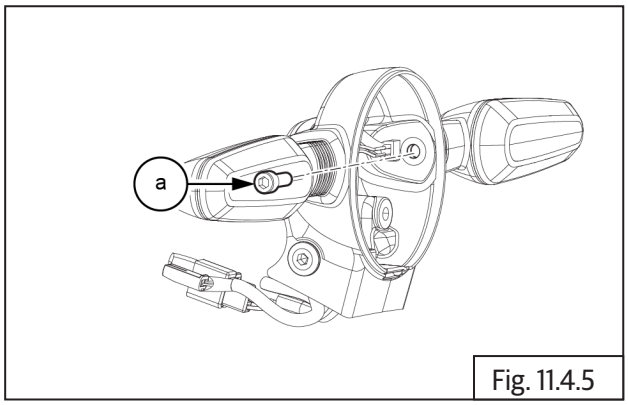

Fig. 11.4.5

	5 mm Allen socket with ratchet

- Detach the trafficator **(a)** from tail lamp housing.

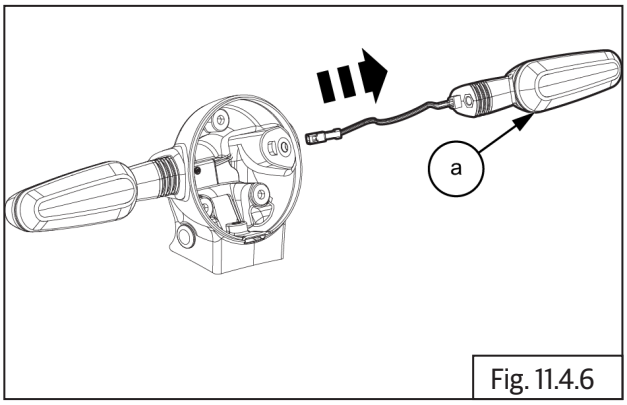

Fig. 11.4.6

- Repeat the above same steps to remove other side trafficator.

11.12 License plate illuminator

- Loosen and remove 2 Nos Bolt **(a)** from License plate illuminator.

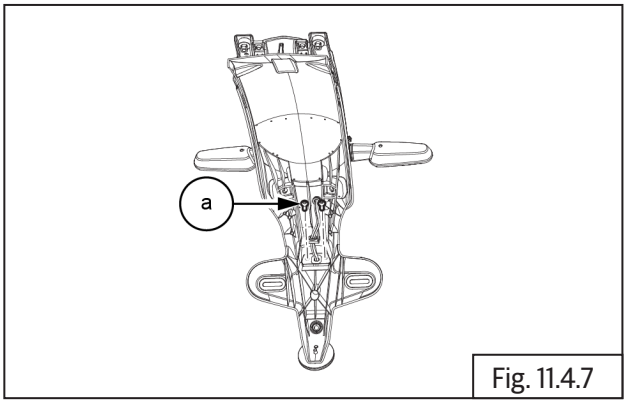

Fig. 11.4.7

	4 mm Allen socket with ratchet

- Remove the license plate illuminator **(a)** from mudguard.

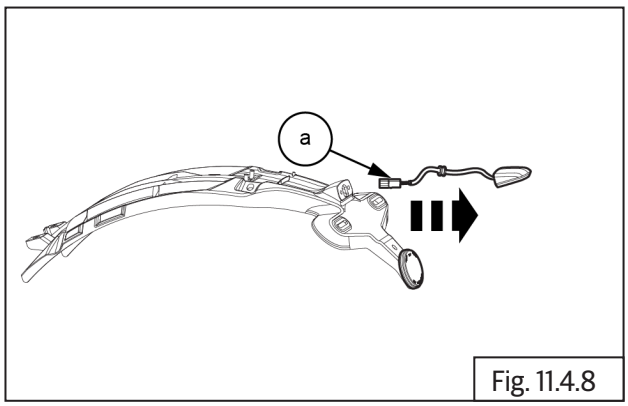

Fig. 11.4.8

11.13 Starter Solenoid

- Remove the following parts:
  - Remove rear wheel (Refer-------).
  - Remove rear mudguard in fill cover (Refer-------).
  - Remove battery positive (+) terminal (Refer-------).
- Disconnect starter solenoid connectors **(a)**. Solenoid connectors are located below battery tray.

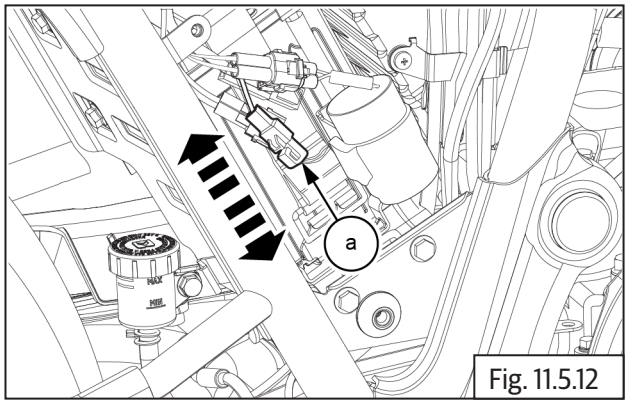

Fig. 11.5.12

- Disconnect starter solenoid connectors **(a)** from wiring harness located below battery tray.

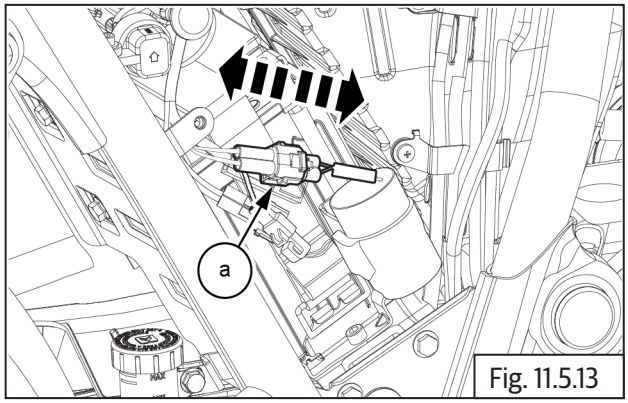

Fig. 11.5.13

11.14 RR Unit

⚠ CAUTION

Ensure motorcycle is placed on a flat surface, resting it on center stand/ramp.

Support motorcycle with suitable equipment below cradle frame. If necessary.

- Remove charcoal canister (Refer-------).
- Disconnect RR unit connectors **(a)** from wiring harness.

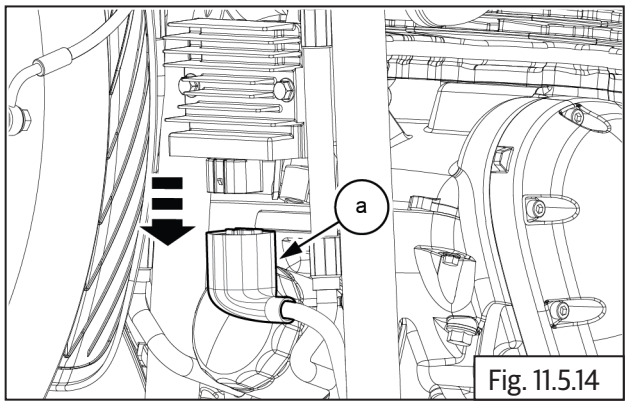

Fig. 11.5.14

- Loosen and remove 2 Nos. Hex flanged bolts **(M6) (a)** along with washer to remove RR unit.

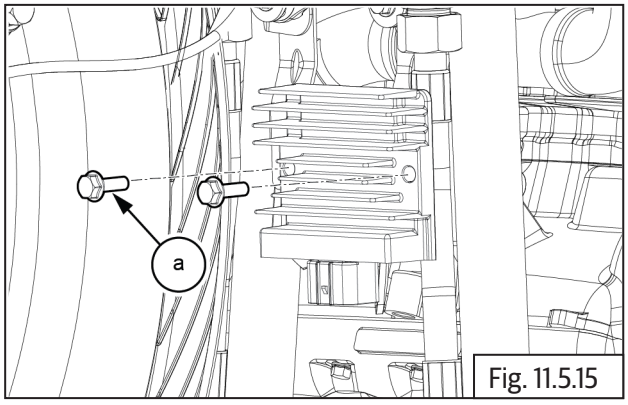

Fig. 11.5.15

	10 mm Socket with Ratchet

- Gently slide down RR unit **(a)** from engine guide rear and remove it along with bracket.

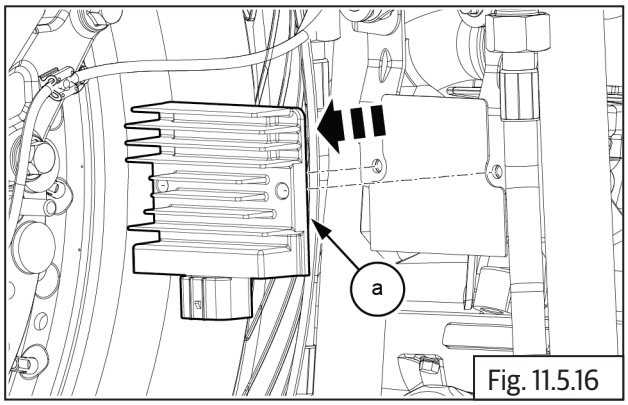

Fig. 11.5.16

11.15 Complete Wiring Harness Removal

- Disconnect the below given couplers.

1. Accessory Connector RH
2. Ignition Switch
3. Mode Switch
4. Switch Module RH
5. Front Brake Switch
6. Trafficator FRH
7 Trafficator FLH
8. USB Charger
9. Clutch Switch
10. Switch Module LH-1
11. Switch Module LH-2
12. Accessory Connector

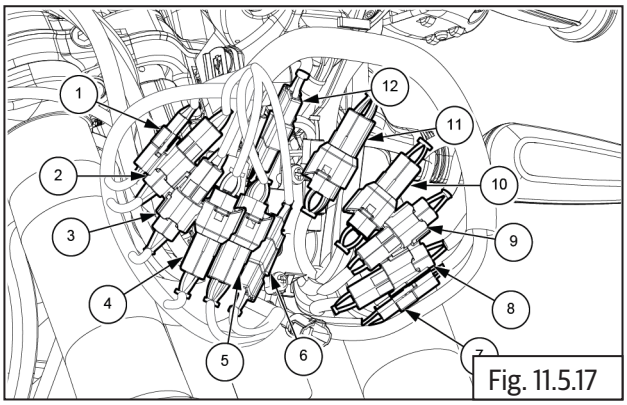

Fig. 11.5.17

- Disconnect fuel pump connector**(b)** from fuel tank **(a)**.

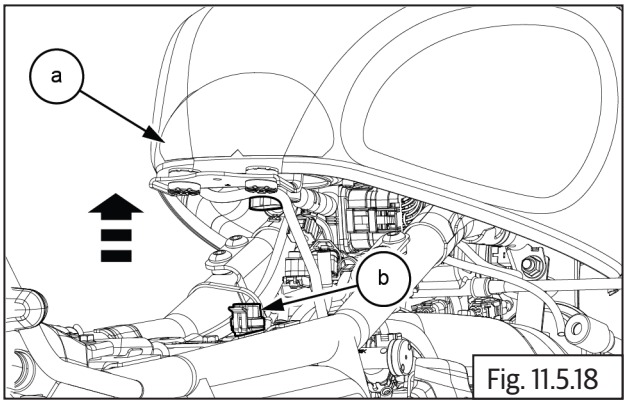

Fig. 11.5.18

- Disconnect fuel guage sensor **(a)** from fuel tank.

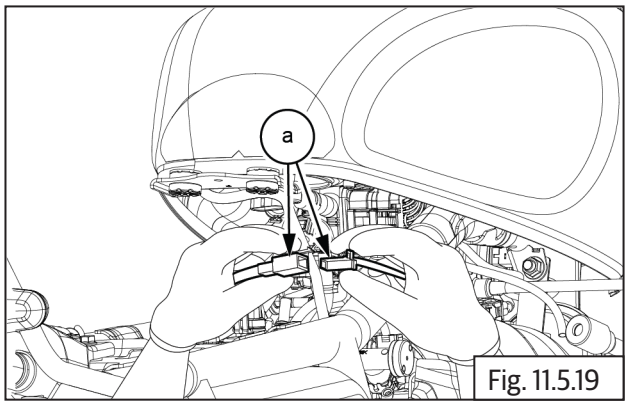

Fig. 11.5.19

- Cut the wire tags **(a)** from wiring harness.

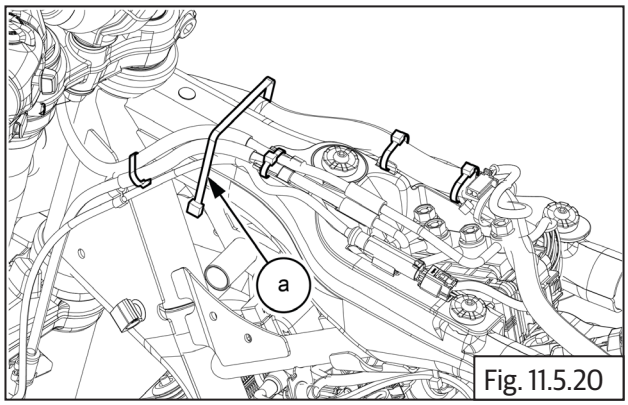

Fig. 11.5.20

- Disconnect accessory **(1)**, AHO **(2)** and main relay connectors **(3)** from main wiring harness.

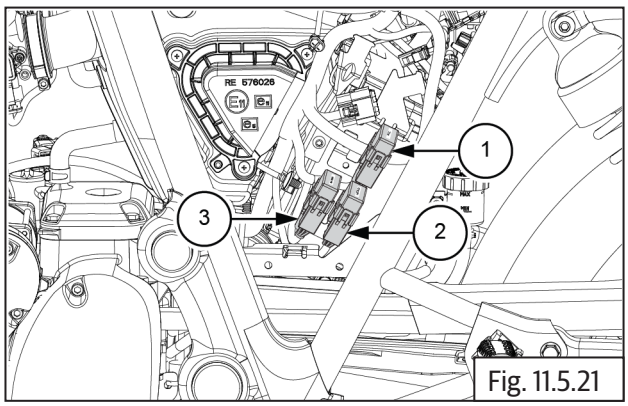

Fig. 11.5.21

- Disconnect the LHS and RHS ignition coil connectors **(a)**.

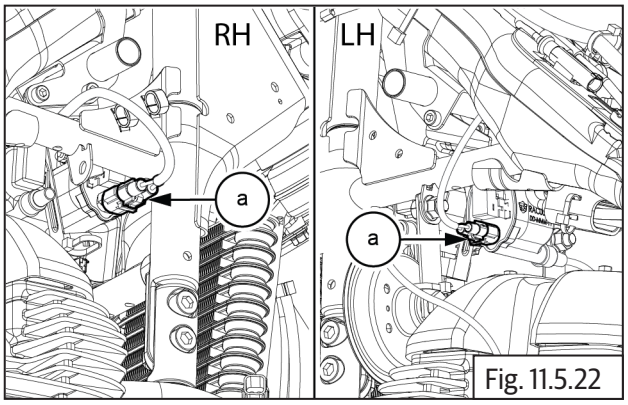

Fig. 11.5.22

- Disconnect front wheel ABS sensor connector **(a)** from LHS frame.

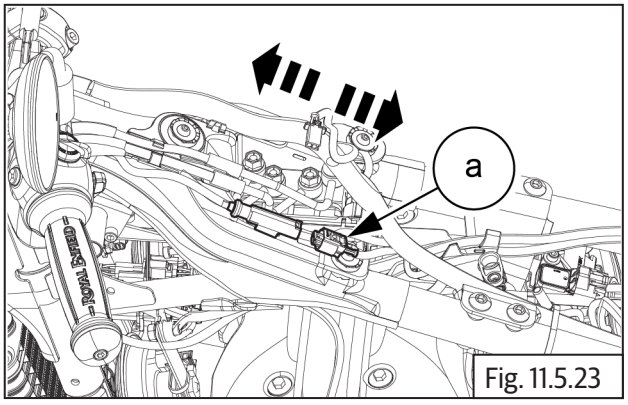

Fig. 11.5.23

- Loosen and remove the 2Nos button head bolts **(a)** from front chassis frame.
- Remove earth cable **(b)** from chassis frame.

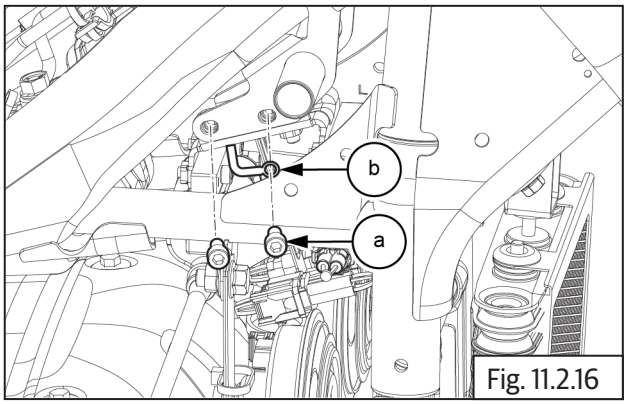

Fig. 11.2.16

	5 mm Allen Socket with Ratchet

- Disconnect OBD diagnostics connector **(a)** from the harness.

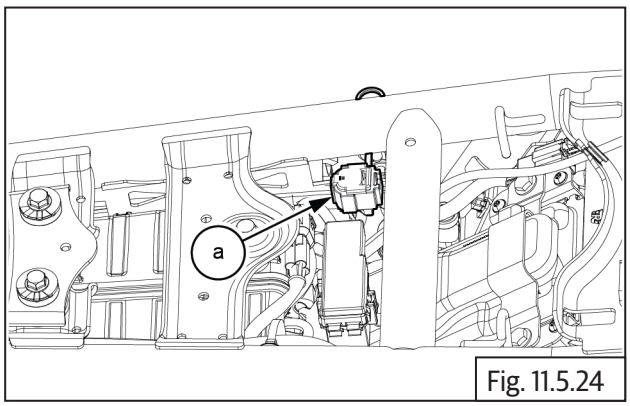

Fig. 11.5.24

- Loosen and remove oil pressure switch **(a)** along with washers **(b)** from bottom of the crankcase RH.

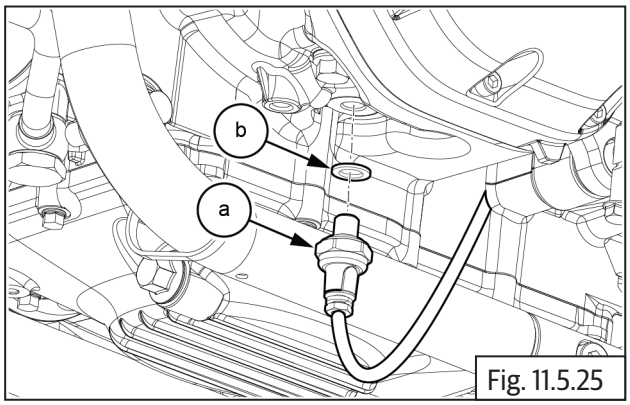

Fig. 11.5.25

- Disconnect the tail lamp rear master coupler.

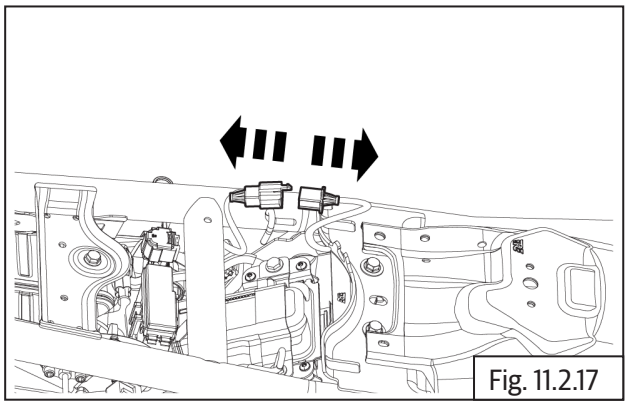
Fig. 11.2.17

- Disconnect fuel injector coupler **(a)** from LHS and RHS throttle body .

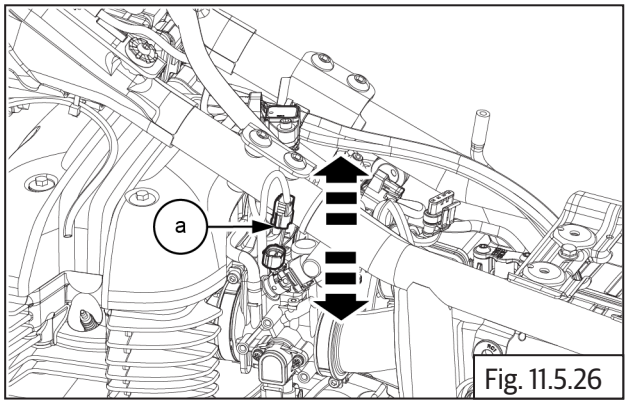

Fig. 11.5.26

- In case of any defect in the TPS **(a)**, complete throttle body assembly should be replaced.

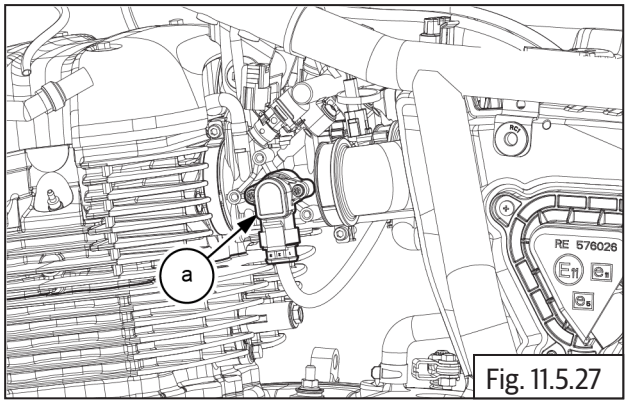

Fig. 11.5.27

- Disconnect EOT sensor wiring coupler **(a)** from the main harness above throttle body.

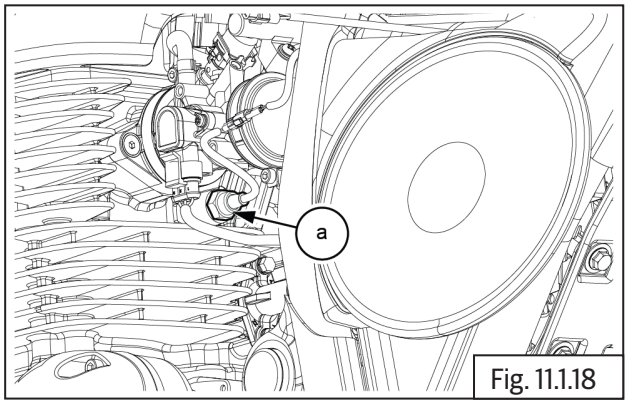

Fig. 11.1.18

- Disconnect Oxygen Sensor sensor connectors **(a)** from both LHS and RHS on the front side of engine.

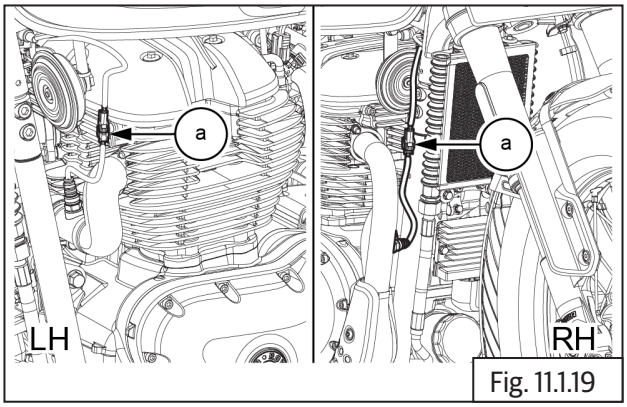

Fig. 11.1.19

- Disconnect the CAT box Oxygen Sensor coupler **(a)**.

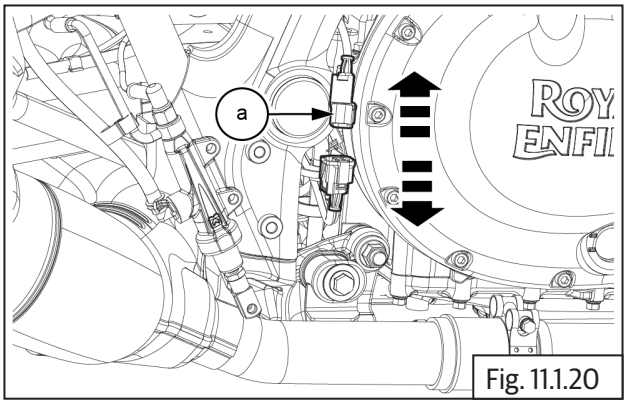

Fig. 11.1.20

- Disconnect IAT sensor connector **(a)** from wiring harness located above air filter housing .

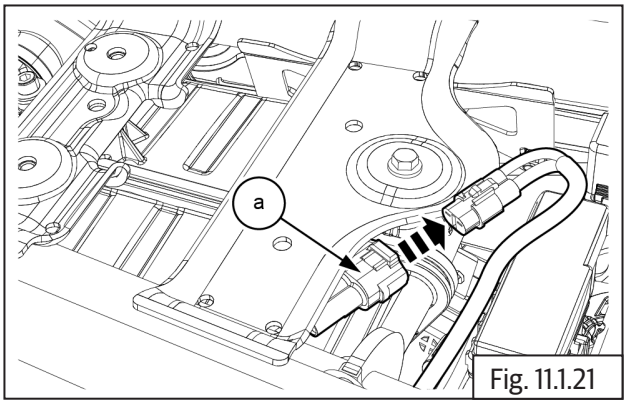

Fig. 11.1.21

- Disconnect electrical connector **(a)** from purge valve .

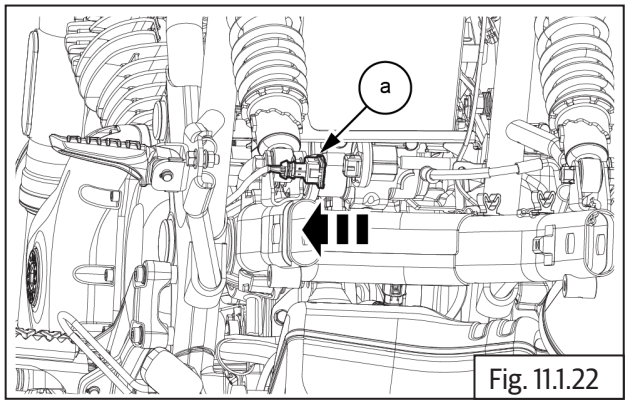

Fig. 11.1.22

- Disconnect roll over sensor wiring coupler **(a)** from main harness.

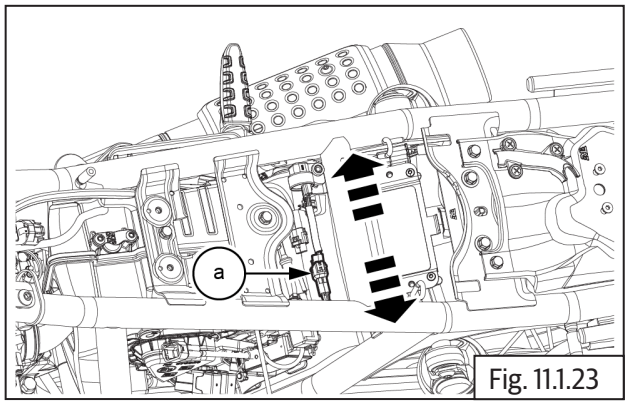

Fig. 11.1.23

- Disconnect pulsar coil connector **(a)** from main wiring harness **(b)**.

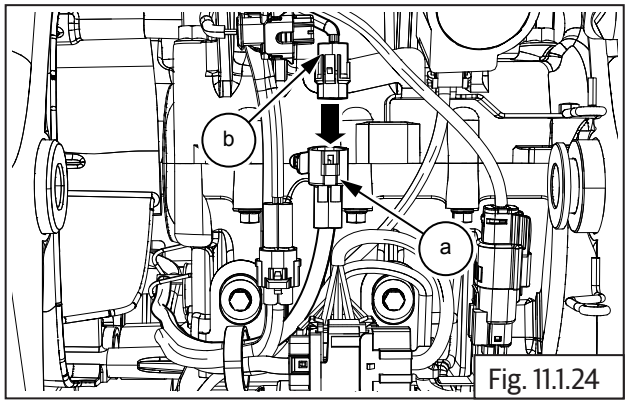

Fig. 11.1.24

- Disconnect clutch switch connector **(a)**.

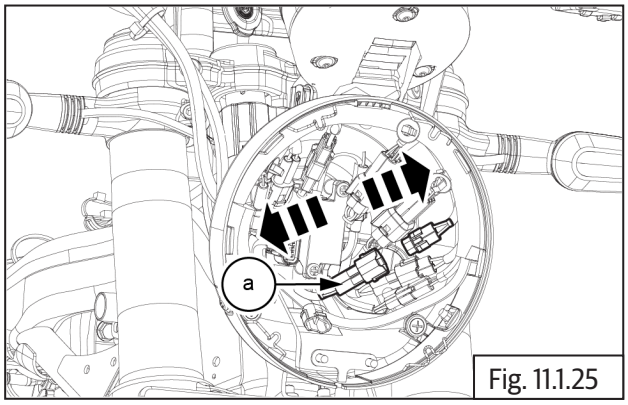

Fig. 11.1.25

- Disconnect starter solenoid connectors positive terminal **(a)** from wiring harness located below battery tray.

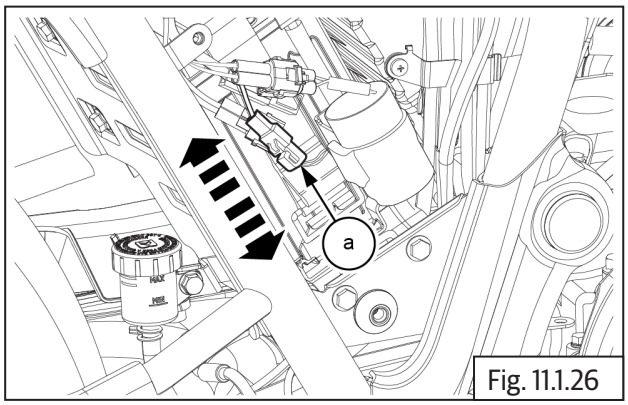

Fig. 11.1.26

- Disconnect starter solenoid connectors **(a)** from wiring harness located below battery tray.

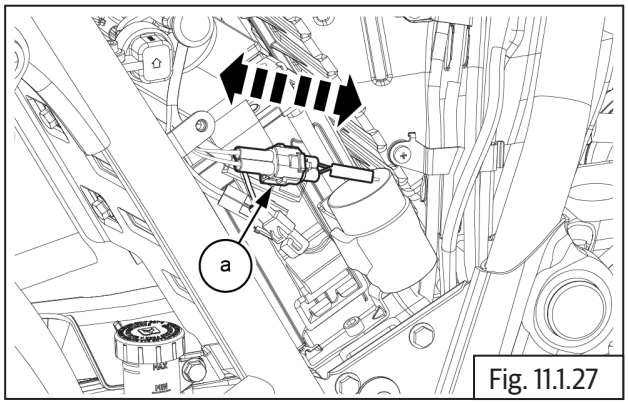

Fig. 11.1.27

- Disconnect the cable from main harness to negative terminal of the battery.

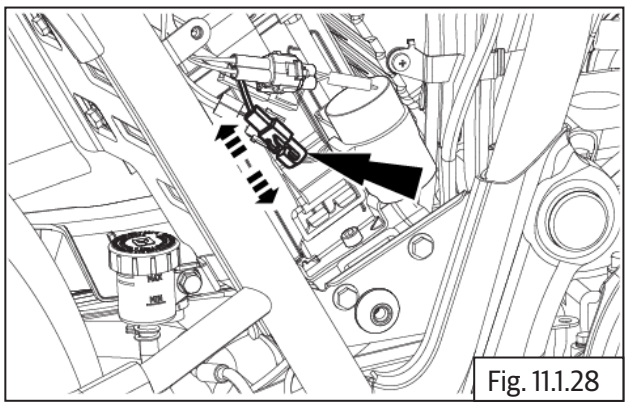
Fig. 11.1.28

- Press the lock to disconnect MAP sensor connector **(a)** from LH and RH frame.

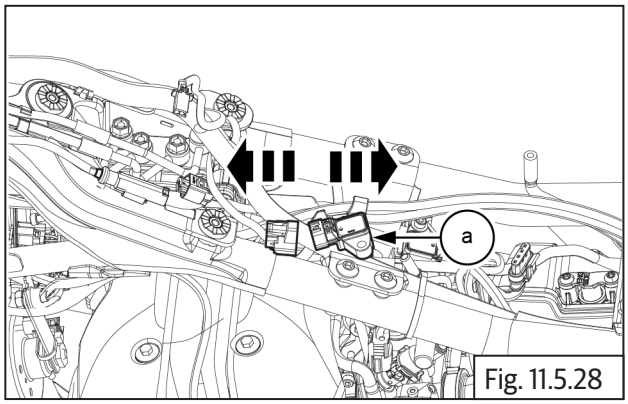

Fig. 11.5.28

- Disconnect rear wheel ABS sensor connector **(a)** located in RHS battery tray.

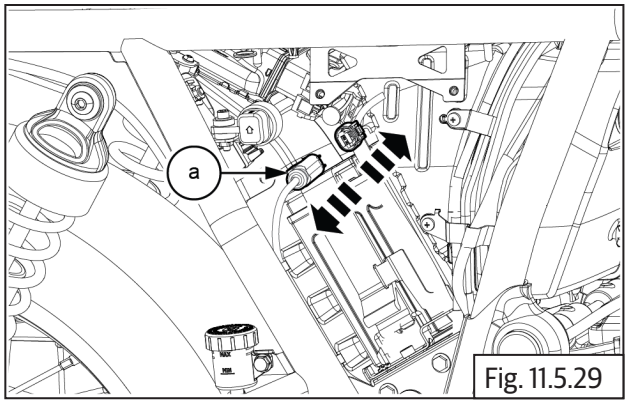

Fig. 11.5.29

- Disconnect ABS modulator connector **(a)**.

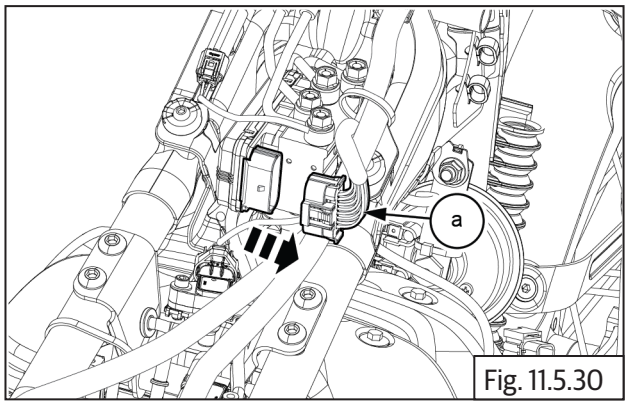

Fig. 11.5.30

- Remove the side stand switch with harness **(a)** from frame .

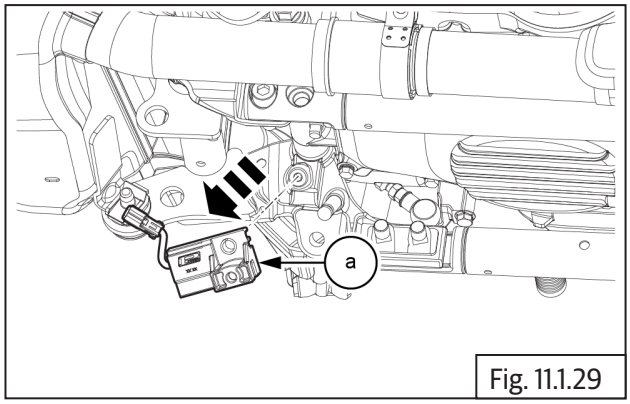

Fig. 11.1.29

- Disconnect ECU connector **(a)**.

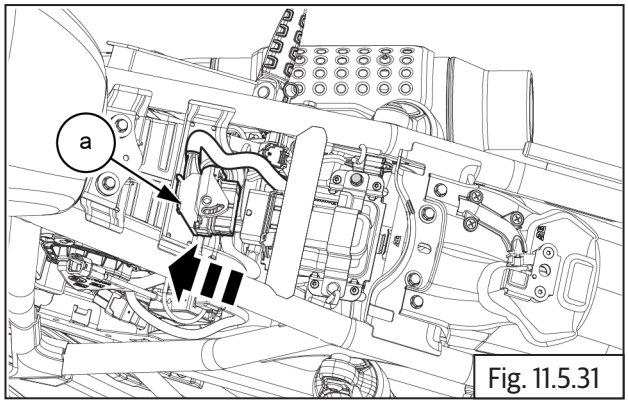

Fig. 11.5.31

- Remove fuse carrier **(a)** from clamp located on frame.

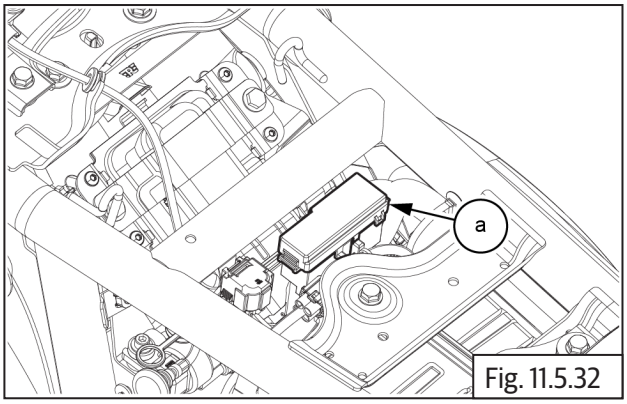

Fig. 11.5.32

- Remove complete wiring harness **(a)** from motor cycle.

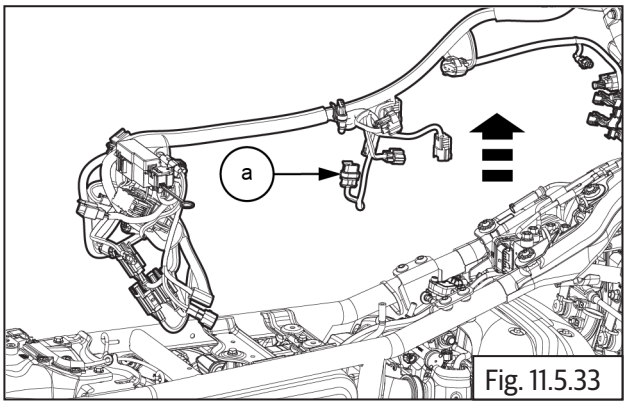

Fig. 11.5.33

Inspection

- Inspect connector pins for any bends, corrosions and damages.
- Inspect headlamp holder for any scratches, rust, cracks and damages. Replace if it is defective.
- Inspect and replace reflector if it has any damages and/or distraction.
- Inspect if wire clips are loosened and tighten appropriately.
- Inspect if headlamp holder bolt is loosened and tighten appropriately.
- Inspect the bulb filament for any damages and replace.

Battery

- Check battery for any damages.
- Check the battery terminals for sulfating, corrosion or damages.
- Test voltage level. It should be 12.8V to 13.2V approximately.

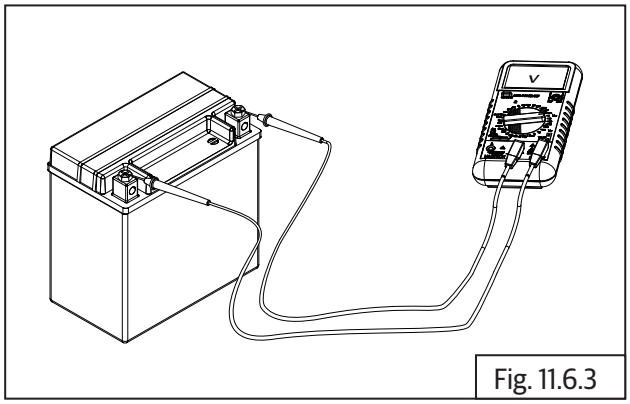
Fig. 11.6.3

Assembly

11.16 Complete Wiring Harness Assembly

- Place complete wiring harness **(a)** on the motor cycle.

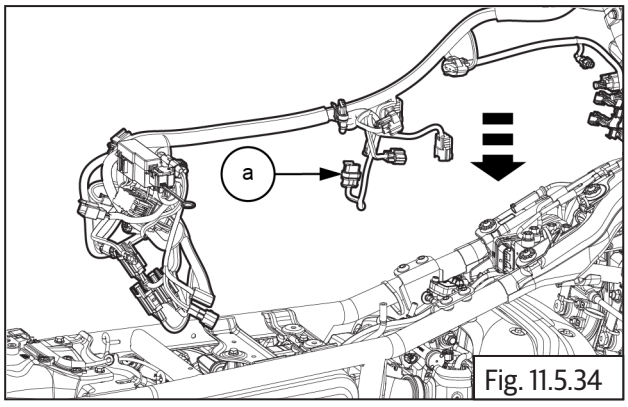

Fig. 11.5.34

- Locate and connect fuse carrier**(a)** on clamp located on the frame.

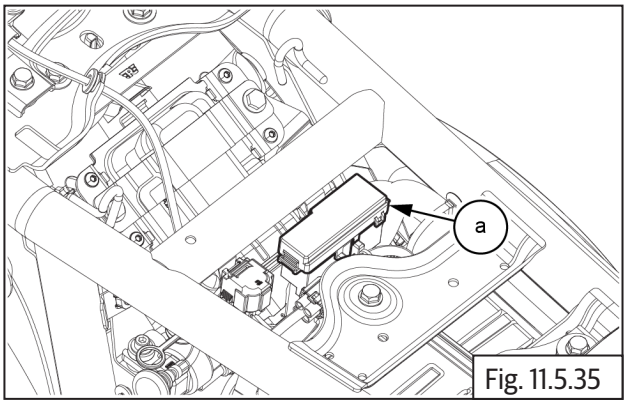

Fig. 11.5.35

- Connect ECU connector **(a)** and ensure it is locked properly.

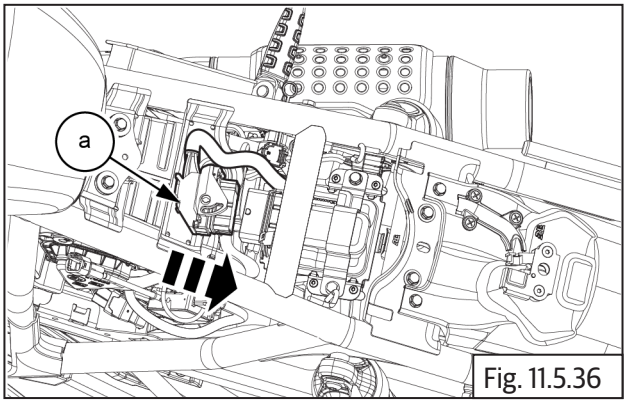

Fig. 11.5.36

- Connect the side stand switch with harness **(a)** on frame .

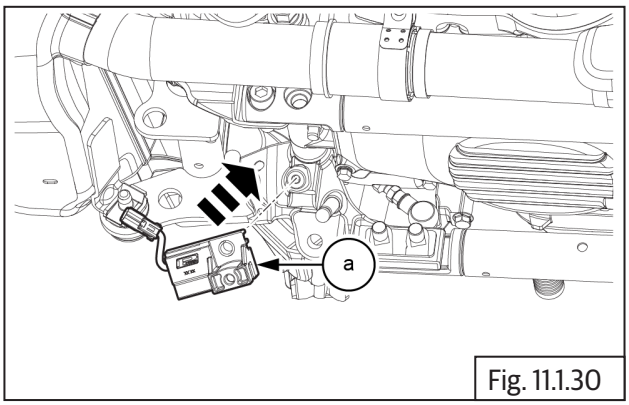

Fig. 11.1.30

- Connect ABS modulator connector **(a)**.

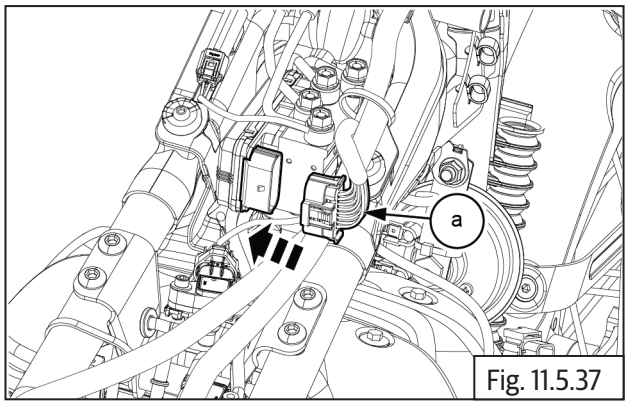

Fig. 11.5.37

- Connect rear wheel ABS sensor connector **(a)** on RHS battery tray.

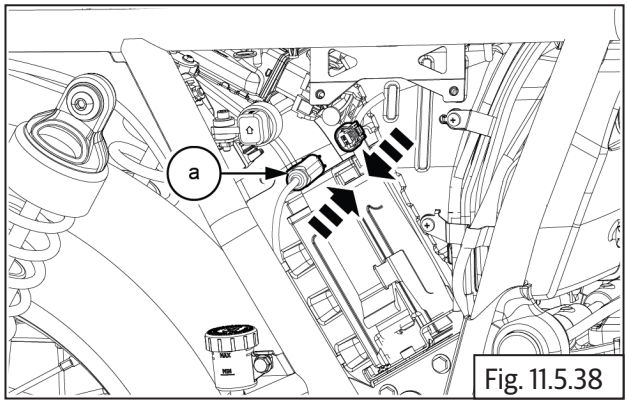

Fig. 11.5.38

- Connect MAP sensor connector **(a)** on LH and RH frame.

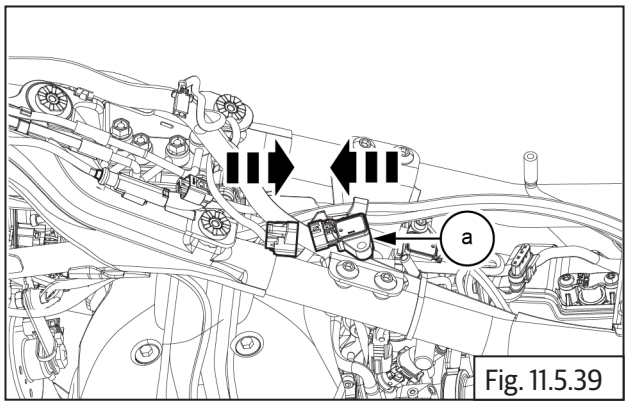

Fig. 11.5.39

- Connect the cable to main harness to negative terminal of the battery.

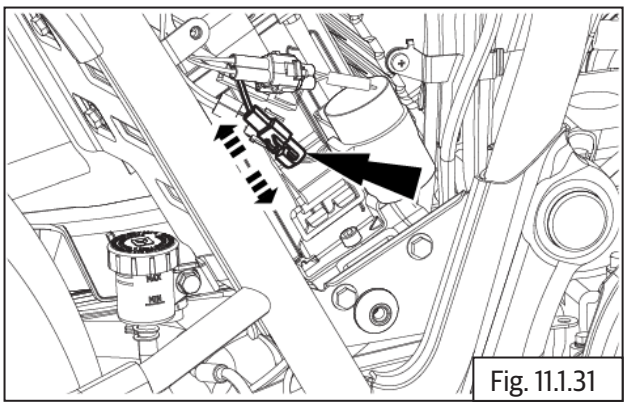
Fig. 11.1.31

- Connect starter solenoid connectors **(a)** on wiring harness located below battery tray.

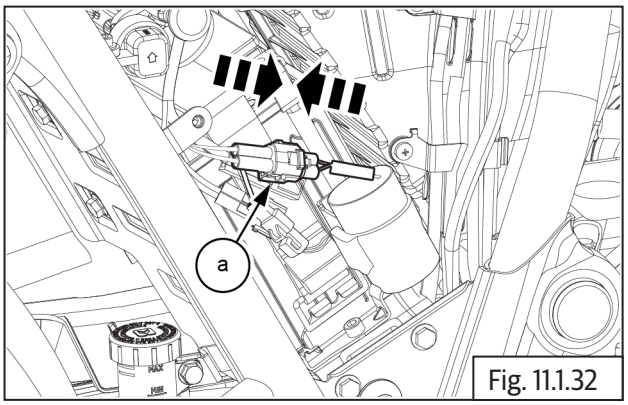

Fig. 11.1.32

- Connect starter solenoid connectors positive terminal **(a)** on wiring harness located below battery tray.

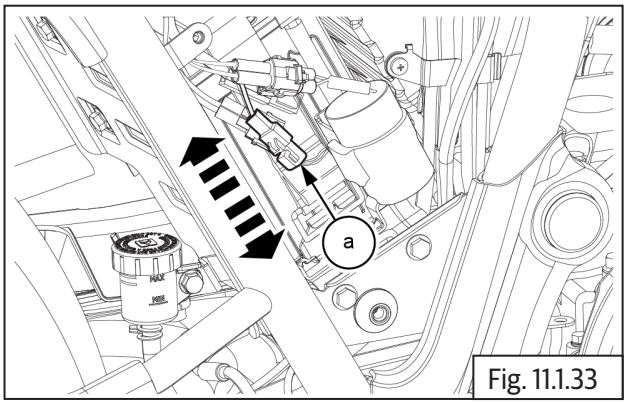

Fig. 11.1.33

- Connect clutch switch connector **(a)**.

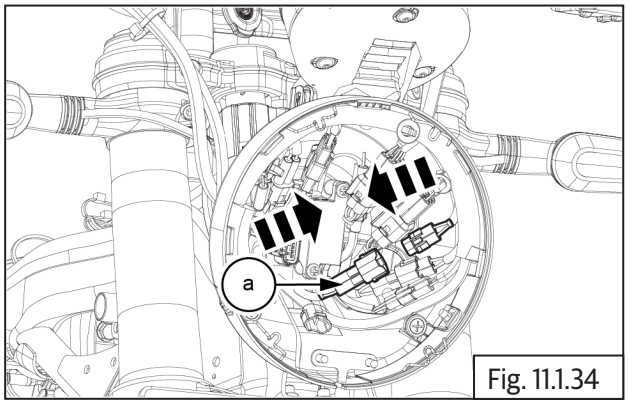

Fig. 11.1.34

- Connect pulsar coil connector **(a)** on main wiring harness **(b)**.

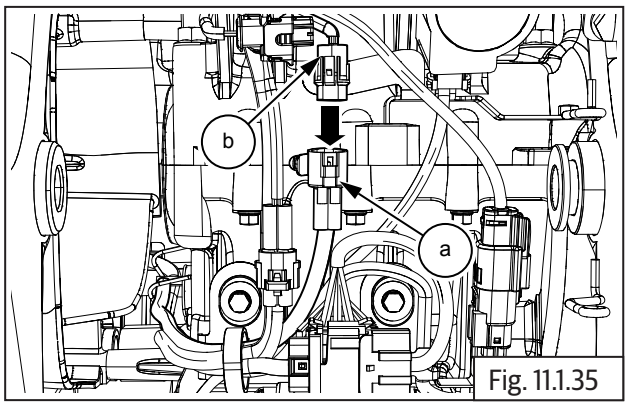

Fig. 11.1.35

- Connect roll over sensor wiring coupler on main harness.

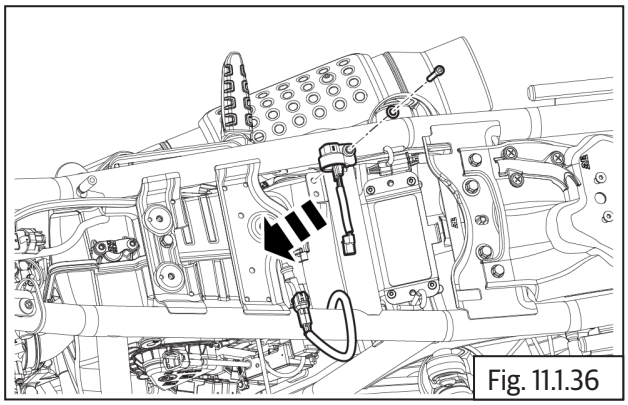
Fig. 11.1.36

- Connect electrical connector **(a)** on purge valve .

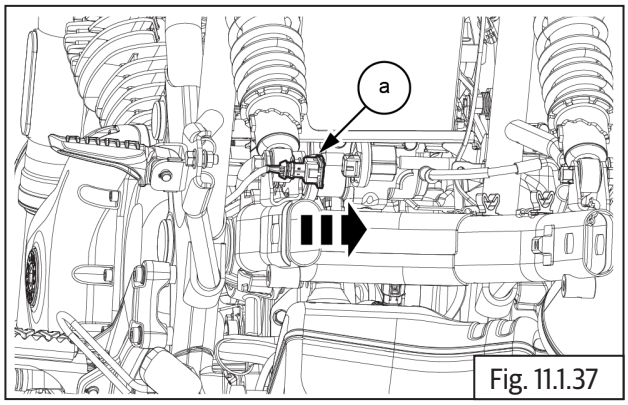

Fig. 11.1.37

- Connect IAT sensor connector **(a)** on wiring harness located above air filter housing .

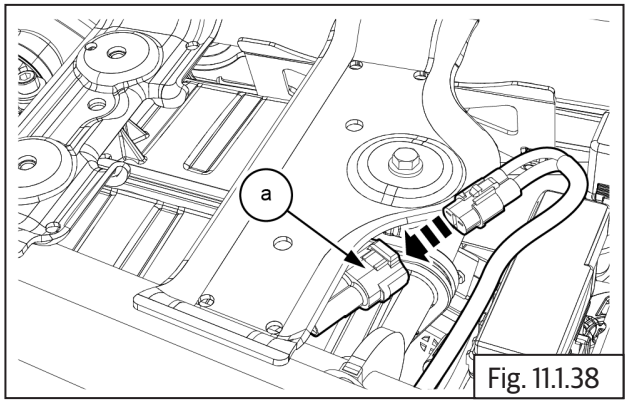

Fig. 11.1.38

- Connect the CAT box Oxygen Sensor coupler **(a)**.

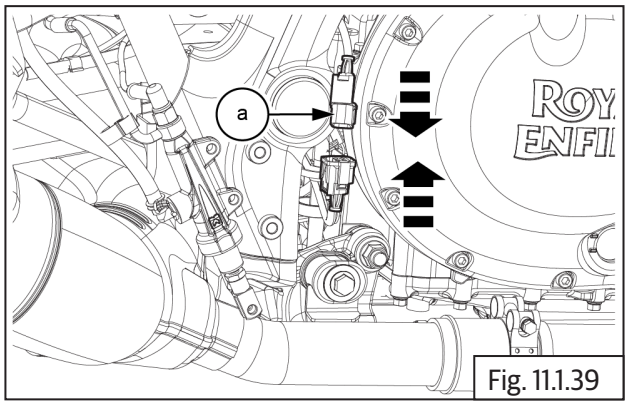

Fig. 11.1.39

- Connect Oxygen Sensor sensor connectors **(a)** on both LHS and RHS on the front side of engine.

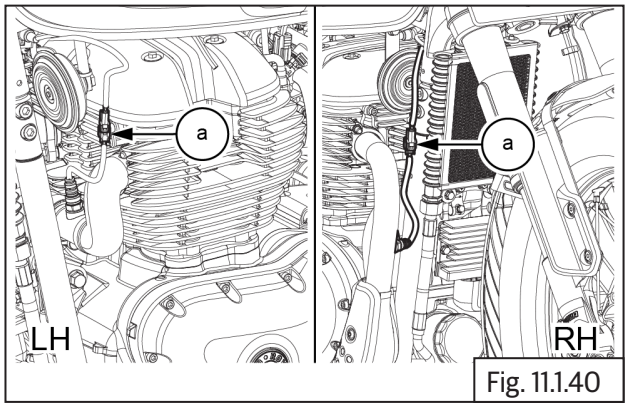

Fig. 11.1.40

- Connect EOT sensor wiring coupler **(a)** on the main harness above throttle body.

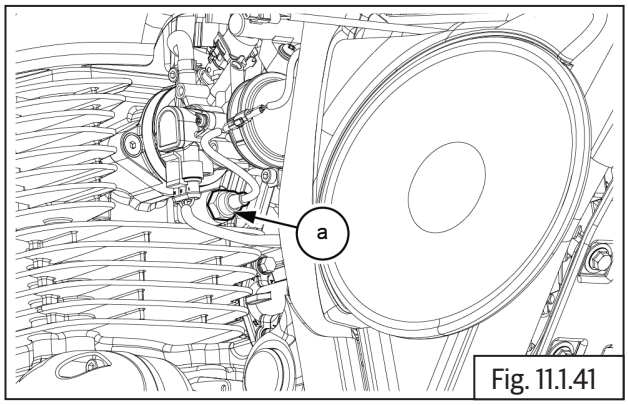

Fig. 11.1.41

- In case of any defect in the TPS **(a)**, complete throttle body assembly should be replaced.

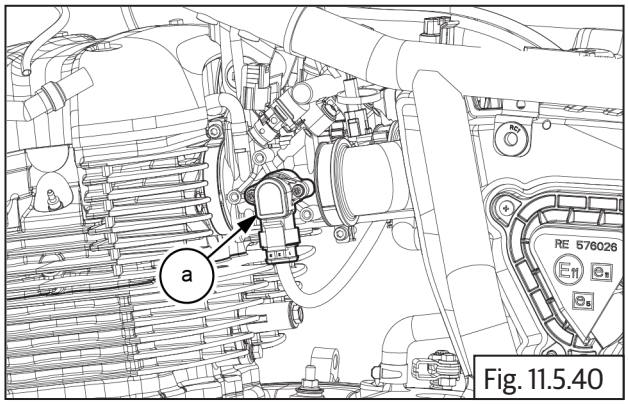

Fig. 11.5.40

- Connect fuel guage sensor **(a)** on fuel tank.

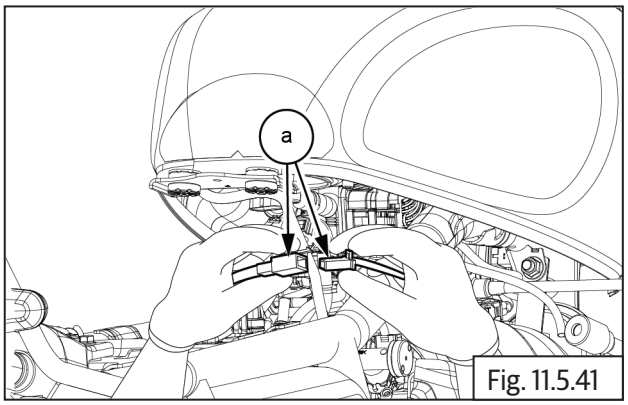

Fig. 11.5.41

- Connect fuel pump connector**(b)** on the fuel tank **(a)**.

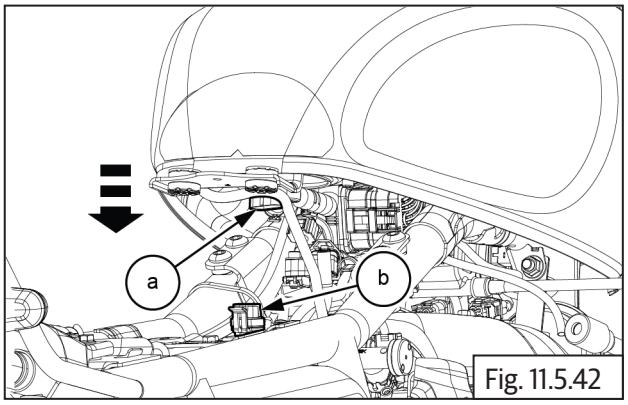

Fig. 11.5.42

- Connect fuel injector couplers LHS and RHS **(a)** on throttle position sensor.

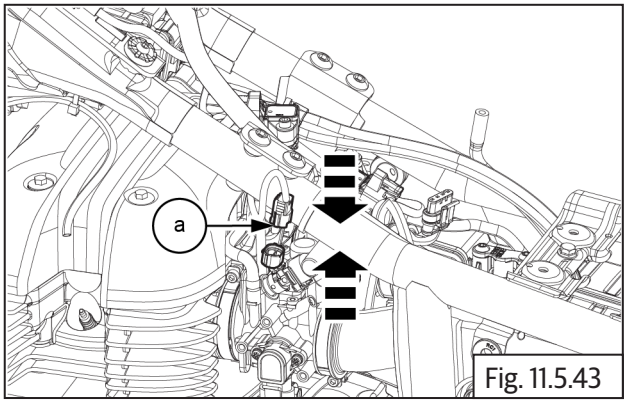

Fig. 11.5.43

- Fix the wire tags **(a)** on wiring harness.

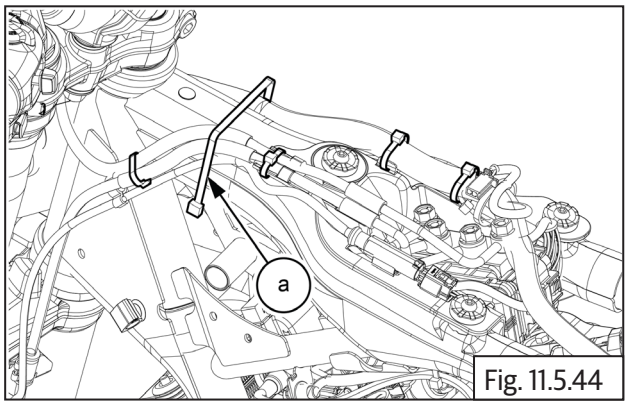

Fig. 11.5.44

- Connect the tail lamp rear master coupler.

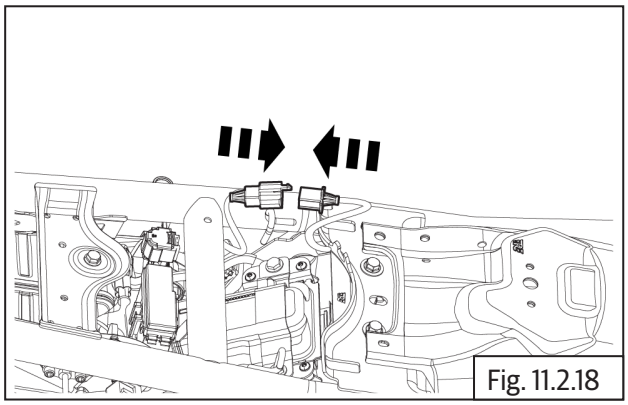
Fig. 11.2.18

- Locate and tighten pressure switch **(a)** along with washers **(b)** on bottom of the crankcase LH.

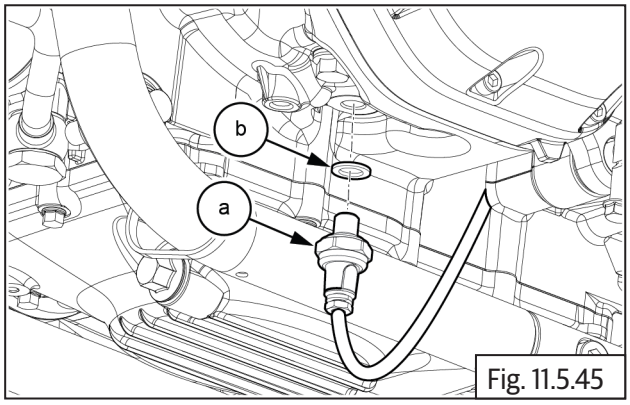

Fig. 11.5.45

- Connect OBD diagnostics connector **(a)** on the harness.

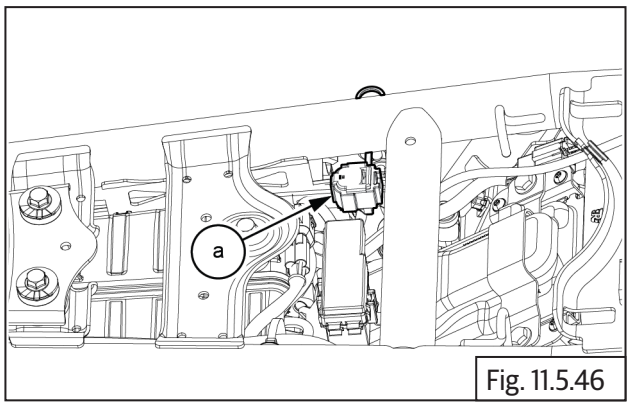

Fig. 11.5.46

- Connect front wheel ABS sensor connector **(a)** on LHS frame.

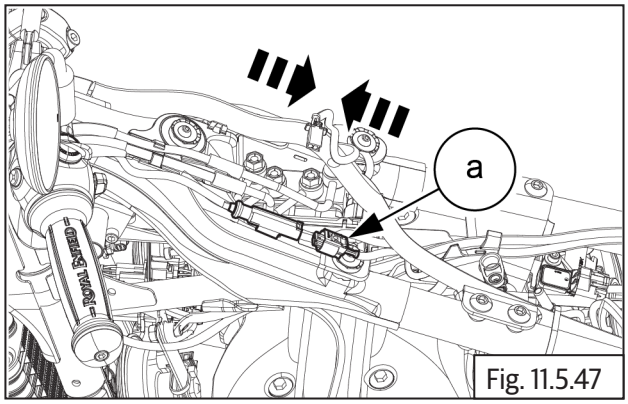

Fig. 11.5.47

- Tighten and secure the 2 cap bolts **(M6) (a)** back onto the earth cable **(b)**.

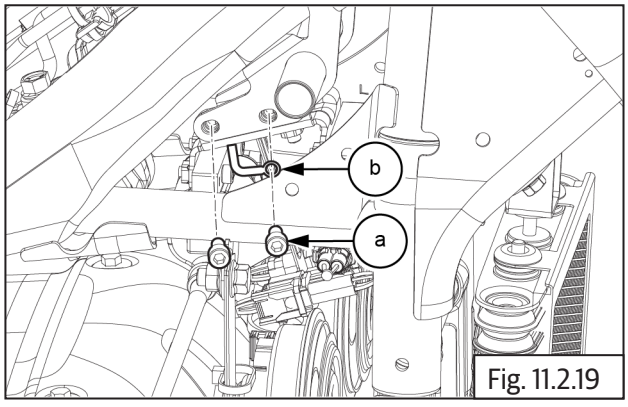

Fig. 11.2.19

	5 mm Allen socket with Ratchet
Torque	8- 12 Nm / 0.8 - 1.2 kgf-m

- Connect the LHS and RHS ignition coil connectors **(a)**.

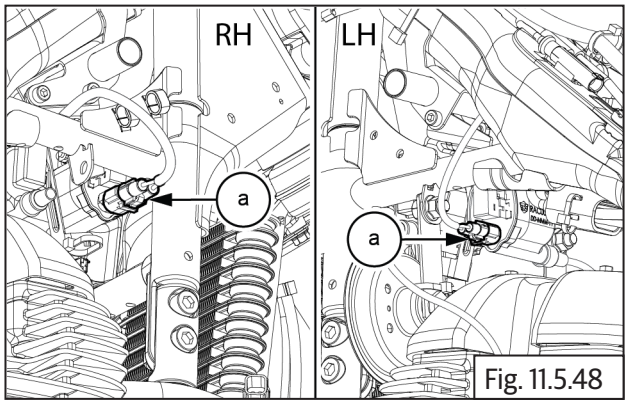

Fig. 11.5.48

- Connect accessory **(1)**, AHO **(2)** and main relay connectors **(3)** on main wiring harness.

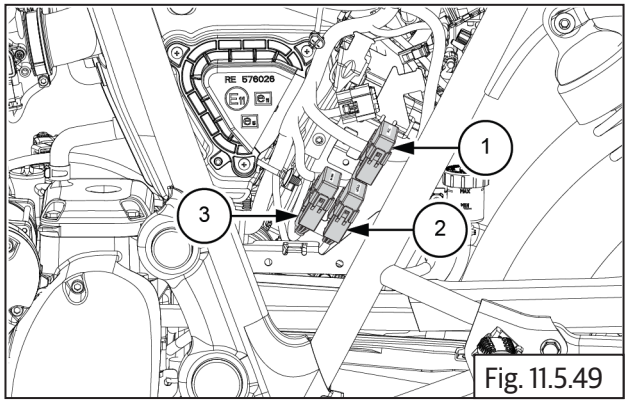

Fig. 11.5.49

- Connect the 6 Nos coupler LH and 6 Nos coupler RH from headlamp.

1. Accessory Connector RH
2. Ignition Switch
3. Mode Switch
4. Switch Module RH
5. Front Brake Switch
6. Trafficator FRH
7 Trafficator FLH
8. USB Charger
9. Clutch Switch
10. Switch Module LH-1
11. Switch Module LH-2
12. Accessory Connector

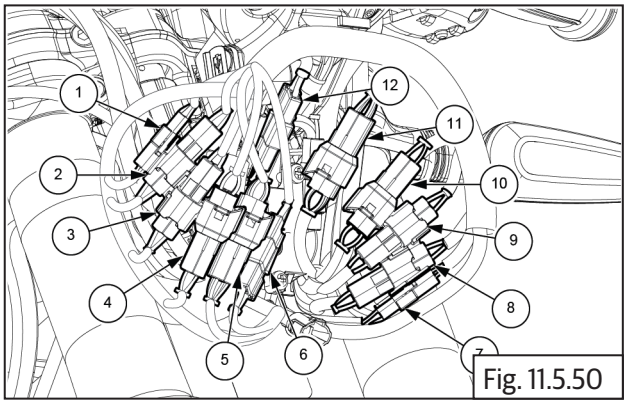

Fig. 11.5.50

11.17 RR Unit

- Locate RR unit **(a)** into engine guide rear along with bracket and gently slide up to fix RR unit.

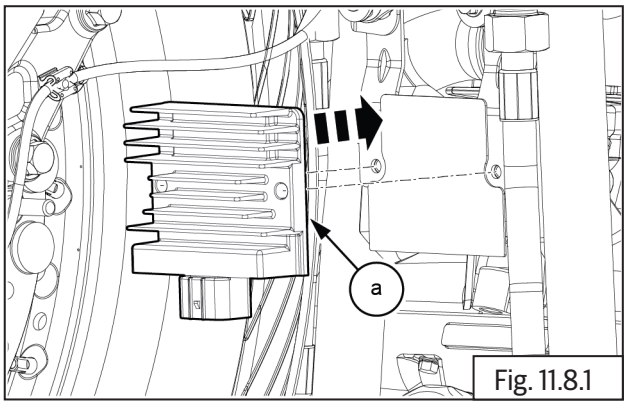

Fig. 11.8.1

- Insert and tighten 2 Nos. Hex flanged bolts **(M6) (a)** along with washer to fix RR unit.

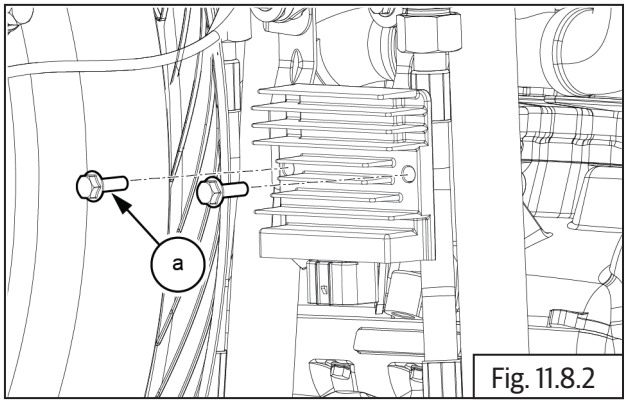

Fig. 11.8.2

	10 mm Socket with Ratchet
Torque	9-12Nm / 0.9 - 1.2kgf-m

- Connect RR unit connector **(a)** into wiring harness and ensure they are locked properly.

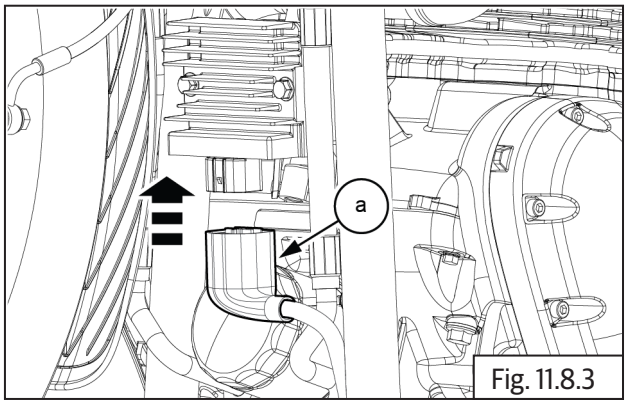

Fig. 11.8.3

11.18 Starter Solenoid

- Gently slide and locate solenoid coil into battery bracket .
- Connect solenoid coil coupler **(a)**.

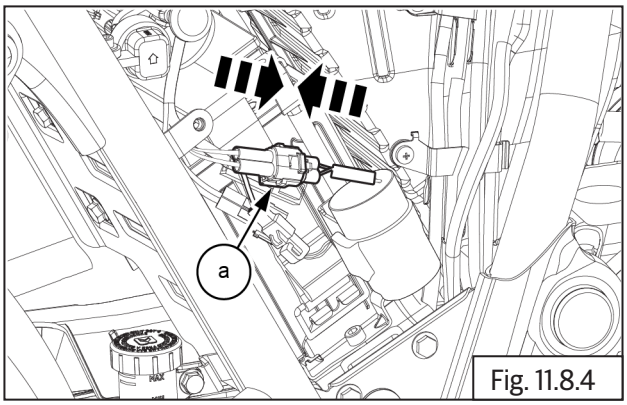

Fig. 11.8.4

- Connect starter solenoid connectors **(a)** into wiring harness.

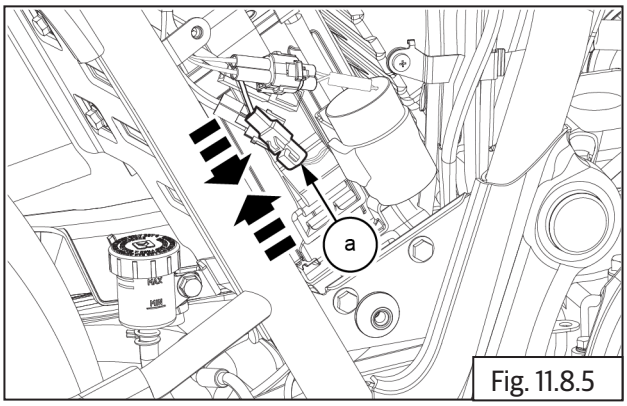

Fig. 11.8.5

11.19 Battery Terminals

- Connect battery negative (-) terminal and tighten Hex head bolt **(M6) (a)**.

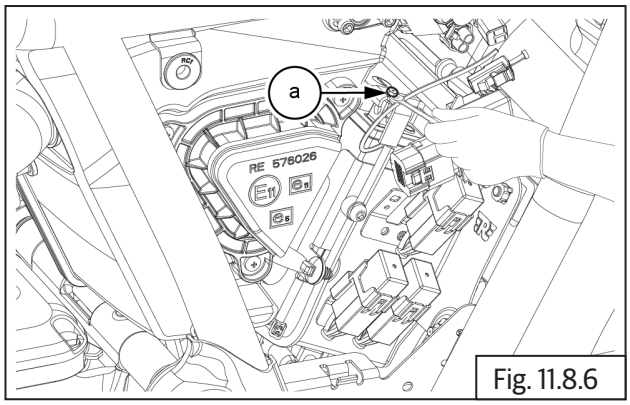

Fig. 11.8.6

	10 mm Double end spanner
	3-4Nm / 0.3 - 0.4kgf-m

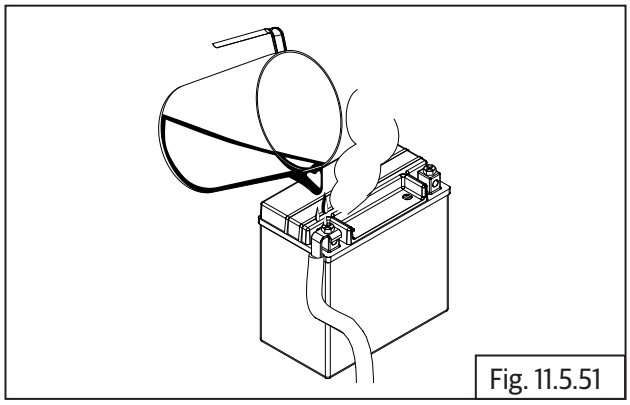
Fig. 11.5.51

NOTE
• *If battery lead is difficult to disconnect due to rust or corrosion of battery terminals, pour recommended battery terminal cleaning solution on terminals and then try to disconnect.*

11.20 Trafficator

- Locate tail lamp housing **(a)** on the frame.

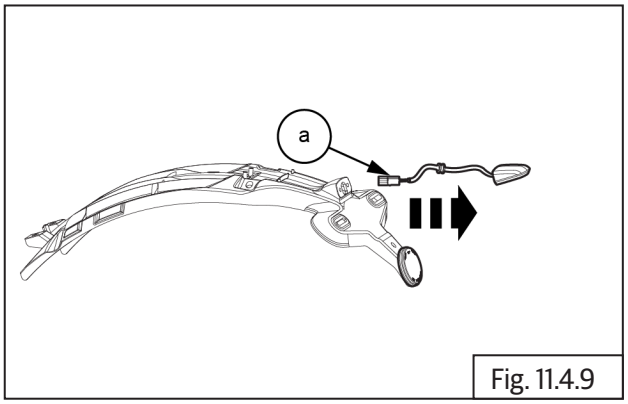

Fig. 11.4.9

- Locate and tighten 2 Nos button bolts **(M5) (a)** into the rear mudflap.

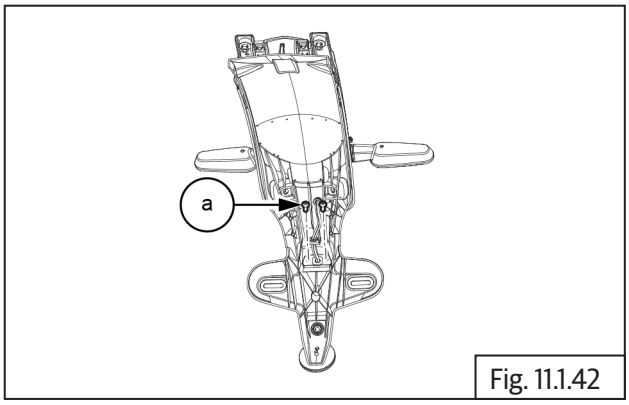

Fig. 11.1.42

	4 mm Allen Socket with Ratchet
	1.75 - 2 N-m / 0.17 - 0.2 kgf-m

11.21 Direction Trafficators - Rear

- Support and locate the tail lamp housing **(a)** on the frame.

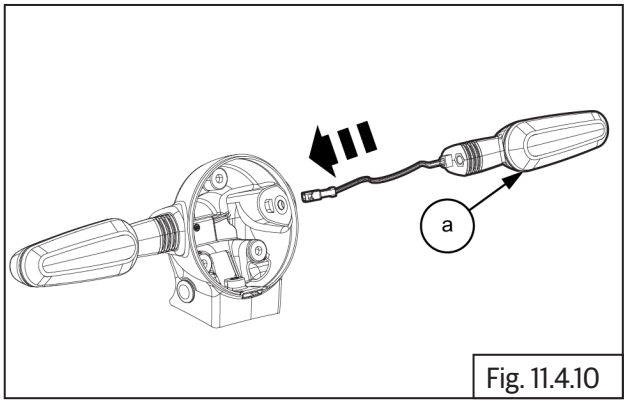

Fig. 11.4.10

- Locate the trafficator mounting allen bolt **(a)** into tail lamp housing.

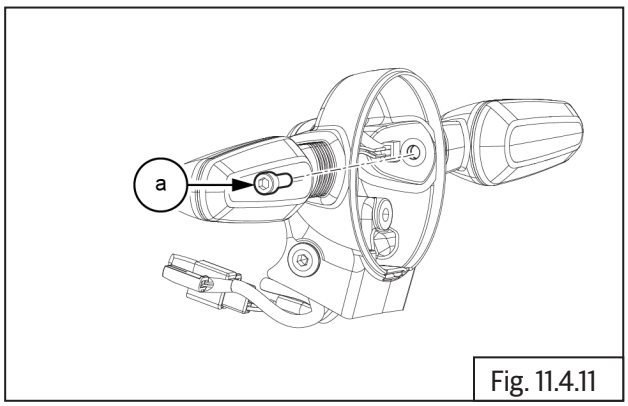

Fig. 11.4.11

	5 mm Allen socket with ratchet
	8 - 10 Nm / 0.8 - 1.0 kgf-m

- Locate the tail lamp cover **(a)** on tail lamp housing.

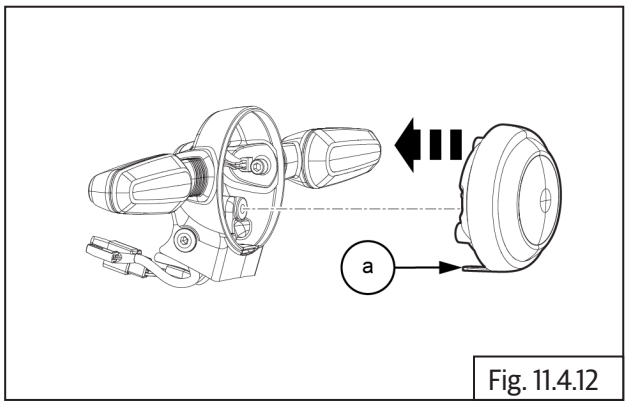

Fig. 11.4.12

- Locate and tighten 4 Nos screw **(a)** on the tail lamp housing.

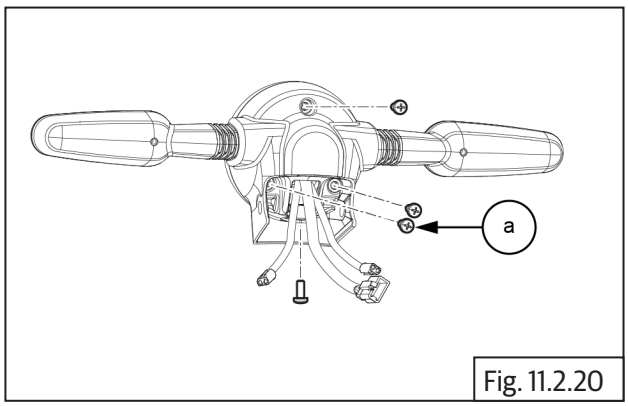

Fig. 11.2.20

	Phillips screw driver (+)
	2 - 3 Nm / 0.2 - 0.3 kgf-m

- Locate the housing rubber **(a)** on tail lamp housing.

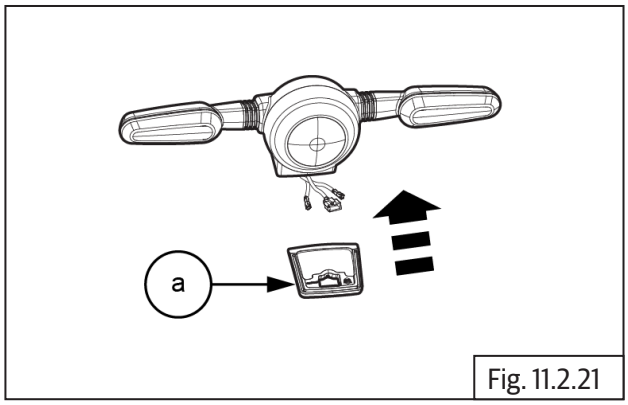

Fig. 11.2.21

- Locate the tail lamp assembly **(a)** on the rear mudguard.

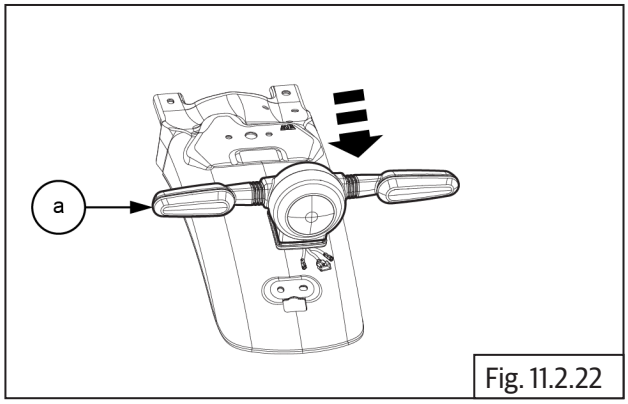

Fig. 11.2.22

- Loacte tail lamp housing **(a)** on the rear mudguard.

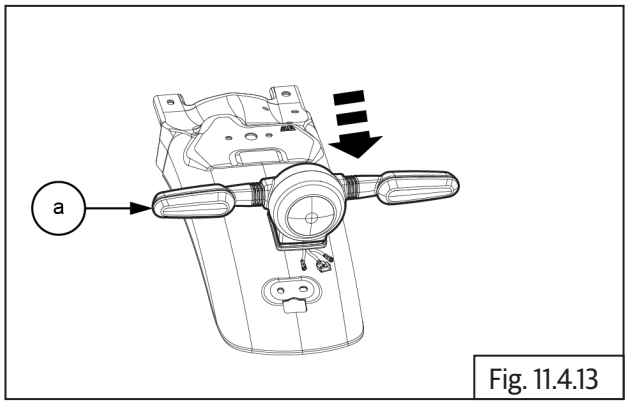

Fig. 11.4.13

- Connect the trafficator connectors LH **(a)** and RH **(b)** on the rear mudguard.

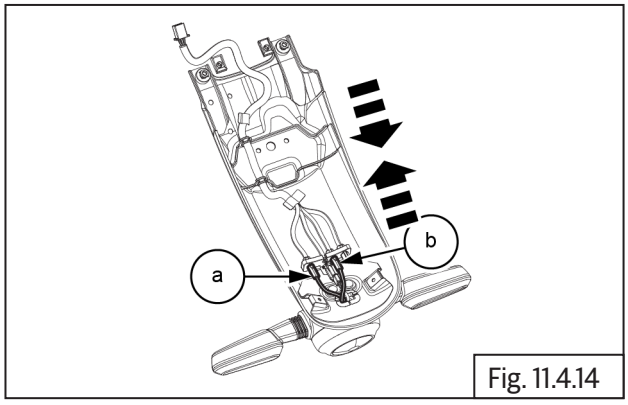

Fig. 11.4.14

11.22 Tail Lamp

- Locate the stud plate **(a)** on the mudguard.

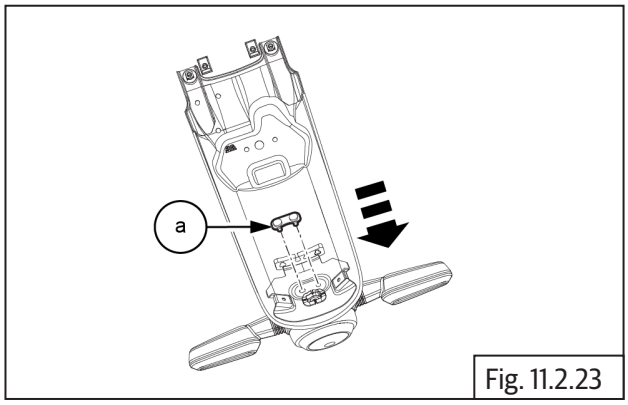

Fig. 11.2.23

- Connect the license plate luminator lamp connector on the rear mudguard wiring harness.

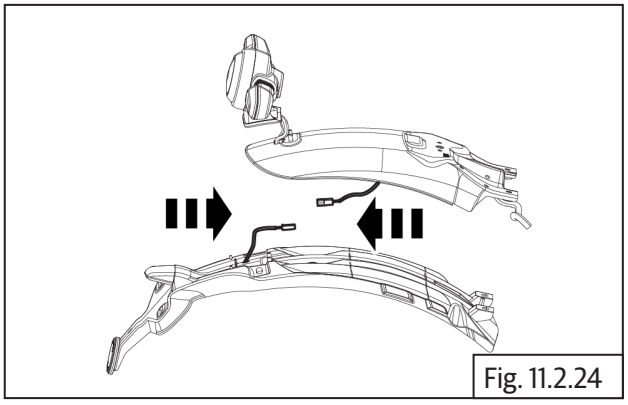

Fig. 11.2.24

- Locate the mudflap on the rear mudguard.

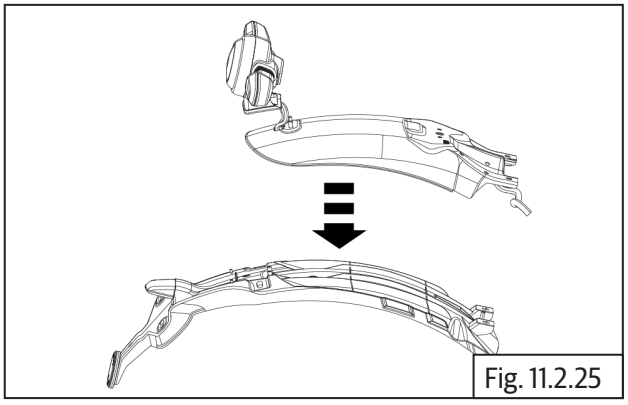

Fig. 11.2.25

- Locate and tighten 2 Nos. screws **(a)** on tail lamp lens.

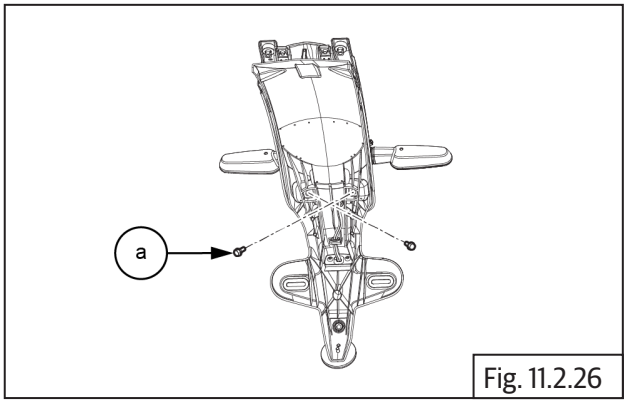

Fig. 11.2.26

	10 mm Socket with Ratchet.
	7 - 10 Nm / 0.7 - 1.0 kgf-m

- Locate the rear mudguard **(a)** on the vehicle.

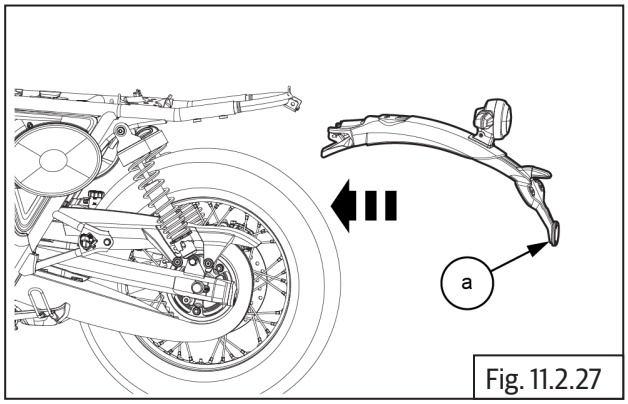

Fig. 11.2.27

- Locate and tighten the 2 Nos flange head bolts **(M6) (a)** and nut plate **(b)** into mudguard sub assembly.

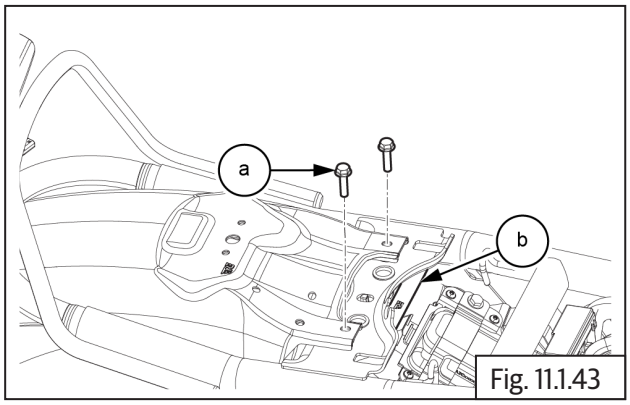

Fig. 11.1.43

	10 mm Socket with Ratchet.
	9 - 12 Nm / 0.9 - 1.2 kgf-m

- Locate and tighten 2 Nos nut **(M6) (a)** on the tail lamp bracket.

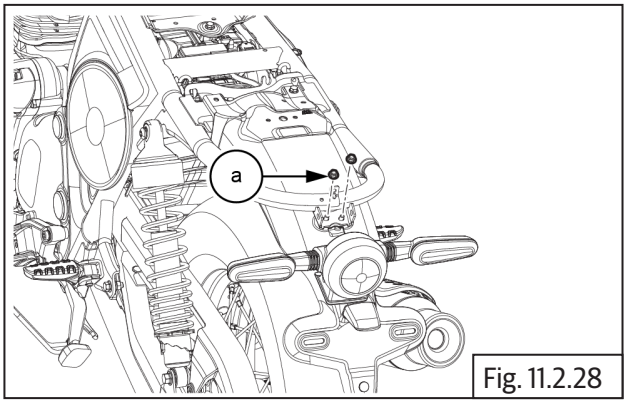

Fig. 11.2.28

	10 mm Socket with Ratchet.
	9 - 12 Nm / 0.9 - 1.2 kgf-m

- Locate the tail lamp assembly **(a)** on the vehicle.

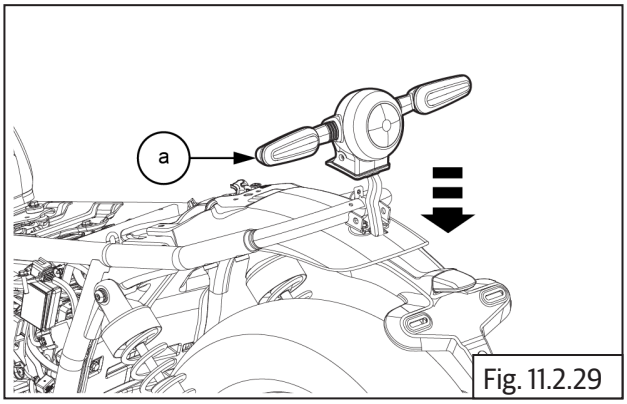

Fig. 11.2.29

- Locate and tighten 2 Nos. screws **(a)** on tail lamp lens.

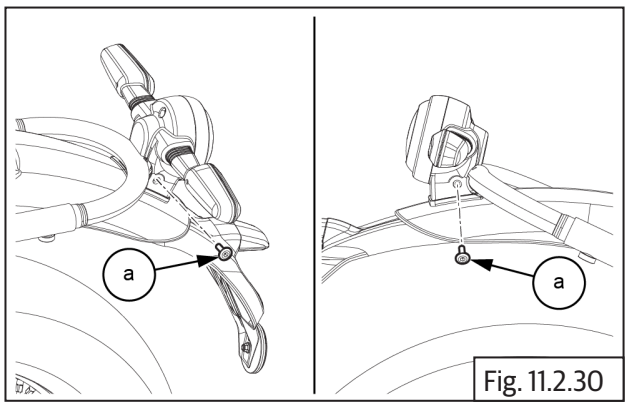

Fig. 11.2.30

	5 mm Socket with ratchet
	7- 10 Nm / 0.7 - 1.0 kgf-m

- Connect the rear master coupler.

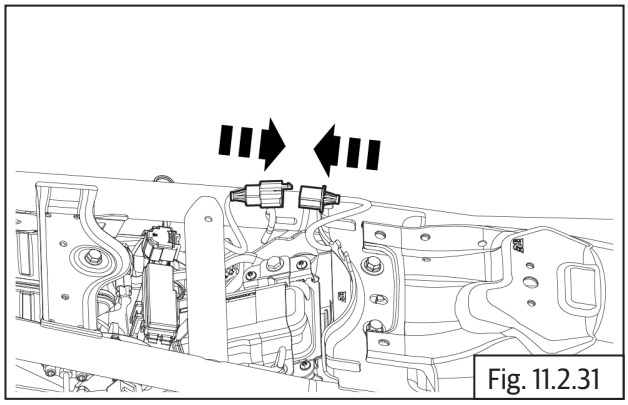
Fig. 11.2.31

NOTE
• *After assembling tail lamp assembly, check tail lamp operation & brake light operation.*

11.23 Horn Assembly

- Locate the horn **(a)** on the vehicle.

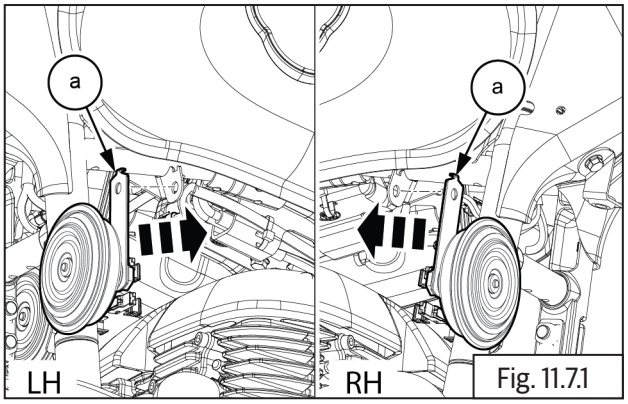

Fig. 11.7.1

- Locate and tighten Hex flange bolt **(M8) (a)** and nut **(b)** into LH and RH horn bracket.

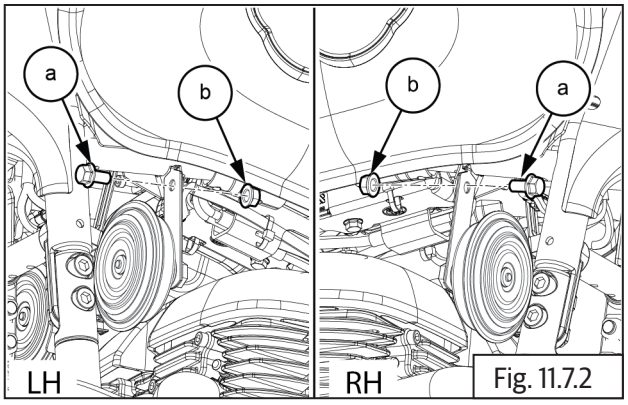

Fig. 11.7.2

	12 mm Socket with Ratchet 12 mm Ring spanner
	15 - 20 Nm / 1.5 - 2.0 kgf-m

- Locate the RH horn connectors **(a).**

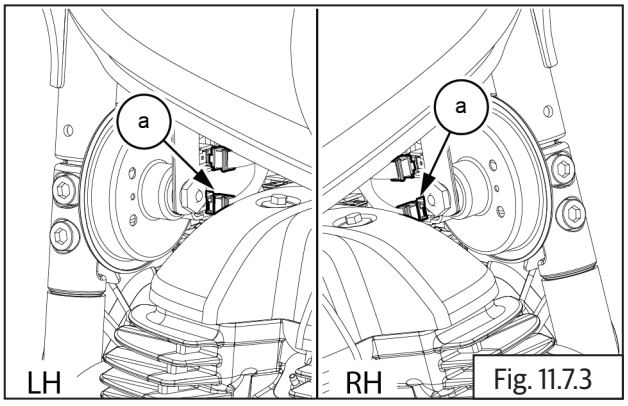

Fig. 11.7.3

11.24 Ignition Switch Cum Steering Lock

- Locate the ignition switch **(a)**.

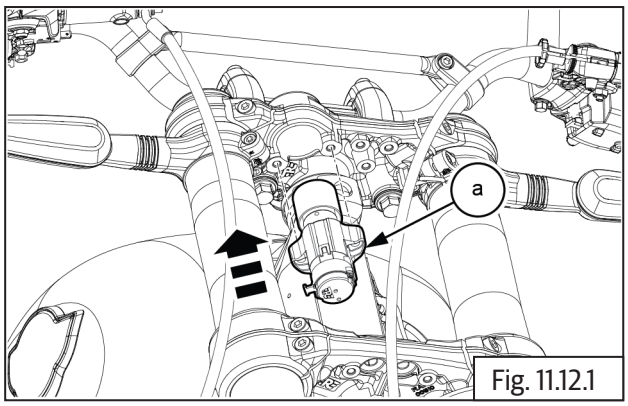

Fig. 11.12.1

- Locate and tighten 2 Nos. Hex socket head bolts **(M6) (a)** located below cluster bracket on LH and RH.

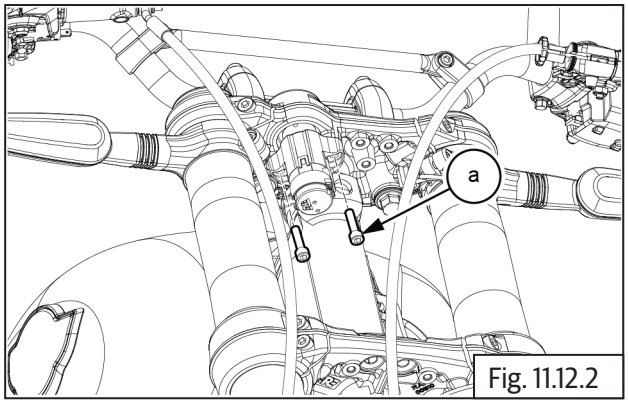

Fig. 11.12.2

	5 mm Allen socket with Ratchet
	9- 12 Nm / 0.9 - 1.2 kgf-m

- Connect ignition coil connector LH and RH **(a)** from wiring harness located below fuel tank.

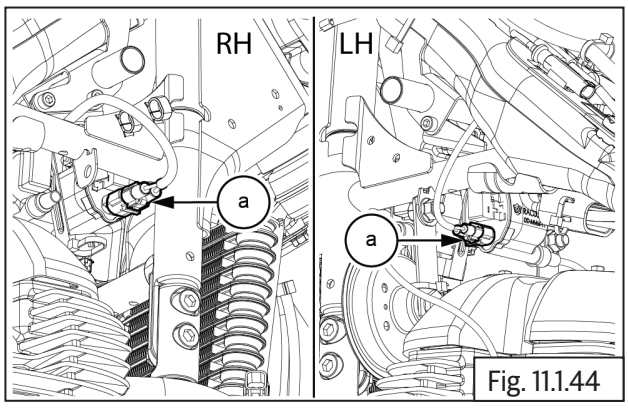

Fig. 11.1.44

11.25 Cluster Assembly

- Insert cluster bracket **(a)** into upper yoke.

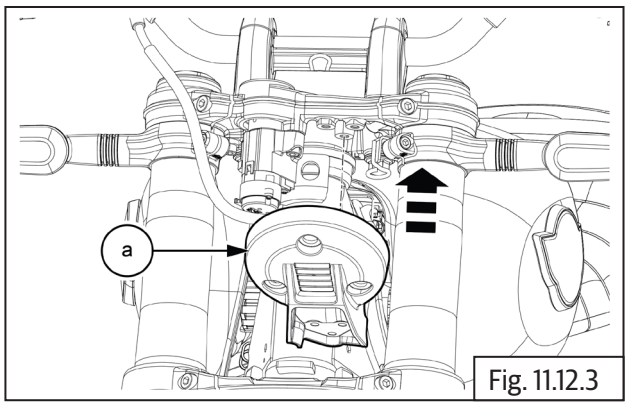

Fig. 11.12.3

- Locate and tighten 3 Nos. Hex socket head bolts **(M6) (a)** into LH and RH of cluster bracket.

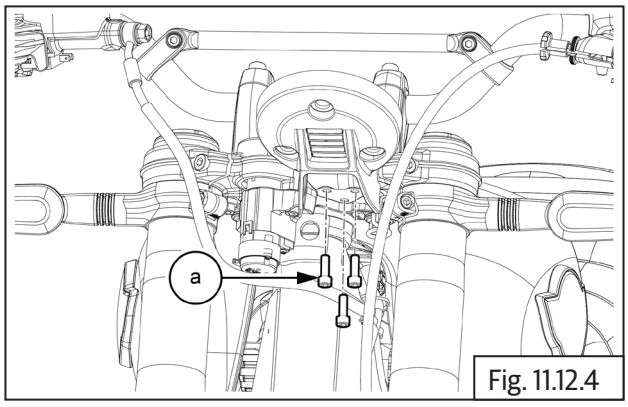

Fig. 11.12.4

	5 mm Allen socket with Ratchet
	6- 10 Nm / 0.6 - 1.0 kgf-m

- Locate ignition key set **(a)** into cluster bracket.

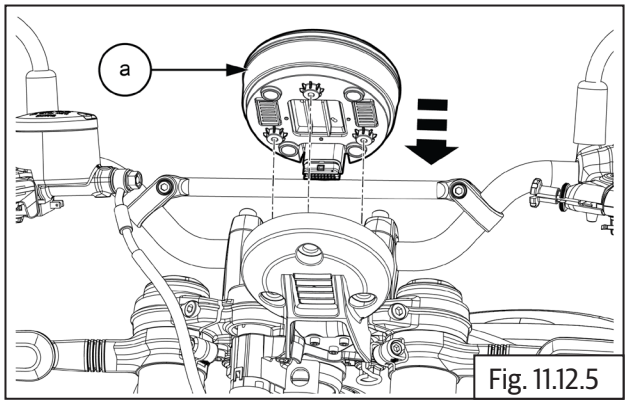

Fig. 11.12.5

- Insert and tighten 3 Nos. allen bolt **(a)**, compression limiter **(b)** and grommet **(c)**.

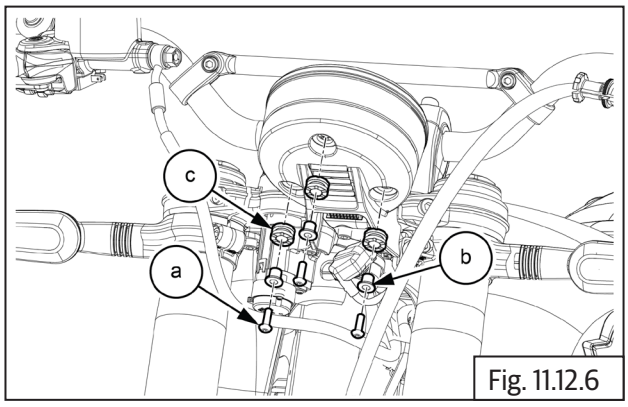

Fig. 11.12.6

	3 mm Allen socket with Ratchet
	2- 4 Nm / 0.2 - 0.4 kgf-m

- Locate the cluster connert **(a)** into the vehicle

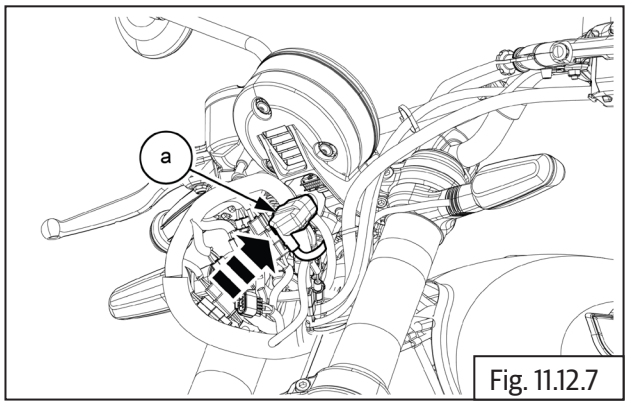

Fig. 11.12.7

- Connect cluster connection (Refer-------).

11.26 Direction Trafficators into Head-lamp Holder

- Locate the RH trafficator **(a)** on fork.

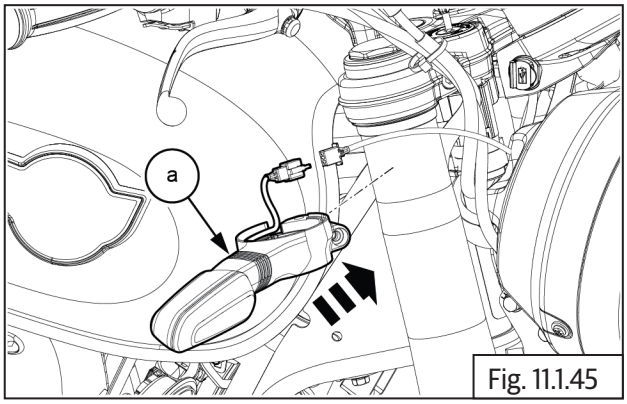

Fig. 11.1.45

- Reconnect the trafficator connector **(a)**.

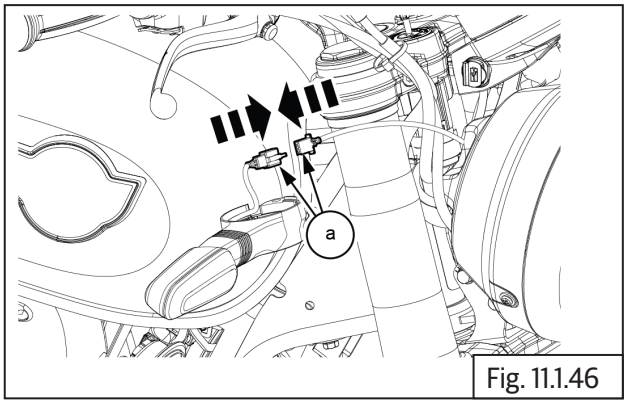

Fig. 11.1.46

- Locate and tighten Hex nut **(M12) (a)** on RH direction trafficator.

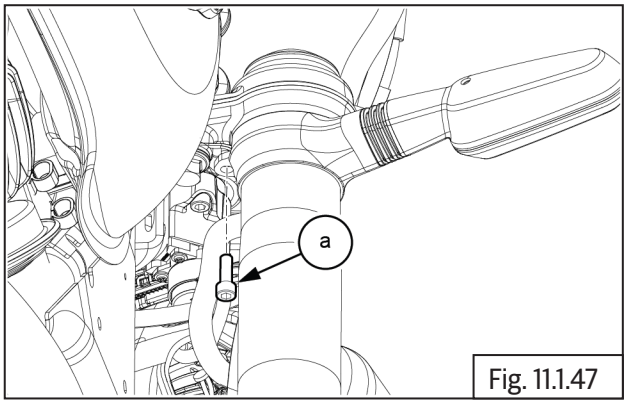

Fig. 11.1.47

	5 mm Allen socket with Ratchet
	3- 5 Nm / 0.3 - 0.5 kgf-m

- Locate and tighten Hex nut **(M12) (a)** on RH direction trafficator.

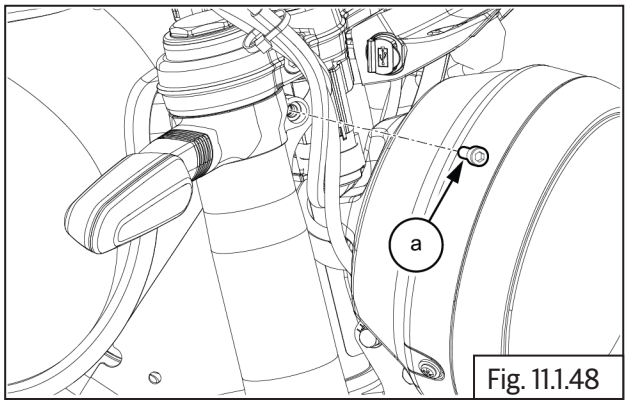

Fig. 11.1.48

	5 mm Allen socket with Ratchet
	23- 27 Nm / 2.3 - 2.7 kgf-m

11.27 USB C type adaptor

- Locate the USB adapter **(a)** on the vehicle.

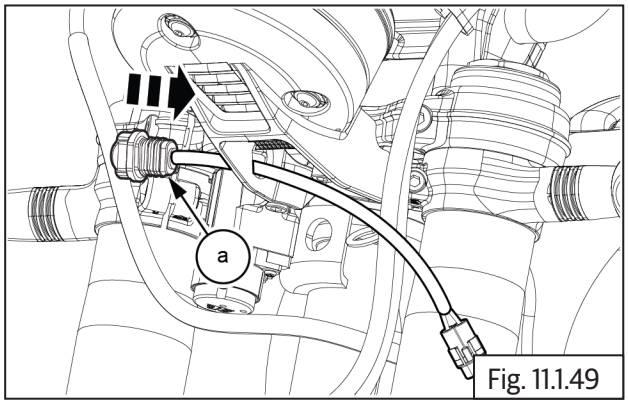

Fig. 11.1.49

- Locate and tighten lock nut **(M4) (b)** with washer **(a)** on USB adapter.

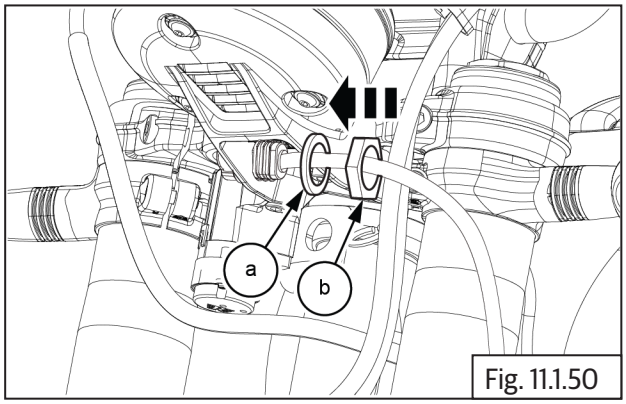

Fig. 11.1.50

- Locate USB cap **(a)** on USB adapter.

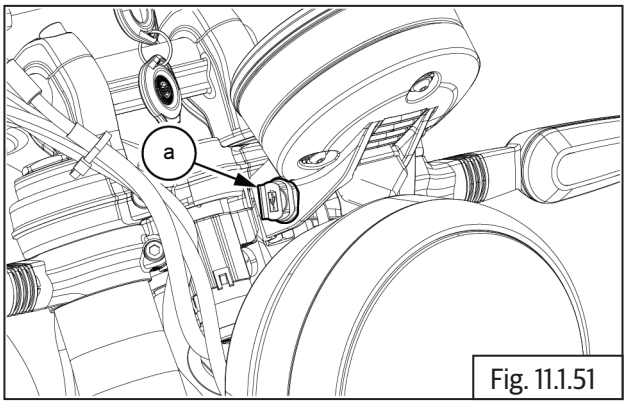

Fig. 11.1.51

11.28 Headlamp Reflector from Housing

- Locate and tighten 2 Nos allen bolt **(a)** and nut **(b)** on T-stem.

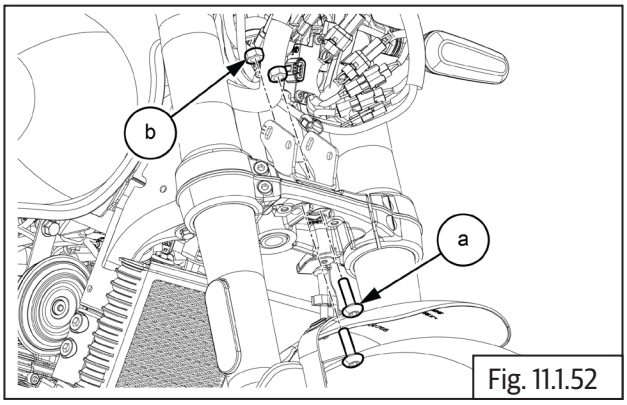

Fig. 11.1.52

	6 mm Allen socket with ratchet
	23- 27 Nm / 2.3 - 2.7 kgf-m

- Locate the cowel **(a)** on the vehicle.

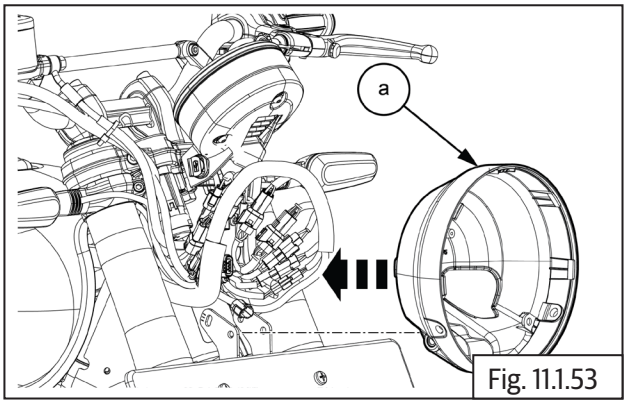

Fig. 11.1.53

- Locate and tighten 2 Nos. bolts on LH **(a)** and RH from cowel clamp **(b)**.

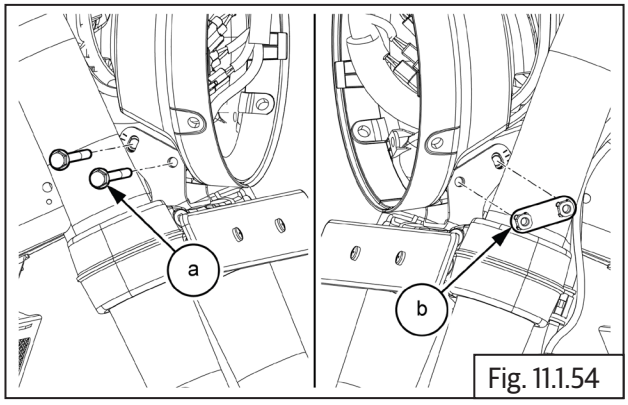

Fig. 11.1.54

	10 mm Socket with ratchet/ T-rod
	9- 12 Nm / 0.9 - 1.2 kgf-m

- Locate cowel cover **(a)** on vehicle.

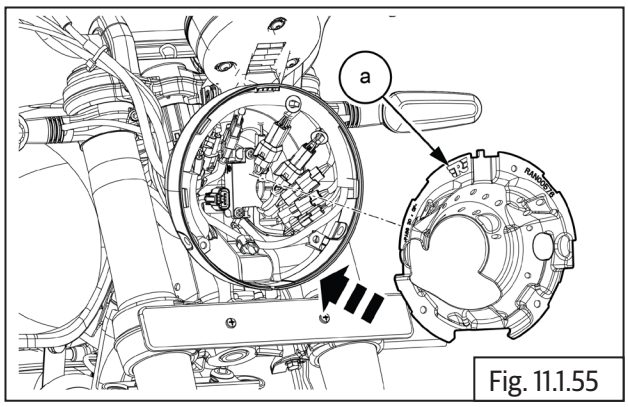

Fig. 11.1.55

- Locate and press the 2 Nos. rivet **(a)** on cowel.

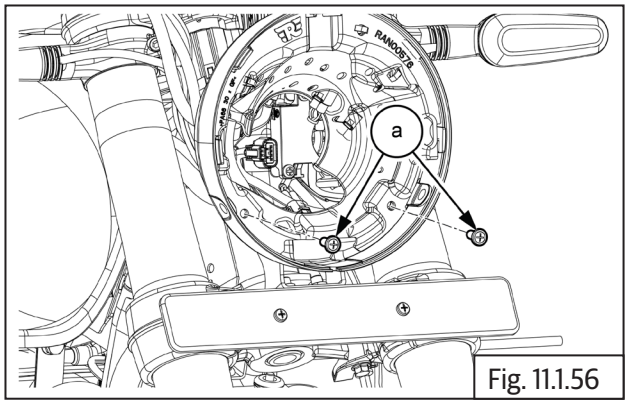

Fig. 11.1.56

- Locate the headlamp **(a)** on the vehicle.

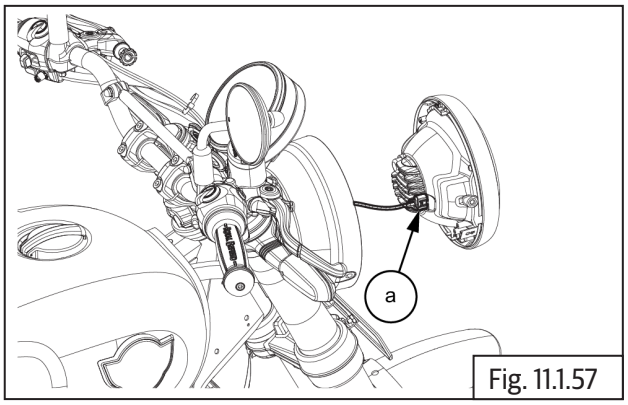

Fig. 11.1.57

- Connect the connector **(a)** on Headlamp.

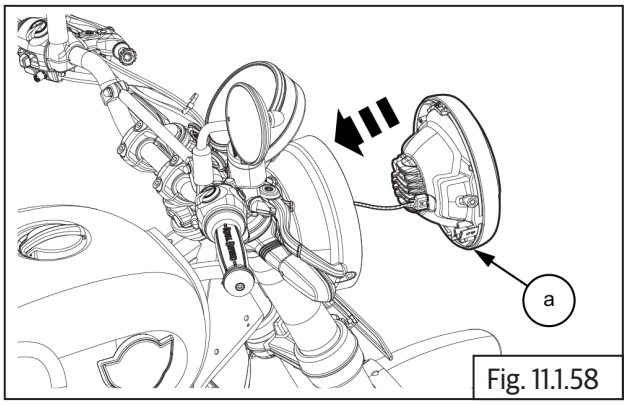

Fig. 11.1.58

- Locate and tighten 2 Nos. Phillips screw **(a)** and **(b)** on LH and RH on headlamp.

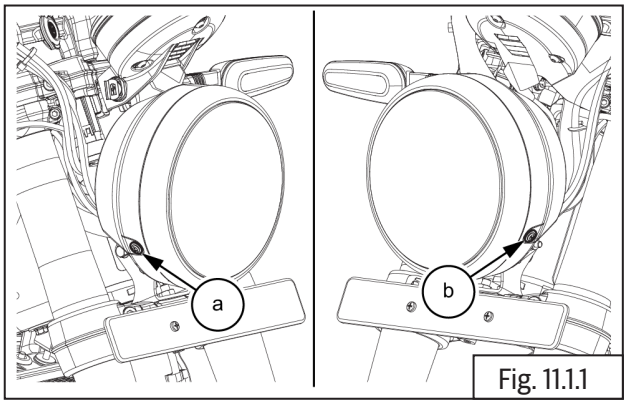

Fig. 11.1.1

	Phillips screw driver (+)
	4 Nm / 0.4 kgf-m

11.29 Battery Tray

- Locate battery tray **(a)** into frame and ensure wiring harness routing is accurately connected into battery bracket.

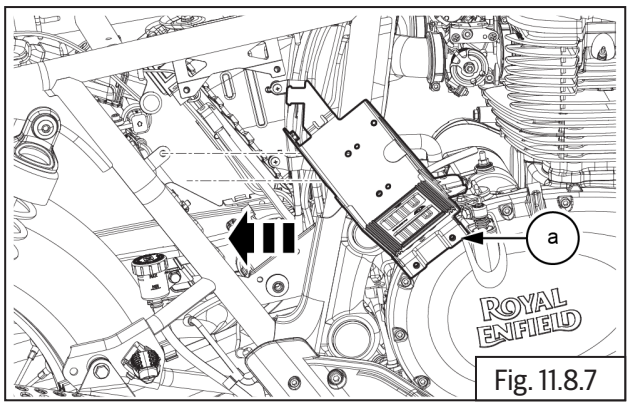

Fig. 11.8.7

- Locate and tighten 2 Nos. Hex head collar bolt **(M6) (a)** on frame RH.

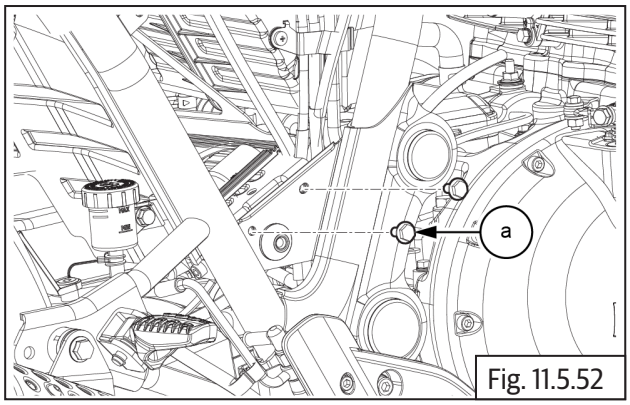

Fig. 11.5.52

	10 mm Socket with Ratchet
Torque	8-12Nm / 0.8 - 1.2kgf-m

11.30 Utility Box

- Locate battery **(a)** on tray.

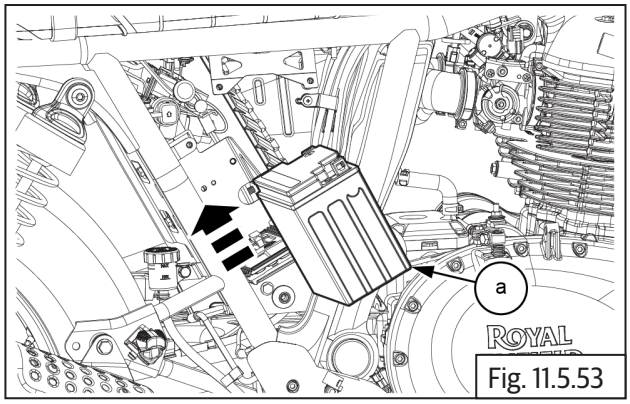

Fig. 11.5.53

- Locate battery bracket **(a)** on tray.

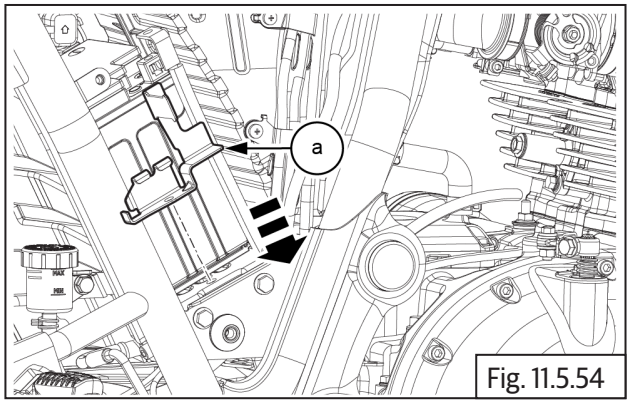

Fig. 11.5.54

- Locate and tighten Hex flanged head screw **(M6) (a)** on battery strap bracket.

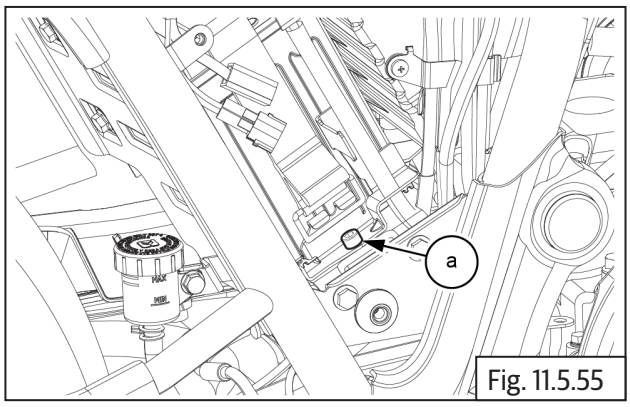

Fig. 11.5.55

	5 mm Allen socket with ratchet
Torque	8-12Nm / 0.8 - 1.2kgf-m

- Locate battery strap (belt) **(a)** and lock the strap lock on battery strap bracket.

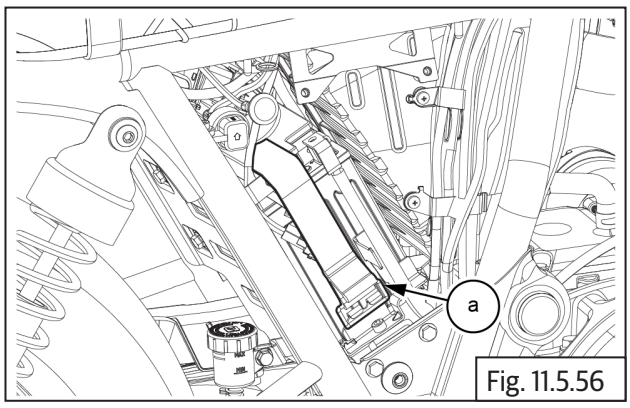

Fig. 11.5.56

- Connect battery positive (+) terminal **(a)** on battery.

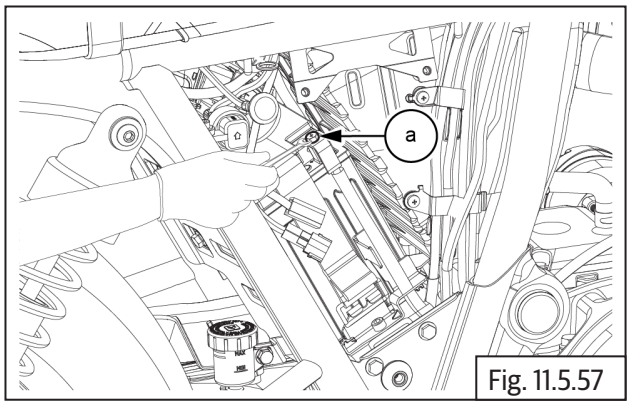

Fig. 11.5.57

	10 mm Double end spanner
	3-4Nm / 0.3 - 0.4kgf-m

- Locate and tighten 3 Nos. Hex head bolts **(M6) (a)** on tool holder.

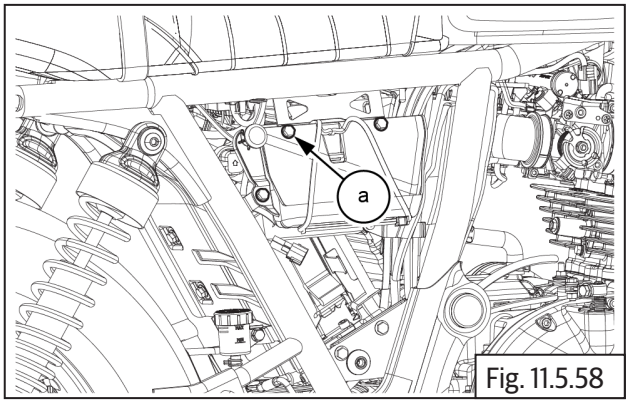

Fig. 11.5.58

	10 mm Double end spanner
	3-5Nm / 0.3 - 0.5kgf-m

- Clean and apply recommended agents on battery terminals.

ELECTRICAL SCHEMATICS

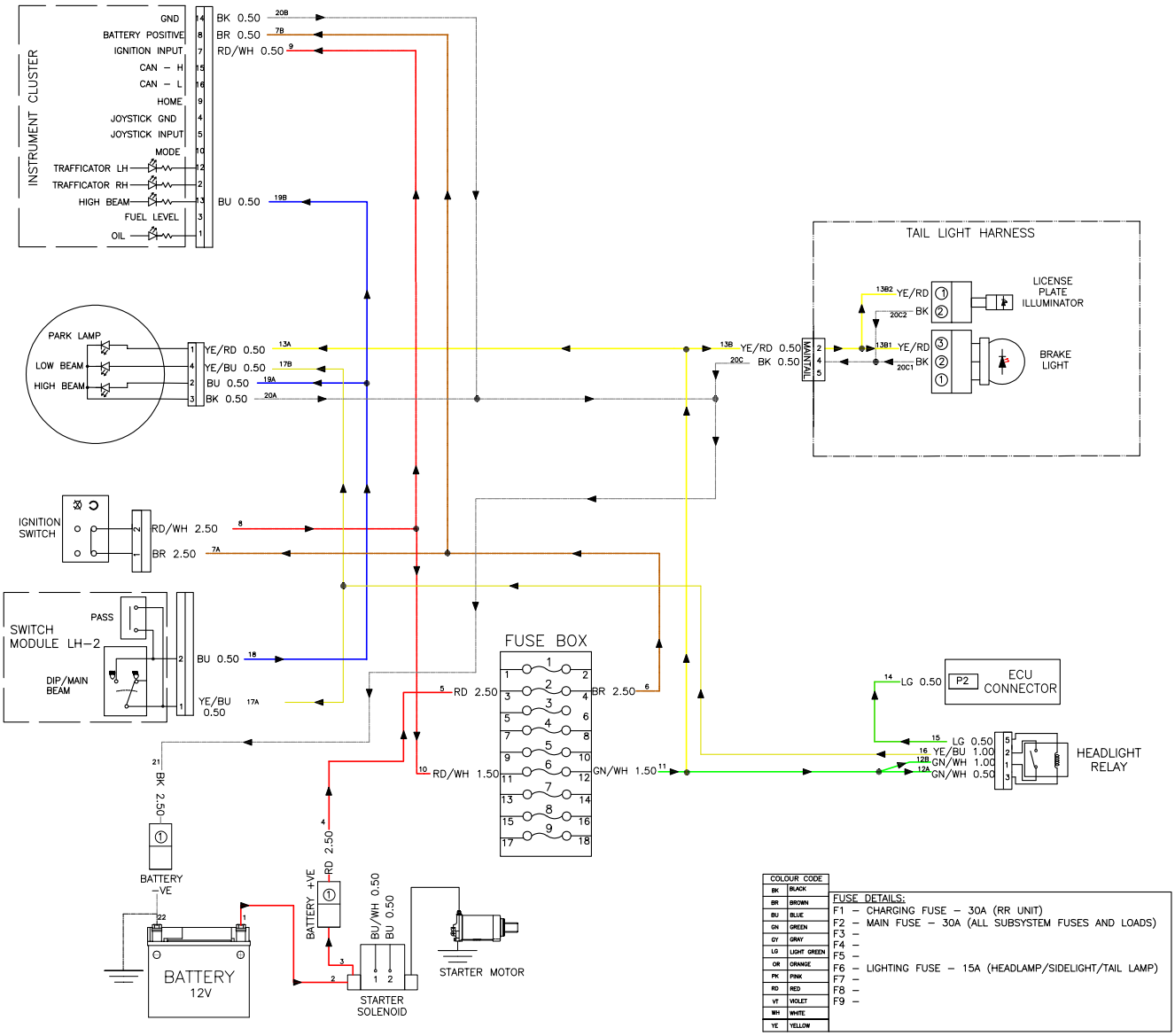
INSTRUMENT CLUSTER
GND
BATTERY POSITIVE
IGNITION INPUT
CAN – H
CAN – L
HOME
JOYSTICK GND
JOYSTICK INPUT
MODE
TRAFFICATOR LH
TRAFFICATOR RH
HIGH BEAM
FUEL LEVEL
OIL
BK 0.50
BR 0.50
RD/WH 0.50
BU 0.50
TAIL LIGHT HARNESS
LICENSE PLATE ILLUMINATOR
BRAKE LIGHT
YE/RD
BK
MAINTAIL
PARK LAMP
LOW BEAM
HIGH BEAM
YE/RD 0.50
YE/BU 0.50
BU 0.50
BK 0.50
IGNITION SWITCH
RD/WH 2.50
BR 2.50
SWITCH MODULE LH–2
PASS
DIP/MAIN BEAM
BU 0.50
YE/BU 0.50
FUSE BOX
RD 2.50
BR 2.50
RD/WH 1.50
GN/WH 1.50
ECU CONNECTOR
P2
LG 0.50
YE/BU 1.00
GN/WH 1.00
GN/WH 0.50
HEADLIGHT RELAY
BK 2.50
BATTERY –VE
BATTERY 12V
BATTERY +VE
RD 2.50
BU/WH 0.50
BU 0.50
STARTER SOLENOID
STARTER MOTOR
COLOUR CODE
BK BLACK
BR BROWN
BU BLUE
GN GREEN
GY GRAY
LG LIGHT GREEN
OR ORANGE
PK PINK
RD RED
VT VIOLET
WH WHITE
YE YELLOW
FUSE DETAILS:
F1 – CHARGING FUSE – 30A (RR UNIT)
F2 – MAIN FUSE – 30A (ALL SUBSYSTEM FUSES AND LOADS)
F3 –
F4 –
F5 –
F6 – LIGHTING FUSE – 15A (HEADLAMP/SIDELIGHT/TAIL LAMP)
F7 –
F8 –
F9 –

ABS System

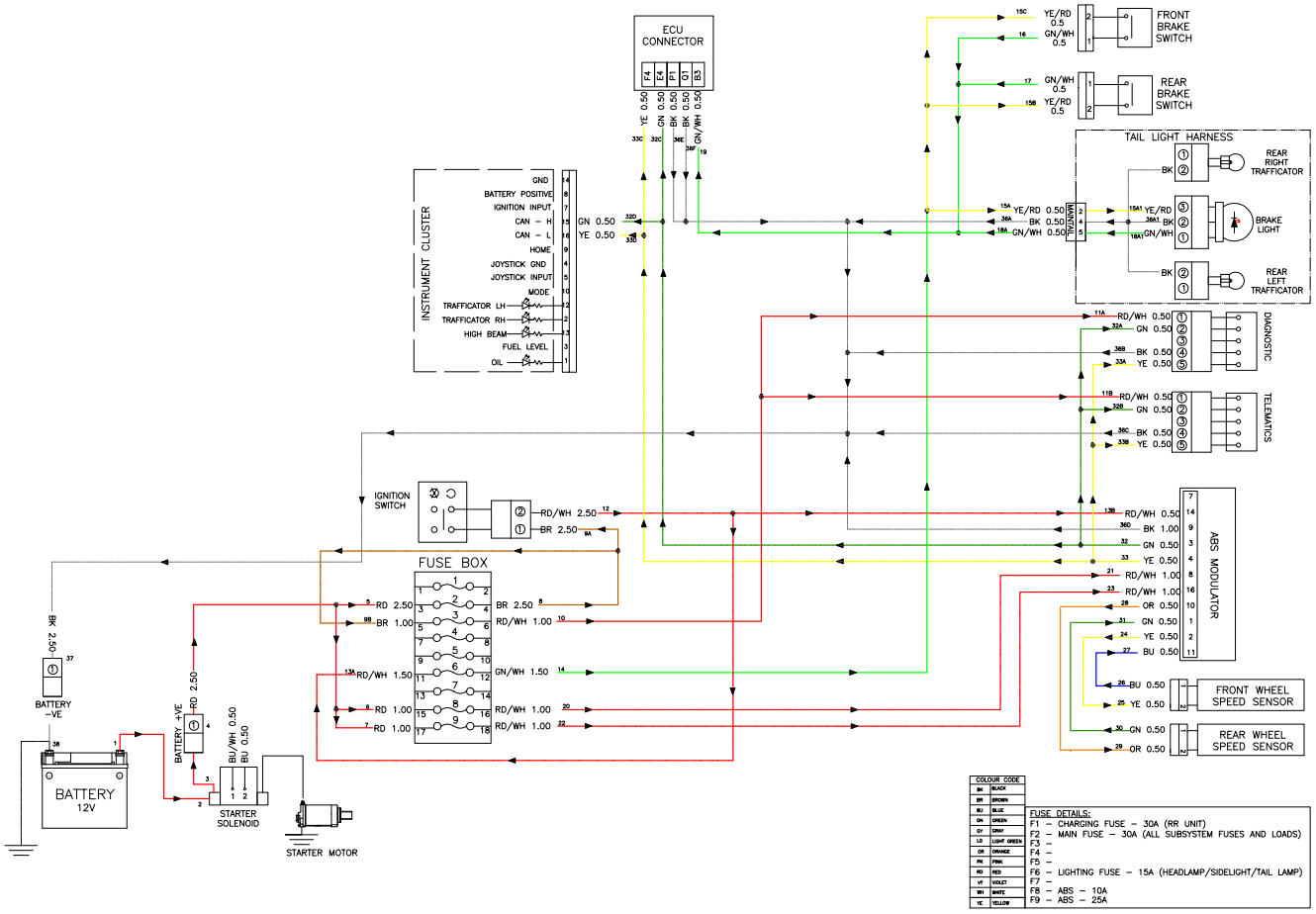
ECU CONNECTOR
F4
E4
P1
O1
B3
INSTRUMENT CLUSTER
GND
BATTERY POSITIVE
IGNITION INPUT
CAN – H
CAN – L
HOME
JOYSTICK GND
JOYSTICK INPUT
MODE
TRAFFICATOR LH
TRAFFICATOR RH
HIGH BEAM
FUEL LEVEL
OIL
GN 0.50
YE 0.50
FRONT BRAKE SWITCH
REAR BRAKE SWITCH
TAIL LIGHT HARNESS
REAR RIGHT TRAFFICATOR
BRAKE LIGHT
REAR LEFT TRAFFICATOR
DIAGNOSTIC
TELEMATICS
IGNITION SWITCH
FUSE BOX
ABS MODULATOR
FRONT WHEEL SPEED SENSOR
REAR WHEEL SPEED SENSOR
BATTERY –VE
BATTERY 12V
BATTERY +VE
STARTER SOLENOID
STARTER MOTOR
COLOUR CODE
FUSE DETAILS:
F1 – CHARGING FUSE – 30A (RR UNIT)
F2 – MAIN FUSE – 30A (ALL SUBSYSTEM FUSES AND LOADS)
F3 –
F4 –
F5 –
F6 – LIGHTING FUSE – 15A (HEADLAMP/SIDELIGHT/TAIL LAMP)
F7 –
F8 – ABS – 10A
F9 – ABS – 25A

Accessory Circuit

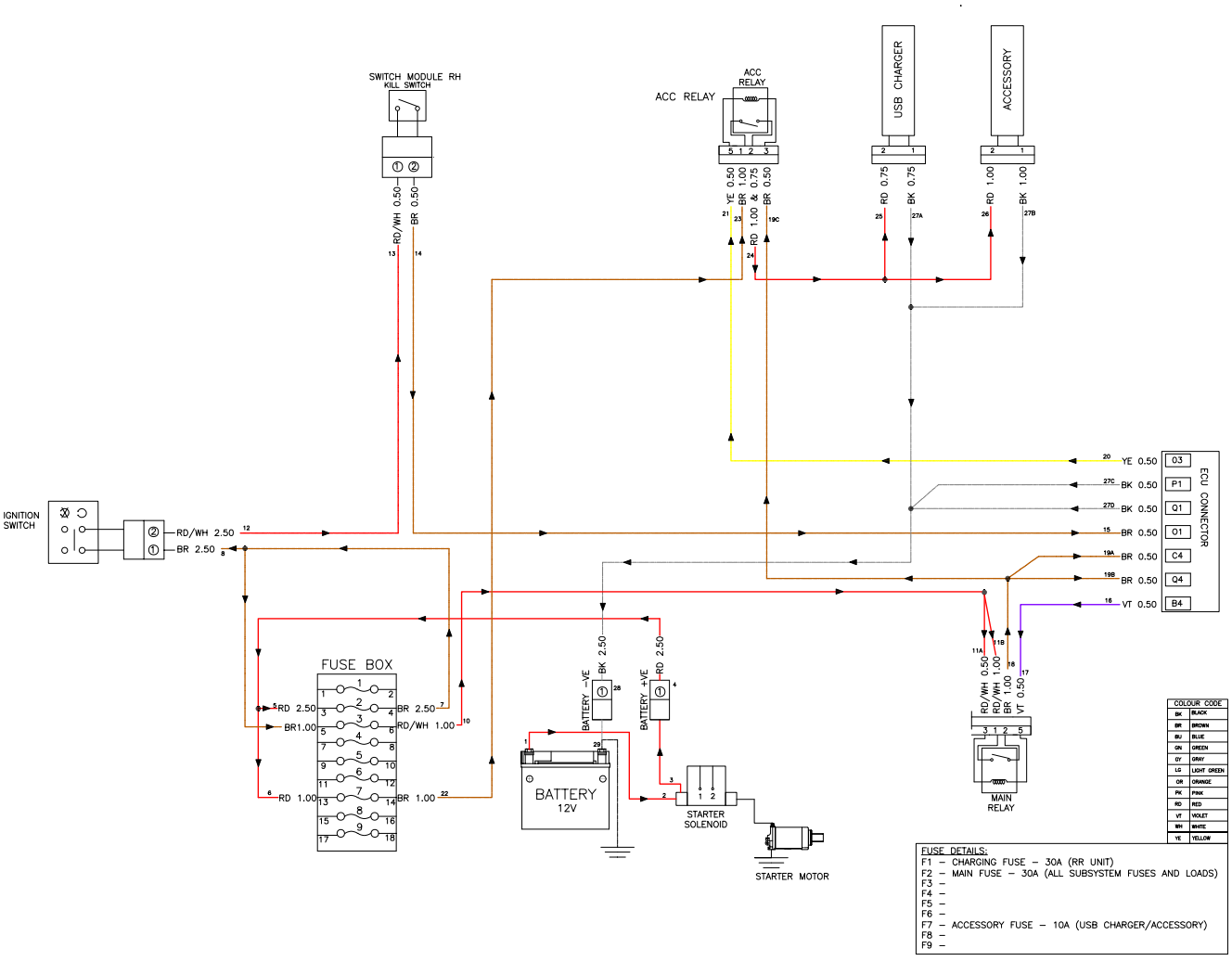

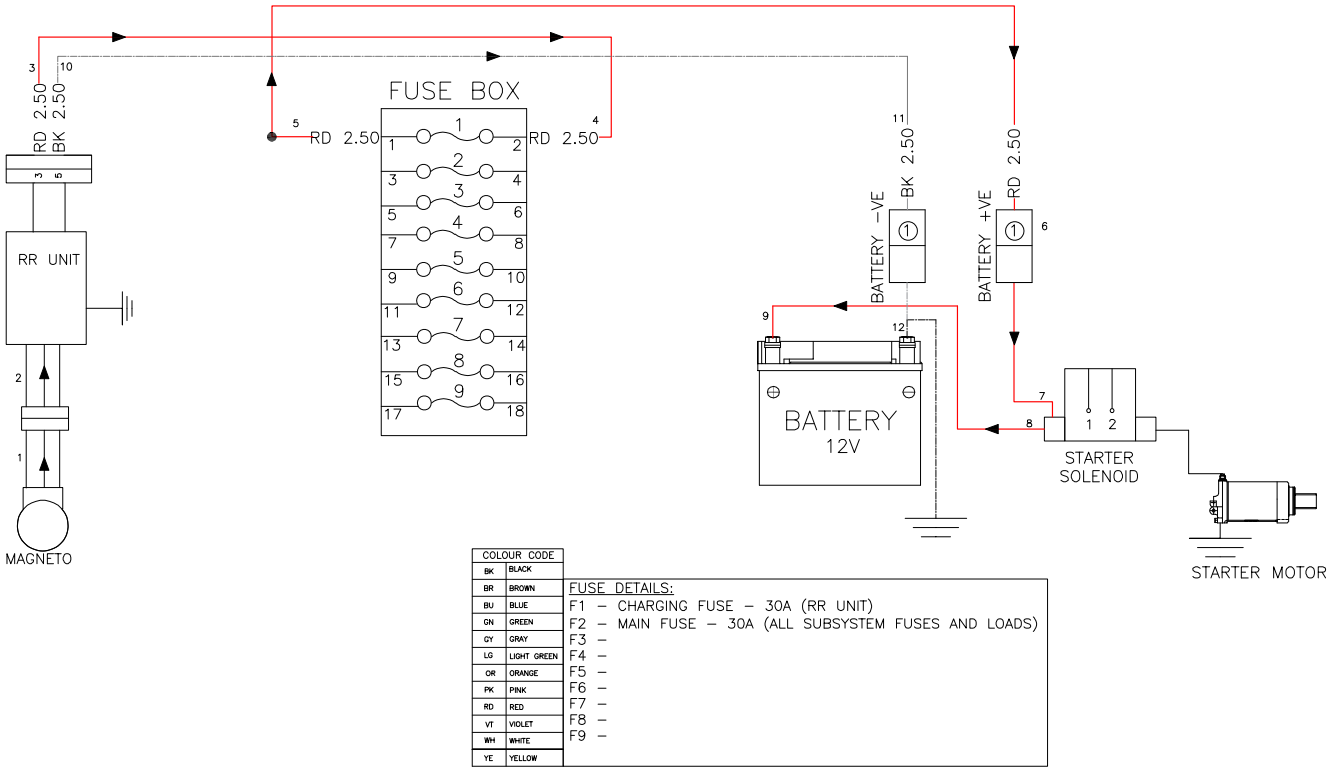

COLOUR CODE	
BK	BLACK
BR	BROWN
BU	BLUE
GN	GREEN
GY	GRAY
LG	LIGHT GREEN
OR	ORANGE
PK	PINK
RD	RED
VT	VIOLET
WH	WHITE
YE	YELLOW

FUSE DETAILS:
F1 – CHARGING FUSE – 30A (RR UNIT)
F2 – MAIN FUSE – 30A (ALL SUBSYSTEM FUSES AND LOADS)
F3 –
F4 –
F5 –
F6 –
F7 –
F8 –
F9 –

Horn System

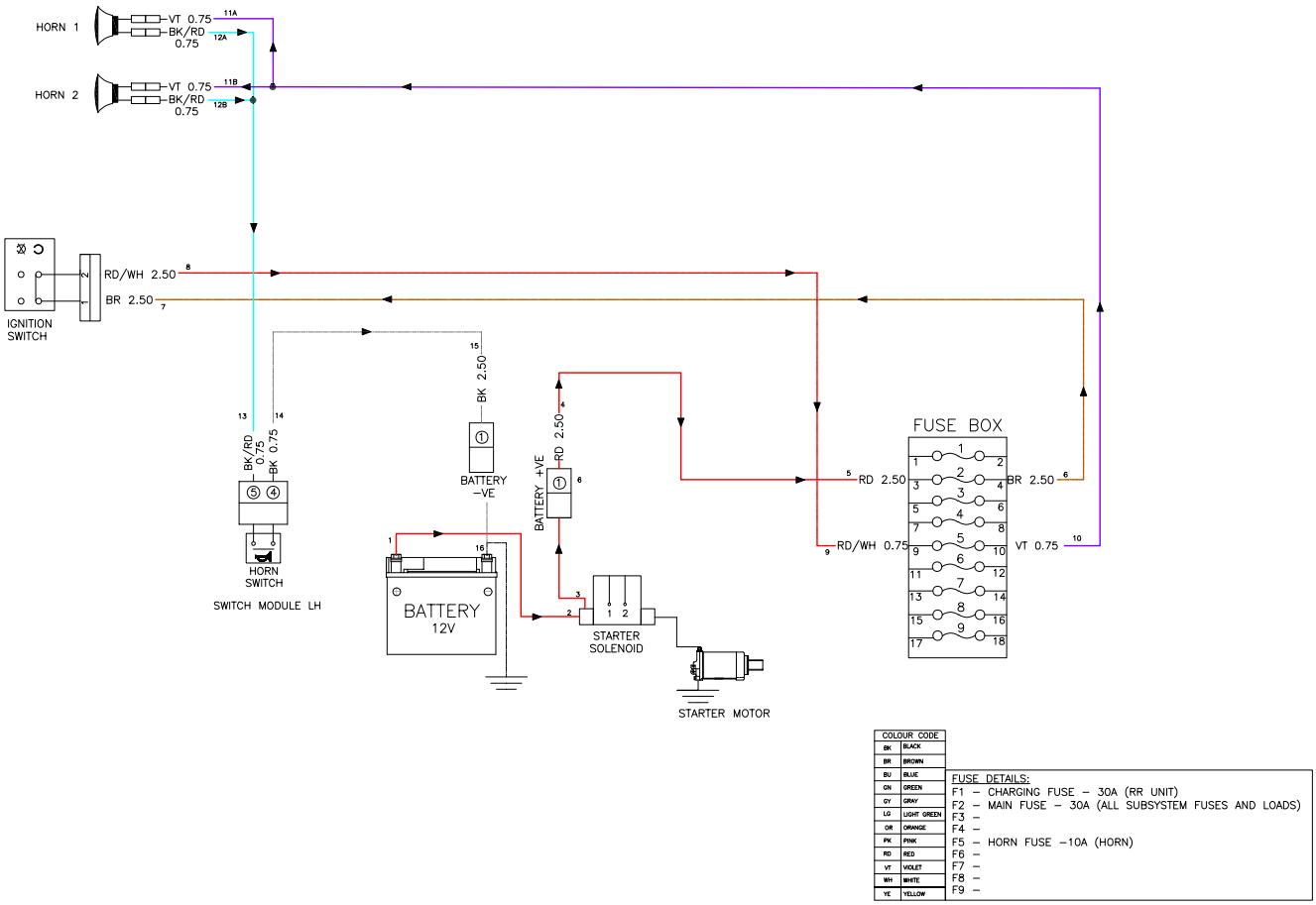

COLOUR CODE	
BK	BLACK
BR	BROWN
BU	BLUE
GN	GREEN
GY	GRAY
LG	LIGHT GREEN
OR	ORANGE
PK	PINK
RD	RED
VT	VIOLET
WH	WHITE
YE	YELLOW

FUSE DETAILS:
F1 – CHARGING FUSE – 30A (RR UNIT)
F2 – MAIN FUSE – 30A (ALL SUBSYSTEM FUSES AND LOADS)
F3 –
F4 –
F5 – HORN FUSE –10A (HORN)
F6 –
F7 –
F8 –
F9 –

Ignition System

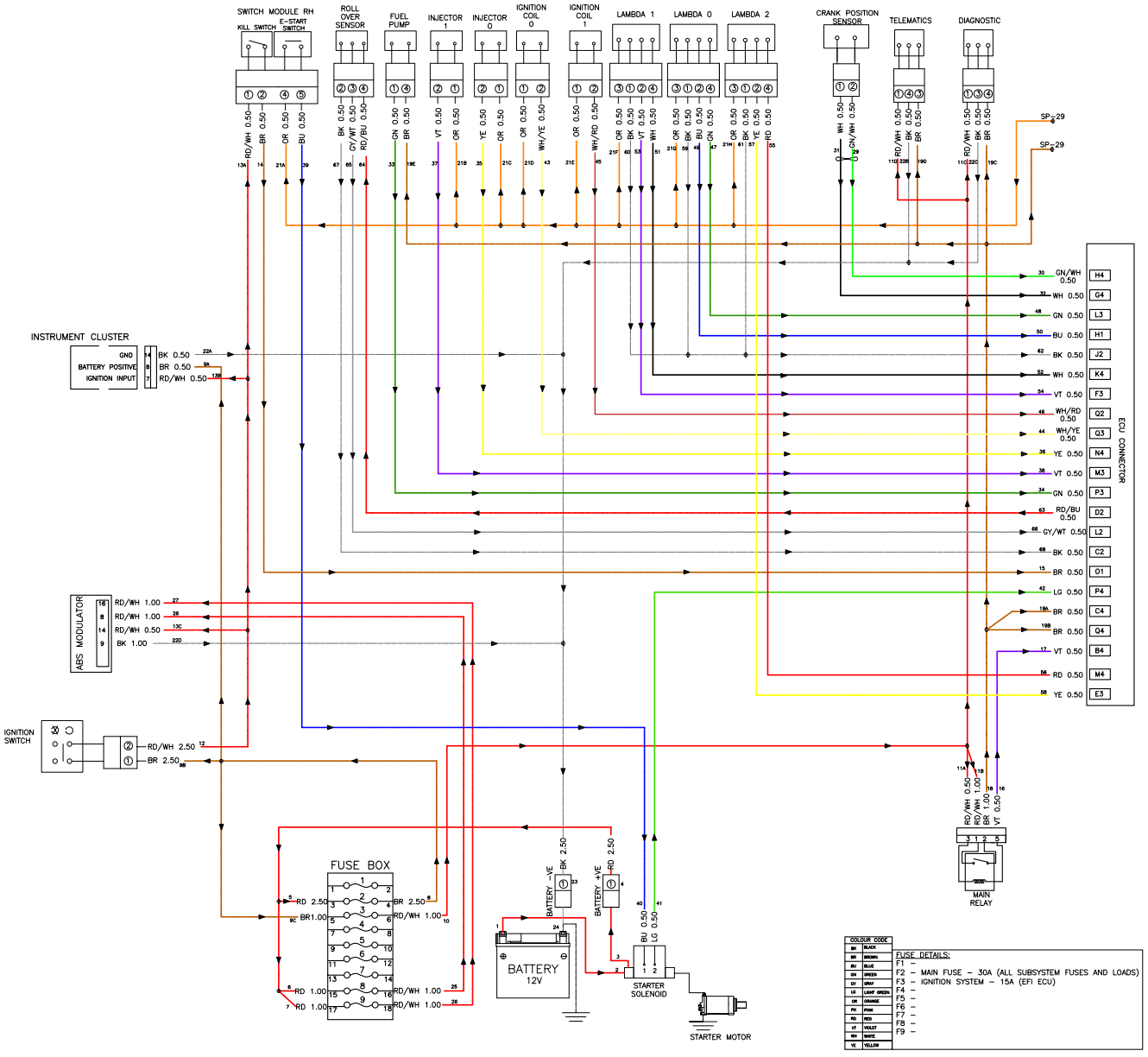

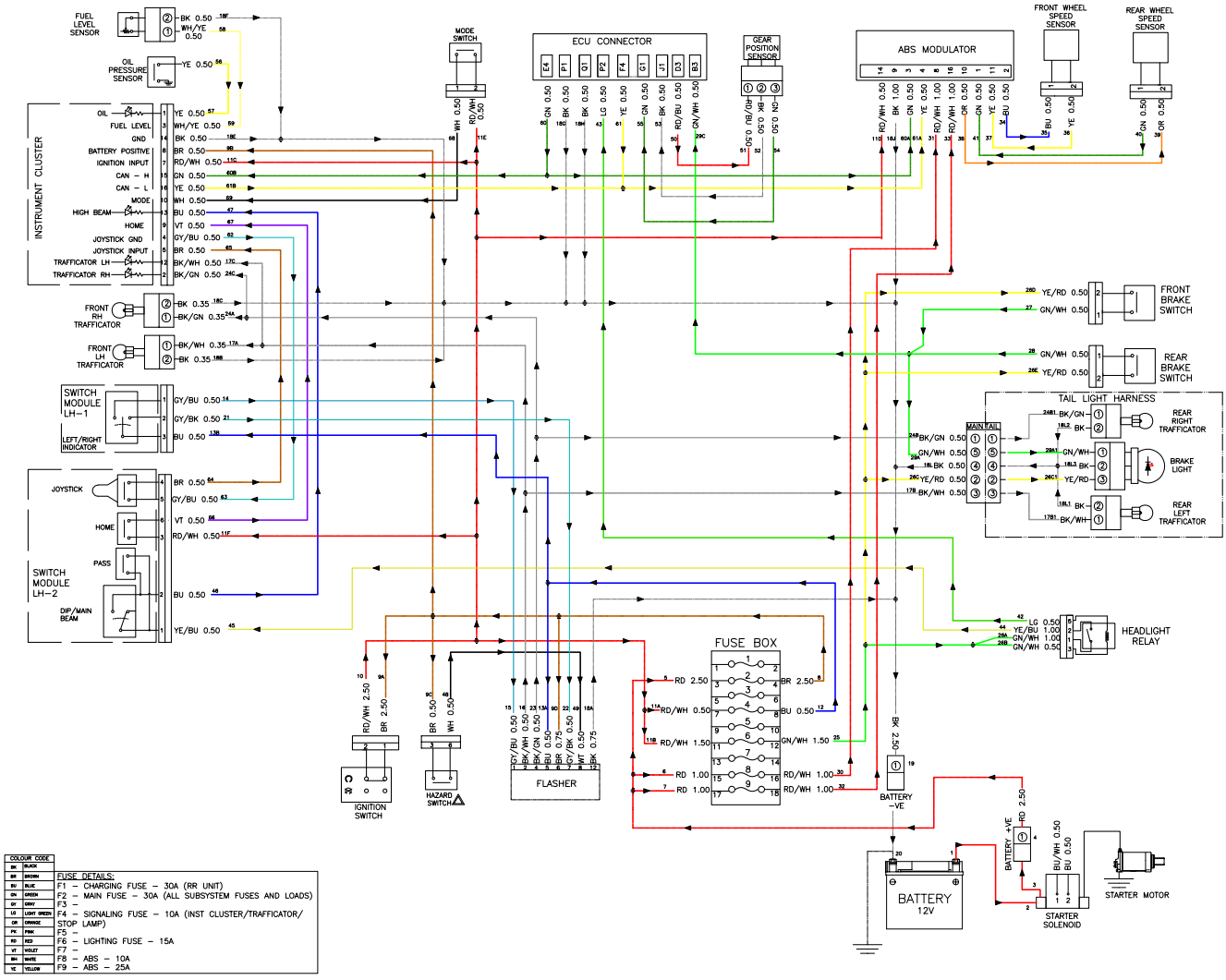

COLOUR CODE	
BK	BLACK
BR	BROWN
BU	BLUE
GN	GREEN
GY	GREY
LG	LIGHT GREEN
OR	ORANGE
PK	PINK
RD	RED
VT	VIOLET
WH	WHITE
YE	YELLOW

FUSE DETAILS:
F1 – CHARGING FUSE – 30A (RR UNIT)
F2 – MAIN FUSE – 30A (ALL SUBSYSTEM FUSES AND LOADS)
F3 –
F4 – SIGNALING FUSE – 10A (INST CLUSTER/TRAFFICATOR/ STOP LAMP)
F5 –
F6 – LIGHTING FUSE – 15A
F7 –
F8 – ABS – 10A
F9 – ABS – 25A

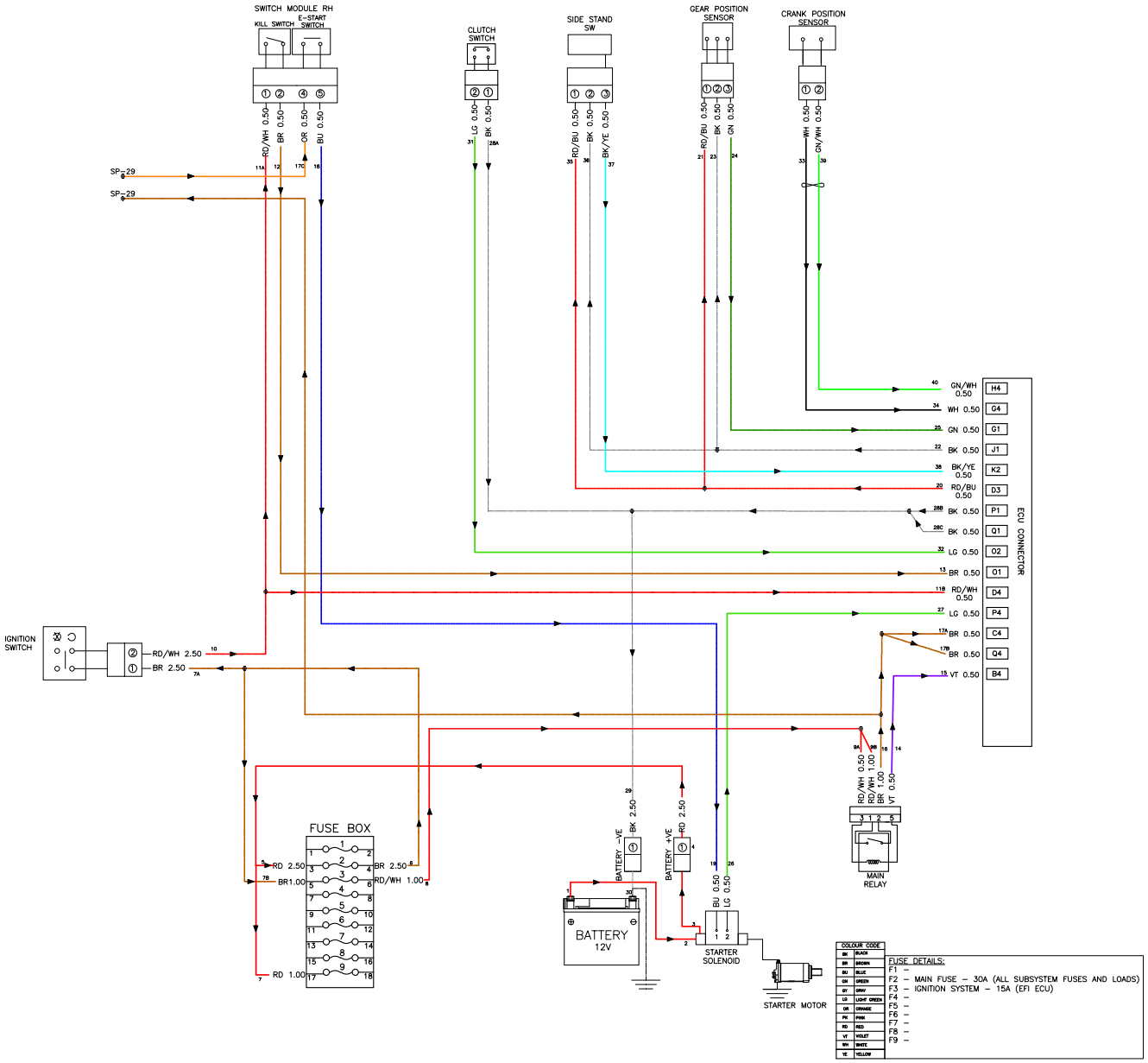
SWITCH MODULE RH
KILL SWITCH
E-START SWITCH
CLUTCH SWITCH
SIDE STAND SW
GEAR POSITION SENSOR
CRANK POSITION SENSOR
RD/WH 0.50
BR 0.50
OR 0.50
BU 0.50
LG 0.50
BK 0.50
RD/BU 0.50
BK/YE 0.50
GN 0.50
WH 0.50
GN/WH 0.50
SP 29
SP 29
ECU CONNECTOR
GN/WH 0.50 H4
WH 0.50 G4
GN 0.50 G1
BK 0.50 J1
BK/YE 0.50 K2
RD/BU 0.50 D3
BK 0.50 P1
BK 0.50 Q1
LG 0.50 O2
BR 0.50 O1
RD/WH 0.50 D4
LG 0.50 P4
BR 0.50 C4
BR 0.50 Q4
VT 0.50 B4
IGNITION SWITCH
RD/WH 2.50
BR 2.50
FUSE BOX
RD 2.50
BR 2.50
BR1.00
RD/WH 1.00
RD 1.00
BATTERY -VE
BK 2.50
BATTERY +VE
RD 2.50
BATTERY 12V
STARTER SOLENOID
STARTER MOTOR
RD/WH 0.50
RD/WH 1.00
BR 1.00
VT 0.50
MAIN RELAY
BU 0.50
LG 0.50
COLOUR CODE
BK BLACK
BR BROWN
BU BLUE
GN GREEN
GY GREY
LG LIGHT GREEN
OR ORANGE
PK PINK
RD RED
VT VIOLET
WH WHITE
YE YELLOW
FUSE DETAILS:
F1 –
F2 – MAIN FUSE – 30A (ALL SUBSYSTEM FUSES AND LOADS)
F3 – IGNITION SYSTEM – 15A (EFI ECU)
F4 –
F5 –
F6 –
F7 –
F8 –
F9 –

Market Selection In Interceptor Bear 650 Tripper Dash

CONTENTS **PAGE**

12. Cluster Country Selection.....778

12.1. DOL Software version installation 778

12.2. Software update to ECU.....782

12.3. Countries, units & second service reminders 785

12. Cluster Country selection:

Instructions:

- If already DOL software is installed in your computer, proceed with **Software update to ECU.**
- Do not disturb the Motorcycles/ Connections/ Ensure proper Internet connectivity during this process.
- Ensure you have admin rights and the firewall or anti virus software is disabled before starting the flashing.

Installation

- Installation of Program file in Laptop/ Desktop (One time Activity).
- Here we have enabled the market selection in Interceptor Bear 650 Tripper dash.
- Install and update the latest DOL software link , for further clarifications please contact your Service Manager.

12.1. DOL Software version installation:

Follow the below steps to install the DOL software:

- An exe file ROYAL ENFIELD DOL V0_17_BETA** will be downloaded, right click and select Run as administrator.

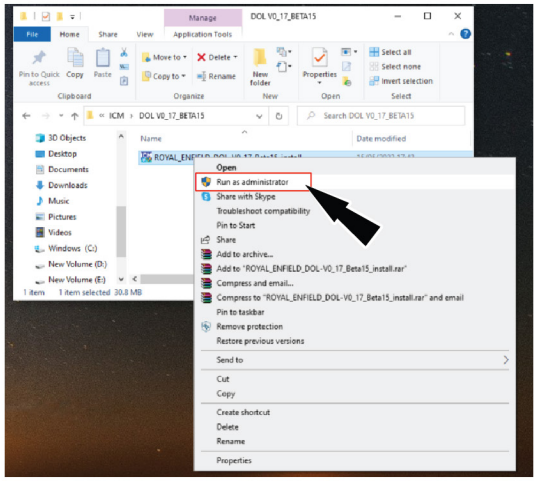

Fig. 6.3.51

- Click on More info in the below screen.



Fig. 6.3.52

- Click on Run anyway button.



Fig. 6.3.53

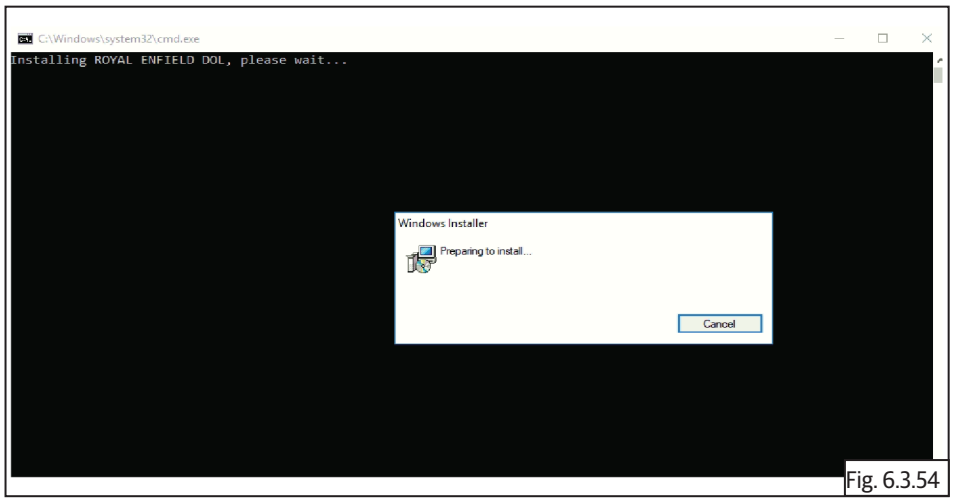

Fig. 6.3.54

- Select folder/ default it will save in the C drive.

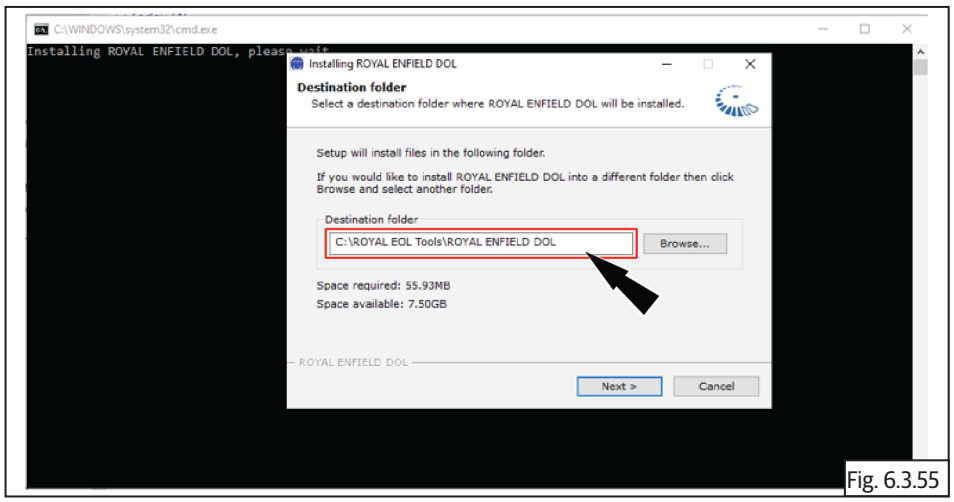

Fig. 6.3.55

- Once the software is installed, click on Finish button.



Fig. 6.3.56

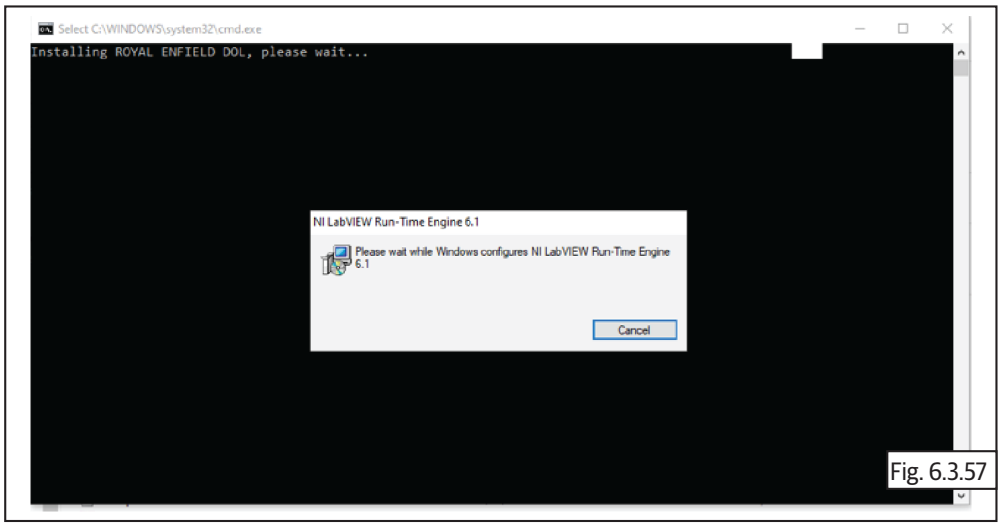

Fig. 6.3.57

- Click on Extract button.

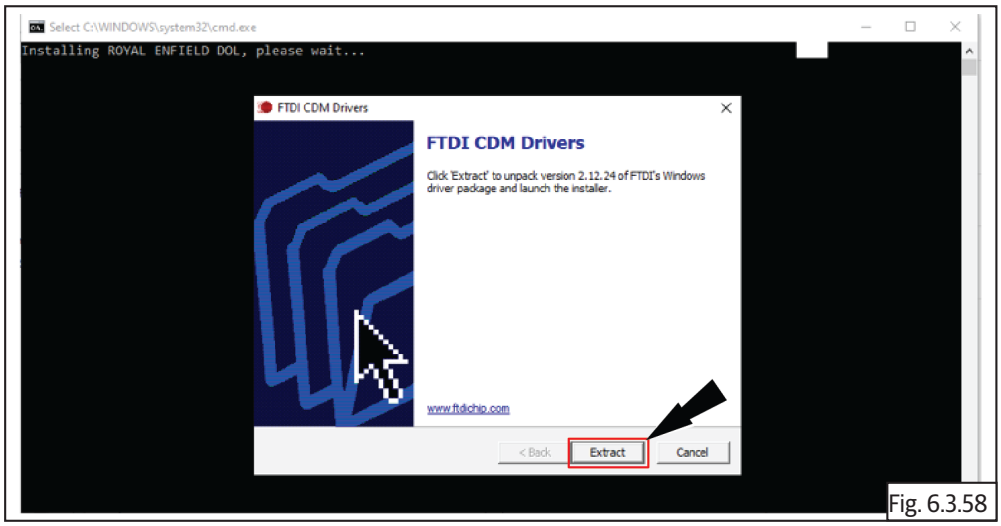

Fig. 6.3.58

- Click on Next button.

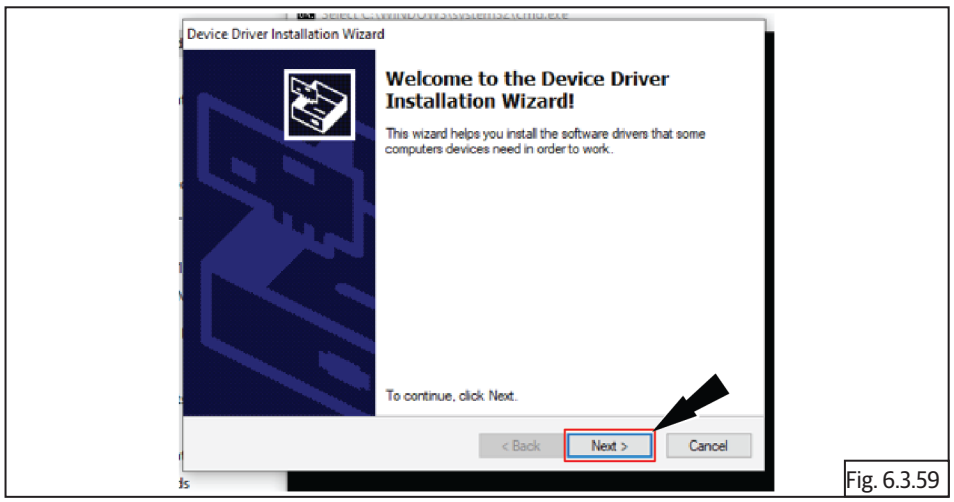

Fig. 6.3.59

- Click on Next button to get the License Agreement.

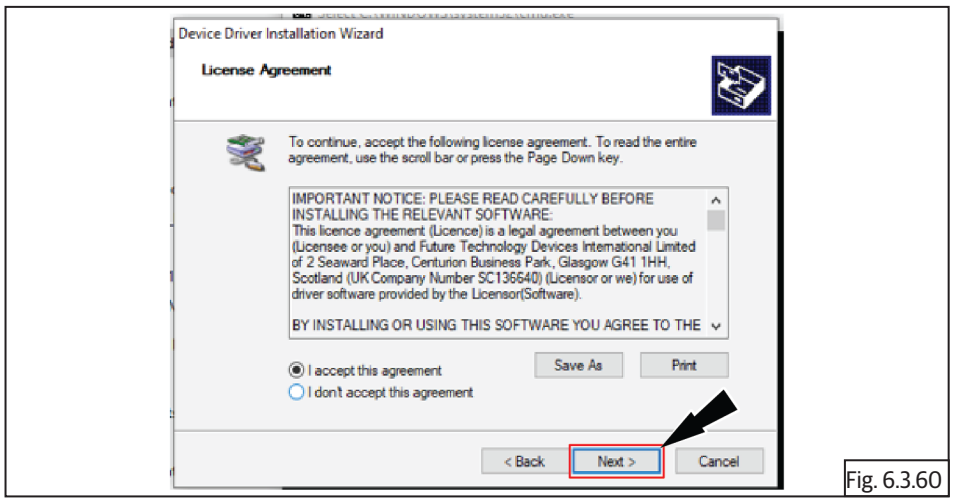

Fig. 6.3.60

- Click on Finish button after the software is installed.

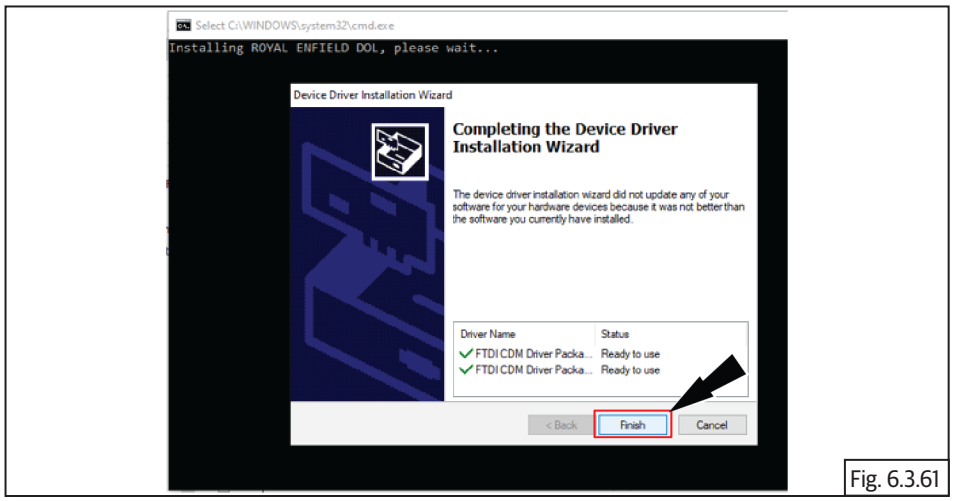

Fig. 6.3.61

- After the installation, an icon will be created on the desktop/ replace the existing.

12.2. Software update to ECU:

- After installation, connect the DOL tool to the motorcycle and the USB to the laptop/ desktop, ignition key and kill switch should be in ON condition, double click on the DOL Icon and below screen will be displayed.
- The ROYAL ENFIELD Dol V0 _17_Beta24 icon will automatically navigate and displays the model as **P3K EU-V BS-VI VTC.**

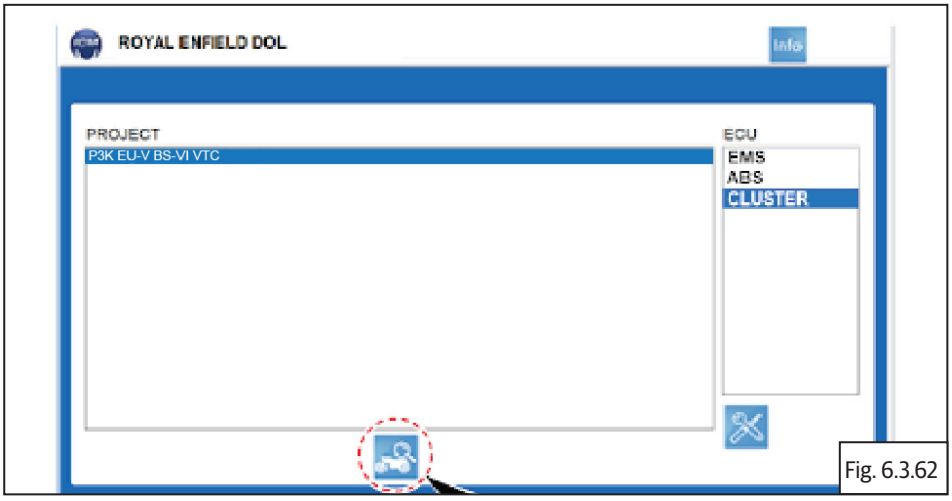

Fig. 6.3.62

- Or else select **P3K EU-V BS-VI VTC** manually and select **<Cluster>**.

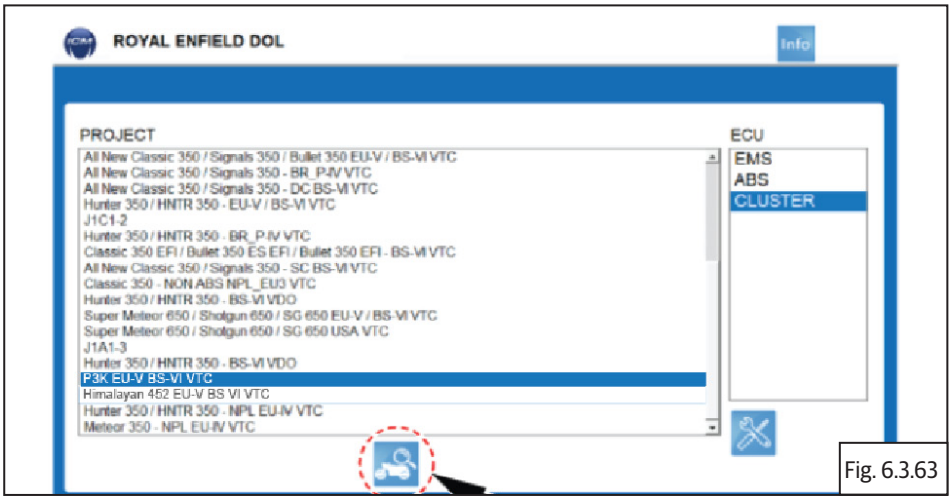

Fig. 6.3.63

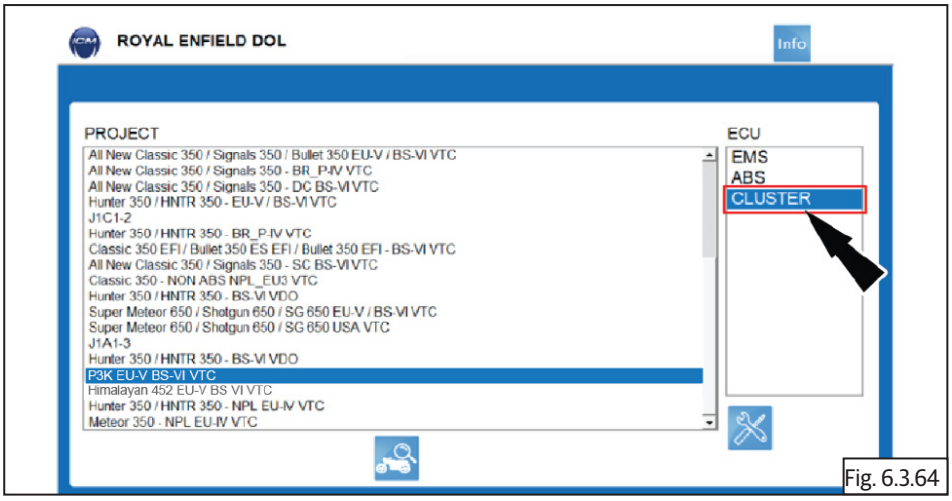

Fig. 6.3.64

- Click on DOL option.

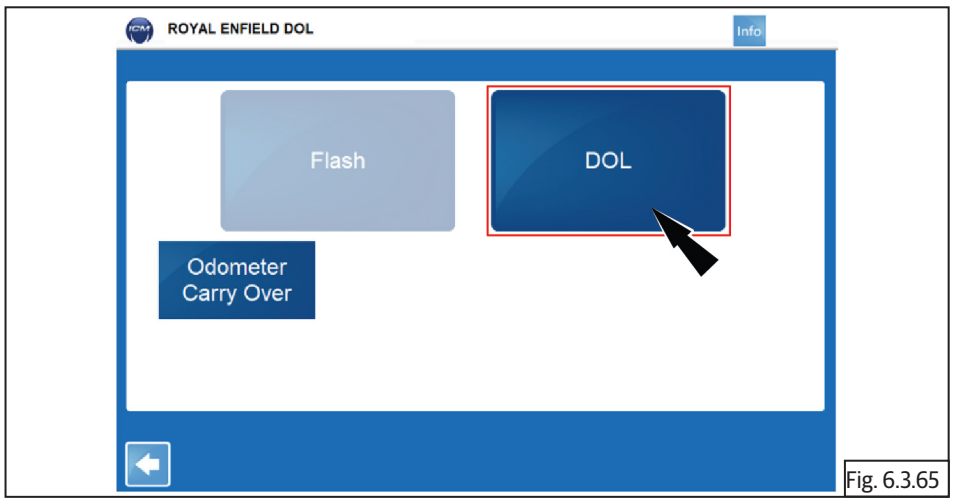

Fig. 6.3.65

- Click on the utility icon which is shown in the encircled area.

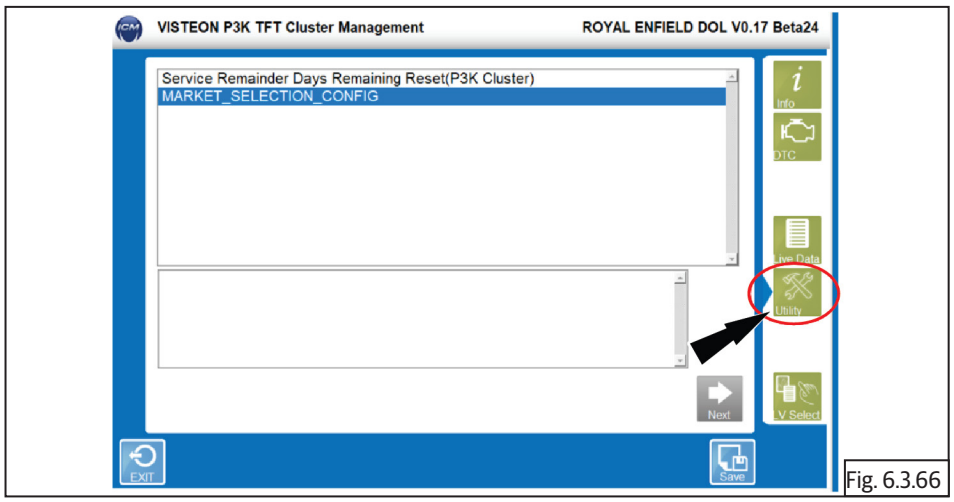

Fig. 6.3.66

- Screen will appear with list of countries once you click the **Market_selection_config**.

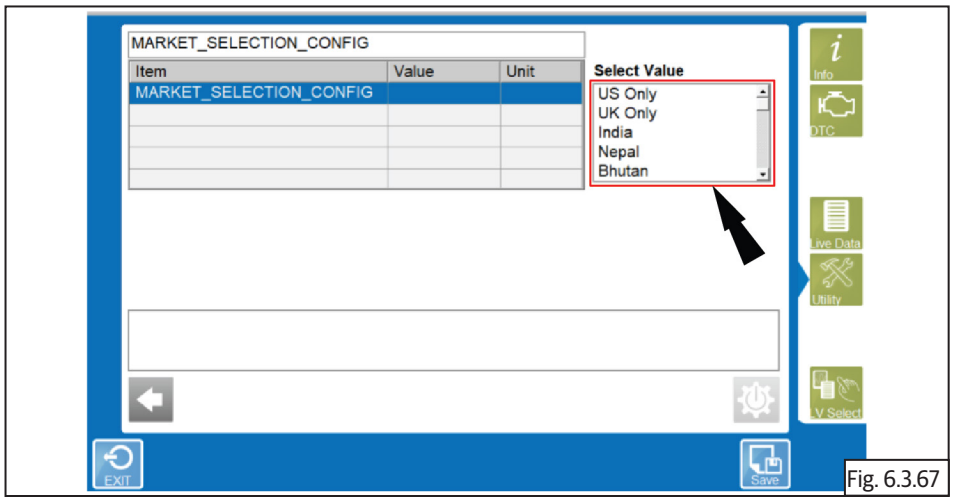

Fig. 6.3.67

- Select the country based on market spec of the vehicle by pressing the select value.
- **For eg**: If we select UK only, the unit will change to miles as shown below.

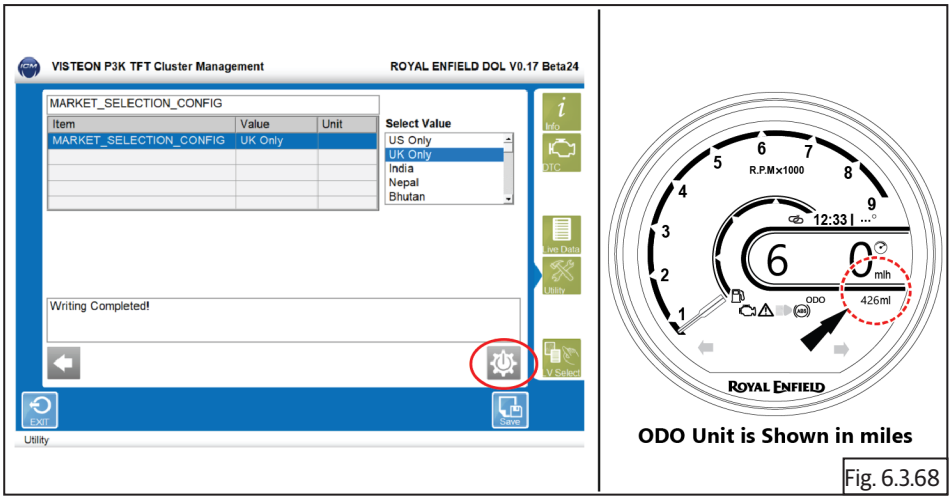

Fig. 6.3.68

- Press the settings icon in the encircled area. After selecting the country, it will run the selection process and once it is done, completed text will be displayed. Then do one ignition transition.

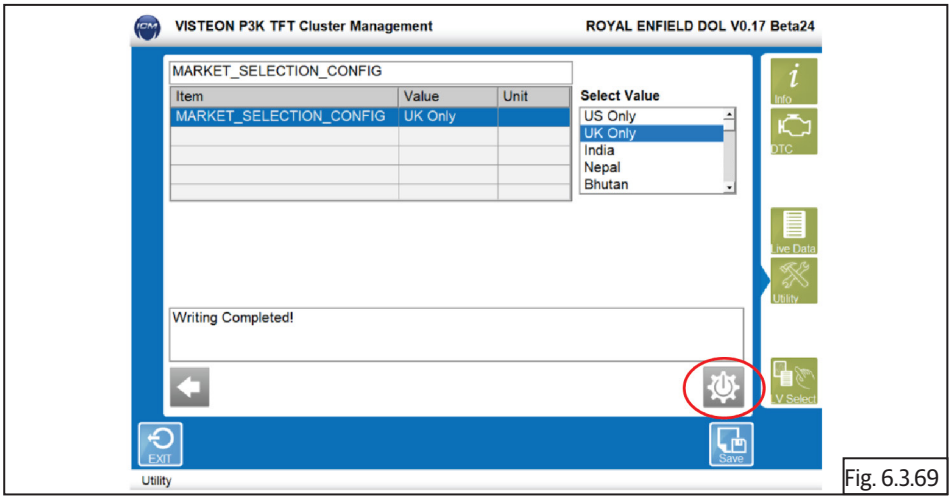

Fig. 6.3.69

- Then after ignition ON you will notice the odometer unit or speedo (mph) is changed to miles.
- Likewise we can configure the country based on the market selection on vehicle in the tripper dash.

12.3. Countries, units & second service reminders:

Some examples with countries, units & second service remainders **(for reference)**.

1. Germany

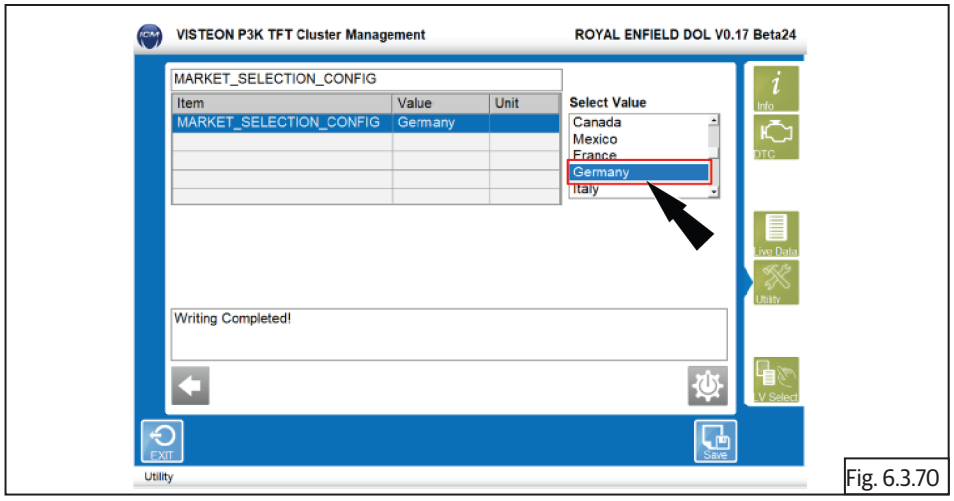

Fig. 6.3.70

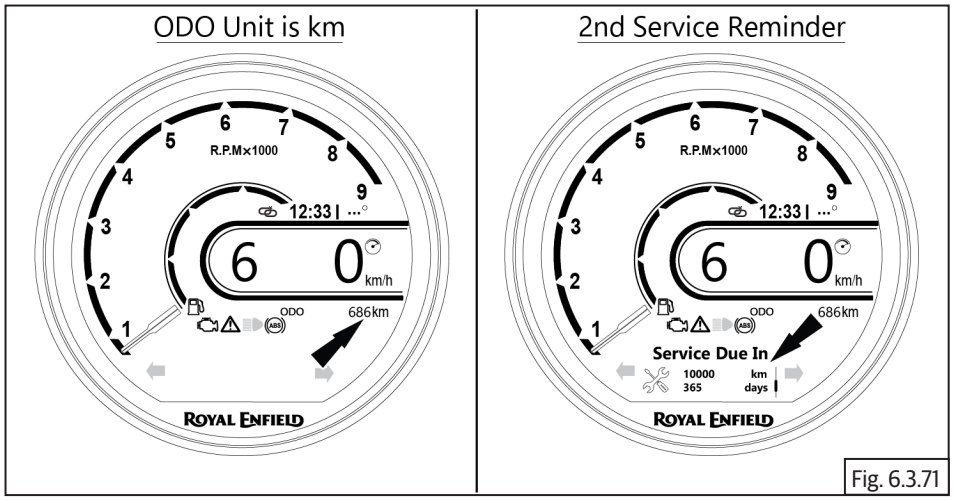

Fig. 6.3.71

- Service interval will be **7,500 kms** or **12 months (Whichever is earlier)**.

2. UK

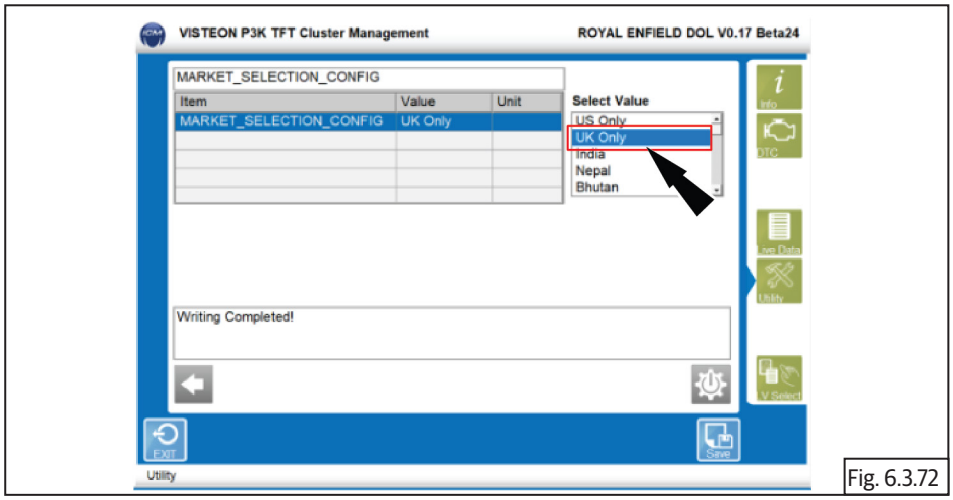

Fig. 6.3.72

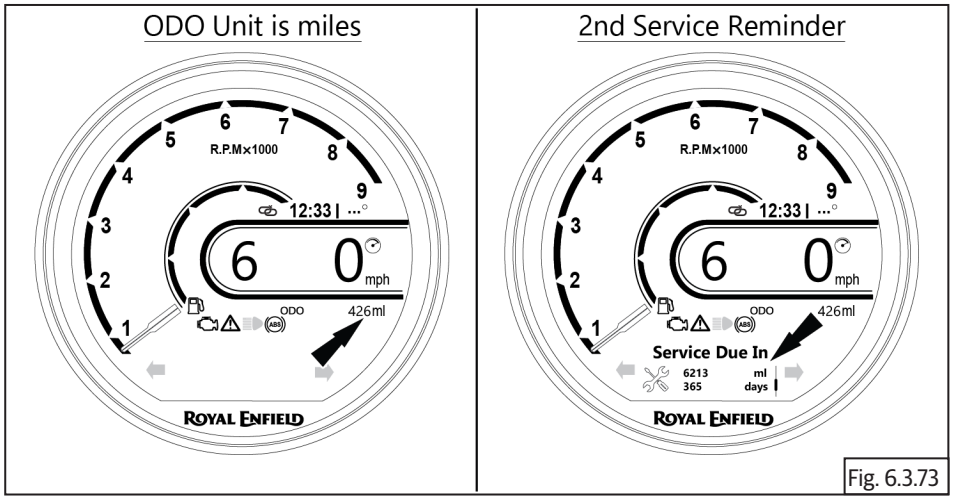

Fig. 6.3.73

- Service interval will be **4,660 miles** (equivalent to **7,500 kms**) or **12 months (Whichever is earlier)**.

3. US

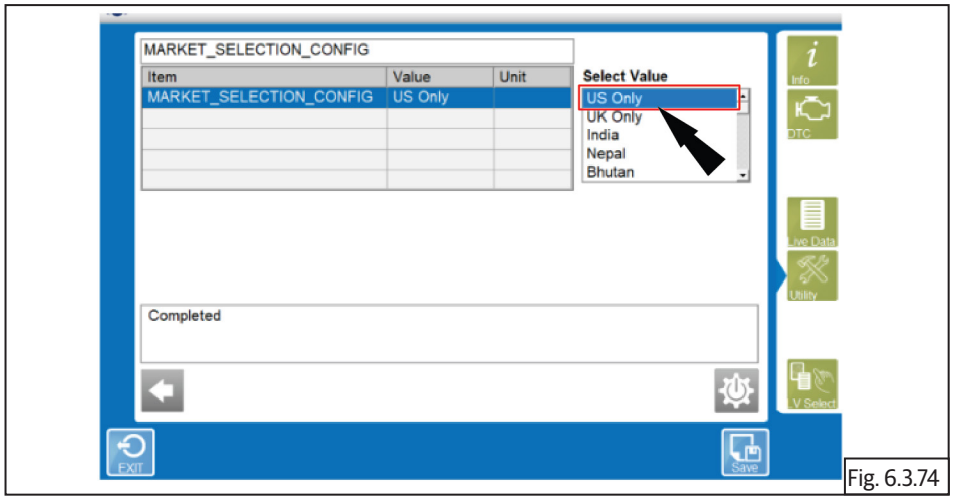

Fig. 6.3.74

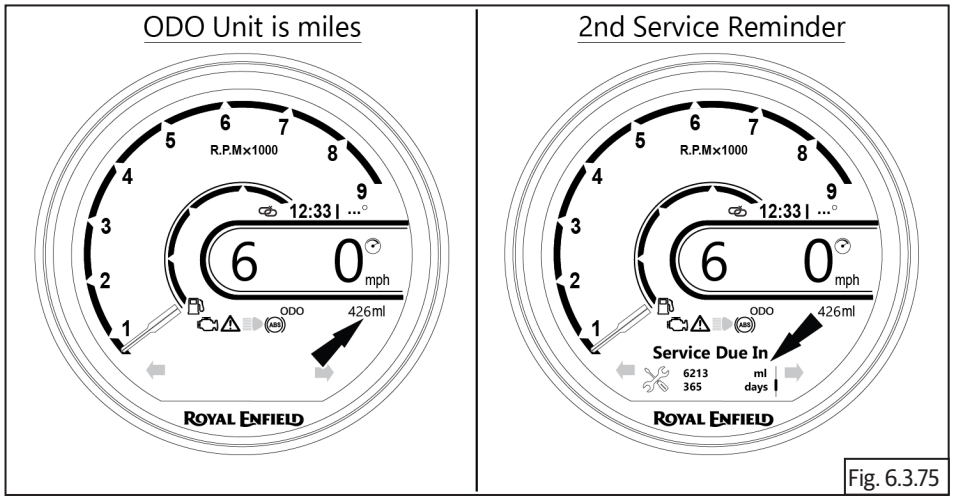

Fig. 6.3.75

- Service interval will be **3106 miles** (equivalent to **5000 kms**) or **6 months (Whichever is earlier)**.

Note
As of now only for UK/US and Europe markets service interval is configured to **7500 kms** or **12 months (Whichever is earlier)**.
If Cluster is changed at dealer end, VIN no needs to be written on to it. For VIN No update needs to contact the RE Team.

INDEX

A

ABS toner wheel

Adjuster nut

Air Filter Box Assembly

Air Filter Element

B

Balancer Shaft

Battery

Bearing

Brake lamp switch

Brake pedal

Breather Hose

C

Camshaft

Center Stand

Chain adjusters

Chain drive sprocket

Clevis pin

Clutch

Clutch Cable

Clutch Cable

Clutch Cover

Connecting Rod

Control Cables

Countershaft

Cradle Assembly LH

Cradle Assembly RH

Crankshaft

Cylinder Barrel

Cylinder Head

Cylinder Head Cover

D

Drain Hose

Drain Plug

Drive chain

Drive chain

Driveshaft

E

E-clip

Engine

Engine Oil

Engine Troubleshooting

EVAP

Exhaust Pipes and Silencers

F

FD Sprocket

Footrests

Fork Assembly

Frame Adjuster

Front Brake Disc

Front Mudguard

Front Number Plate

Front Wheel

Fuel Filter

Fuel Float

Fuel Tank

G

Gear Position Indicator Sensor

Gear Shift Linkage

Grab Handle

H

Handlebar

Handlebar brace

Handlebar riser

Headlamp

Heel guard

I

IAT sensor

Idle Speed Controller (ISC)

Ignition switch

Injector

Inlet Manifold Rubber Flange

J

Journal Bearing

L

Lever Eyelet

LH Cylinder Rocker Carrier

Limiter pad

Lower Crankcase

Lubrication

M

Magneto Cover

Magneto Rotor

Manifold Absolute Pressure (MAP) Sensor

Master cylinder assembly

Mudflap

O

Oil Cooler Inlet and Outlet Pipes

Oil Filter

Oil Jet

Oil Pan

Oil Pressure Switch

Oil Pump

P

Piston

Piston Ring

R

Rear Brake Disc

Rear Mudguard

Rear Mudguard Infill Cover

Rear Number Plate

Rear view mirror

Rear Wheel

Reed Valves

RH Cylinder Rocker Carrier

Rider Seat

S

Saree Guard

Seat Assembly

Sensors

Shifter Drum

Shifter fork

Shifter Shaft

Shock absorber

Side Panels

Side Stand

Spark Plug

Spark Plug Suppressor Caps

Starter Motor

Steering Stem

Swing Arm

Switch module

T

Tappet Adjusters

Throttle Body

Throttle Cable

Throttle Position Sensor (TPS)

Throttle rotor housing

Timing Chain Tensioner

Toner wheel

Top Yoke - Continental GT

U

Upper Crankcase

V

Valve

W

Wheel hub

Wheel speed sensor assembly

Wheels

GLOSSARY

13.2 Glossary

Aggregates	Description
ACV	Air Cut Valve
ABS	Anti-lock braking system
B+	Battery positive
BDC	Bottom dead center
BRG	Bearing
°C	Celsius (Centigrade)
CAL	Calibration
CC	Cubic centimeters
Cm	Centimeters
CKP	Crankshaft position
DTC	Diagnostic trouble code
DOT	Department of Transportation
DMS	Dealer management system
ECM	Engine control module
ET	Engine temperature
ECU	Electronic Control Unit
EMS	Engine Management System
EFI	Electronic fuel injection
EVAP	Evaporative emissions
FI	Fuel injection
ft-lbs	Foot pounds
FD	Final Drive
gal	gallon

Aggregates	Description
GPS	Gear Position Sensor
HO2S	Heated oxygen sensor
hp	Horsepower
Hego	Heated Exhaut Gas Oxygen
HT cable	High tension cable
hr	Hour
IAC	Idle air control
IAT	Intake air temperature
IC	Instrument cluster
ID	Inside diameter
IGN	Ignition
in-lbs	Inch pounds
kg	Kilogram
km	Kilometer
km/h	Kilometers per hour
kW	Kilowatt
L	Litre
lbs	Pounds
LCD	Liquid crystal display
LH	Lefthand
MAP	Manifold absolute pressure
max	Maximum
mi	Miles

Aggregates	Description
min	Minimum
mm	Millimeter
mph	Miles per hour
Nm	Newton-meter
N/A	Not applicable
NRB	Needle Roller Bearing
O2	Oxygen
OD	Outside diameter
OEM	Original equipment manufacturer
P&A	Parts and Accessories
PAV	Pulse Air Valve
psi	Pounds per square inch
PWM signal	Pulse width modulated
qt	Quart
R	Resistence
RR	Regulator and Rectifier
RLY	Relay (Electrical)
RES	Reserve mark on fuel supply
RH	Righthand
RPM	Revolutions per minute
S	seconds
SPL	Special Tool

Aggregates	Description
SOHC	Single Over Head Cam
TB	Throttle Body
TDC	Top dead center
TWI	Tyre wear indicator
TPS	Throttle position sensor
TS	Turn signal
VAC	Volts of alternating current
VDC	Volts of direct current
VIN	Vehicle identification number
VSS	Vehicle speed sensor
W	Watt
WSS	Wheel speed sensor



Edition:

ROYALENFIELD.COM